CENTURY®

LEGENDARY LEADERSHIP

OWNER'S MANUAL

SERIES 12 LCG CARRIERS GENERATION II

INSTALLATION, OPERATION, MAINTENANCE & PARTS

NOTE: MANUAL including SPECIFICATIONS, subject to change without notice
All ratings specified are based on structural factors only,
not vehicle capacities or capabilities.

CENTURY®
Miller Industries PA Carrier Division.
2577 Kirila Dr.
Hermitage, PA 16148

FORM NO. 0540025
REV. 10/2024
PRICE $25.00

Section V - PARTS

This Section is provided by the manufacturer for the purpose of ordering any component part of the **Series 12 GEN II Carrier** that may be required when part replacement is necessary. Be certain to use only original equipment replacement parts for warranty purposes as well as for keeping your **Series 12 GEN II Carrier** in its original state and optimum operating capacities.

When ordering replacement or spare parts be sure to provide the following information to your carrier manufacturer authorized representative.

1. **Manual Number & Date of Publication**
2. **Manual Page Number**
3. **Page Title**
4. **Reference Number of Part Desired**
5. **Part Number**
6. **Part Description**
7. **Quantity of Part Desired**

Providing this information will help ensure that the correct parts will be delivered to you in an expedient manner without delay. Should additional information be required for repair or replacement of certain components, contact your **MILLER INDUSTRIES DISTRIBUTOR.**

The Manufacturer reserves the right, without notice or obligation, to improve or modify their products, which may change the specifications, models and feature availability.

ALUMINUM BED ASSEMBLY

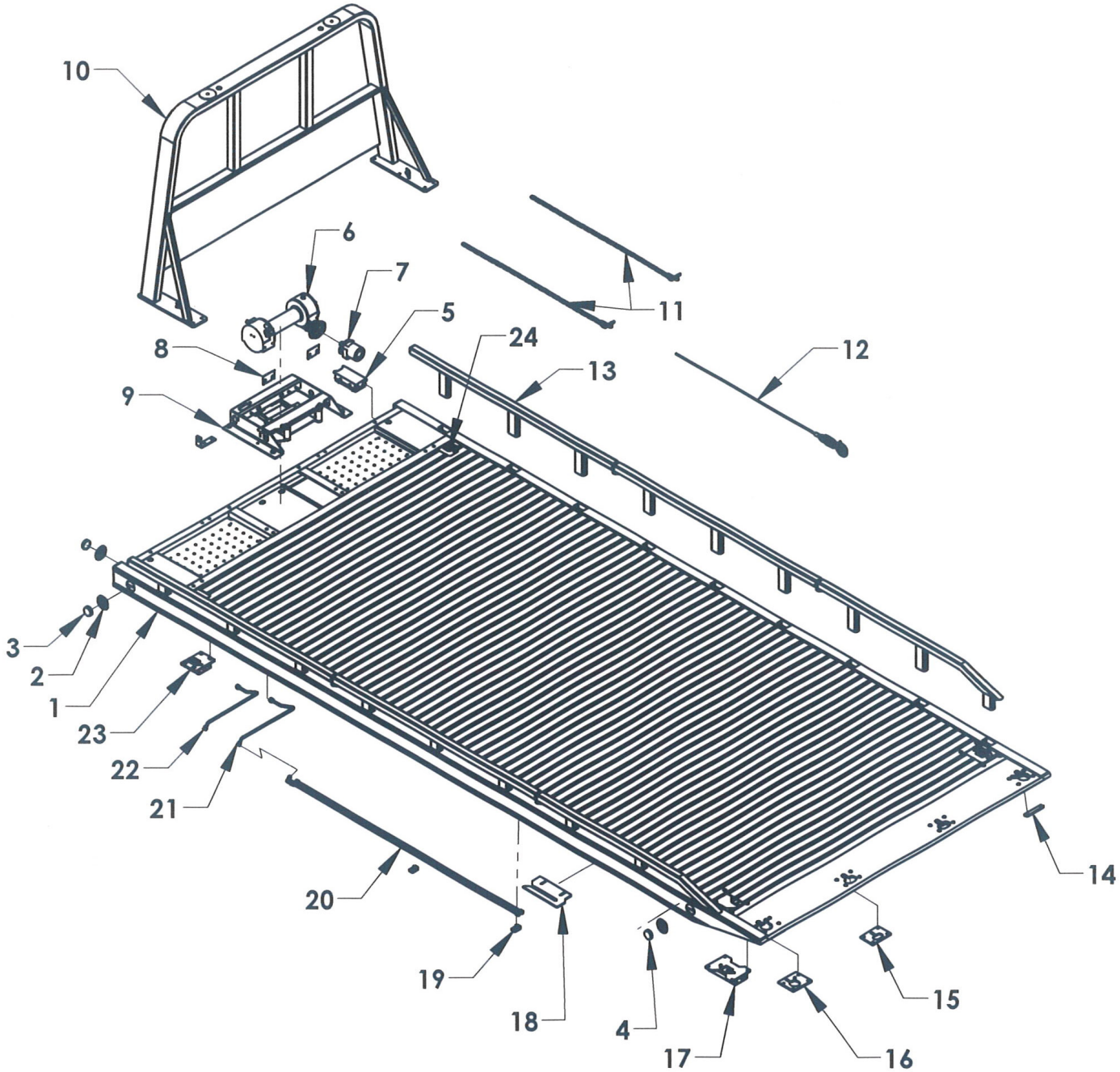

ALUMINUM BED ASSEMBLY GEN II
REMOVABLE RAIL

REF. NO.	QTY	PART NUMBER	DESCRIPTION
1	1	301812L3CCT102-XXX	SERIES 12 G3 AL BED WELDMENT
			XXX= 205, 210, 215, 220
2	6	0311516	2-1/2" MARKER LIGHT GROMMET
3	4	0311513	2-1/2" AMBER MARKER LIGHT
4	2	0311512	2-1/2" RED MARKER LIGHT
5	1	0303385	10 POST JUNCTION BOX
6	1	0308698	RAMSEY 8000 LB WORM GEAR WINCH
7	1	0320147	RAMSEY WINCH MOTOR 5 CUBIC INCH
8	2	0701172	SPACER WINCH BRACKET
9	1	0940425	WINCH MOUNTING FRAME
10	1	0809558-XX	CAB PROTECTOR
			XX= 38, 45, 48, 50, 52, 54, 57, 60, 62, 64, 68
11	2	0302493	FRONT SAFETY CHAIN ASSEMBLY 5/16 x 8'
12	1	0301669	WINCH CABLE ASSEMBLY
13	1	09009171-XXX	REMOVABLE TUBE RAIL (SEE CHART)
14	2	07004889	APPROACH SKID PLATE
15	2	34521	ALUM APPROACH PLATE CHAINLOCK
16	2	07007442	ALUM APPROACH PLATE CHAINLOCK - 2 WAY
17	X	08001669	CHAINLOCK - SIDE CHAIN BINDER
18	1	33813	ANTI-TILT PLATE
19	2	0751188	FLUID TUBE MOUNTING BLOCK - LOWER
20	2	383S1-XXX	SERIES 10/12/16 UNDER BODY FLUID TUBE
			XXX= 205, 210, 215, 220
21	1	0751975-R	WINCH MOTOR FLUID TUBE-S12 G2-RAMSEY-LONG
22	1	0751974-R	WINCH MOTOR FLUID TUBE-S12 G2-RAMSEY-SHORT
23	1	08004844L	CHAINLOCK-FRONT CHAIN BINDER - LH
24	1	08004844R	CHAINLOCK-FRONT CHAIN BINDER - RH

REMOVABLE TUBE RAIL SIDES

ASSEMBLY #	BED LENGTH	REMOVABLE TUBE RAIL SIDE COMBINATIONS
09009171-190	19 TO 20.5 FT	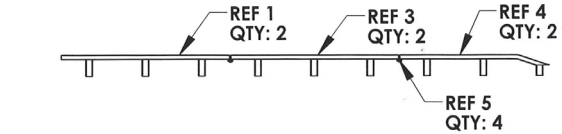
09009171-210	21 TO 22 FT	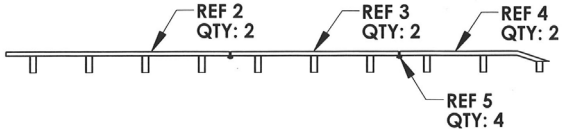

REF	PART #	DESCRIPTION	QTY
1	346071F	FRONT REMOVABLE TUBE RAIL - 3 POST	SEE CHART
2	346095F	FRONT REMOVABLE TUBE RAIL - 4 POST	SEE CHART
3	346071M	MIDDLE REMOVABLE TUBE RAIL - 3 POST	SEE CHART
4	346064	REAR REMOVABLE TUBE RAIL - 3 POST	SEE CHART
5	0306070	LYNCH PIN - 7/16 x 1-3/4 IN.	SEE CHART

STEEL BED ASSEMBLY GEN II
REMOVABLE TUBE RAIL

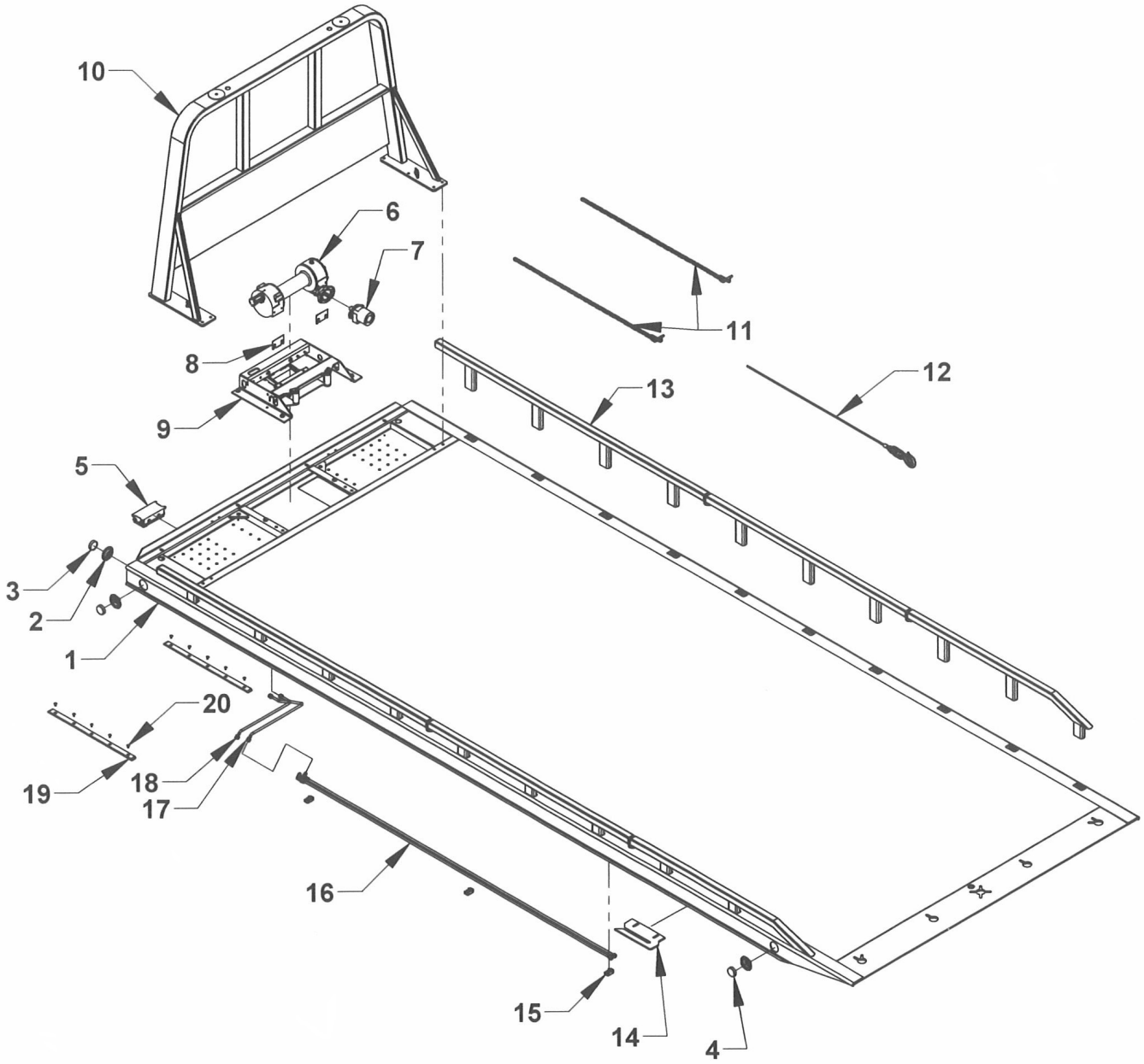

STEEL BED ASSEMBLY GEN II
REMOVABLE TUBE RAIL

REF. NO.	QTY	PART NUMBER	DESCRIPTION
1	1	30284122XXX	SERIES 12 G2 ST BED WELDMENT XXX= 205, 210, 215, 220
2	6	0311516	2-1/2" MARKER LIGHT GROMMET
3	4	0311513	2-1/2" AMBER MARKER LIGHT
4	2	0311512	2-1/2" RED MARKER LIGHT
5	1	0303385	10 POST JUNCTION BOX
6	1	0308698	RAMSEY 8000 LB WORM GEAR WINCH
7	1	0320147	RAMSEY WINCH MOTOR 5 CUBIC INCH
8	2	0701172	SPACER WINCH BRACKET
9	1	0940425	WINCH MOUNTING FRAME
10	1	0809558-XX	CAB PROTECTOR XX= 38, 45, 48, 50, 52, 54, 57, 60, 62, 64, 68
11	2	0302493	FRONT SAFETY CHAIN ASSEMBLY 5/16 x 8'
12	1	0301669	WINCH CABLE ASSEMBLY
13	1	09009171-XXX	REMOVABLE TUBE RAIL (SEE CHART)
14	1	33813	ANTI-TILT PLATE
15	3	0751188	FLUID TUBE MOUNTING BLOCK - LOWER
16	2	383S1-XXX	SERIES 10/12/16 UNDER BODY FLUID TUBE XXX=205, 210, 215, 220
17	1	0751975-R	WINCH MOTOR FLUID TUBE-S12 G2-RAMSEY-LONG
18	1	0751974-R	WINCH MOTOR FLUID TUBE-S12 G2-RAMSEY-SHORT
19	2	07005597	I-BEAM WEAR PAD
20	10	04000844	FHSCS 5/16-18 x 5/8 ZP

REMOVABLE BLADE RAIL SIDES

ASSEM #	BED LENGTH	REMOVABLE BLADE RAIL SIDE COMBINATIONS
34B175	17.5 FT	1, 8, 10
34B180	18.0 FT	2, 8, 10
34B185	18.5 FT	3, 8, 10
34B190	19.0 FT	4, 8, 10
34B195	19.5 FT	5, 8, 10
34B200	20.0 FT	6, 8, 10
34B205	20.5 FT	7, 8, 10
34B210	21.0 FT	4, 9, 10
34B215	21.5 FT	5, 9, 10
34B220	22.0 FT	6, 9, 10

REF	PART #	DESCRIPTION	QTY
1	34B060FL & R	FRONT REMOVABLE BLADE RAIL - 2 POST	SEE CHART
2	34B066FL & R	FRONT REMOVABLE BLADE RAIL - 2 POST	SEE CHART
3	34B072FL & R	FRONT REMOVABLE BLADE RAIL - 2 POST	SEE CHART
4	34B078FL & R	FRONT REMOVABLE BLADE RAIL - 3 POST	SEE CHART
5	34B084FL & R	FRONT REMOVABLE BLADE RAIL - 3 POST	SEE CHART
6	34B090FL & R	FRONT REMOVABLE BLADE RAIL - 3 POST	SEE CHART
7	34B096FL & R	FRONT REMOVABLE BLADE RAIL - 3 POST	SEE CHART
8	34B072ML & R	MIDDLE REMOVABLE BLADE RAIL - 3 POST	SEE CHART
9	34B096ML & R	MIDDLE REMOVABLE BLADE RAIL - 4 POST	SEE CHART
10	34B064RL & R	REAR REMOVABLE BLADE RAIL - 3 POST	SEE CHART

STEEL BED ASSEMBLY - BLADE SIDES
GEN 2 SERIES 12 RIGHT APPROACH

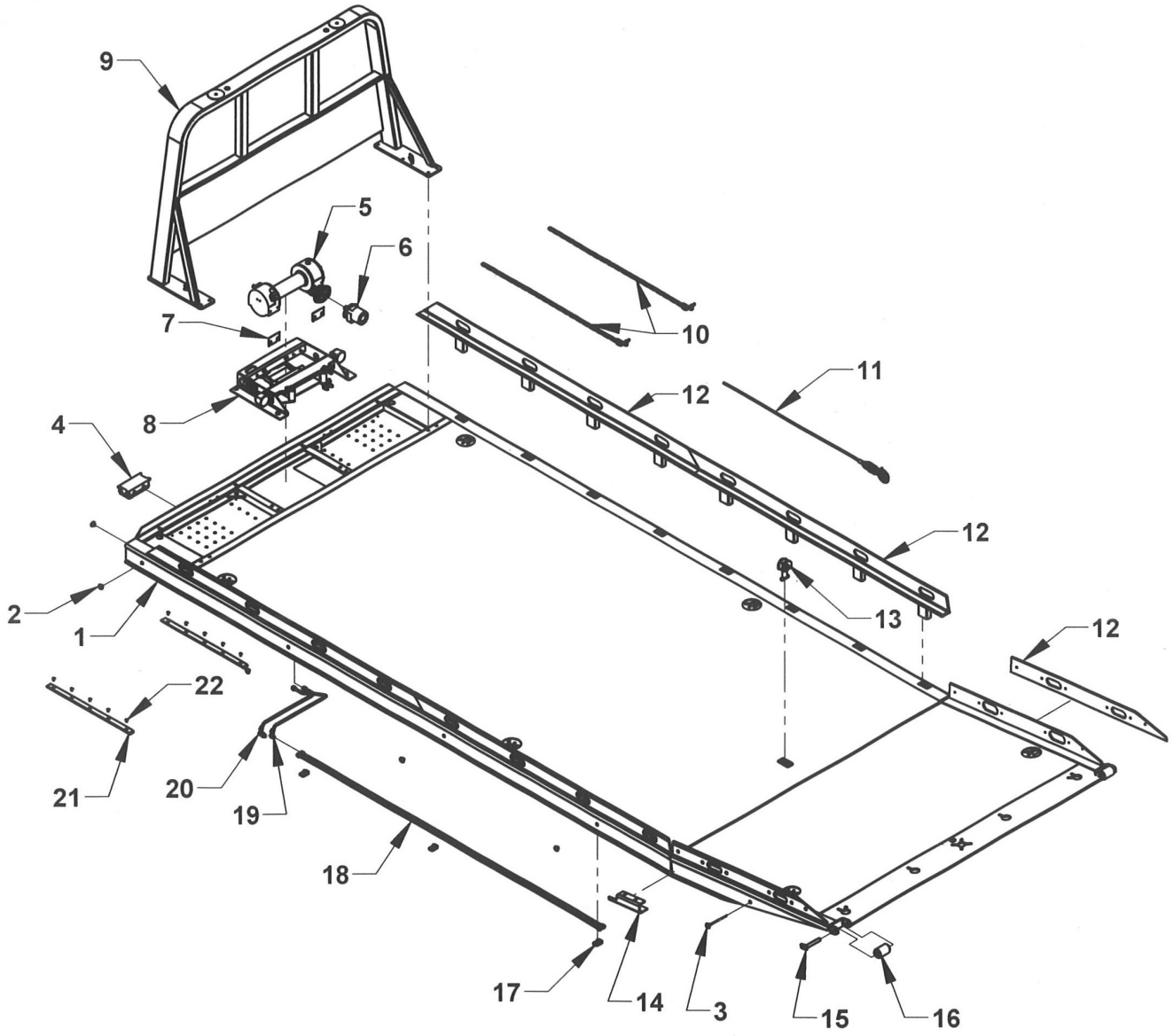

STEEL BED ASSEMBLY - BLADE SIDES
GEN 2 SERIES 12 RIGHT APPROACH

REF. NO.	. QTY	PART NUMBER	DESCRIPTION
1	1	3028122RXXX	S12 G2 RA ST BED BLADE SIDES WELDMENT XXX = 205, 210, 215, 220
2	10	0311521	3/4" AMBER MARKER LIGHT W/GROMMET
3	2	0311522	3/4" RED MARKER LIGHT W/GROMMET
4	1	0303385	10 POST JUNCTION BOX
5	1	0308698	RAMSEY 8000 LB WORM GEAR
6	1	0320147	WINCH MOTOR 5 CUBIC INCH
7	2	0701172	SPACER, WINCH BRACKET
8	1	0940425	WINCH MOUNTING FRAME
9	1	0809558-XX	CAB PROTECTOR XX = 38, 45, 48, 50, 52, 54, 57, 60, 62, 64
10	2	0302493	FRONT SAFETY CHAIN ASSEMBLY - 5/16 x 8'
11	1	0301669	WINCH CABLE ASSEMBLY
12	1	09001210-XXX	RIGHT APPROACH BLADE RAIL SIDES XXX= 205, 210, 215, 220
13	1	0805324	CABLE GUIDE WELDMENT (HOOK STYLE)
14	1	0750465	ANTI-TILT PLATE RA
15	2	0806252	ROLLER TIP WHEEL KEEPER PIN
16	2	0721483	ROLLER
17	3	0751188	FLUID TUBE MOUNTING BLOCK-LOWER
18	2	383S1-XXX	SERIES 10/12/16 UNDER BODY FLUID TUBE XXX = 205, 210, 215, 220
19	1	0751975-R	WINCH MOTOR FLUID TUBE-S12 G2-RAMSEY-LONG
20	1	0751974-R	WINCH MOTOR FLUID TUBE-S12 G2-RAMSEY-SHORT
21	2	07005597	I-BEAM WEAR PAD
22	10	04000844	FHSCS 5/16-18 x 5/8 ZP

RIGHT APPROACH REMOVABLE BLADE RAIL SIDES

ASSEMBLY #	BED LENGTH	REMOVABLE BLADE RAIL SIDE COMBINATIONS
09001210-190	19.0 FT	1 8 9
09001210-195	19.5 FT	2 8 9
09001210-200	20.0 FT	3 8 9
09001210-205	20.5 FT	4 8 9
09001210-210	21.0 FT	5 8 9
09001210-215	21.5 FT	6 8 9
09001210-220	22.0 FT	7 8 9

REF	PART #	DESCRIPTION	QTY
1	08001089-190L & R	RA FRONT REMOVABLE BLADE RAIL - 3 POST	SEE CHART
2	08001089-195L & R	RA FRONT REMOVABLE BLADE RAIL - 3 POST	SEE CHART
3	08001089-200L & R	RA FRONT REMOVABLE BLADE RAIL - 3 POST	SEE CHART
4	08001089-205L & R	RA FRONT REMOVABLE BLADE RAIL - 4 POST	SEE CHART
5	08001089-210L & R	RA FRONT REMOVABLE BLADE RAIL - 4 POST	SEE CHART
6	08001089-215L & R	RA FRONT REMOVABLE BLADE RAIL - 4 POST	SEE CHART
7	08001089-220L & R	RA FRONT REMOVABLE BLADE RAIL - 4 POST	SEE CHART
8	0809192L & R	RA MIDDLE REMOVABLE BLADE RAIL - 4 POST	SEE CHART
9	0751006L & R	RA REAR REMOVABLE BLADE RAIL	SEE CHART

STEEL BED ASSEMBLY
GEN 2 SERIES 12 RIGHT APPROACH TUBE SIDES

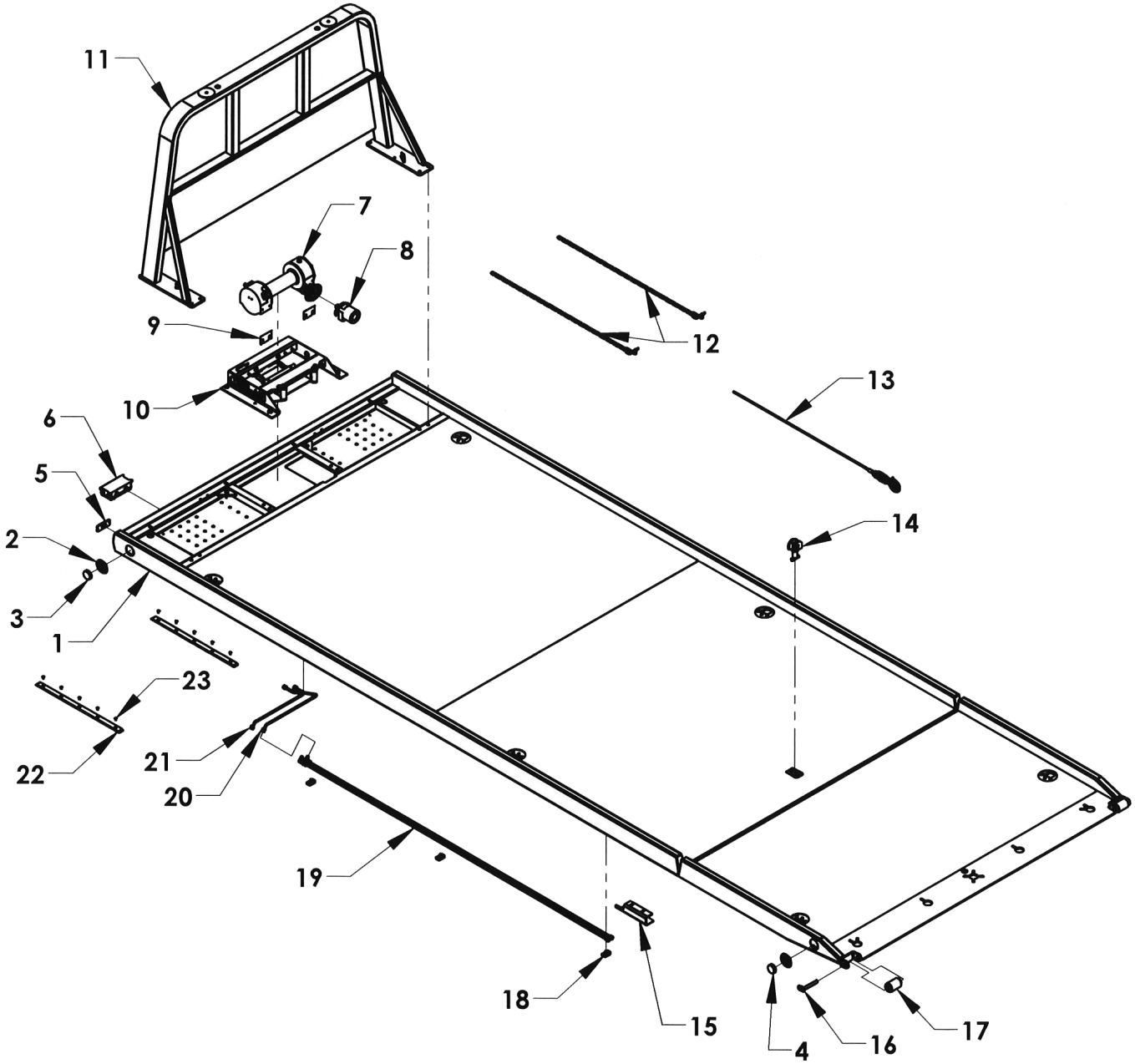

STEEL BED ASSEMBLY
GEN 2 SERIES 12 RIGHT APPROACH TUBE SIDES

REF. NO.	PART #	QTY	DESCRIPTION
1	3028122RXXX-TX	1	S12 G2 ST SST TUBE SIDE BED WELDMENT XXX = 205, 210, 215, 220
2	0311516	4	2-1/2" AMBER MARKER GROMMET
3	0311513	2	2-1/2" AMBER MARKER LIGHT
4	0311512	2	2-1/2" RED MARKER LIGHT
5	0308360	2	RECTANGULAR AMBER REFLECTIVE LIGHT 4.375 x 1.5
6	0303385	1	10 POST JUNCTION BOX
7	0308698	1	RAMSEY 8000 LB WORM GEAR
8	0320147	1	WINCH MOTOR 5 CUBIC INCH
9	0701172	2	SPACER, WINCH BRACKET
10	0940425	1	WINCH MOUNTING FRAME
11	0809558-XX	1	CAB PROTECTOR XX = 48, 50, 52, 54, 57, 60, 62, 64, 68
12	0302493	2	FRONT SAFETY CHAIN ASSEMBLY - 5/16 x 8'
13	0301669	1	WINCH CABLE ASSEMBLY
14	0805324	1	CABLE GUIDE WELDMENT (HOOK STYLE)
15	0750465	1	ANTI-TILT PLATE
16	0806252	2	ROLLER TIP WHEEL KEEPER PIN
17	0721483	2	ROLLER
18	0751188	3	FLUID TUBE MOUNTING BLOCK-LOWER
19	383S1-XXX	2	SERIES 10/12/16 UNDER BODY FLUID TUBE XXX = 205, 210, 215, 220
20	0751975-R	1	WINCH MOTOR FLUID TUBE-S12 G2-RAMSEY-LONG
21	0751974-R	1	WINCH MOTOR FLUID TUBE-S12 G2-RAMSEY-SHORT
22	07005597	2	I-BEAM WEAR PAD
23	04000844	10	FHSCS 5/16-18 x 5/8 ZP

STEEL BED ASSEMBLY
GEN 2 SERIES 12 SST BLADE SIDES

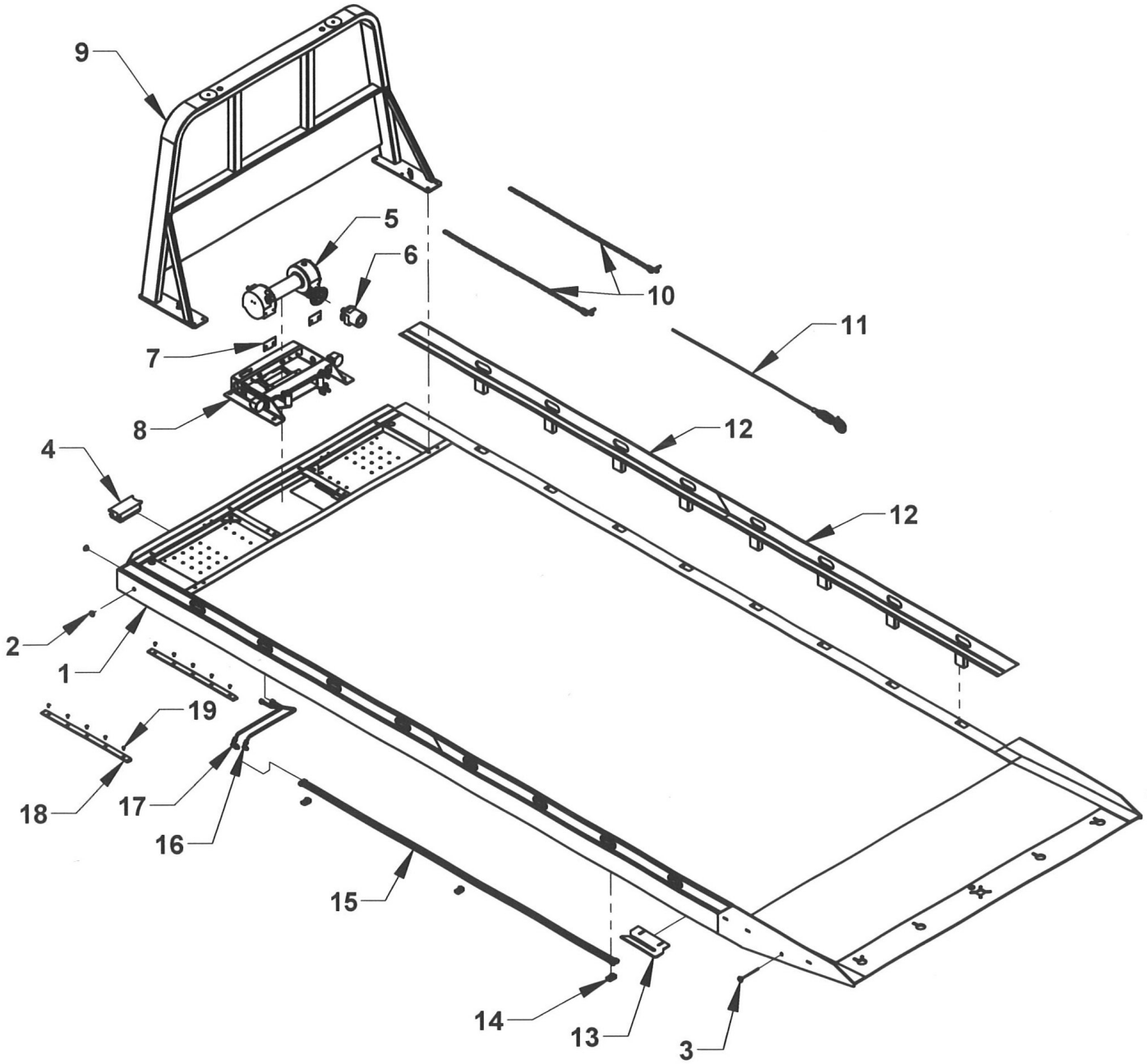

STEEL BED ASSEMBLY
GEN 2 SERIES 12 SST BLADE RAIL SIDES

REF. NO.	PART #	QTY	DESCRIPTION
1	3028412LSXXX	1	S12 G2 SST BLADE RAIL SIDE BED WELDMENT XXX = 205, 210, 215, 220
2	0311521	4	3/4" AMBER MARKER LIGHT W/GROMMET
3	0311522	2	3/4" RED MARKER LIGHT W/GROMMET
4	0303385	1	10 POST JUNCTION BOX
5	0308698	1	RAMSEY 8000 LB WORM GEAR
6	0320147	1	WINCH MOTOR 5 CUBIC INCH
7	0701172	1	SPACER, WINCH BRACKET
8	0940425	1	WINCH MOUNTING FRAME
9	0809558-XX	1	CAB PROTECTOR XX = 38, 45, 48, 50, 52, 54, 57, 60, 62, 64
10	0302493	2	FRONT SAFETY CHAIN ASSEMBLY - 5/16 x 8'
11	0301669	1	WINCH CABLE ASSEMBLY
12	0909446-XXX	1	SST BLADE RAIL SIDES XXX = 205, 210, 215, 220
13	33813	1	ANTI-TILT PLATE
14	0751188	3	FLUID TUBE MOUNTING BLOCK-LOWER
15	383S1-XXX	2	SERIES 10/12/16 UNDER BODY FLUID TUBE XXX = 205, 210, 215, 220
16	0751975-R	1	WINCH MOTOR FLUID TUBE-S12 G2-RAMSEY-LONG
17	0751974-R	1	WINCH MOTOR FLUID TUBE-S12 G2-RAMSEY-SHORT
18	07005597	2	I-BEAM WEAR PAD
19	04000844	10	FHSCS 5/16-18 x 5/8 ZP

SST REMOVABLE BLADE RAIL SIDES

ASSEMBLY #	BED LENGTH	REMOVABLE BLADE RAIL SIDE COMBINATIONS
0909446-190	19.0 FT	1, 7
0909446-195	19.5 FT	2, 7
0909446-200	20.0 FT	3, 7
0909446-205	20.5 FT	4, 7
0909446-210	21.0 FT	5, 7
0909446-215	21.5 FT	6, 7
0909446-220	22.0 FT	8, 9, 10

REF	PART #	QTY	DESCRIPTION
1	0809846-190L & R	SEE CHART	SST FRONT REMOVABLE BLADE RAIL - 3 POST
2	0809846-195L & R	SEE CHART	SST FRONT REMOVABLE BLADE RAIL - 4 POST
3	0809846-200L & R	SEE CHART	SST FRONT REMOVABLE BLADE RAIL - 4 POST
4	0809846-205L & R	SEE CHART	SST FRONT REMOVABLE BLADE RAIL - 4 POST
5	0809846-210L & R	SEE CHART	SST FRONT REMOVABLE BLADE RAIL - 4 POST
6	0809846-215L & R	SEE CHART	SST FRONT REMOVABLE BLADE RAIL - 4 POST
7	0809686L & R	SEE CHART	SST REAR REMOVABLE BLADE RAIL - 4 POST
8	0809846-220L & R	SEE CHART	SST FRONT REMOVABLE BLADE RAIL - 3 POST
9	0809195L & R	SEE CHART	SST MIDDLE REMOVABLE BLADE RAIL - 3 POST
10	0809770L & R	SEE CHART	SST REAR REMOVABLE BLADE RAIL - 3 POST

STEEL BED ASSEMBLY
GEN 2 SERIES 12 SST TUBE SIDES

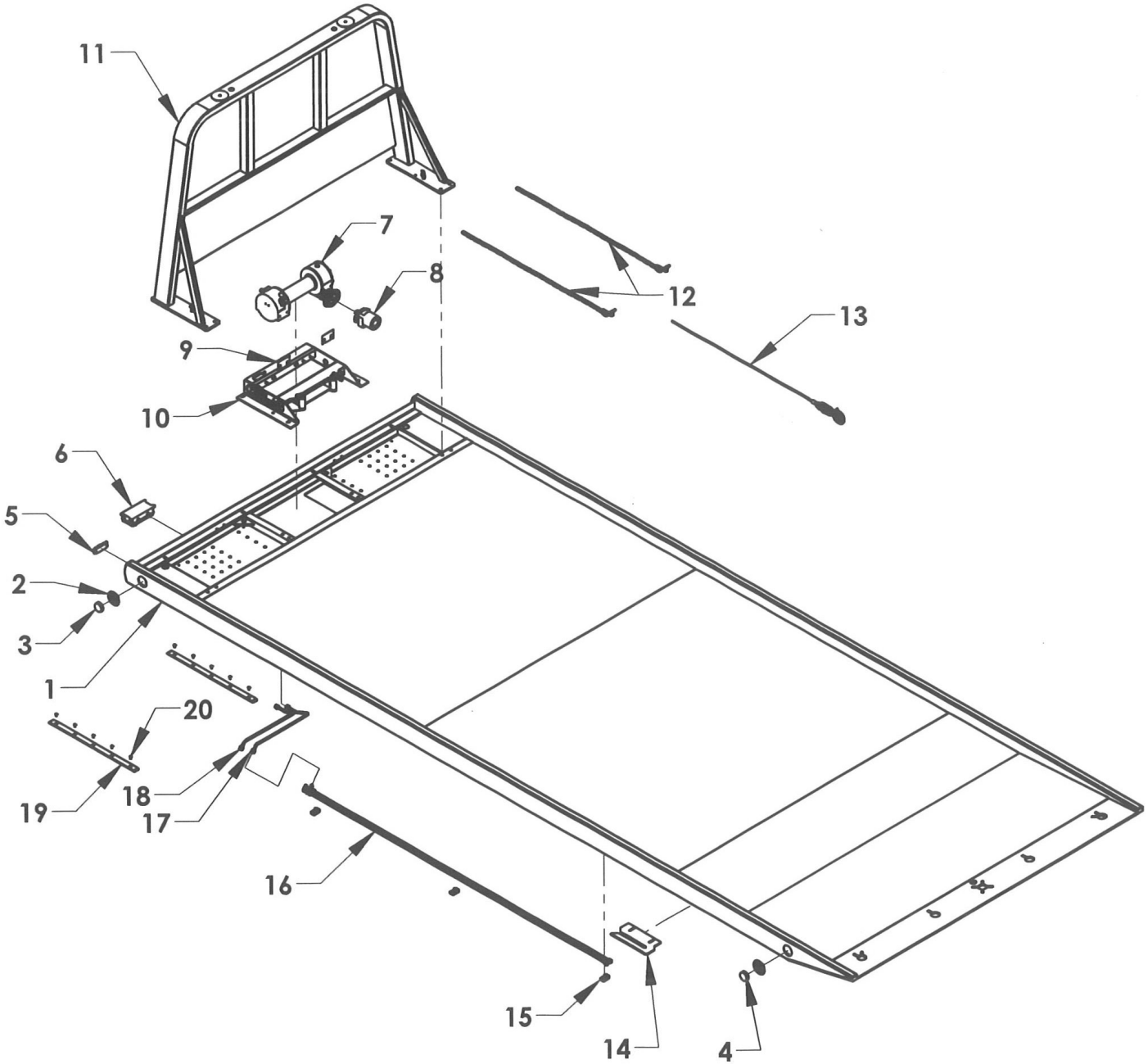

STEEL BED ASSEMBLY
GEN 2 SERIES 12 SST TUBE SIDES

REF. NO.	PART #	QTY	DESCRIPTION
1	30284122LSXXX-TX	1	S12 G2 ST SST TUBE SIDE BED WELDMENT
			XXX = 205, 210, 215, 220
2	0311516	4	2-1/2" AMBER MARKER GROMMET
3	0311513	2	2-1/2" AMBER MARKER LIGHT
4	0311512	2	2-1/2" RED MARKER LIGHT
5	0308360	2	RECTANGULAR AMBER REFLECTIVE LIGHT 4.375 x 1.5
6	0303385	1	10 POST JUNCTION BOX
7	0308698	1	RAMSEY 8000 LB WORM GEAR
8	0320147	1	WINCH MOTOR 5 CUBIC INCH
9	0701172	1	SPACER, WINCH BRACKET
10	0940425	1	WINCH MOUNTING FRAME
11	0809558-XX	1	CAB PROTECTOR
			XX = 48, 50, 52, 54, 57, 60, 62, 64, 68
12	0302493	2	FRONT SAFETY CHAIN ASSEMBLY - 5/16 x 8'
13	0301669	1	WINCH CABLE ASSEMBLY
14	33813	1	ANTI-TILT PLATE
15	0751188	3	FLUID TUBE MOUNTING BLOCK-LOWER
	383S1-XXX	2	SERIES 10/12/16 UNDER BODY FLUID TUBE
16			XXX = 205, 210, 215, 220
17	0751975-R	1	WINCH MOTOR FLUID TUBE-S12 G2-RAMSEY-LONG
18	0751974-R	1	WINCH MOTOR FLUID TUBE-S12 G2-RAMSEY-SHORT
19	07005597	2	I-BEAM WEAR PAD
20	04000844	10	FHSCS 5/16-18 x 5/8 ZP

12 SERIES LCG SUBFRAME COMPONENTS

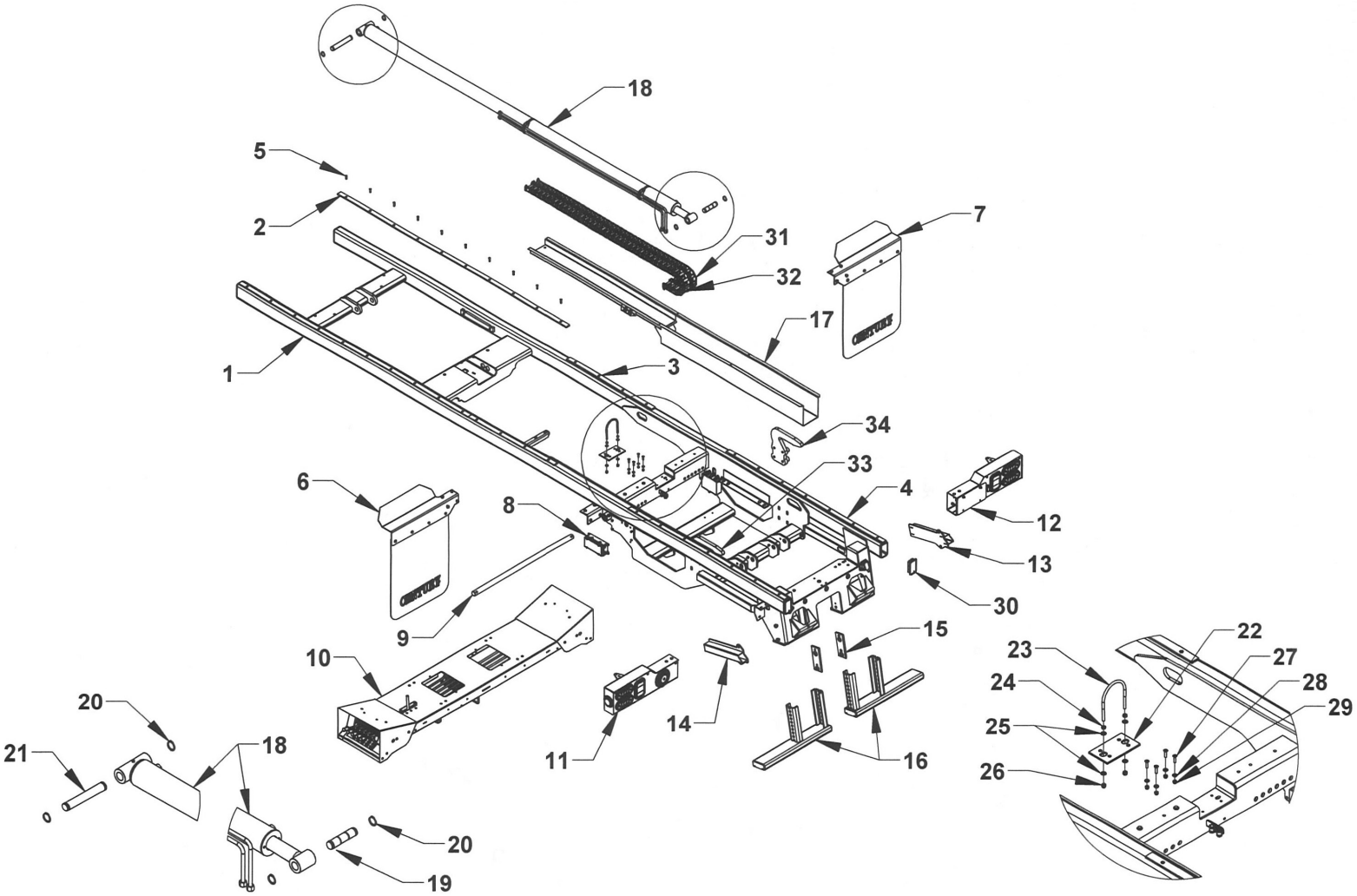

12 SERIES GEN 2 LCG SUBFRAME ASSEMBLY

REF NO.	NO REQ'D	PART NUMBER	DESCRIPTION
1	1	0809839	SERIES 12 G2 SUBFRAME WELDMENT
2	2	0308928-96	SUBFRAME BEARING PAD 5/16 x 1-1/2 x 96
3	2	0308928-36	SUBFRAME BEARING PAD 5/16 x 1-1/2 x 36
4	2	0308928-66N	NYLATRON SUBFRAME BEARING PAD 5/16 x 1-1/2 x 66
5	42	04000321	BOLT 5/16 -18 x 1-1/4 COUNTERSUNK TORX ST
6	1	0751024L	ALUM SPLASH GUARD LEFT REAR RIGHT FRONT
7	1	0751024R	ALUM SPLASH GUARD RIGHT REAR LEFT FRONT
8	1	0303385	10 POST JUNCTION BOX
9	1	0750952	S12 LCG HINGE PIN
10	1	183126	6-SPOOL CONTROL STATION
11	1	0940325L	CENTURY TAIL LIGHT HOUSING GROUP - LH
12	1	0940325R	CENTURY TAIL LIGHT HOUSING GROUP - RH
13	1	0809287R	L-ARM STORAGE TUBE SLIDE-IN 4K RH (STANDARD)
	1	160540R	L-ARM STORAGE TUBE SCOOP 4K RH (OPTIONAL)
	1	160535R	L-ARM STORAGE TUBE DROP-IN 4K RH (OPTIONAL)
14	1	0809287L	L-ARM STORAGE TUBE SLIDE-IN 4K LH (STANDARD)
	1	160540L	L-ARM STORAGE TUBE SCOOP 4K LH (OPTIONAL)
	1	160535L	L-ARM STORAGE TUBE DROP-IN 4K LH (OPTIONAL)
15	2	0750409	STABILIZER WHEEL LIFT GUIDE PAD
16	2	160525	STABILIZER EXTENSION STAND-LOW PROFILE
17	1	08098242	LCG DUAL BAY HOSE TRAY
18	1	72A35120	SLIDEBACK CYLINDER 3.5 BORE x 120 STROKE
19	1	32117	SLIDEBACK CYLINDER MOUNTING PIN 1.230
20	4	86125E	1-1/4 SNAP RING - EXTERNAL
21	1	13302010	S12 LCG SLIDEBACK CYLINDER MOUNTING PIN
22	1	0751223	LCG 12/16/20 S/B CYLINDER SUPPORT PAD
23	1	81286	U-BOLT 3/8-16 UNC
24	2	04001267	3/8-16 HEX NUT
25	4	0400480	3/8 FLAT WASHER
26	2	0400392	NYLON LOCK NUT 3/8-16 UNC
27	4	0403162	BOLT 5/16-18 UNC - ALLEN COUNTERSUNK
28	4	0400465	5/16 FLAT WASHER
29	4	0400382	NYLON LOCK NUT 5/16-18 UNC
30	2	0308748	5 x 3 x 5/16 SUBFRAME TUBE PLUG
31	1	09020735	IGUS 200.03.005 41 LINK TRACK AND BOLT KIT
32	1	09020734	IGUS 200.05.005 41 LINK TRACK AND BOLT KIT
33	1	0809759L	RIGHT APPROACH REAR BED-LOCK - LH
34	1	0809759R	RIGHT APPROACH REAR BED-LOCK - RH

IGUS TRACK AND BOLT KIT - 09020735
120" SLIDEBACK CYLINDER STROKE

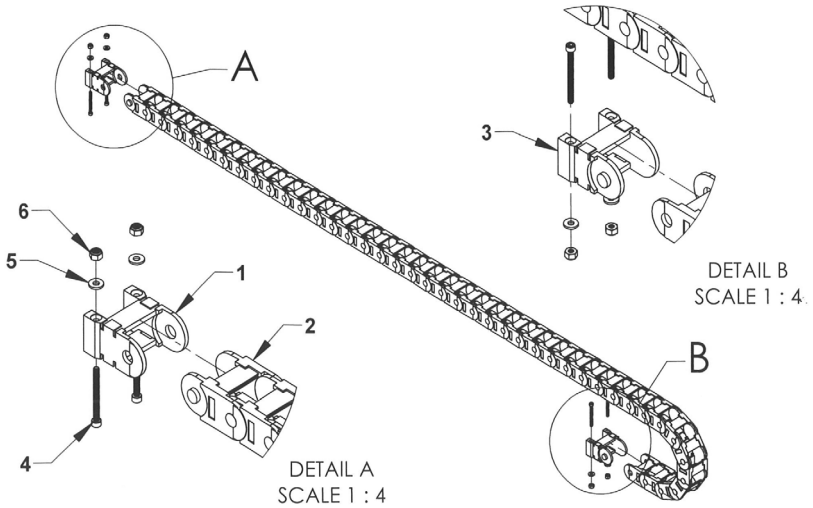

REF	PART #	QTY	DESCRIPTION
	09020735	1	IGUS 200.03.055 41 LINK TRACK & BOLT KIT
1	03017004	1	IGUS 2000.03.1 END LINK - FEMALE
2	03005615	45	IGUS 200.03.055 LINK
3	03017005	1	IGUS 2100.03.2 END LINK - MALE
4	0403165	4	BOLT SHCS #10-24 UNC x 2 ZP
5	0400450	4	FLAT WASHER #10 SAE ZP
6	0400358	4	NUT NYLOK #10-24 UNC ZP

IGUS TRACK AND BOLT KIT - 09020734
120" SLIDEBACK CYLINDER STROKE

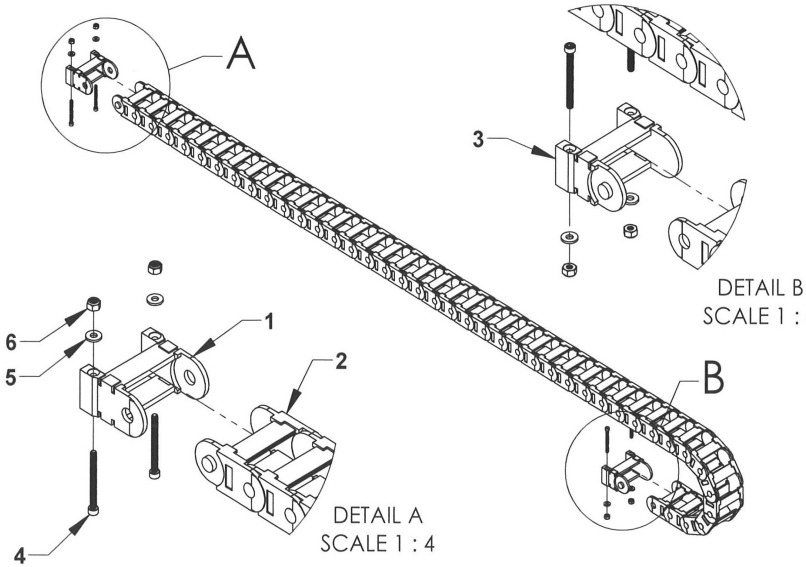

REF	QTY	PART #	DESCRIPTION
	1	09020734	IGUS 200.05.055 41 LINK TRACK & BOLT KIT
1	1	03017002	IGUS 2000.05.1 END LINK - FEMALE
2	41	03011188	IGUS 200.05.055 LINK
3	1	03017003	IGUS 2100.05.2 END LINK - MALE
4	4	0403165	BOLT SHCS #10-24 UNC x 2 ZP
5	4	0400450	FLAT WASHER #10 SAE ZP
6	4	0400358	NUT NYLOK #10-24 UNC ZP

12 SERIES LCG TAIL LIGHT COMPONENTS

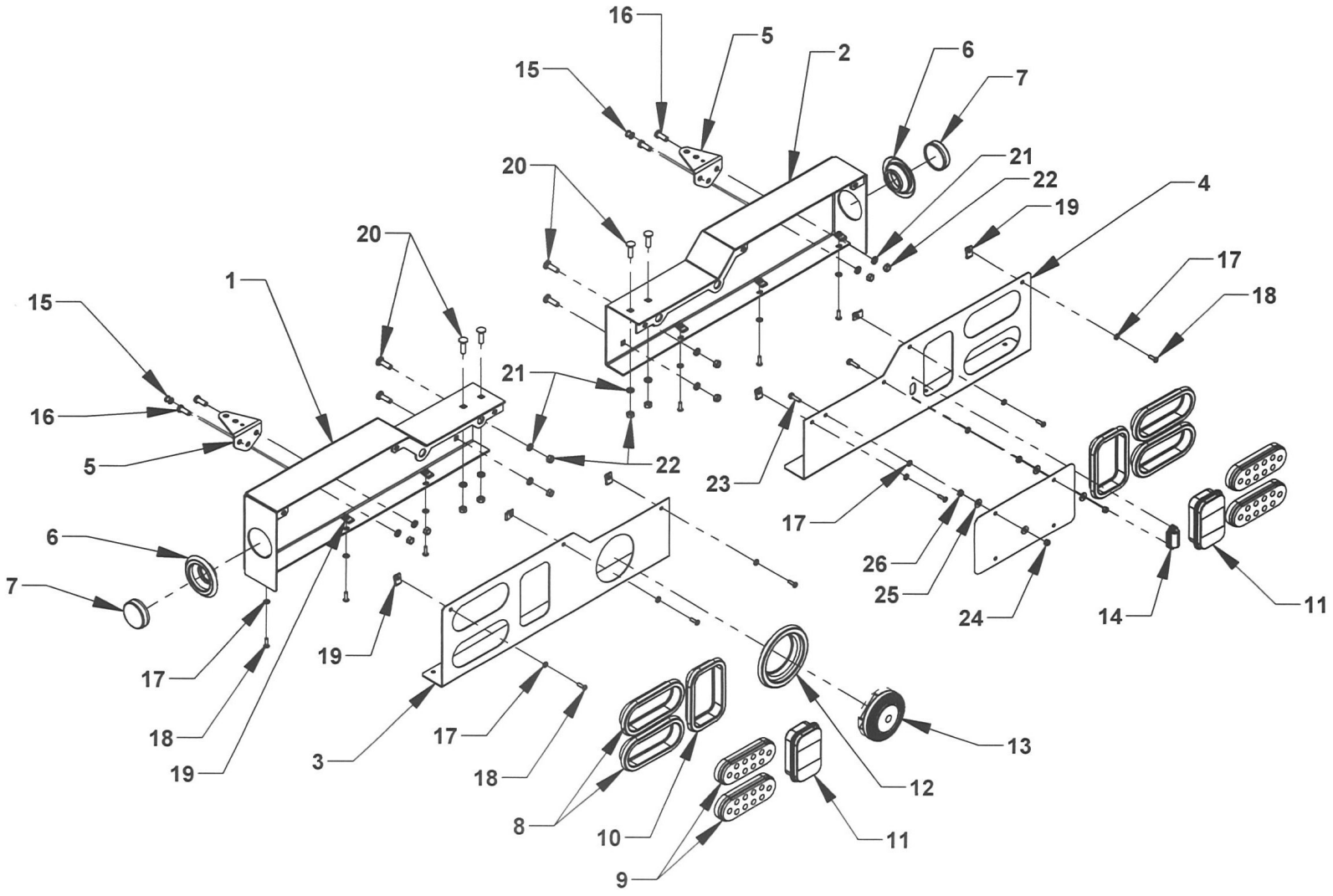

SERIES 12 GEN2 TAIL LIGHT COMPONENTS

REF. NO.	NO. REQ'D	PART NUMBER	DESCRIPTION
1	1	0809517L	TAIL LIGHT HOUSING WELDMENT - LH
2	1	0809517R	TAIL LIGHT HOUSING WELDMENT - RH
3	1	0751892L	12/16/20 LCG TAIL LIGHT BEZEL - LH G2
4	1	0751892R	12/16/20 LCG TAIL LIGHT BEZEL - RH G2
5	2	0750672	WORK LIGHT MOUNTING BRACKET
6	2	0311516	2-1/2 IN. MARKER LIGHT GROMMET
7	2	0311512	2-1/2 IN. RED MARKER LIGHT
8	4	0311503	6 IN. OVAL GROMMET
9	4	0311498	6 IN. OVAL RED LIGHT
10	2	0311511	CARRIER TAIL LIGHT GROMMET
11	2	0311510	CARRIER BACK UP LIGHT
12	1	0311528	BACK UP ALARM GROMMET
13	1	0306385	BACK UP ALARM
14	1	0311525	LICENSE PLATE LIGHT
15	2	0306113	TAIL LIGHT WIRE GROMMET
16	4	0400126	BOLT, HHCS 3/8-16 UNC x 1
17	14	0402111	LOCK WASHER - 1/4 SAE SS
18	12	0400071	SCREW, 1/4-20 UNC x 3/4 RD HD PHL SS
19	12	0400371	'U" NUT 1/4-20 UNC
20	8	0403053	BOLT, CARRIAGE 3/8-16 UNC x 1-1/4 SS
21	12	0402121	LOCK WASHER - 3/8 SAE SS
22	12	0402122	HEX NUT 3/8-16 UNC SS
23	2	0402021	BOLT, HHCS 1/4-20 UNC x 1 SS
24	2	0403052	NYLON LOCK NUT 1/4-20 UNC SS
25	4	0402110	FLAT WASHER 1/4 SAE SS
26	2	0400366	JAM NUT 1/4-20 UNC

4,000 LB.WHEEL LIFT
GEN 2 LCG

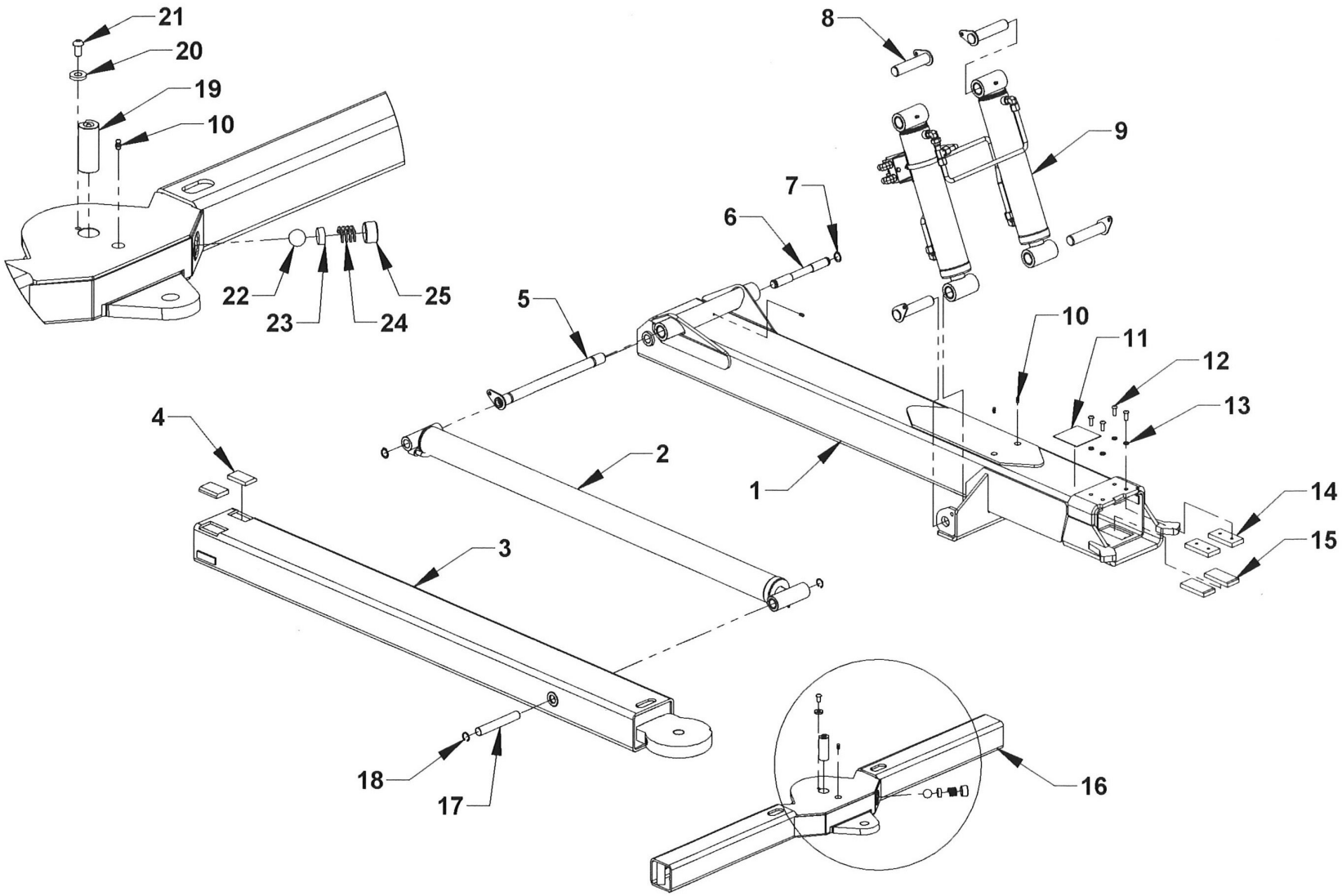

4,000 LB. WHEEL LIFT - GEN 2

REF. NO.	NO. REQ'D	PART NUMBER	DESCRIPTION
1	1	10270408	UNDERLIFT OUTER BOOM TUBE - 4K
2	1	72A30054	UNDERLIFT EXTEND CYLINDER 3.0 x 54
3	1	0811159	UNDERLIFT INNER BOOM TUBE 4K
4	2	65613	WEAR PAD 1/2 x 2 x 3
5	1	0809411U	WHEEL LIFT BOOM HINGE PIN
6	1	729352	PIN-CARRIER W/L EXTEND CYLINDER BASE
7	2	86100E	SNAP RING 1" EXTERNAL
8	4	14710	KEEPER PIN 1.23 x 4.50
9	2	72A33013	LIFT CYLINDER 3.25 BORE x 13 STROKE
	1	75FT33013	UNDERLIFT CYLINDER FLUD TUBE KIT
10	4	7B130	GREASE FITTING 1/4-28
11	1	0540041	UNDERLIFT RATING PLATE 4K
12	4	0403139	BOLT BHCS 3/8-16 UNC x 1
13	4	0400482	LOCK WASHER 3/8
14	2	63595H	WEAR PAD NYLATRON NSM 1/2 x 2 x 4 W/HOLES
15	2	63595	WEAR PAD NYLATRON NSM 1/2 x 2 x 4
16	1	0811160	CROSSBAR 4K (3.5 x 3.5)
17	1	72940	CYLINDER PIN 0.980 x 6.625
18	2	86100I	SNAP RING 1" INTERNAL
19	1	0940433	CROSSBAR PIVOT PIN
20	1	0720463	WASHER PIVOT PIN RETAINER 3/8
21	1	0403004	BOLT BHSC 3/8-16 UNC x 3/4
22	1	0308129	DETENT BALL 1"
23	1	07003396	SPACER CROSSBAR DETENT
24	1	0308131	SPRING CROSSBAR DETENT
25	1	0308130	PLUG CROSSBAR DETENT

WHEEL-LIFT CROSSBAR ATTACHMENTS

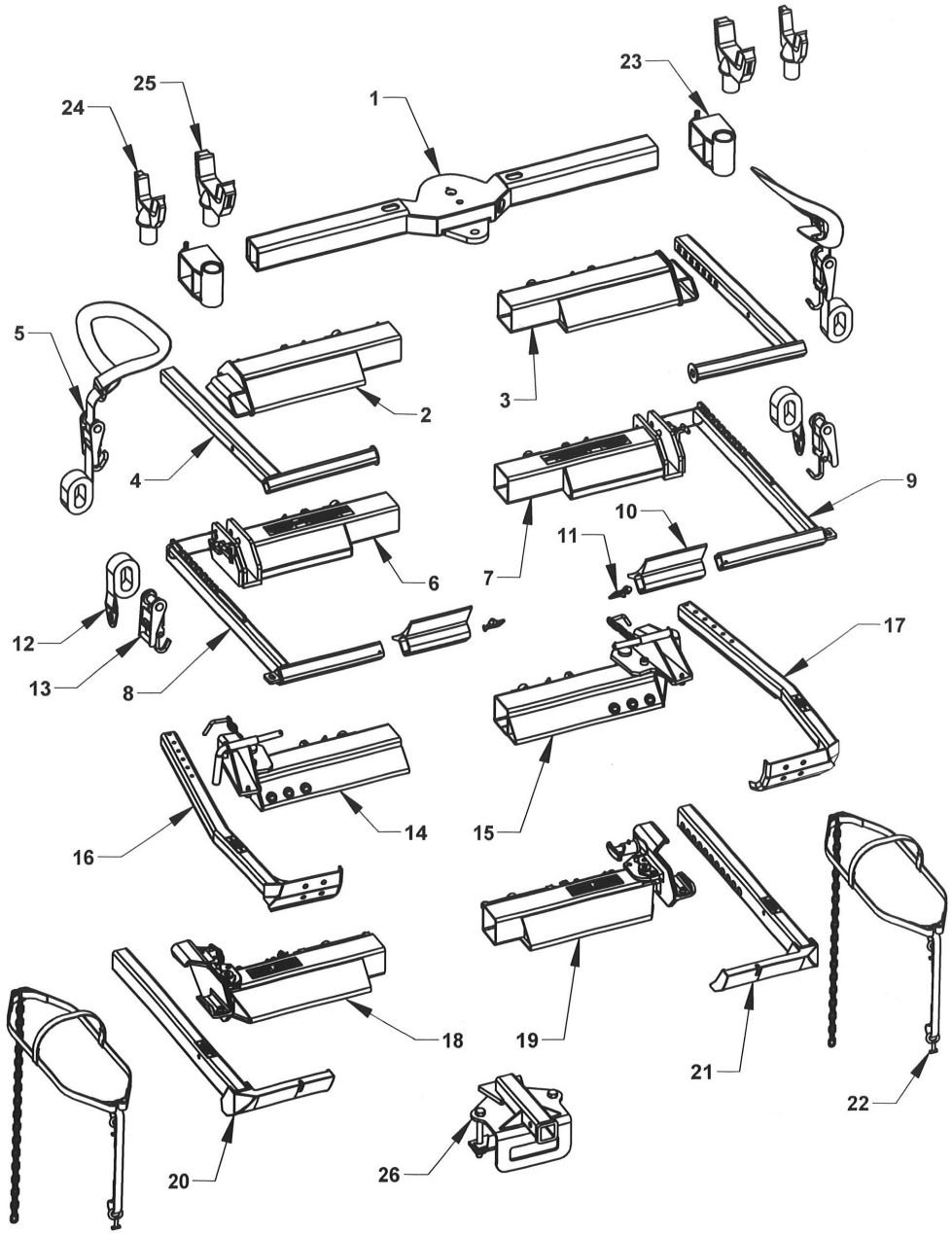

WHEEL LIFT CROSSBAR ATTACHMENTS

REF NO.	NO REQ'D	PART NUMBER	DESCRIPTION
1	1	0811160	CROSSBAR 4K (3.5 x 3.5)
2	1	0809283L	4-INCH WHEEL GRID - LH
3	1	0809283R	4-INCH WHEEL GRID - RH
4	2	08006748	STEEL L-ARM 4000 LB
5	2	0308664	STRAP AND RATCHET PIVOT ASSEMBLY
6	1	0940434L	WHEEL GRID (DROP-IN L-ARM) - LH
7	1	0940434R	WHEEL GRID (DROP-IN L-ARM) - RH
8	1	65250L	4000 LB L-ARM - LH
9	1	65250R	4000 LB L-ARM - RH
10	2	65245	REMOVABLE PAN (CHEVRON)
11	2	84911	SAFETY PIN, 5/16 (CHEVRON)
12	2	65285	WHEEL STRAP WITH D-RING
13	2	65280A	RATCHET AND HOOK
14	1	8800800	LH WHEEL GRID
15	1	8800900	RH WHEEL GRID
16	1	8700190	LH WHEEL RETAINER
17	1	8700180	RH WHEEL RETAINER
18	1	0909499L	WHEEL GRID 3WP - LH
19	1	0909499R	WHEEL GRID 3WP - RH
20	1	0803648	3-WAY PIVOT L-ARM - LH
21	1	0803649	3-WAY PIVOT L-ARM - RH
22	2	0902382	1 INCH NYLON POLY COAT BASKET STRAP
	2	65287	BASKET TIRE STRAP - MEDIUM-LARGE, BLUE
23	2	65460	3-1/2 INCH FORK HOLDER
24	2	663530	FRAME FORK, 3 INCH CAST
25	2	663545	FRAME FORK SHORT, 4-1/2 INCH CAST
26	1	0940458	REESE HITCH RECEIVER, COMMON GEN2

4,000 LB. UNDERLIFT
GEN 2 LCG

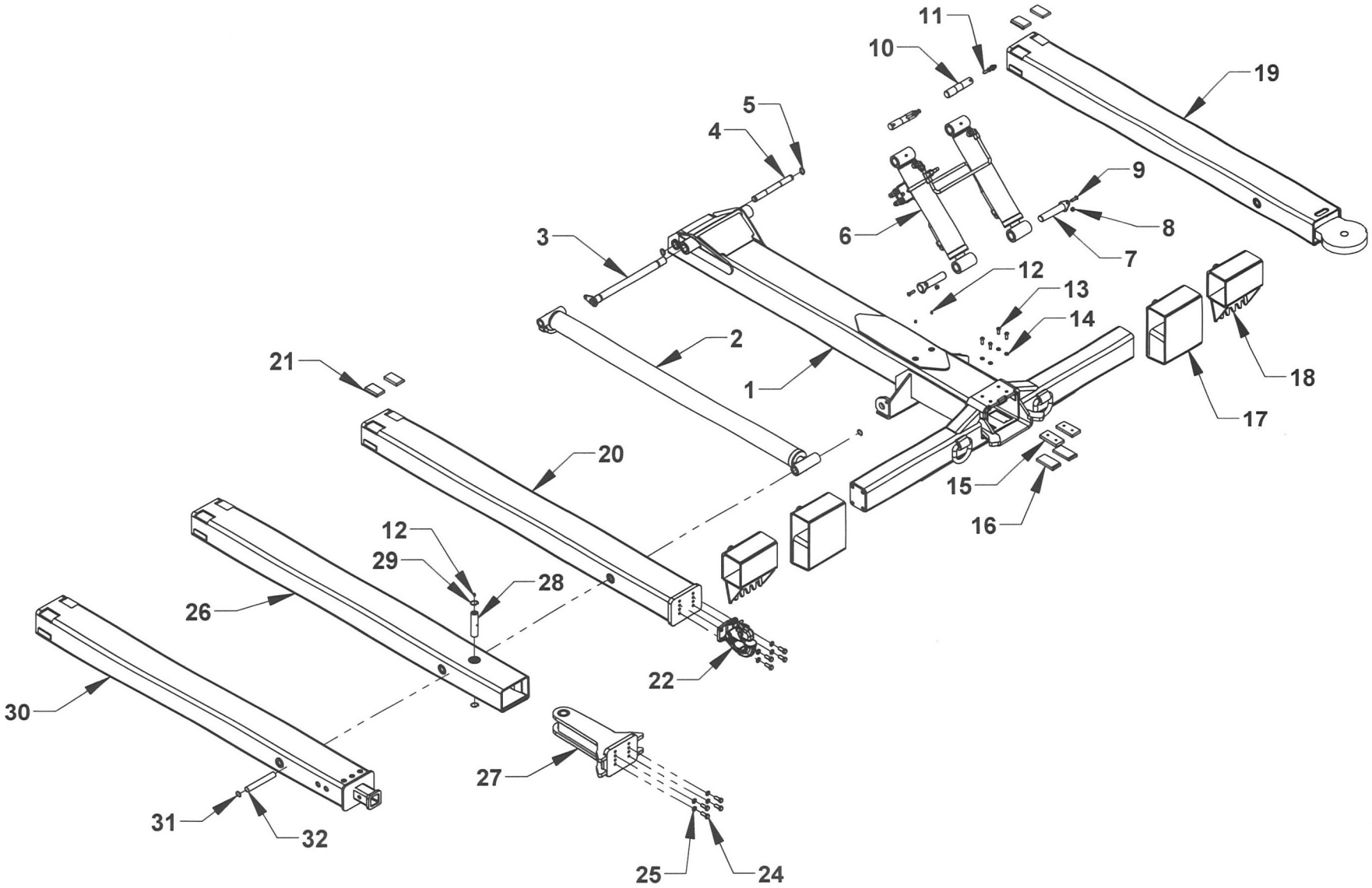

4,000 LB. UNDERLIFT - GEN 2

REF. NO.	. QTY	PART NUMBER	DESCRIPTION
1	1	10270408DS	WHEEL LIFT OUTER BOOM TUBE
2	1	72A30054	WL EXTEND CYLINDER 3.0 BORE x 54 STROKE
3	1	0809411U	WHEEL LIFT BOOM HINGE PIN
4	1	729352	PIN - WHEEL LIFT EXTEND CYLINDER BASE
5	2	86100E	SNAP RING 1' EXTERNAL
6	2	72A33013	LIFT CYLINDER 3.25 BORE x 13 STROKE
		75FT33013	UNDERLIFT CYLINDER FLUD TUBE KIT
7	2	14710	KEEPER PIN 1.23 x 5.50
8	4	0400392	NYLON LOCK NUT 3/8-16 UNC
9	4	0403154	BOLT, HHCS 3/8-16 UNC x 1-1/4
10	2	13068	PIN - TILT CYLINDER BASE
11	2	84680	KEEPER PIN 3/8 ROD END
12	3	7B130	GREASE FITTING 1/4-28
13	4	0403139	BOLT, BHCS 3/8-16 UNC x 1
14	4	0400482	LOCK WASHER 3/8
15	2	63595H	WEAR PAD NYLATRON NSM 1/2 x 2 x 4 W/HOLES
16	2	63595	WEAR PAD NYLATRON NSM 1/2 x 2 x 4
17	2	0809898-54	DOCK STABILIZER EXTENSION STAND (OPTIONAL)
18	2	0809646-54	DOCK STABILIZER SPADE (OPTIONAL)
19	1	0811159	4K INNER BOOM TUBE
20	1	10244P	4K INNER PINTLE BOOM TUBE
21	2	65613	WEAR PAD 1/2 x 2 x 3 NSM BEVELED
22	1	174017156	PINTLE HOOK ATTACHMENT
23	1	174017159	PINTLE BALL ATTACHMENT
24	4	0400177	BOLT, HEX 1/2-13 UNC x 1-1/4
25	4	0400491	WASHER 1/2 LOCK
26	1	102404-PP	4K INNER BOOM-PIVOTING PINTLE
27	1	143355	PIVOTING PINTLE HEAD WELDMENT - 4K
28	1	143142PP	PIN - PIVOTING PINTLE HEAD 4K
29	2	86125I	SNAP RING 1-1/4 INTERNAL
30	1	10244R	4K INNER BOOM - REESE RECEIVER
31	2	86100I	SNAP RING 1" INTERNAL
32	1	72940	CYLINDER PIN

UNDERLIFT CYLINDER FLUID TUBE GROUP

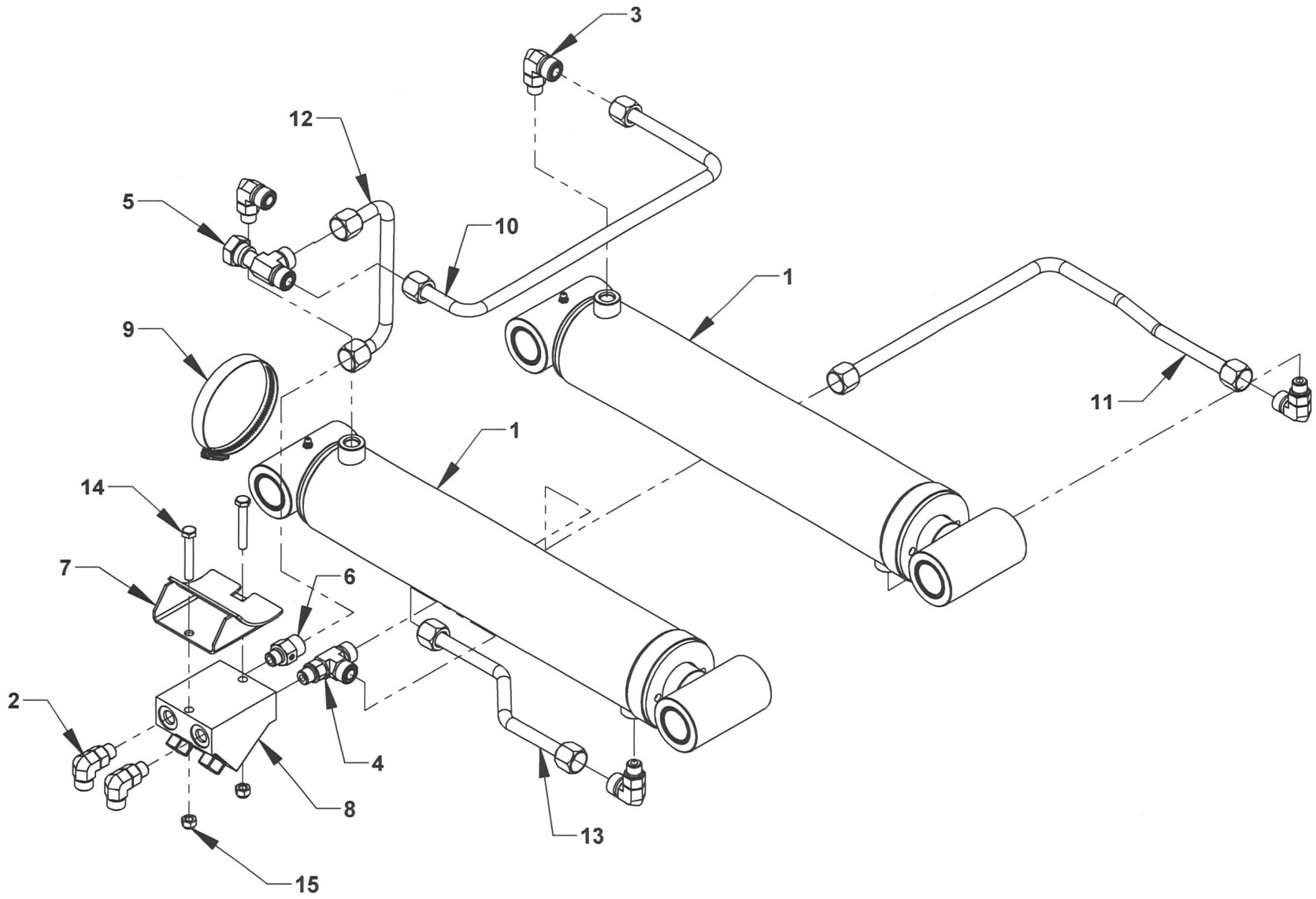

UNDERLIFT CYLINDER FLUID TUBE GROUP

REF. NO.	PART #	QTY	DESCRIPTION
1	72A33013	2	LIFT CYLINDER 3.25 x 1.75 x 13.00
	75FT33013		FLUID TUBE KIT
2	ADPTR-FF1868T0606S	2	ADAPTER 90 ORS/ORB 6 x 6
3	ADPTR-FF1868T0806S	4	ADAPTER 90 ORS/ORB 8 x 6
4	ADPTR-FF1865T0806S	1	ADAPTER TEE ORS/ORS/ORB 8 x 8 x 6
5	ADPTR-FF2114T0808S	1	ADAPTER TEE ORS 8 x 8
6	ADPTR-FF1852T0806	1	ADAPTER STRAIGHT ORS/ORB 8 x 6
7	0809875-325	1	UNDERLIFT VALVE MOUNTING BRACKET
8	74345	1	DUAL COUNTERBALANCE VALVE CBCG-XVN
9	03017065	1	BAND CLAMP #56, 4 x 9/16 SS
10	72H33013L2	1	UNDERLIFT FLUID TUBE ASSEMBLY - LEFT
11	72H33013L1	1	UNDERLIFT FLUID TUBE ASSEMBLY - LEFT
12	72H33013R2	1	UNDERLIFT FLUID TUBE ASSEMBLY - RIGHT
13	72H33013R1	1	UNDERLIFT FLUID TUBE ASSEMBLY - RIGHT
14	0400824	2	BOLT HHCS 5/16-18 UNC x 1-3/4 GR5 ZINC
15	0400382	2	NYLON LOCK NUT 5/16-18 UNC GR5 ZINC

PIVOT L-ARM RECEIVER GROUP

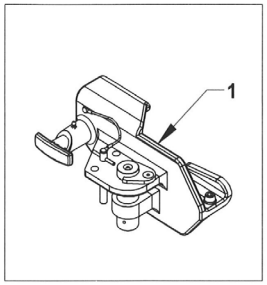

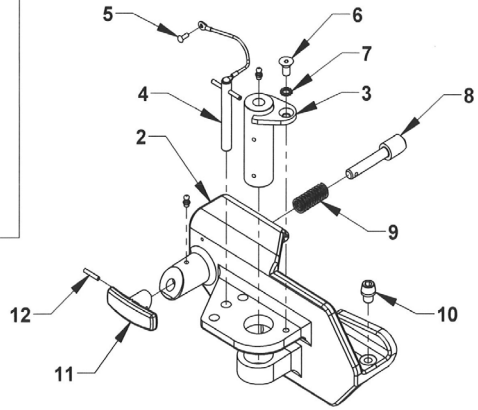

REF	PART #	QTY.	DESCRIPTION
1	09007328L	1	PIVOT L-ARM RECEIVER GROUP-LH
	09007328R		PIVOT L-ARM RECEIVER GROUP-RH
2	0719079	1	PIVOT L-ARM RECEIVER CASTING-LH
	0719080		PIVOT L-ARM RECEIVER CASTING-RH
3	0802187	1	L-ARM RECEIVER CASTING PIVOT PIN
4	0904744	1	PIN ASSEMBLY
	0714415	1	PIVOT LOCK PIN
	0303918	1	LANYARD
	0400044	1	DRIVE SCREW #10-24 x 1/2 ROUND HEAD
5	0400044	1	DRIVE SCREW #10-24 x 1/2 ROUND HEAD
6	0400349	1	SCREW 3/8-16 x 1/2 FHSC
7	0400481	1	LOCK WASHER 3/8 EXTERNAL TOOTH
8	0707505	1	7/8 CAM PIN
9	0302641	1	CAM PIN SPRING
10	0712933	1	SCREW 1/2-13 x 1/2 TAPERED SOCKET CAP
11	0302648	1	T-HANDLE
12	0400559	1	ROLL PIN 3/16 -1

AUTOGRIP WHEEL LIFT

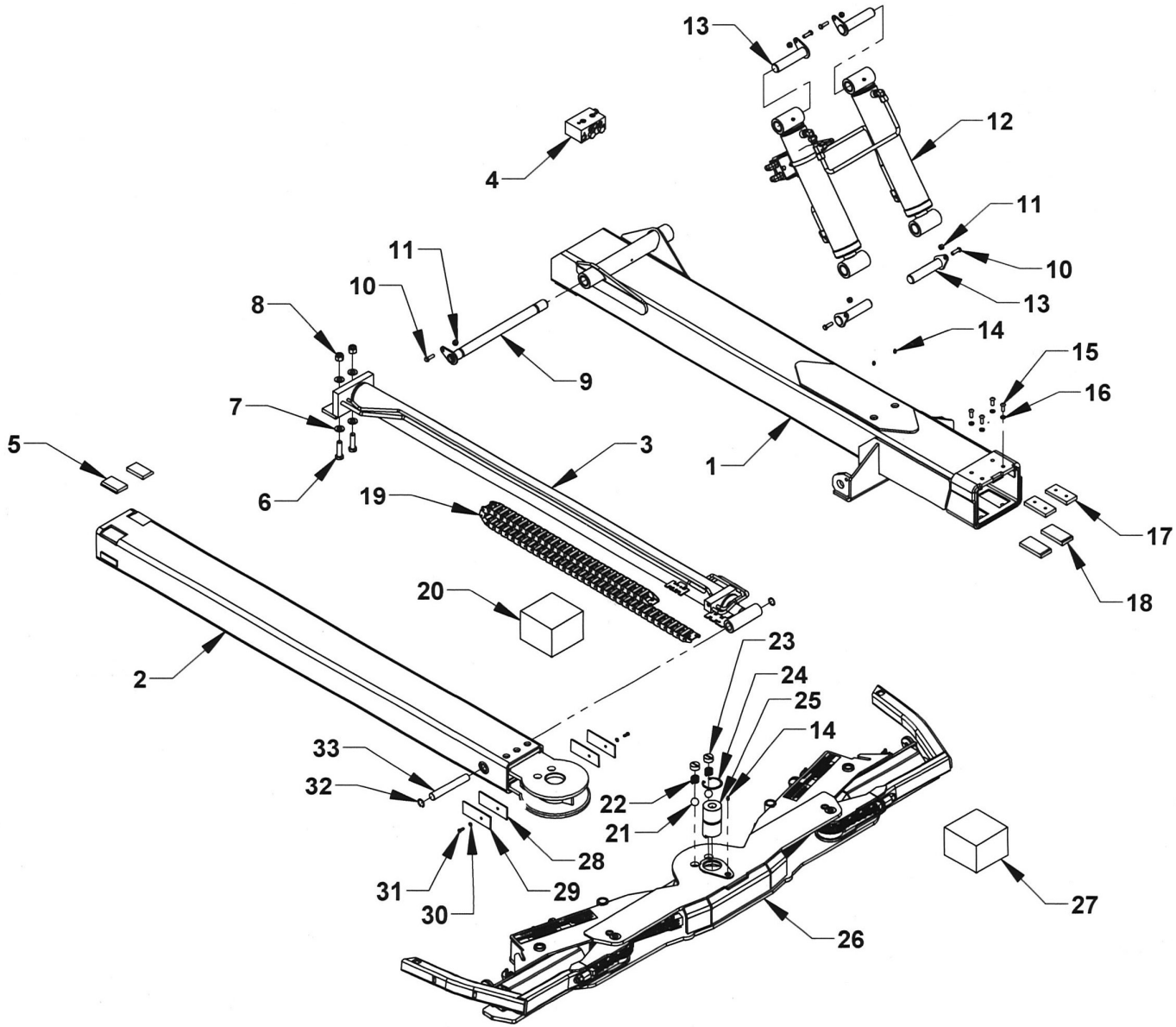

AUTOGRIP WHEEL LIFT

REF NO.	PART #	QTY	DESCRIPTION
1	10270410	1	AUTOGRIP OUTER BOOM TUBE - GEN2 LCG 4K
2	08021745	1	AUTOGRIP INNER TUBE GEN3
3	72136	1	AUTOGRIP EXTEND CYLINDER - CARRIER
4	74341	1	FLOW DIVIDER COUNTER BALANCE VALVE
5	65613	2	WEAR PAD 1/2 x 2 x 3 NSM BEVELED
6	0403141	2	BOLT HHCS 5/8-11 UNC x 2-1/4
7	0400505	4	FLAT WASHER 5/8
8	0400421	2	NYLON LOCK NUT 5/8-11 UNC
9	0809411U	1	WHEEL LIFT BOOM HINGE PIN
10	0400122	5	BOLT, HHCS 3/8-16 UNC x 1-1/4
11	0400392	5	NYLON LOCK NUT 3/8-16 UNC
12	72A33013	2	LIFT CYLINDER 3.25 x 1.75 x 13.00
	75FT33013	1	LIFT CYLINDER FLUID TUBE KIT
13	14710	4	KEEPER PIN 1.23 x 5.50
14	7B130	3	GREASE FITTING 1/4-28 UNF
15	0403139	4	BOLT, BHCS 3/8-16 UNC x 1
16	0400482	4	LOCK WASHER 3/8"
17	63595H	2	WEAR PAD NYLATRON NSM 1/2 x 2 x 4 WITH HOLES
18	63595	2	WEAR PAD NYLATRON NSM 1/2 x 2 x 4
19	69757	1	AUTOGRIP HOSE TRACK 58 LINKS
20	75048	1	HOSE KIT IGUS TRACK
21	0308129	2	BALL CHROME 1" (GRADE 16/25)
22	0300066	2	AUTOGRIP DETENT SPRING GEN2
23	643272	2	AUTOGRIP DETENT SCREW GEN2
24	86250I	1	SNAP RING 2-1/2" INTERNAL
25	644402	1	AUTOGRIP CROSSBAR PIVOT PIN GEN2
26	644002CA	1	AUTOGRIP CROSSBAR GEN2
27	75048C	1	HOSE KIT ARM CYLINDERS
28	64304R	2	RUBBER GASKET FOR 64304C
29	64304C	2	HOSE CLAMP FOR SIDE OF AUTOGRIP II YOKE
30	0400452	2	LOCK WASHER 1/4"
31	0403142	2	BOLT, BUTTON HEAD 1/4-20 x 3/4
32	86100I	2	SNAP RING 1" INTERNAL
33	72940	1	CYLINDER PIN 0.980 x 6-5/8

AUTOGRIP DOCK STABILIZER WHEEL LIFT

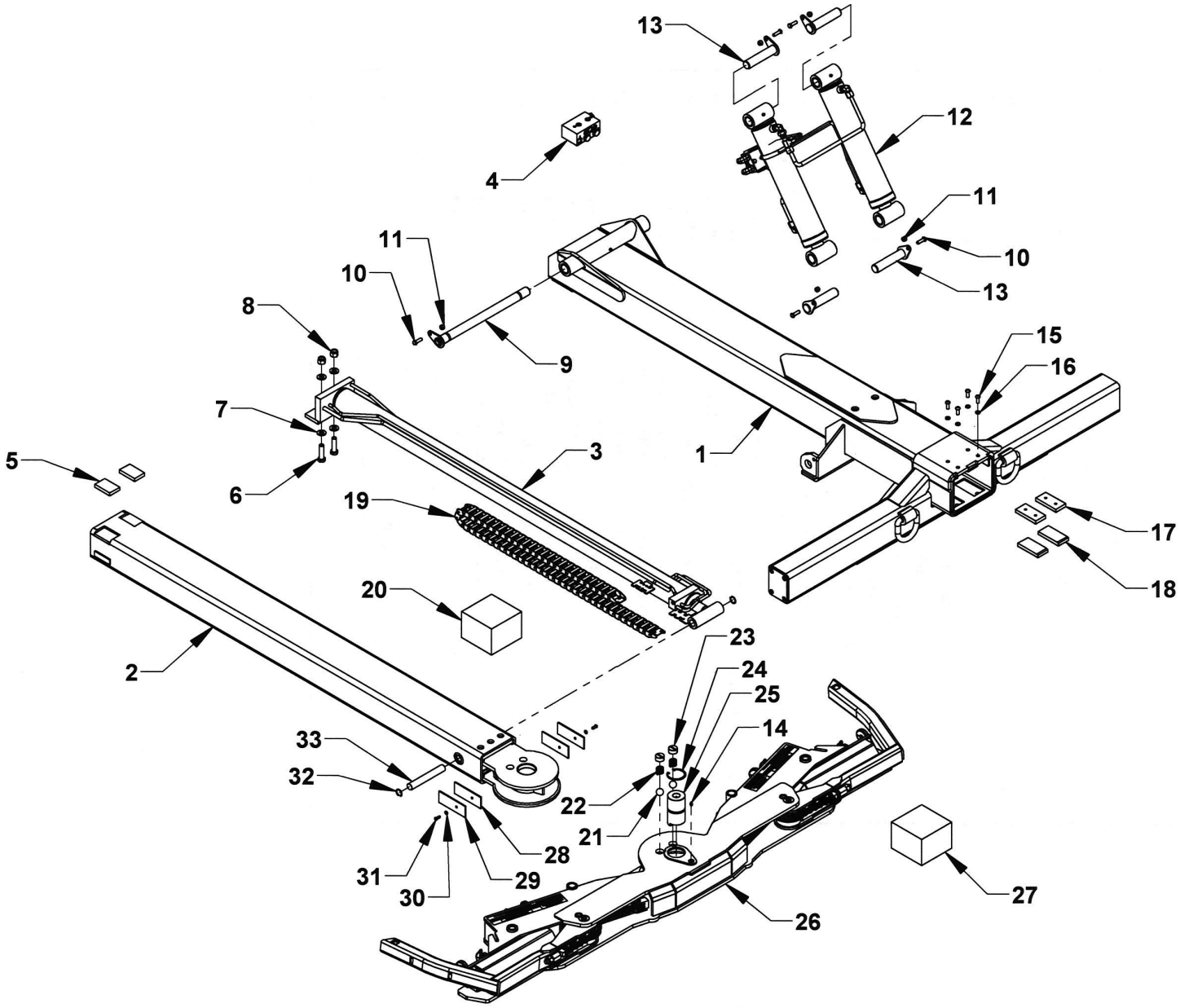

AUTOGRIP DOCK STABILIZER WHEEL LIFT

REF. NO.	QTY	PART NUMBER	DESCRIPTION
1	1	08017311	DOCK STABILIZER AUTOGRIP OUTER BOOM TUBE - 4K
2	1	08021745	AUTOGRIP INNER TUBE GEN3
3	1	72136	AUTOGRIP EXTEND CYLINDER - CARRIER
4	1	74341	FLOW DIVIDER COUNTER BALANCE VALVE
5	2	65612	WEAR PAD 1/2 x 2 x 3 NSM
6	2	0403141	BOLT, HHCS 5/8-11 UNC x 2-1/4
7	4	0400505	FLAT WASHER 5/8
8	2	0400421	NYLON LOCK NUT 5/8-11 UNC
9	1	0809411U	WHEEL LIFT BOOM HINGE PIN
10	5	0400122	BOLT HHCS 3/8-16 UNC x 1-1/4
11	5	0400392	NYLON LOCK NUT 3/8-16 UNC
12	2	72A33013	LIFT CYLINDER 3.25 x 1.75 x 13.00
	1	75FT33013	LIFT CYLINDER FLUID TUBE KIT
13	4	14710	KEEPER PIN 1.23 x 4.50
14	3	7B130	GREASE FITTING 1/4-28 UNF
15	4	0403139	BOLT BHCS 3/8-16 UNC x 1
16	4	0400482	LOCK WASHER 3/8
17	2	63595H	WEAR PAD NYLATRON NSM 1/2 x 2 x 4 W/HOLES
18	2	63595	WEAR PAD NYLATRON NSM 1/2 x 2 x 4
19	1	69757	AUTOGRIP HOSE TRACK 58 LINKS
20	1	75048	HOSE KIT IGUS TRACK
21	2	0308129	BALL CHROME 1 IN. (GRADE 16/25)
22	2	0300066	AUTOGRIP DETENT SPRING GEN2
23	2	643272	AUTOGRIP DETENT SCREW GEN2
24	1	86250I	SNAP RING 2-1/2 INTERNAL
25	1	644402	AUTOGRIP CROSSBAR PIVOT PIN GEN2
26	1	644002CA	AUTOGRIP CROSSBAR GEN2
27	1	75048C	HOSE KIT ARM CYLINDERS
28	2	64304R	RUBBER GASKET FOR 64304C
29	2	64304C	HOSE CLAMP FOR SIDE OF AUTOGRIP II YOKE
30	2	0400452	LOCK WASHER 1/4
31	2	0403142	BOLT BHCS 1/4-20 x 3/4
32	2	86100I	SNAP RING 1" INTERNAL
33	1	72940	CYLINDER PIN 0.980 x 6-5/8

DOCK STABILIZER

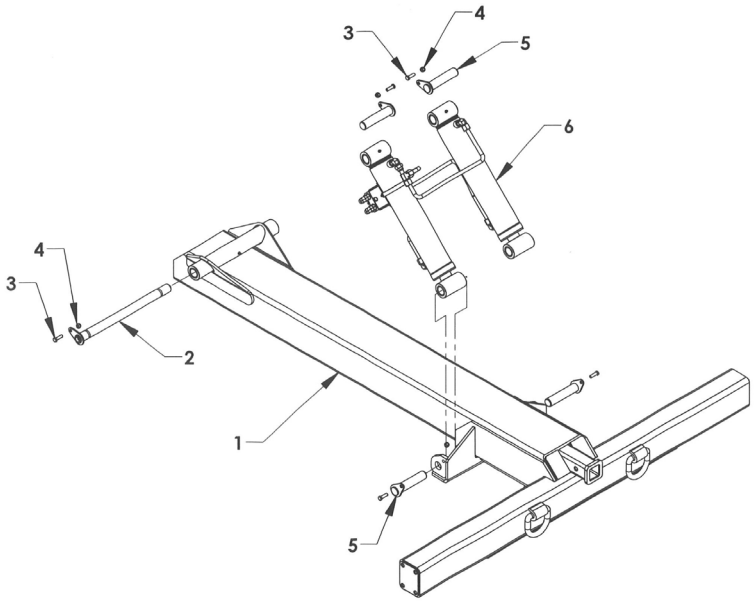

REF	PART #	QTY	DESCRIPTION
1	0810010-12	1	DOCK STABILIZER WELDMENT
2	0809411U	1	WHEEL LIFT BOOM HINGE PIN
3	0400122	5	BOLT HHCS 3/8-16 UNC x 1-1/4
4	0400392	5	NYLON LOCK NUT 3/8-16 UNC
5	14710	4	KEEPER PIN 1.23 x 4.50
6	72A33013	2	UNDERLIFT CYLINDER 3.25 BORE x 13 STROKE
	75FT33013	1	UNDERLIFT CYLINDER FLUID TUBE KIT

AUTOGRIP II COMPONENTS

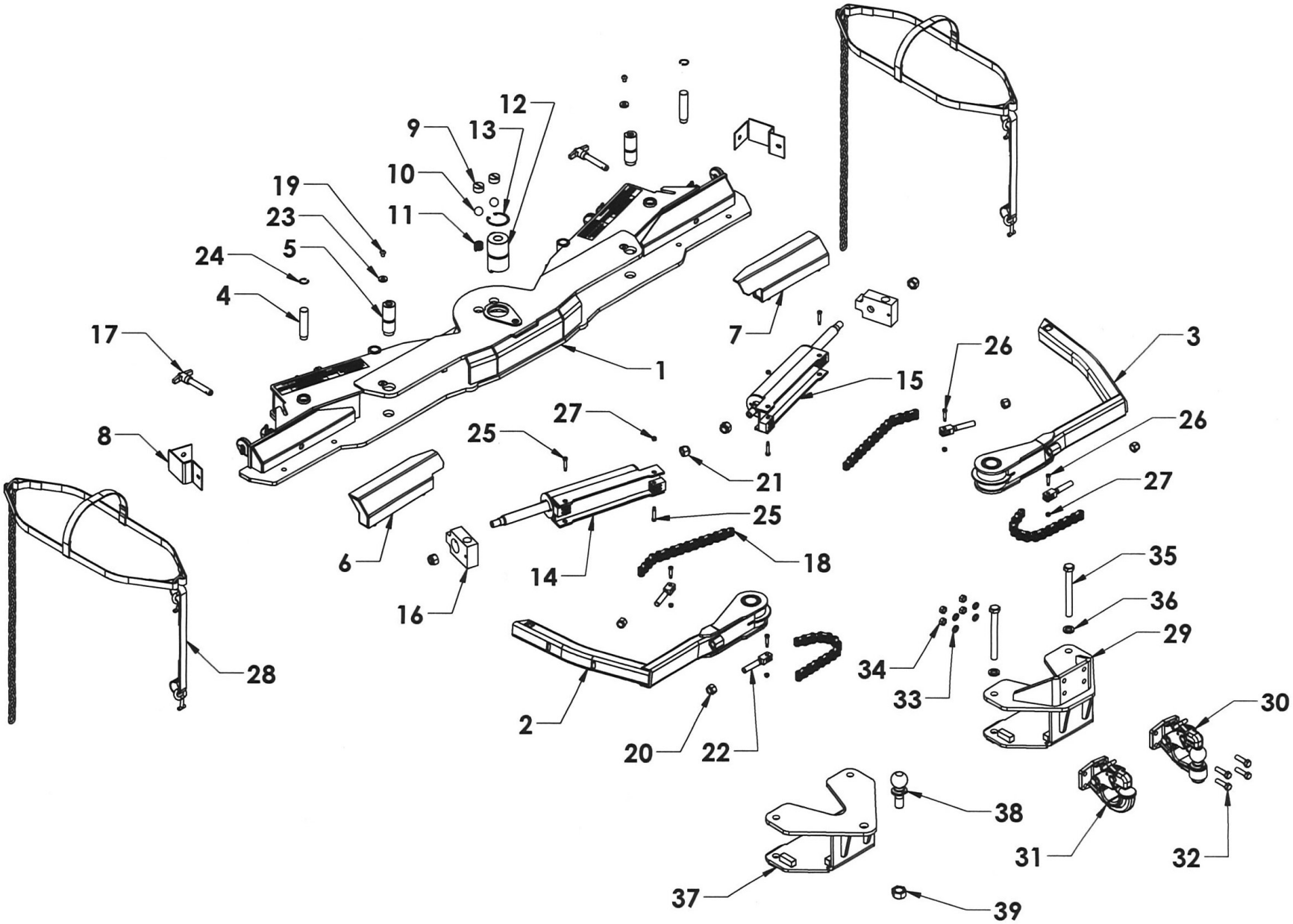

AUTOGRIP II COMPONENTS

REF	PART #	QTY	DESCRIPTION
1	644002	1	CROSSBAR WELDMENT
2	644352CL	1	WHEEL RETAINER - LH
3	644352CR	1	WHEEL RETAINER - RH
4	644432	2	WHEEL RETAINER CYLINDER PIN
5	644452	2	ARM PIVOT PIN
6	697402L	1	WHEEL SPACER - LH
7	697402R	1	WHEEL SPACER - RH
8	644292	2	HOSE GUARD
9	643272	2	SCREW-PLUG CROSSBAR DETENT
10	0308129	2	BALL CHROME 1" (GRADE 16/25)
11	03000066	2	AUTOGRIP GEN2 DETENT SPRING
12	644402	1	CROSSBAR PIN
13	862501	1	SNAP RING 2.500 INCH INTERNAL
14	720152L	2	WHEEL RETAINER CYLINDER - LH
15	720152R	2	WHEEL RETAINER CYLINDER - RH
16	727162	2	L-ARM CYLINDER END BLOCK
17	84291	2	T-PIN 5/8 x 3
18	87440	4	AUTOGRIP ARM CHAIN
19	0403140	2	BOLT HGCS 3/8-16 UNC x 1/2
20	0400421	4	5/8-11 NYLON LOCK NUT
21	0400430	4	3/4-10 NYLON LOCK NUT
22	64441	4	CHAIN CLEVIS
23	0720463	2	WASHER PIVOT PIN RETAINER - 3/8
24	86100I	2	SNAP-RING 1.000 INCH INTERNAL
25	0403163	4	BOLT SHCS 5/16 x 1-1/4 SHOULDER 1/4-20
26	0403164	4	BOLT SHCS 5/16 x 1 SHOULDER 1/4-20
27	0400367	8	NYLON LOCK NUT 1/4-20
28	0902382	2	1 INCH NYLON POLY COAT BASKET STRAP
	65287		BLUE BASKET TIRE STRAP - TRUCK (OPT)
29	694520	1	AUTOGRIP PINTLE ADAPTOR (OPTIONAL)
30	174017159	1	PINTLE BALL ATTACHMENT (OPTIONAL)
31	174017156	1	PINTLE HOOK ATTACHMENT (OPTIONAL)
32	0403058	4	BOLT, HHCS 1/2-13 x 1-3/4 GR8
33	0400491	4	LOCK WASHER, 1/2
34	0400407	4	HEX NUT 1/2-13 UNC
35	0403092	2	BOLT, HHCS 3/4-10 UNC x 7 GR8
36	0403082	2	LOCK WASHER 3/4
37	694510	1	AUTOGRIP TOWBALL ADAPTOR (OPTIONAL)
38	03004649	1	TOWBALL
39	83711	1	NUT 1.000" RAMCO LOCK

Section V - PARTS

AUTOGRIP II COMPONENTS

REF	PART #	QTY	DESCRIPTION
1	644002	1	CROSSBAR WELDMENT
2	644352CL	1	WHEEL RETAINER - LH
3	644352CR	1	WHEEL RETAINER - RH
4	644432	2	WHEEL RETAINER CYLINDER PIN
5	644452	2	ARM PIVOT PIN
6	697402L	1	WHEEL SPACER - LH
7	697402R	1	WHEEL SPACER - RH
8	644292	2	HOSE GUARD
9	643272	2	SCREW-PLUG CROSSBAR DETENT
10	0308129	2	BALL CHROME 1" (GRADE 16/25)
11	03000066	2	AUTOGRIP GEN2 DETENT SPRING
12	644402	1	CROSSBAR PIN
13	862501	1	SNAP RING 2.500 INCH INTERNAL
14	720152L	2	WHEEL RETAINER CYLINDER - LH
15	720152R	2	WHEEL RETAINER CYLINDER - RH
16	727162	2	L-ARM CYLINDER END BLOCK
17	84291	2	T-PIN 5/8 x 3
18	87440	4	AUTOGRIP ARM CHAIN
19	0403140	2	BOLT HGCS 3/8-16 UNC x 1/2
20	0400421	4	5/8-11 NYLON LOCK NUT
21	0400430	4	3/4-10 NYLON LOCK NUT
22	64441	4	CHAIN CLEVIS
23	0720463	2	WASHER PIVOT PIN RETAINER - 3/8
24	86100I	2	SNAP-RING 1.000 INCH INTERNAL
25	0403163	4	BOLT SHCS 5/16 x 1-1/4 SHOULDER 1/4-20
26	0403164	4	BOLT SHCS 5/16 x 1 SHOULDER 1/4-20
27	0400367	8	NYLON LOCK NUT 1/4-20
28	0902382	2	1 INCH NYLON POLY COAT BASKET STRAP
	65287		BLUE BASKET TIRE STRAP - TRUCK (OPT)
29	694520	1	AUTOGRIP PINTLE ADAPTOR (OPTIONAL)
30	174017159	1	PINTLE BALL ATTACHMENT (OPTIONAL)
31	174017156	1	PINTLE HOOK ATTACHMENT (OPTIONAL)
32	0403058	4	BOLT, HHCS 1/2-13 x 1-3/4 GR8
33	0400491	4	LOCK WASHER, 1/2
34	0400407	4	HEX NUT 1/2-13 UNC
35	0403092	2	BOLT, HHCS 3/4-10 UNC x 7 GR8
36	0403082	2	LOCK WASHER 3/4
37	694510	1	AUTOGRIP TOWBALL ADAPTOR (OPTIONAL)
38	03004649	1	TOWBALL
39	83711	1	NUT 1.000" RAMCO LOCK

V-39

INBOARD TILT CYLINDERS

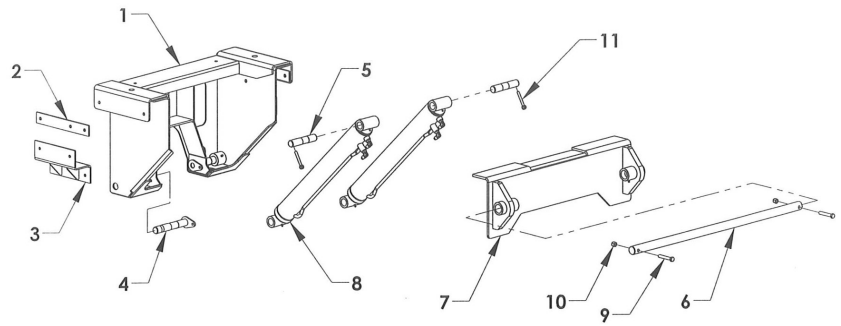

REF	PART #	QTY	DESCRIPTION
1	1A8002	1	INBOARD SADDLE
2	1A821S	2	SADDLE SHIM
3	1A925	2	FRAME MOUNTING BRACKET
4	1A828A	2	INBOARD SADDLE TILT PIN
5	13068	2	PIN - TILT CYLINDER BASE
6	0750952	1	HINGE PIN - 1-1/2 x 41-3/8
7	0809533	1	HINGE ANGLE
8	721092	2	CYLINDER - CARRIER TILT
9	0403159	2	BOLT 1/2-20 UNF x 3 GRADE 5
10	0403160	2	NYLON LOCK NUT 1/2-20 UNF
11	84680	2	PIN EYE

Section V - PARTS

INBOARD TILT CYLINDERS

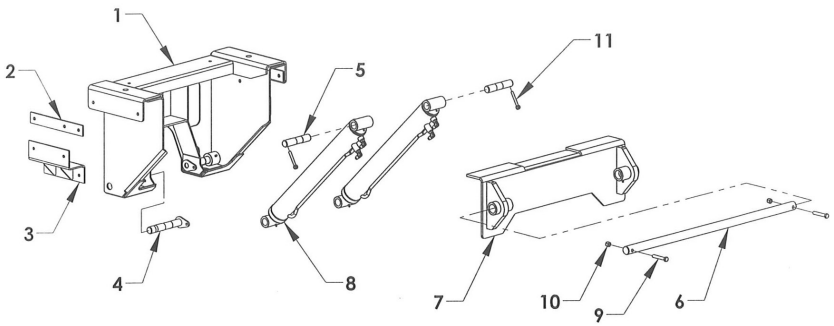

REF	PART #	QTY	DESCRIPTION
1	1A8002	1	INBOARD SADDLE
2	1A821S	2	SADDLE SHIM
3	1A925	2	FRAME MOUNTING BRACKET
4	1A828A	2	INBOARD SADDLE TILT PIN
5	13068	2	PIN - TILT CYLINDER BASE
6	0750952	1	HINGE PIN - 1-1/2 x 41-3/8
7	0809533	1	HINGE ANGLE
8	721092	2	CYLINDER - CARRIER TILT
9	0403159	2	BOLT 1/2-20 UNF x 3 GRADE 5
10	0403160	2	NYLON LOCK NUT 1/2-20 UNF
11	84680	2	PIN EYE

12 LCG INBOARD TILT CYLINDERS OUTBOARD SADDLES (OPTIONAL)

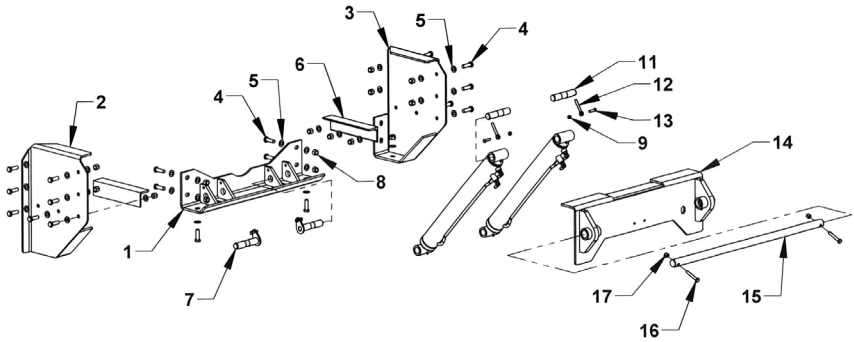

REF	PART #	QTY	DESCRIPTION
1	1A560	1	SADDLE CONNECTING ANGLE
2	1A540L	1	OUTBOARD SADDLE, LH
3	1A540R	1	OUTBOARD SADDLE, RH
4	0400274	20	BOLT, HHCS 5/8-11 UNC x 2
5	0400505	40	FLAT WASHER 5/8
6	1A743	2	SADDLE MOUNTING ANGLE
7	1A525	2	OUTBOARD SADDLE TILT PIN
8	0400421	20	5/8-11 NYLOCK NUT Z
9	0400392	4	NYLON LOCK NUT 3/8-16 UNC
10	721092	2	TILT CYLINDER 3 BORE x 23 STROKE
11	13068	2	PIN - TILT CYLINDER BASE
12	84680	2	PIN EYE
13	0400132	4	BOLT, HHCS 3/8-16 UNC x 1-1/2
14	0809533	1	HINGE ANGLE
15	0750952	1	HINGE PIN - 1-1/2 x 41-3/8
16	0403159	2	BOLT, HHCS 1/2-20 x 3 Z
17	0403160	2	NYLON LOCK NUT 1/2-20 UNC

12 GAL. INBOARD OIL RESERVOIR GROUP-763100G

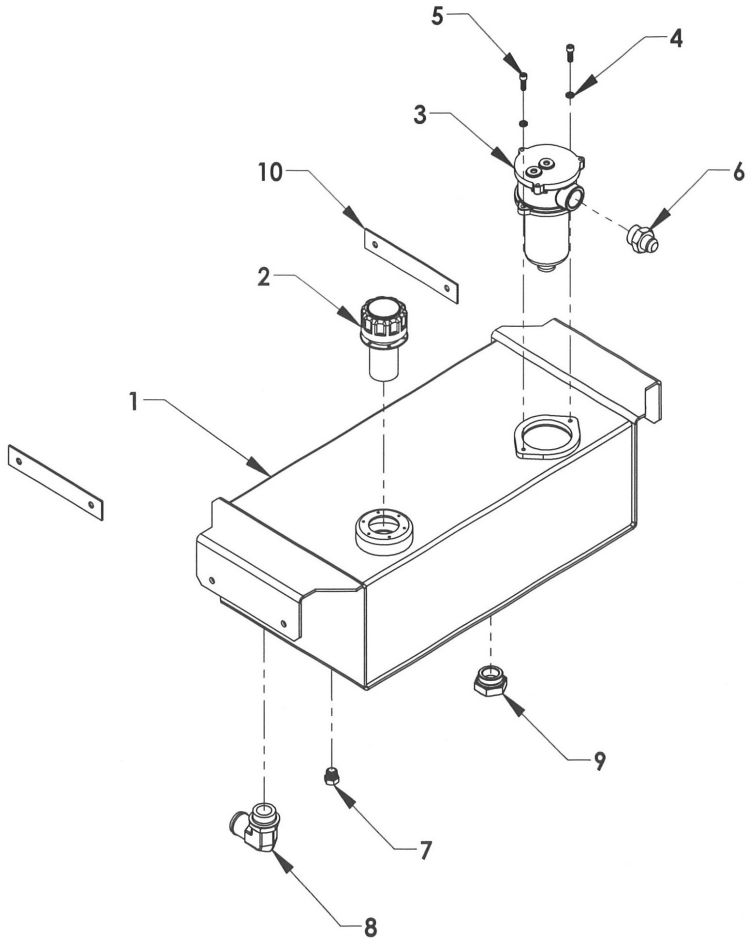

REF	PART #	QTY	DESCRIPTION
1	763100	1	INBOARD OIL RESERVOIR WELDMENT
2	76213	1	FILLER BREATHER CAP
3	76270	1	FILTER ASSEMBLY
4	76271	1	REPLACEMENT FILTER ELEMENT
5	0402118	2	LOCK WASHER 5/16 SS
6	04001427	2	BH CAP SCREW 5/16-18 UNC x 7/8 SS
7	0301368	1	ADAPTOR 202702-16 x 12
8	03006085	1	ADAPTOR 900598-8 (DRAIN PLUG)
9	77C92	1	20 x 24 SUCTION HOSE FITTING 90 °
10	77620	1	ADAPTOR 900598-20 (DRAIN PLUG)
11	763106	2	FRAME WIDTH SHIM

Section V - PARTS

12 GAL. INBOARD OIL RESERVOIR GROUP-763100G

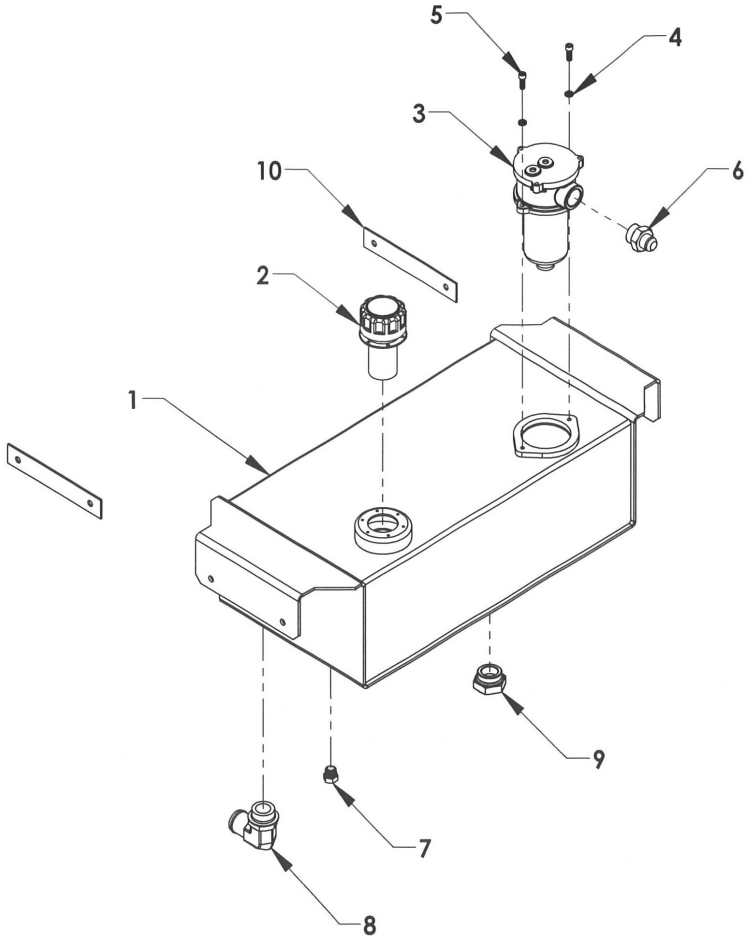

REF	PART #	QTY	DESCRIPTION
1	763100	1	INBOARD OIL RESERVOIR WELDMENT
2	76213	1	FILLER BREATHER CAP
3	76270	1	FILTER ASSEMBLY
4	76271	1	REPLACEMENT FILTER ELEMENT
5	0402118	2	LOCK WASHER 5/16 SS
6	04001427	2	BH CAP SCREW 5/16-18 UNC x 7/8 SS
7	0301368	1	ADAPTOR 202702-16 x 12
8	03006085	1	ADAPTOR 900598-8 (DRAIN PLUG)
9	77C92	1	20 x 24 SUCTION HOSE FITTING 90 °
10	77620	1	ADAPTOR 900598-20 (DRAIN PLUG)
11	763106	2	FRAME WIDTH SHIM

V-42

14 GAL. OUTBOARD OIL TANK GROUP

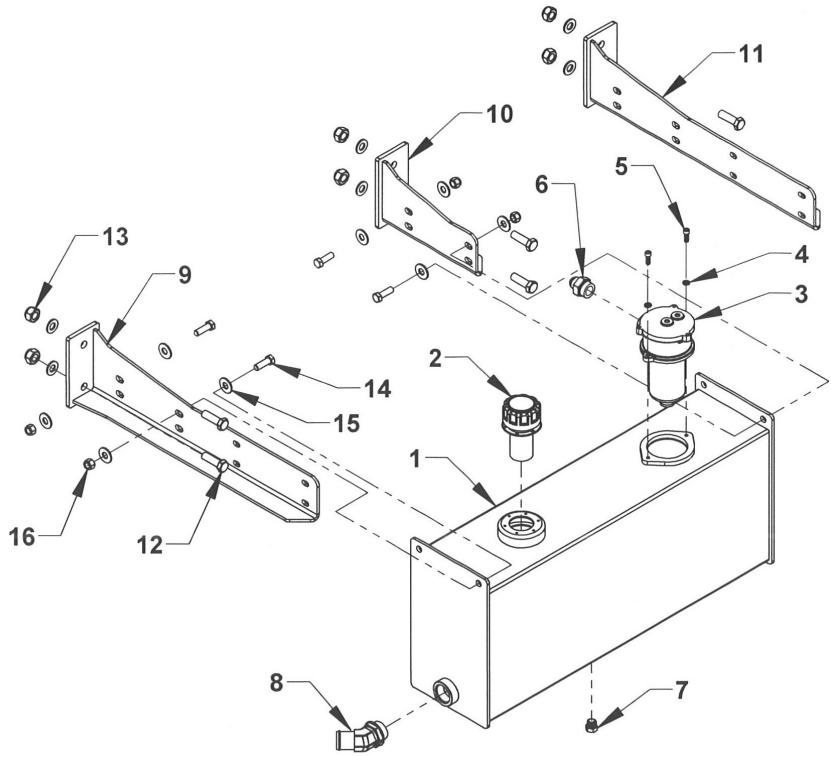

REF	PART#	QTY	DESCRIPTION
1	762110G	1	14 GAL. OUTBOARD OIL TANK WELDMENT
2	76213G	1	FILLER BREATHER CAP ASSEMBLY
3	76270	1	FILTER ASSEMBLY
	76271	1	REPLACEMENT FILTER ELEMENT
4	0402118	2	LOCK WASHER 5/16 SS
5	04001427	2	BHCS SCHS 5/16-18 UNC x 7/8 SS
6	0301368	1	ADAPTOR 202702 16 x 12
7	03006085	1	ADAPTOR 900598-8 (MAGNETIC DRAIN PLUG)
8	03006341	1	20 x 24 SUCTION HOSE FITTING 45°
9	37855R	1	TANK MTG. BRACKET - RH
	37858R	1	TANK MTG. BRACKET (SHORT) - RH
10	37858L	1	TANK MTG. BRACKET (SHORT) -LH
11	37855L	1	TANK MTG. BRACKET - LH
12	0400274	6	BOLT 5/8-11 x 2 UNC GR8
13	0400426	6	NYLON LOCK NUT 5/8-11 UNC ZINC PLATED
14	0400181	6	BOLT 1/2-13 UNC x 1-1/2 GR5
15	0400492	8	FLAT WASHER 1/2 ZINC PLATED
16	0403100	4	NYLON LOCK NUT 1/2-13 UNC ZINC PLATED

DIRECT MOUNT PUMP - 18 GPM

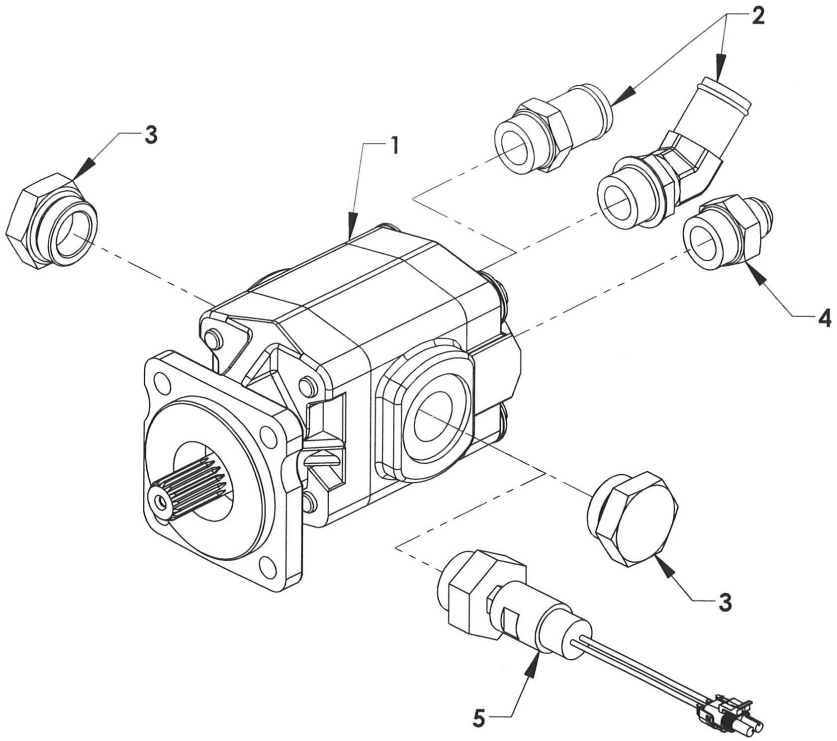

REF	PART#	QTY	DESCRIPTION
1	0320144	1	18 GPM , 1 IN.15 SPLINE SHAFT, SAE 4-BOLT FLANGE
2	03006339	1	#16-45 M O-RING x 1-1/4 M NIPPLE
	77C82	1	#16 M O-RING x 1-1/4 M NIPPLE
3	77620	2	1-1/4 O-RING PLUG 900598-20
4	0301368	1	#16 M O-RING x 3/4 MJIC
5	0909434	1	PRESSURE TRANSDUCER (OPTIONAL)

Section V - PARTS

DIRECT MOUNT PUMP - 18 GPM

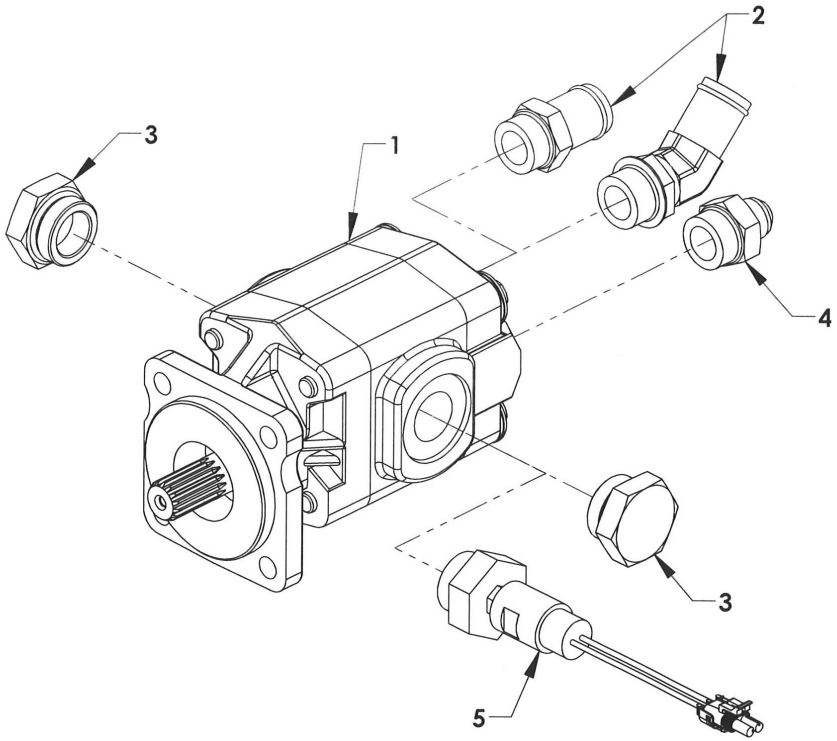

REF	PART#	QTY	DESCRIPTION
1	0320144	1	18 GPM , 1 IN.15 SPLINE SHAFT, SAE 4-BOLT FLANGE
2	03006339	1	#16-45 M O-RING x 1-1/4 M NIPPLE
	77C82	1	#16 M O-RING x 1-1/4 M NIPPLE
3	77620	2	1-1/4 O-RING PLUG 900598-20
4	0301368	1	#16 M O-RING x 3/4 MJIC
5	0909434	1	PRESSURE TRANSDUCER (OPTIONAL)

2 AIR VALVE CONTROL STATION

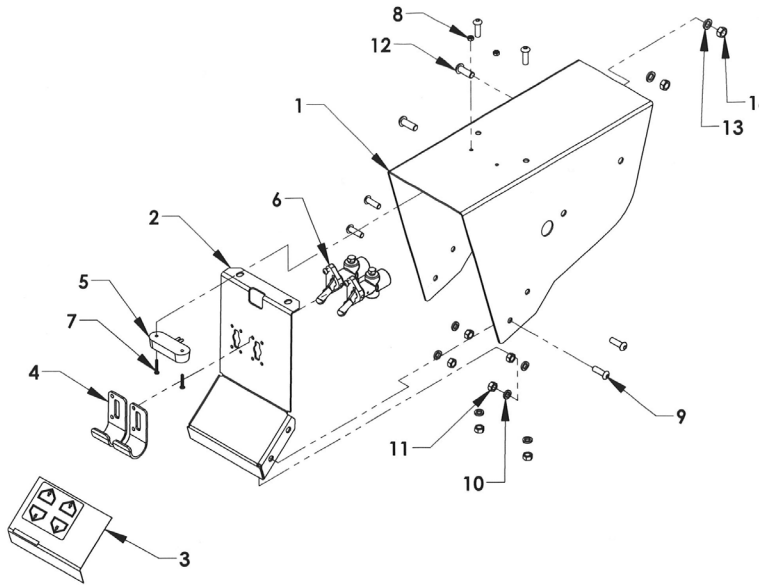

REF.	PART #	QTY	DESCRIPTION
1	0752655	1	2-TOGGLE AIR VALVE CONTROL HOOD
2	0752656L	1	2-TOGGLE AIR VALVE CONTROL PANEL - LEFT
	0752656R	1	2-TOGGLE AIR VALVE CONTROL PANEL - RIGHT
3	18221L	1	2-TOGGLE AIR VALVE CONTROL PLACARD - LEFT
	18221R	1	2-TOGGLE AIR VALVE CONTROL PLACARD - RIGHT
	18238L		2-TOGGLE AIR DUAL WINCH CONTROL PLACARD - LEFT
	18238R		2-TOGGLE AIR DUAL WINCH CONTROL PLACARD - RIGHT
4	18145	2	TOGGLE AIR GUARD
5	0320161	1	CONTROL LIGHT
6	71716	2	TOGGLE AIR VALVE
7	04000281	2	SCREW PRH #6-32 UNC x 7/8 SS
8	0403147	2	NUT, NYLON #6-32 UNC SS
9	0403079	6	BOLT BHCS 5/16-18 UNC x 1 SS
10	0402118	6	LOCK WASHER 5/16 SS
11	0403074	6	NUT,NYLON 5/16-18 UNC SS
12	04001085	2	BOLT HHCS 3/8-16 UNC x 1 SS
13	0402121	2	LOCK WASHER 3/8-16 SS
14	0402122	2	NUT, NYLON 3/8-16 UNC

6-SPOOL CONTROL STATION

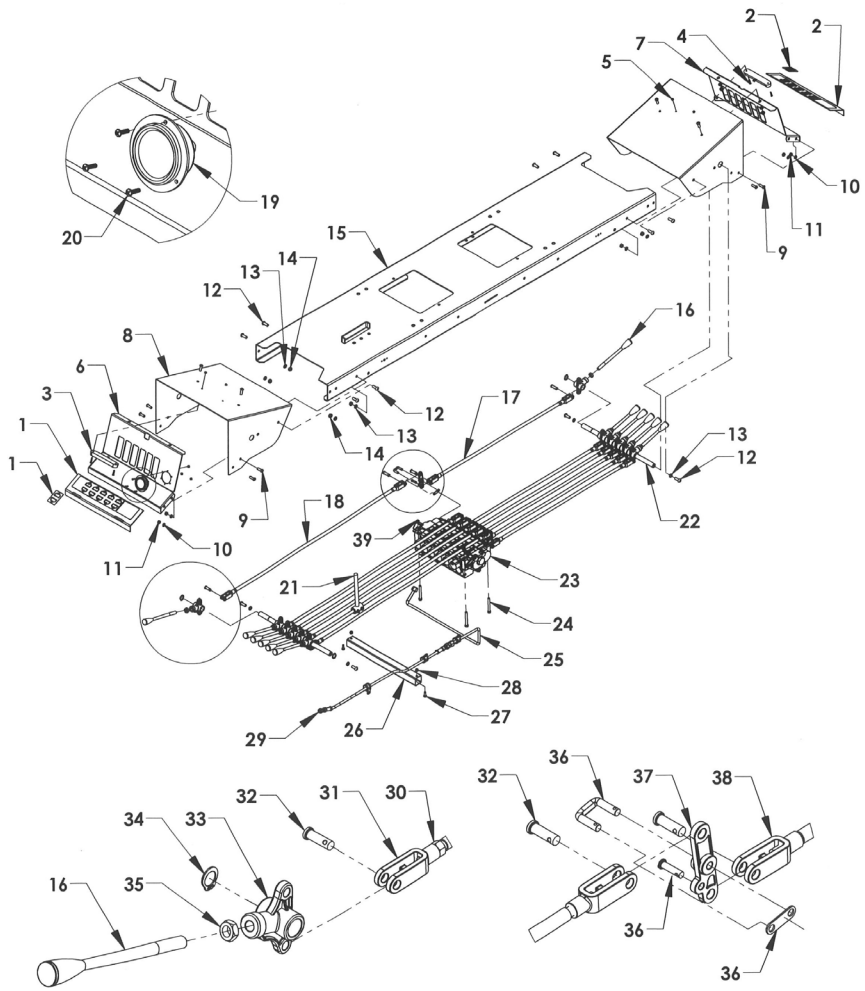

Section V - PARTS

6-SPOOL CONTROL STATION

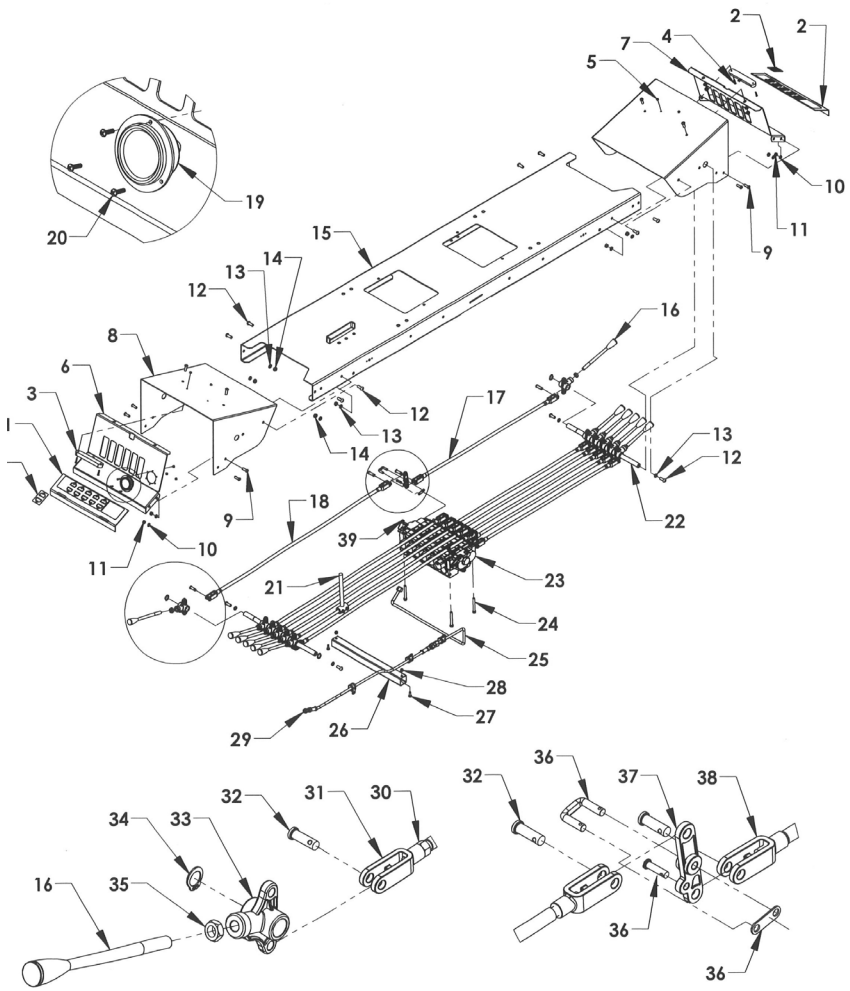

V-46

6-SPOOL CONTROL STATION

REF	PART #	QTY	DESCRIPTION
1	18212L	1	5 SPOOL/6 SPOOL CONTROL PLACARD-LH
	18237	1	CONTROL PLACARD AUTOGRIP OVERLAY
2	18212R	1	5 SPOOL/6 SPOOL CONTROL PLACARD-RH
	18237	1	CONTROL PLACARD AUTOGRIP OVERLAY
3	0320162	2	LED CONTROL STATION LIGHT - 6 IN.
4	04000281	4	SCREW, PHILLIPS #6-32 UNC x 7/8
5	04000262	7	NYLON LOCK NUT #6-32 SS
6	0752652L	1	CONTROL PANEL - LH
7	0752652R	1	CONTROL PANEL - RH
8	0752651	2	CONTROL HOOD
9	0403079	12	BHCS 5/16-18 UNC x 5/8
10	0402118	12	LOCK WASHER 5/16 SS
11	0403074	12	HEX NUT 5/16-18 UNC
12	04001085	12	BHCS 3/8-16 UNC x1 SS
13	0402121	12	LOCK WASHER 3/8 SS
14	0402122	8	NYLON LOCK NUT 3/8-16 UNC
15	181286W	1	CONTROL BOX ARM WELDMENT - 79.5 IN
16	0320048-GY	6	CONTROL HANDLE 8" - GRAY
	0320048-RD	2	CONTROL HANDLE 8" - RED
	0320048-BL	4	CONTROL HANDLE 8" - BLUE
17	7A528W	6	CONTROL ROD 28-1/2
18	7A538W	6	CONTROL ROD 37-3/4
19	0320157	1	PRESSURE GAUGE HYDRAULIC - 2 IN.
20	04000282	6	SCREW PHILLIPS #6-32 x 1/2
21	0809904	1	ANTI-TILT CONTROL ROD WELDMENT
22	7A5753-17	2	CONTROL HANDLE CROSS ROD 3/4 x 17
23	74116	1	VALVE BODY GRESEN 6 SPOOL
	74115	1	VALVE BODY GRESEN 5 SPOOL (COMMON)
24	0403169	3	HHCS 5/16-18 UNC x 2-3/4
25	0752718-5	1	CONTROL STATION GAUGE FLUID TUBE - 5 SP
	0752718-6	1	CONTROL STATION GAUGE FLUID TUBE - 6 SP
26	18335	1	CONTROL STATION WIRE TUBE - 6 SP
27	0400066	2	HHCS 1/4-20 UNC x 3/4
28	0400367	2	NYLON LOCK NUT 1/4-40 UNC
29	0320169	1	PRESSURE GAUGE HOSE
30	0403115	12	NUT 3/8-24 UNF RH
31	84530	12	CLEVIS -RH THREAD 3/8-24
32	84620	24	CLEVIS PIN 3/8 x 1-1/8
33	7A1155	12	CONTROL HANDLE PIVOT BASE
34	86075E	4	SNAP RING 3/4 EXTERNAL
35	0400410	12	1/2-13 UNC JAM NUT ZP
36	7A010	6	CLEVIS PIN AND LINK ASSEMBLY
37	7A121	6	BELL CRANK
38	84540	12	CLEVIS - LH THREAD 3/8-24
39	0400382	3	NYLON LOCK NUT 5/16-18 UNC

9-SPOOL CONTROL STATION

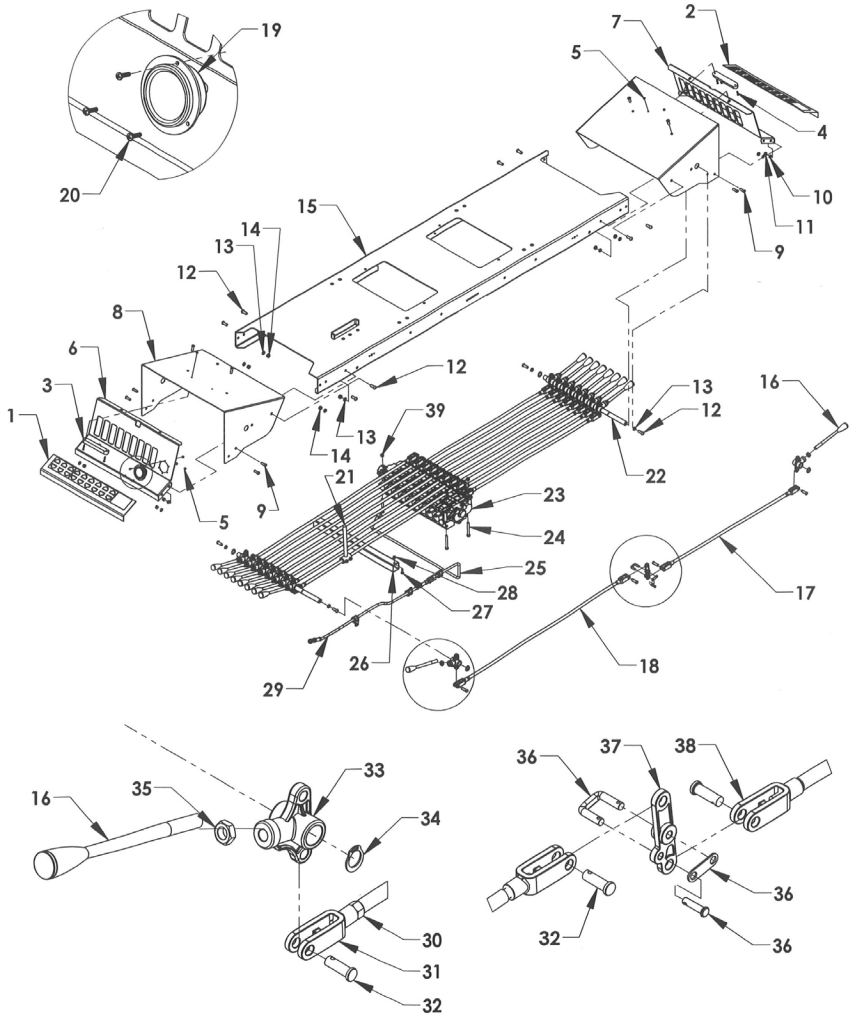

Section V - PARTS

9-SPOOL CONTROL STATION

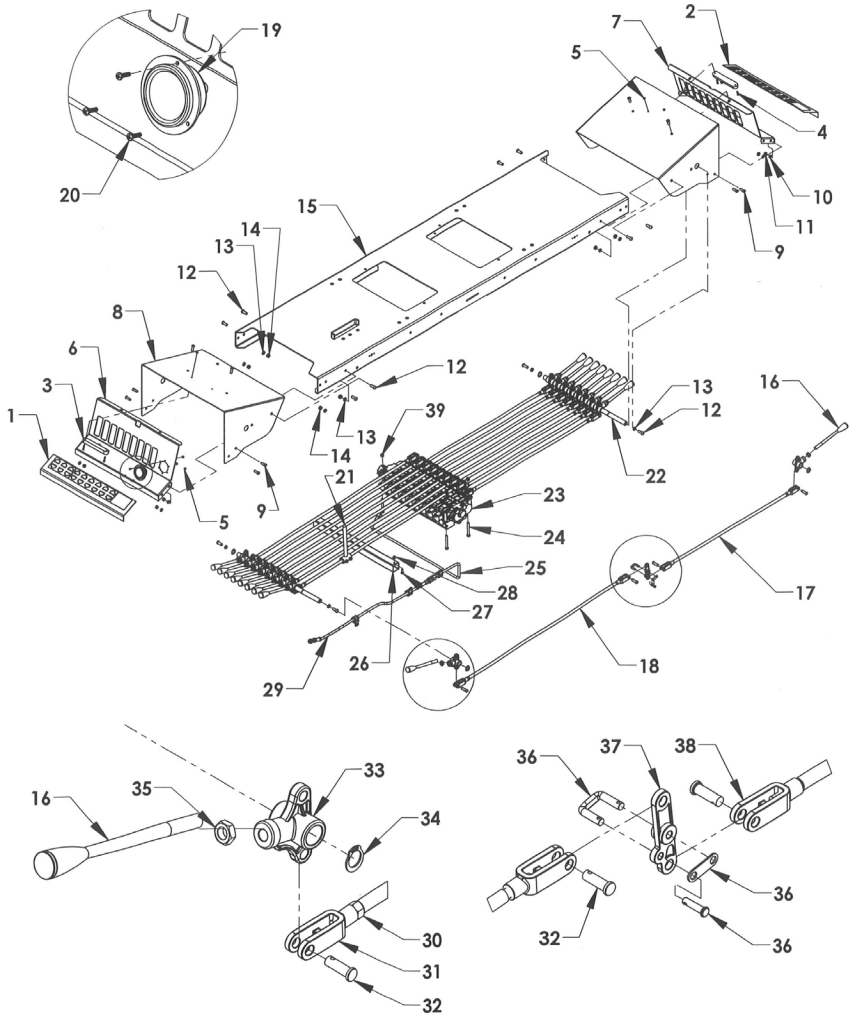

9-SPOOL CONTROL STATION

REF NO.	PART #	QTY	DESCRIPTION
1	18219L	1	CONTROL PLACARD 4-CAR AUTOGRIP - LH
	18218L	1	CONTROL PLACARD 4-CAR CARRIER - LH
	18224L	1	CONTROL PLACARD SIDEPULLER OVERLAY - LH
	18235L	1	CONTROL PLACARD DUAL DECK - LH
	18236L	1	CONTROL PLACARD DUAL DECK AG OVERLAY-LH
2	18219R	1	CONTROL PLACARD 4-CAR AUTOGRIP - RH
	18218R	1	CONTROL PLACARD 4-CAR CARRIER - RH
	18224R	1	CONTROL PLACARD SIDEPULLER OVERLAY-RH
	18235R	1	CONTROL PLACARD DUAL DECK - RH
	18236R	1	CONTROL PLACARD DUAL DECK AG OVERLAY-RH
3	0320162	2	LED CONTROL STATION LIGHT - 6 IN.
4	04000281	4	SCREW, PHILLIPS #6-32 UNC x 7/8
5	04000262	7	NYLON LOCK NUT #6-32 SS
6	0752654L	1	CONTROL PANEL - LH
7	0752654R	1	CONTROL PANEL - RH
8	0752653	2	CONTROL HOOD
9	0403079	12	BHCS 5/16-18 UNC x 5/8
10	0402118	12	LOCK WASHER 5/16, SS
11	0403074	12	HEX NUT 5/16-18 UNC
12	04001085	12	BHCS 3/8-16 UNC x 1, SS
13	0402121	12	LOCK WASHER 3/8 SS
14	0402122	8	NYLON LOCK NUT 3/8-16 UNC
15	181289W	1	CONTROL BOX ARM WELDMENT - 79.5 IN
16	0320048-GY	6	CONTROL HANDLE 8" - GRAY
	0320048-RD	4	CONTROL HANDLE 8" - RED
	0320048-BL	6	CONTROL HANDLE 8" - BLUE
	0320048-GR	2	CONTROL HANDLE 8" - GREEN
17	7A528W	9	CONTROL ROD 28-1/2
18	7A538W	9	CONTROL ROD 37-3/4
19	0320157	1	PRESSURE GAUGE HYDRAULIC - 2 IN.
20	04000282	3	SCREW PHILLIPS #6-32 x 1/2
21	0809904	1	ANTI-TILT CONTROL ROD WELDMENT
22	7A5753-20	2	CONTROL HANDLE CROSS ROD 3/4 x 20-3/4
23	74118	1	VALVE BODY GRESEN 8-SPOOL
	74119	1	VALVE BODY GRESEN 9 SPOOL
24	0403169	3	HHCS 5/16-18 UNC x 2-3/4
25	0752718-8	1	CONTROL STATION GAUGE FLUID TUBE - 8 SP
	0752718-9	1	CONTROL STATION GAUGE FLUID TUBE - 9 SP
26	18336	1	CONTROL STATION WIRE TUBE - 9 SPOOL
27	0400366	2	HHCS 1/4-20 UNC x 3/4
28	0400367	2	NYLON LOCK NUT 1/4-20 UNC
29	0320169	1	PRESSURE GAUGE HOSE
30	0403115	18	NUT 3/8-24 UNF RH
31	84530	18	CLEVIS -RH THREAD 3/8-24
32	84620	36	CLEVIS PIN 3/8 x 1-1/8
33	7A1155	18	CONTROL HANDLE PIVOT BASE
34	86075E	4	SNAP RING 3/4 EXTERNAL
35	0400410	18	1/2-13 UNC JAM NUT ZP
36	7A010	9	CLEVIS PIN AND LINK ASSEMBLY
37	7A121	9	BELL CRANK
38	84540	18	CLEVIS - LH THREAD 3/8-24
39	0400382	3	NYLON LOCK NUT 5/16-18 UNC

REMOTE AIR CYLINDERS 6-SPOOL

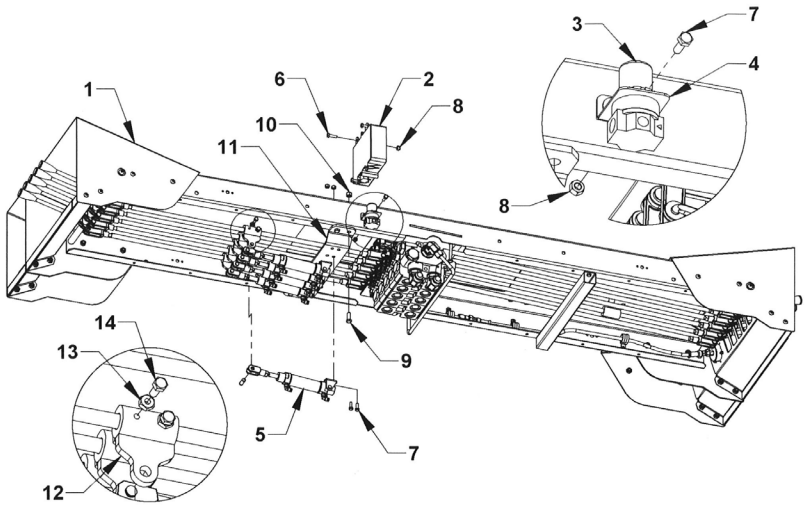

REF. NO.	PART #	QTY	DESCRIPTION
1	183126	1	6-SPOOL CONTROL STATION
2	0308726-2	1	RADIO CONTROL RECEIVER BOX 2-FUNCTION
	0308726-4		RADIO CONTROL RECEIVER BOX 4-FUNCTION
	0308726-6		RADIO CONTROL RECEIVER BOX 6-FUNCTION
	0308726-8		RADIO CONTROL RECEIVER BOX 8-FUNCTION
	0308726-10		RADIO CONTROL RECEIVER BOX 10-FUNCTION
	0308726-12		RADIO CONTROL RECEIVER BOX 12-FUNCTION
	0308726-16		RADIO CONTROL RECEIVER BOX 16-FUNCTION
3	71713	1	AIR PRESSURE REGULATOR
4	0752351	1	AIR PRESSURE REGULATOR MTG BRACKET
5	0308711	X	AIR CYLINDER 2 INCH STROKE
6	0403043	3	BOLT HHCS 1/4-20 UNC x 1 GR5
7	0400066	X	BOLT HHCS 1/4-20 UNC x 3/4 GR5
8	0400367	X	NUT NYLOK 1/4-20 UNC
9	0400126	4	BOLT HHCS 3/8-18 UNC x 1 GR5
10	0400392	4	NUT NYLOC 3/8-16 UNC
11	181381	1	AIR CYLINDER MTG BRKT 6-SPOOL GEN2
12	0809905	X	BOLT-ON AIR CYLINDER PLATE WELDMENT
13	0400366	X	NUT HEX 1/4-20 UNC
14	0400059	X	BOLT HHCS 1/4-20 UNC x 5/8 GR5

Section V - PARTS

REMOTE AIR CYLINDERS 6-SPOOL

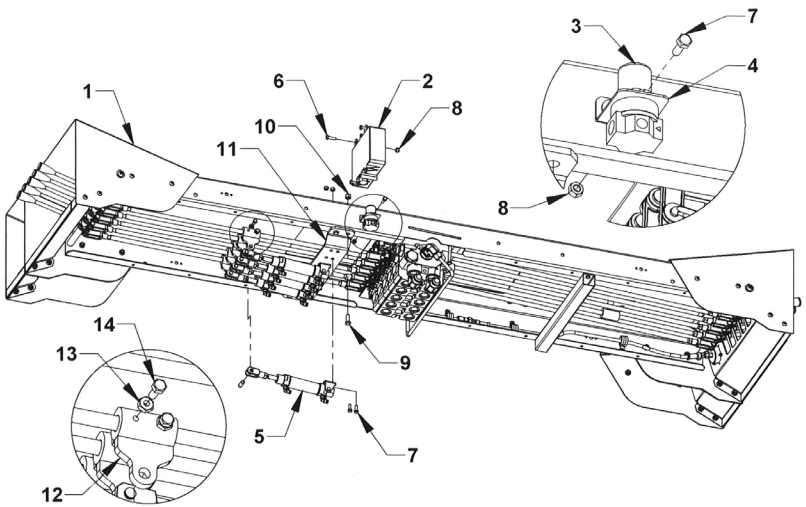

REF. NO.	PART #	QTY	DESCRIPTION
1	183126	1	6-SPOOL CONTROL STATION
2	0308726-2	1	RADIO CONTROL RECEIVER BOX 2-FUNCTION
	0308726-4		RADIO CONTROL RECEIVER BOX 4-FUNCTION
	0308726-6		RADIO CONTROL RECEIVER BOX 6-FUNCTION
	0308726-8		RADIO CONTROL RECEIVER BOX 8-FUNCTION
	0308726-10		RADIO CONTROL RECEIVER BOX 10-FUNCTION
	0308726-12		RADIO CONTROL RECEIVER BOX 12-FUNCTION
	0308726-16		RADIO CONTROL RECEIVER BOX 16-FUNCTION
3	71713	1	AIR PRESSURE REGULATOR
4	0752351	1	AIR PRESSURE REGULATOR MTG BRACKET
5	0308711	X	AIR CYLINDER 2 INCH STROKE
6	0403043	3	BOLT HHCS 1/4-20 UNC x 1 GR5
7	0400066	X	BOLT HHCS 1/4-20 UNC x 3/4 GR5
8	0400367	X	NUT NYLOK 1/4-20 UNC
9	0400126	4	BOLT HHCS 3/8-18 UNC x 1 GR5
10	0400392	4	NUT NYLOC 3/8-16 UNC
11	181381	1	AIR CYLINDER MTG BRKT 6-SPOOL GEN2
12	0809905	X	BOLT-ON AIR CYLINDER PLATE WELDMENT
13	0400366	X	NUT HEX 1/4-20 UNC
14	0400059	X	BOLT HHCS 1/4-20 UNC x 5/8 GR5

REMOTE AIR CYLINDERS 9-SPOOL

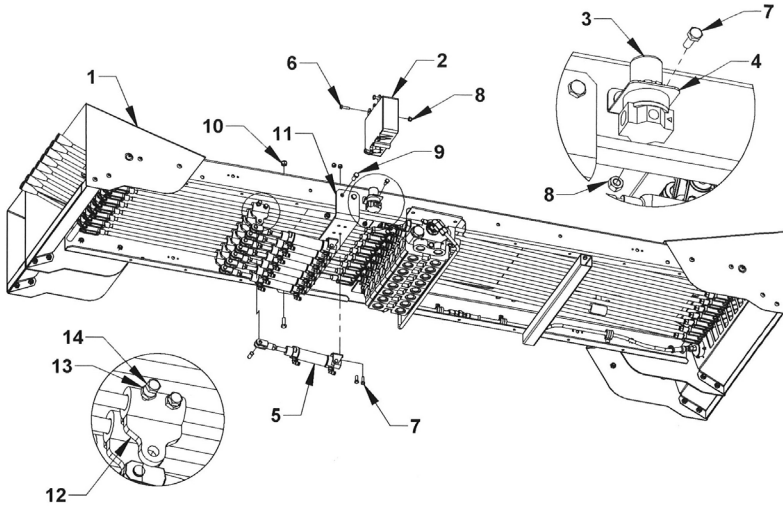

REF. NO.	PART #	QTY	DESCRIPTION
1	183129	1	9-SPOOL CONTROL STATION
2	0308726-2	1	RADIO CONTROL RECEIVER BOX 2-FUNCTION
	0308726-4		RADIO CONTROL RECEIVER BOX 4-FUNCTION
	0308726-6		RADIO CONTROL RECEIVER BOX 6-FUNCTION
	0308726-8		RADIO CONTROL RECEIVER BOX 8-FUNCTION
	0308726-10		RADIO CONTROL RECEIVER BOX 10-FUNCTION
	0308726-12		RADIO CONTROL RECEIVER BOX 12-FUNCTION
	0308726-16		RADIO CONTROL RECEIVER BOX 16-FUNCTION
3	71713	1	AIR PRESSURE REGULATOR
4	0752351	1	AIR PRESSURE REGULATOR MTG BRACKET
5	0308711	X	AIR CYLINDER 2 INCH STROKE
6	0403043	3	BOLT HHCS 1/4-20 UNC x 1 GR5
7	0400066	X	BOLT HHCS 1/4-20 UNC x 3/4 GR5
8	0400367	X	NUT NYLOK 1/4-20 UNC
9	0400126	4	BOLT HHCS 3/8-18 UNC x 1 GR5
10	0400392	4	NUT NYLOK 3/8-16 UNC
11	181391	1	AIR CYLINDER MTG BRKT 9-SPOOL GEN2
12	0809905	X	BOLT-ON AIR CYLINDER PLATE WELDMENT
13	0400366	X	NUT HEX 1/4-20 UNC
14	0400059	X	BOLT HHCS 1/4-20 UNC x 5/8 GR5

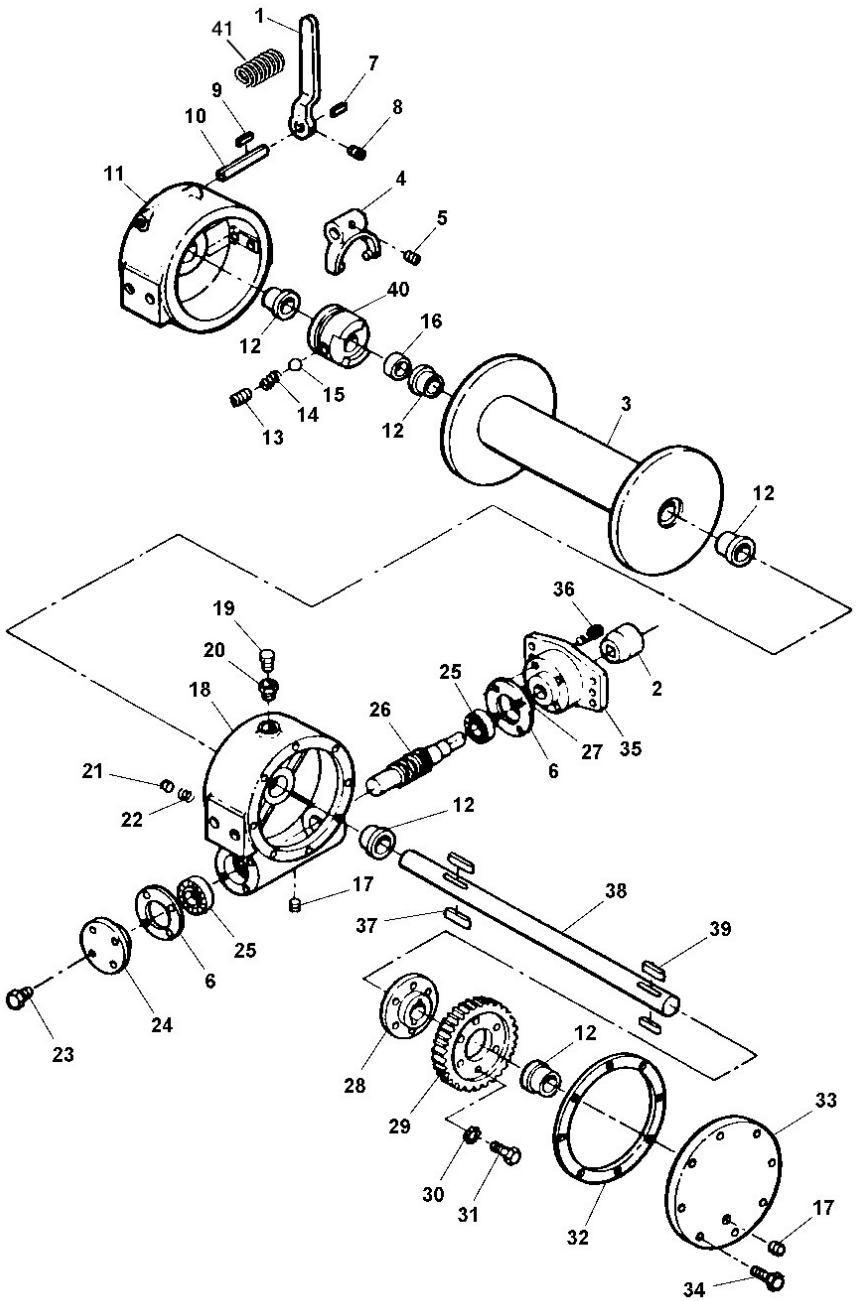

Section V - PARTS
RAMSEY 234 HYDRAULIC WINCH

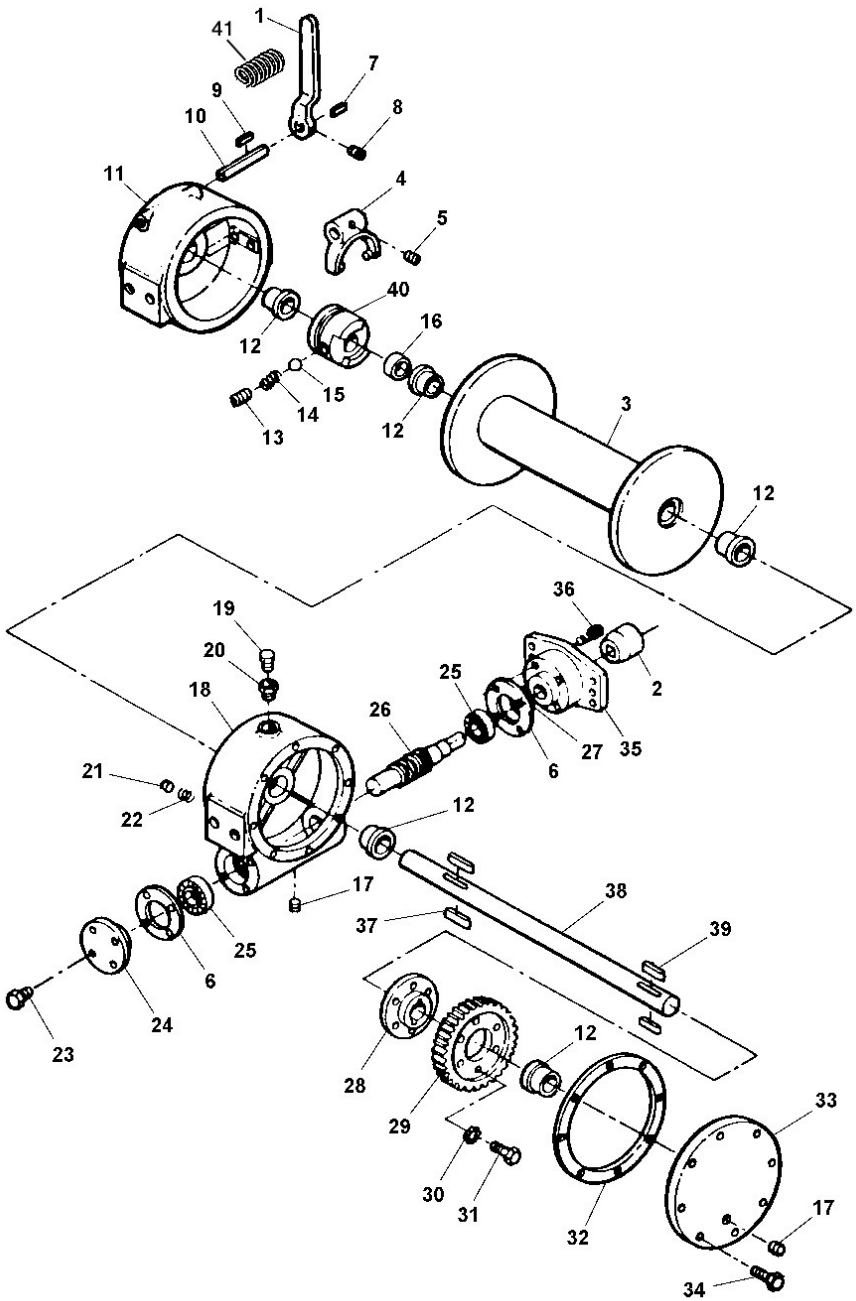

V-52

RAMSEY 234 HYDRAULIC WINCH

REF. NO.	NO. REQ'D	PART NUMBER	DESCRIPTION
1	1	0300261	LEVER
2	1	0300290	COUPLING
3	1	0300381	DRUM
4	1	0300398	YOKE
5	1	0300399	SCREW
6	2	0300447	GASKET
7	1	0300448	KEY
8	1	0300449	SCREW
9	1	0300450	KEY
10	1	0300451	SHAFT
11	1	0300452	CLUTCH HOUSING
12	5	0300453	BUSHING
13	1	0300454	SCREW
14	1	0300455	SPRING
15	1	0300456	BALL
16	1	0300458	SPACER
17	2	0300459	PLUG
18	1	0300460	HOUSING
19	1	0300461	PLUG
20	1	0300462	REDUCER
21	1	0300463	DRAG BRAKE
22	1	0300464	SPRING
23	16	0300465	SCREW
24	1	0300466	CAP
25	2	0300467	BEARING
26	1	0300468	WORM
27	1	0300471	SEAL
28	1	0300472	HUB
29	1	0300473	GEAR
30	6	0300474	WASHER
31	6	0300475	SCREW
32	1	0300476	GASKET
33	1	0600477	COVER
34	4	0300569	SCREW
35	1	0300694	CAP ADAPTOR
36	1	0300695	SCREW
37	2	--	KEY
38	1	--	SHAFT
39	2	--	KEY
40	1	--	CLUTCH
41	1	0308608	TORSION SPRING
*	1	0308698	4 TON WORM WINCH ASSEMBLY

* When ordering specify winch serial number.

RAMSEY HD234 MANUAL-SHIFT WINCH GROUP W/SINGLE CLUTCH CONTROL ROD ASSEMBLY (UNDERWIND)

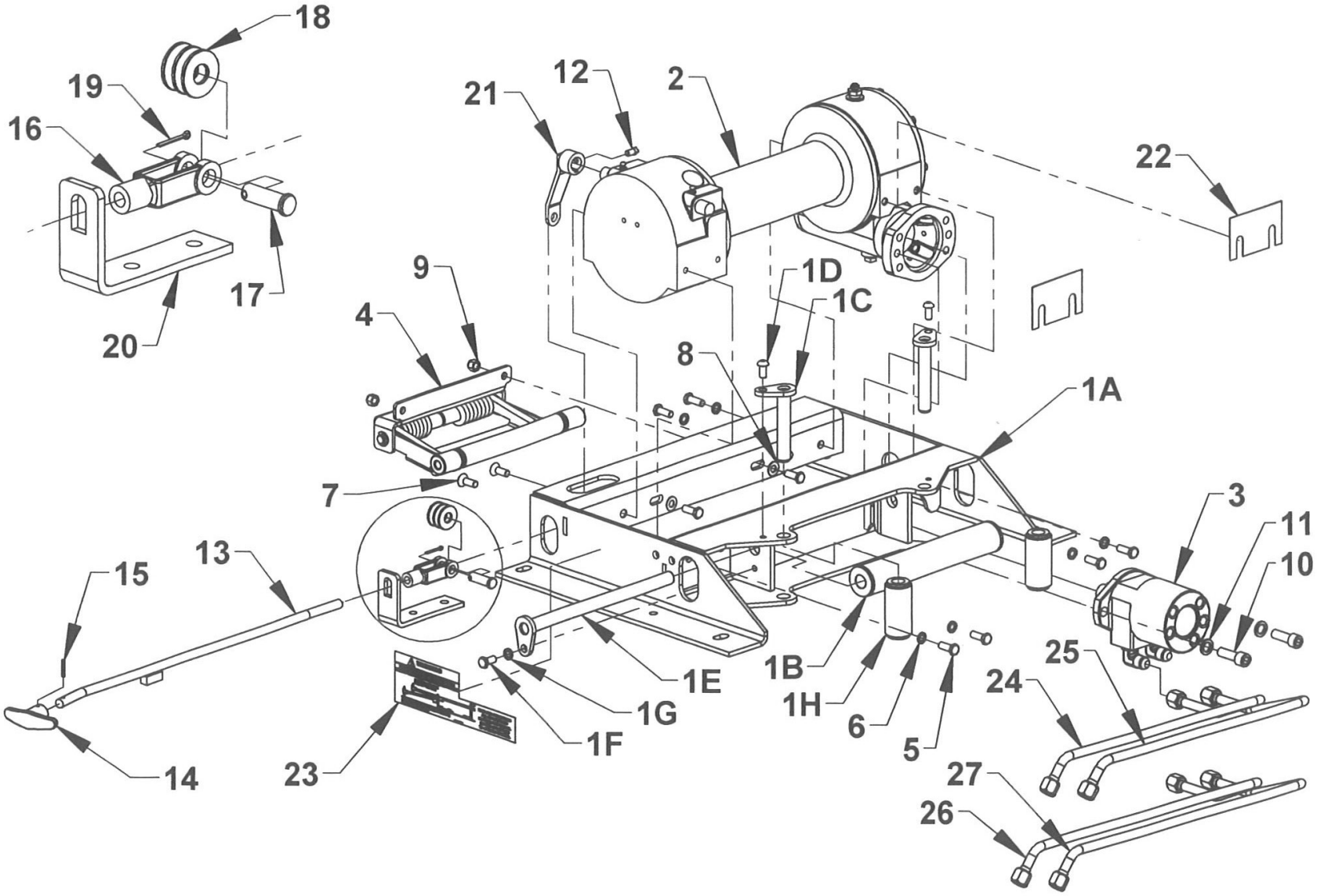

RAMSEY HD234 MANUAL-SHIFT WINCH GROUP W/SINGLE CLUTCH CONTROL ROD ASSEMBLY (UNDERWIND)

REF. NO.	PART #	QTY	DESCRIPTION
1	0940425	1	RAMSEY HD234 WINCH MTG FRAME-GEN2
1A	0811139	1	RAMSEY HD234 WINCH MOUNTING FRAME
1B	0940428	1	ROLLER ASSEMBLY - 1-3/4 DIAMETER
1C	0811142	1	VERTICAL ROLLER KEEPER PIN - RAMSEY 8K
1D	0403004	2	BOLT- BHCS 3/8-16 UNC x 3/4 ZP
1E	0811145	2	ROLLER GUIDE KEEPER PIN - RAMSEY 8K WORM
1F	0400121	1	BOLT- HHCS 3/8-16 UNC x 3/4 ZP
1G	0400482	1	LOCK WASHER 3/8 ZP
1H	0709877G	2	RAMSEY HD234 VERTICAL ROLLER W/BUSHINGS
2	0308698	1	RAMSEY WINCH HD234 LEVER LOCK MANUAL SHIFT
3	0320147	1	WINCH MOTOR 5 CUBIC INCH
4	03020146	1	RAMSEY ROLLER TENSIONER-HD234
5	0400126	8	BOLT- HHCS 3/8-16 UNC x 1 ZP
6	0400482	6	LOCK WASHER 3/8 ZP
7	0403137	2	BOLT FHSCS 3/8-16 x 1 GRB
8	0400480	2	FLAT WASHER 3/8 ZP
9	0400392	2	NUT NYLOC 3/8-16 ZP
10	0400238	2	BOLT SHCS 1/2-13 x 1-1/2 GRB
11	0400491	2	LOCK WASHER 1/2 ZP
12	0400116	1	SET SCREW SQHD 5/16-18 x 1/2 ZP
13	0805170	1	RAMSEY WINCH CLUTCH CONTROL ROD
14	0301532	1	MILLER T-HANDLE
15	0400560	1	ROLL PIN 5/32 x 1
16	0301588	1	ADJUSTABLE YOKE
17	0400537	1	CLEVIS PIN 1/2 x 1-1/2 ZP
18	0400492	3	WASHER 1/2 FLAT
19	0400540	1	COTTER PIN 3/32 x 1
20	0710918	1	RAMSEY CLUTCH HANDLE MOUNTING ANGLE
21	0805151	1	BELL CRANK ARM
22	0701172-18	2	SHIM-RAMSEY HD234
23	0500815	1	WINCH SAFETY DECAL
24	0752167-R	1	S10-16 CNV RAMSEY HD234 FLUID TUBE-SHORT
25	0752168-R	1	S10-16 CNV RAMSEY HD234 FLUID TUBE-LONG
26	0751974-R	1	S12-16 LCG RAMSEY HD234 FLUID TUBE-SHORT
27	0751975-R	1	S12-16 LCG RAMSEY HD234 FLUID TUBE-LONG

RAMSEY HD234 MANUAL-SHIFT WINCH GROUP WITH DUAL CLUTCH CONTROL ROD ASSEMBLY

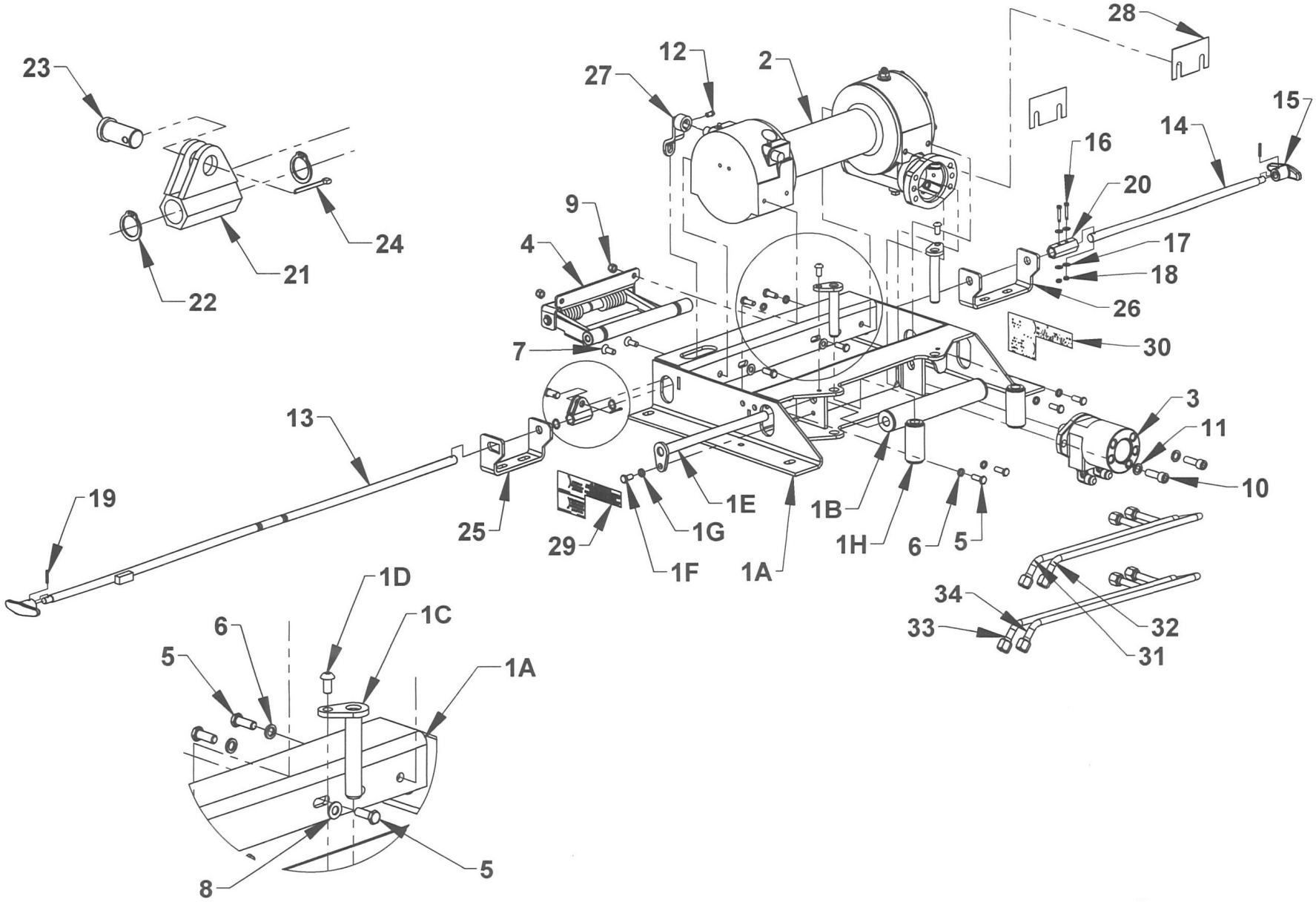

RAMSEY HD234 MANUAL-SHIFT WINCH GROUP WITH DUAL CLUTCH CONTROL ROD ASSEMBLY

REF. NO.	PART #	QTY	DESCRIPTION
1	0940425	1	RAMSEY HD234 WINCH MTG FRAME-GEN2
1A	0811139	1	RAMSEY HD234 WINCH MOUNTING FRAME
1B	0940428	1	ROLLER ASSEMBLY - 1-3/4 DIAMETER
1C	0811142	2	VERTICAL ROLLER KEEPER PIN - RAMSEY 8K
1D	0403004	2	BOLT- BHCS 3/8-16 UNC x 3/4 ZP
1E	0811145	1	ROLLER GUIDE KEEPER PIN - RAMSEY 8K WORM
1F	0400121	1	BOLT- HHCS 3/8-16 UNC x 3/4 ZP
1G	0400482	1	LOCK WASHER 3/8 ZP
1H	0709877G	2	RAMSEY HD234 VERTICAL ROLLER W/BUSHINGS
2	0308698	1	RAMSEY WINCH HD234 LEVER LOCK MANUAL SHIFT
3	0320147	1	WINCH MOTOR 5 CUBIC INCH
4	03020146	1	RAMSEY ROLLER TENSIONER-HD234
5	0400126	8	BOLT- HHCS 3/8-16 UNC x 1 ZP
6	0400482	6	LOCK WASHER 3/8 ZP
7	0403137	2	BOLT FHSCS 3/8-16 x 1 GRB
8	0400480	2	FLAT WASHER 3/8 ZP
9	0400392	2	NUT NYLOC 3/8-16 ZP
10	0400238	2	BOLT SHCS 1/2-13 x 1-1/2 GRB
11	0400491	2	LOCK WASHER 1/2 ZP
12	0400116	1	SET SCREW SQHD 5/16-18 x 1/2 GRB
13	08002469	1	DUAL CLUTCH HANDLE ROD - 45"
14	07004181	1	DUAL CLUTCH HANDLE ROD - 19"
15	0301532	2	MILLER T-HANDLE
16	0403170	2	BOLT SSB #10 x 1 #8-32 SS
17	0403005	4	FLAT WASHER #10 SS
18	04003908	2	NUT #8-32 HEX NYLOC SS
19	0400560	2	ROLL PIN 5/32 x 1
20	07004182	1	DUAL CLUTCH CONTROL ROD COUPLING
21	08002489	1	DUAL CLUTCH HANDLE BUSHING
22	86062E	2	SNAP RING 5/8 EXTERNAL
23	04000341	1	CLEVIS PIN 1/2 x 1 ZP
24	0400540	1	COTTER PIN 3/32 x 1
25	07004164	1	DUAL CLUTCH HANDLE MTG ANGLE - LH
26	07004165	1	DUAL CLUTCH HANDLE MTG ANGLE - RH
27	08002468	1	DUAL HANDLE CLUTCH CRANK ARM
28	0701172-18	2	SHIM-RAMSEY HD234
29	05000522L	1	WINCH SAFETY DECAL - LH
30	0500522R	1	WINCH SAFETY DECAL - RH
31	0752167-R	1	S10-16 CNV RAMSEY HD234 FLUID TUBE-SHORT
32	0752168-R	1	S10-16 CNV RAMSEY HD234 FLUID TUBE-LONG
33	0751974-R	1	S12-16 LCG RAMSEY HD234 FLUID TUBE-SHORT
34	0751975-R	1	S12-16 LCG RAMSEY HD234 FLUID TUBE-LONG

RAMSEY HD234 AIR-SHIFT WINCH GROUP

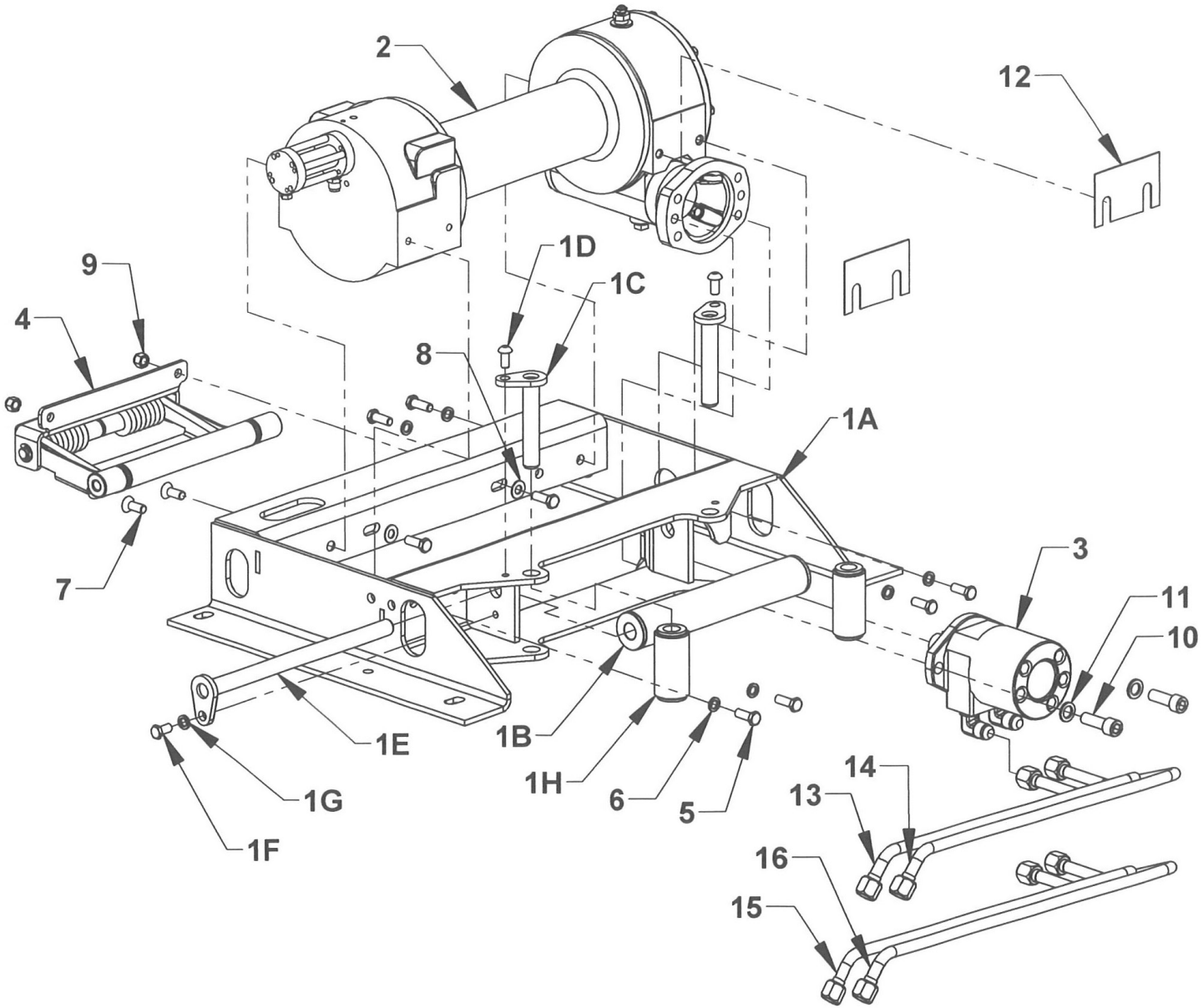

RAMSEY HD234 AIR-SHIFT WINCH GROUP

REF. NO.	PART #	QTY	DESCRIPTION
1	0940425	1	RAMSEY HD234 WINCH MTG FRAME-GEN2
1A	0811139	1	RAMSEY HD234 WINCH MOUNTING FRAME
1B	0940428	1	ROLLER ASSEMBLY - 1-3/4 DIAMETER
1C	0811142	2	VERTICAL ROLLER KEEPER PIN - RAMSEY 8K
1D	0403004	2	BOLT- BHCS 3/8-16 UNC x 3/4 ZP
1E	0811145	1	ROLLER GUIDE KEEPER PIN - RAMSEY 8K WORM
1F	0400121	1	BOLT- HHCS 3/8-16 UNC x 3/4 ZP
1G	0400482	1	LOCK WASHER 3/8 ZP
1H	0709877G	2	RAMSEY HD234 VERTICAL ROLLER W/BUSHINGS
2	0308535	1	RAMSEY WINCH HD234 SHIFT
3	0320147	1	WINCH MOTOR 5 CUBIC INCH
4	03020146	1	RAMSEY ROLLER TENSIONER-HD234
5	0400126	8	BOLT- HHCS 3/8-16 UNC x 1 ZP
6	0400482	6	LOCK WASHER 3/8 ZP
7	0403137	2	BOLT FHSCS 3/8-16 x 1 GRB
8	0400480	2	FLAT WASHER 3/8 ZP
9	0400392	2	NUT NYLOCK 3/8-16 ZP
10	0400238	2	BOLT SHCS 1/2-13 x 1-1/2 GRB
11	0400491	2	LOCK WASHER 1/2 ZP
12	0701172-18	2	SHIM-RAMSEY HD234
13	0752167-R	1	S10-16 CNV RAMSEY HD234 FLUID TUBE-SHORT
14	0752168-R	1	S10-16 CNV RAMSEY HD234 FLUID TUBE-LONG
15	0751974-R	1	S12-16 LCG RAMSEY HD234 FLUID TUBE-SHORT
16	0751975-R	1	S12-16 LCG RAMSEY HD234 FLUID TUBE-LONG

RAMSEY WINCH - 0940421-0810AM
8K SIERRA PLANETARY MANUAL SHIFT

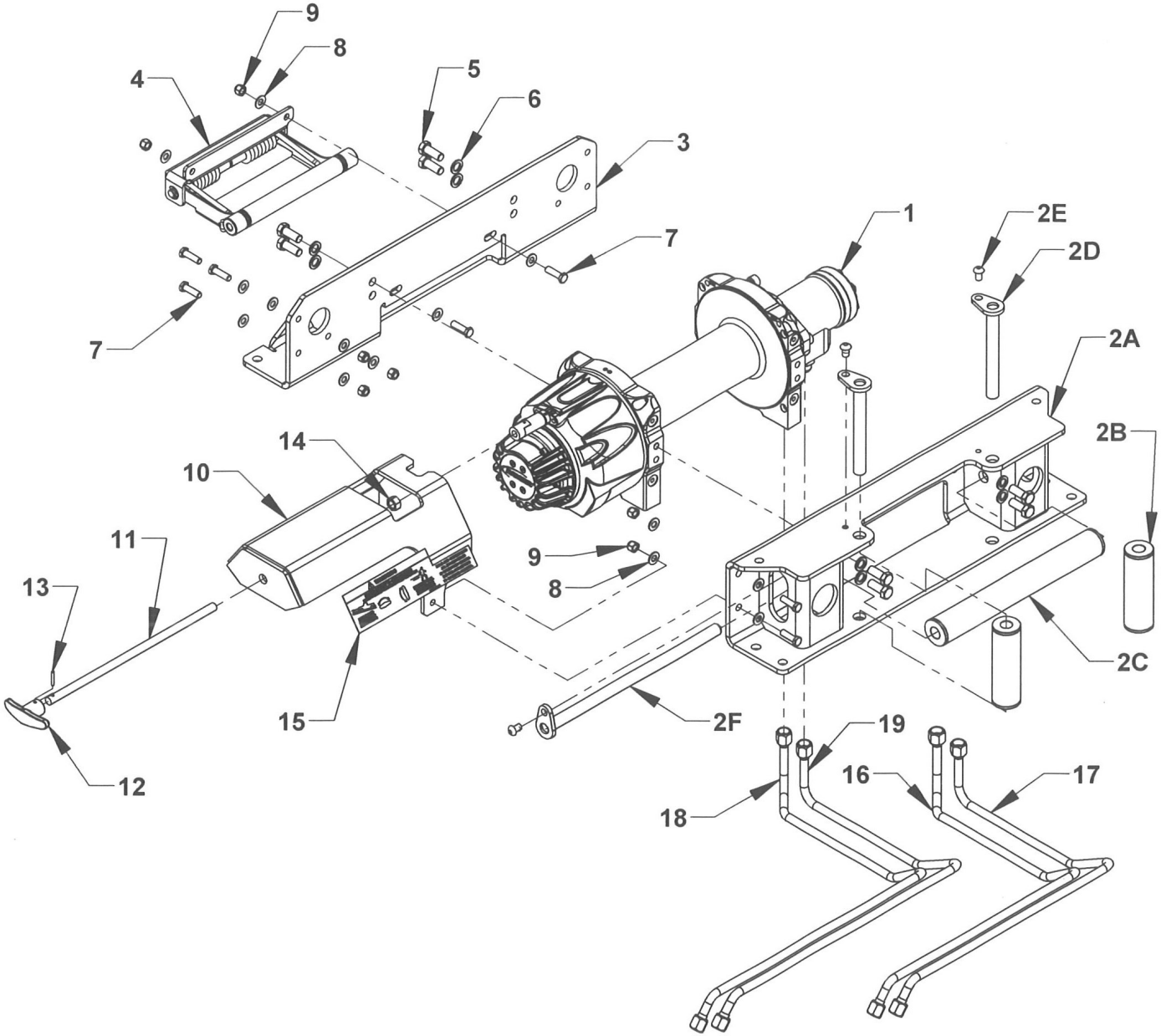

RAMSEY WINCH - 0940421-0810AM
8K SIERRA PLANETARY MANUAL SHIFT

REF. NO.	PART #	QTY	DESCRIPTION
1	0320127-0810AM	1	RAMSEY SIERRA 8K PLANETARY WINCH
2	0940422	1	RAMSEY SIERRA ROLLER GUIDE ASSEMBLY
2A	0811127	1	RAMSEY SIERRA ROLLER GUIDE
2B	0809640	2	ROLLER ASSEMBLY - 1.75 DIAMETER
2C	A901520	1	ROLLER ASSEMBLY - 1.75 DIAMETER
2D	0809641	2	ROLLER GUIDE KEEPER PIN
2E	0403161	3	BOLT 3/8-16 UNC x 5/8 BUTTON HEAD
2F	A901525	1	ROLLER GUIDE KEEPER PIN
3	0811128	1	RAMSEY SIERRA FRONT MTG CHANNEL
4	03019524	1	SIERRA CABLE TENSIONER GEN 2
5	04010209	8	BOLT SOC M12-1.75X25mm
6	0400491	8	WASHER 1/2 LOCK
7	0400122	7	BOLT SOC M12 1.75X25mm
8	0400480	14	FLAT WASHER 3/8 SAE ZP
9	0400392	7	NYLON LOCK NUT 3/8-16 UNC
10	08011591	7	RAMSEY SIERRA T-HANDLE SUPPORT BRKT
11	0752684	1	RAMSEY SIERRA REMOTE CLUTCH ROD
12	0301532	1	MILLER T- HANDLE
13	0400560	1	ROLL PIN 1/8 x 7/8
14	0400407	1	NUT HEX 1/2
15	05002123	1	FREE SPOOL DECAL RAMSEY SIERRA
16	0752167-RS08	1	S10-16 CNV SIERRA FLUID TUBE-SHORT
17	0752168-RS08	1	S10-16 CNV SIERRA FLUID TUBE-LONG
18	0751974-RS08	1	S12-16 LCG SIERRA FLUID TUBE-SHORT
19	0751975-RS08	1	S12-16 LCG SIERRA FLUID TUBE-LONG

RAMSEY WINCH - 0940421-0810AM
8K SIERRA PLANETARY MANUAL SHIFT
DUAL HANDLE CLUTCH CONTROL ROD ASSEMBLY

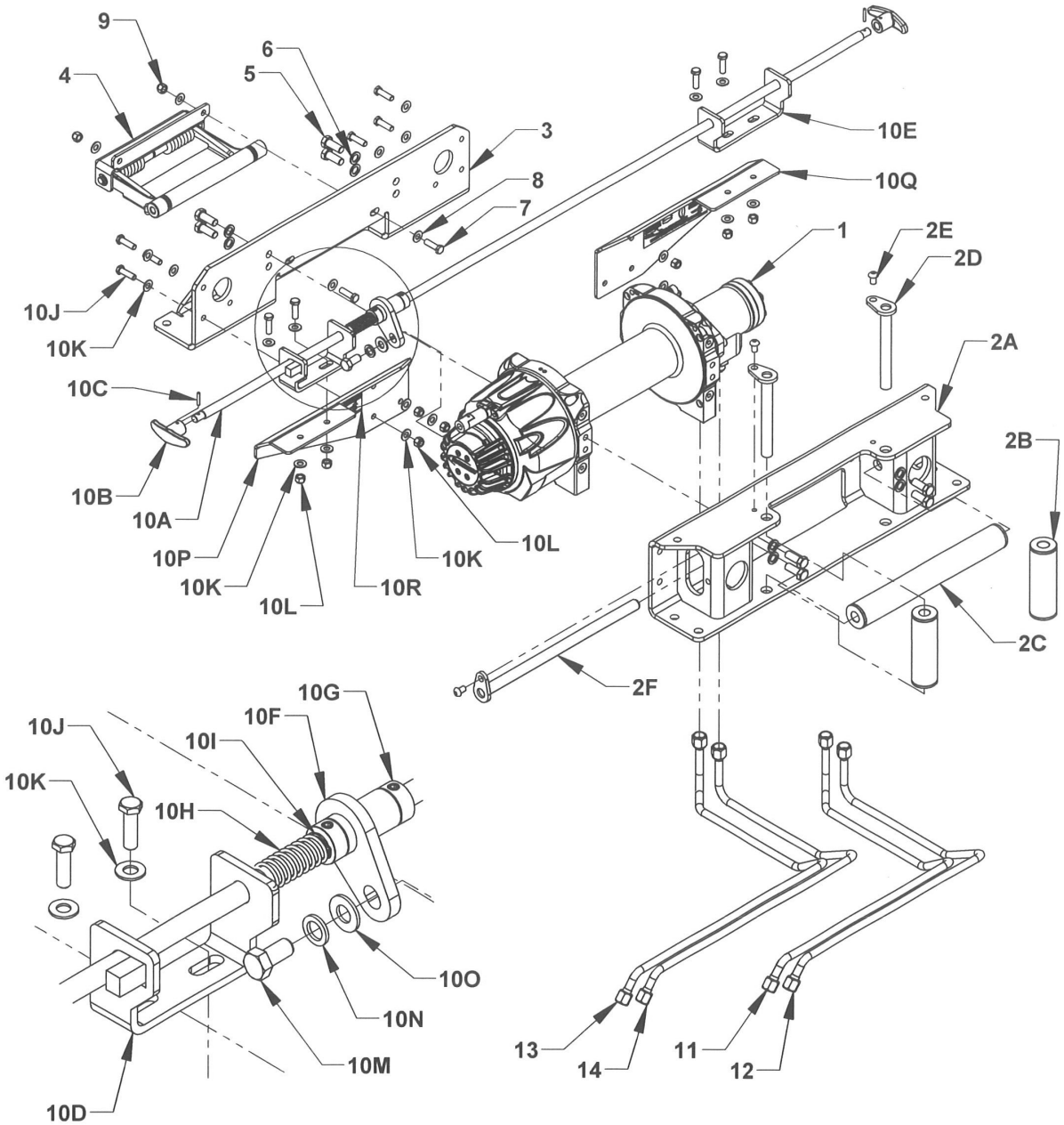

RAMSEY WINCH - 0940421-0810AM
8K SIERRA PLANETARY MANUAL SHIFT
DUAL HANDLE CLUTCH CONTROL ROD ASSEMBLY

REF NO.	PART #	QTY	DESCRIPTION
1	0320127-0810AM	1	RAMSEY SIERRA 8K PLANETARY WINCH
2	0940422	1	RAMSEY SIERRA ROLLER GUIDE ASSEMBLY
2A	0811127	1	RAMSEY SIERRA ROLLER GUIDE
2B	0809640	2	ROLLER ASSEMBLY - 1.75 DIAMETER
2C	A901520	1	ROLLER ASSEMBLY - 1.75 DIAMETER
2D	0809641	2	ROLLER GUIDE KEEPER PIN
2E	0403161	3	BOLT 3/8-16 UNC x 5/8 BUTTON HEAD
2F	A901525	1	ROLLER GUIDE KEEPER PIN
3	0811128	1	RAMSEY SIERRA FRONT MTG CHANNEL
4	03019524	1	SIERRA CABLE TENSIONER GEN 2
5	04010209	8	BOLT SOC M12-1.75X25mm
6	0400491	8	WASHER 1/2 LOCK
7	0400122	2	BOLT HHCS 3/8-16 UNC x 1-1/4
8	0400480	4	FLAT WASHER 3/8 SAE ZP
9	0400392	2	NYLON LOCK NUT 3/8-16 UNC
10	09011048	1	RAMSEY SIERRA DUAL HANDLE ROD ASSEM
10A	08009068	1	SIERRA DUAL HANDLE CONTROL ROD - 64"
10B	0301532	2	MILLER T- HANDLE
10C	0400560	2	ROLL PIN 5/32 x 1
10D	07021447	1	DUAL CLUTCH HANDLE MTG CHANNEL - LH
10E	07004165	1	DUAL CLUTCH HANDLE MTG CHANNEL - RH
10F	08009269	1	DUAL HANDLE KEEPER BUSHING
10G	03012489	2	SET SCREW COLLAR 5/8 SHAFT, 5/16-18 x 1/4 SET SCREW
10H	03012928	1	SPRING COMPRESSION 3 x .875 OD x .091" WIRE DIA.
10I	86062E	2	SNAP RING 5/8 EXTERNAL
10J	0400122	10	BOLT HHCS 3/8-16 UNC x 1-1/4
10K	0400480	20	FLAT WASHER 3/8 SAE ZP
10L	0400392	10	NYLON LOCK NUT 3/8-16 UNC
10M	0400176	1	BOLT HHS 1/2-13 UNC x 1
10N	0400491	1	WASHER 1/2 LOCK
10O	0403040	1	FLAT WASHER 1/2 SAE ZP
10P	07014129L	1	RAMSEY SIERRA DUAL HANDLE MTG BRACKET - LH
10Q	07014129R	1	RAMSEY SIERRA DUAL HANDLE MTG BRACKET - RH
10R	05001603	2	FREE SPOOL DECAL RAMSEY SIERRA DUAL HANDLE
11	0752167-RS08	1	S10-16 CNV SIERRA FLUID TUBE-SHORT
12	0752168-RS08	1	S10-16 CNV SIERRA FLUID TUBE-LONG
13	0751974-RS08	1	S12-16 LCG SIERRA FLUID TUBE-SHORT
14	0751975-RS08	1	S12-16 LCG SIERRA FLUID TUBE-LONG

RAMSEY WINCH - 0940421-0810AA
8K SIERRA PLANETARY AIR SHIFT

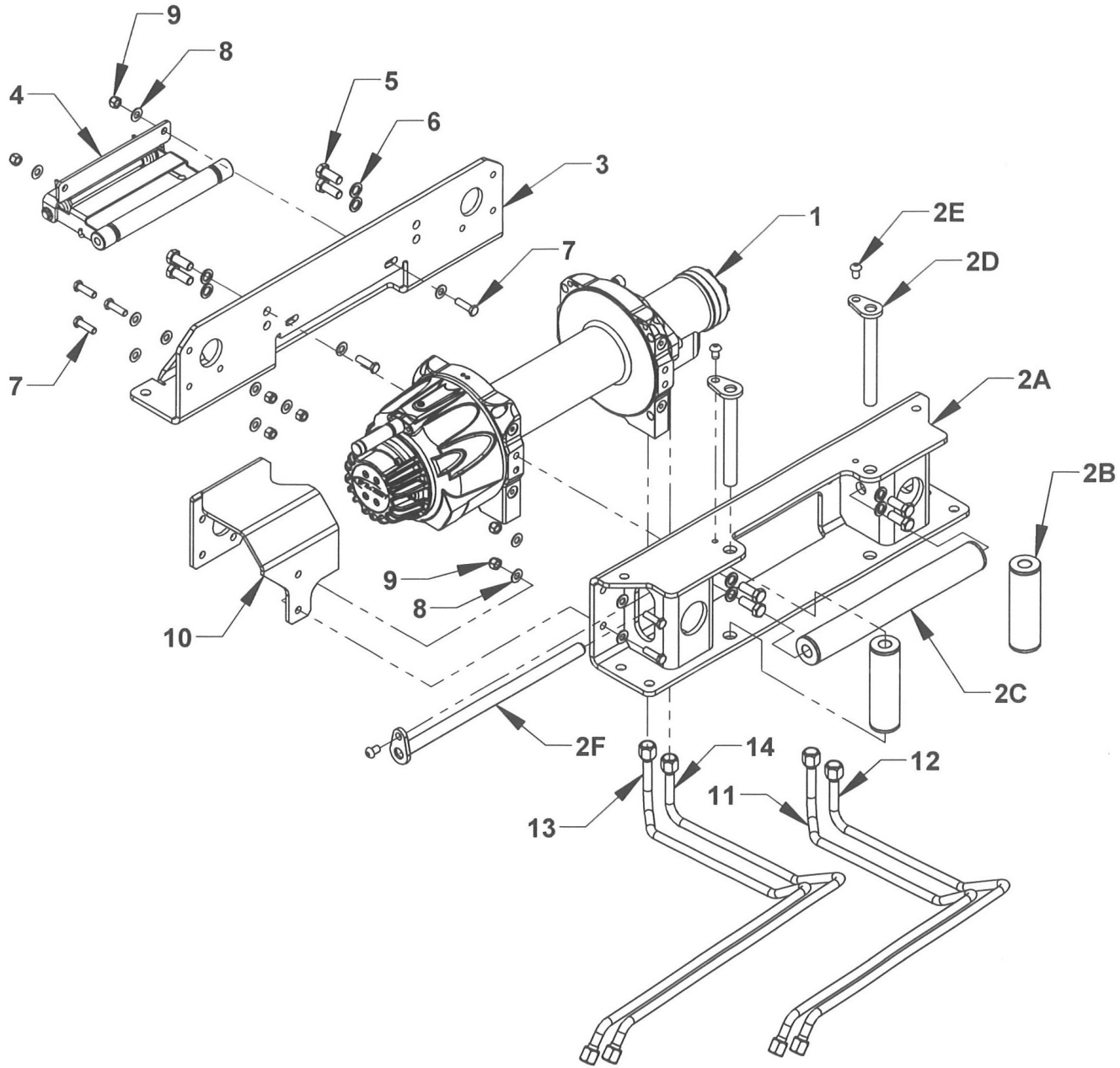

RAMSEY WINCH - 0940421-0810AA
8K SIERRA PLANETARY AIR SHIFT

REF. NO.	PART #	QTY	DESCRIPTION
1	0320127-0810AA	1	RAMSEY SIERRA 8K PLANETARY WINCH
2	0940422	1	RAMSEY SIERRA ROLLER GUIDE ASSEMBLY
2A	0811127	1	RAMSEY SIERRA ROLLER GUIDE
2B	0809640	2	ROLLER ASSEMBLY - 1.75 DIAMETER
2C	A901520	1	ROLLER ASSEMBLY - 1.75 DIAMETER
2D	0809641	2	ROLLER GUIDE KEEPER PIN
2E	0403161	3	BOLT 3/8-16 UNC x 5/8 BUTTON HEAD
2F	A901525	1	ROLLER GUIDE KEEPER PIN
3	0811128	1	RAMSEY SIERRA FRONT MTG CHANNEL
4	03019524	1	SIERRA CABLE TENSIONER GEN 2
5	04010209	8	BOLT SOC M12-1.75X25mm
6	0400491	8	WASHER 1/2 LOCK
7	0400122	7	BOLT HHCS 3/8-16 UNC x 1-1/4
8	0400480	14	FLAT WASHER 3/8 SAE ZP
9	0400392	7	NYLON LOCK NUT 3/8-16 UNC
10	07005433	1	RAMSEY SIERRA AIR CYLINDER GUARD
11	0752167-RS08	1	S10-16 CNV SIERRA FLUID TUBE-SHORT
12	0752168-RS08	1	S10-16 CNV SIERRA FLUID TUBE-LONG
13	0751974-RS08	1	S12-16 LCG SIERRA FLUID TUBE-SHORT
14	0751975-RS08	1	S12-16 LCG SIERRA FLUID TUBE-LONG

RAMSEY WINCH - 09023899-0810AM
8K OMEGA PLANETARY MANUAL SHIFT

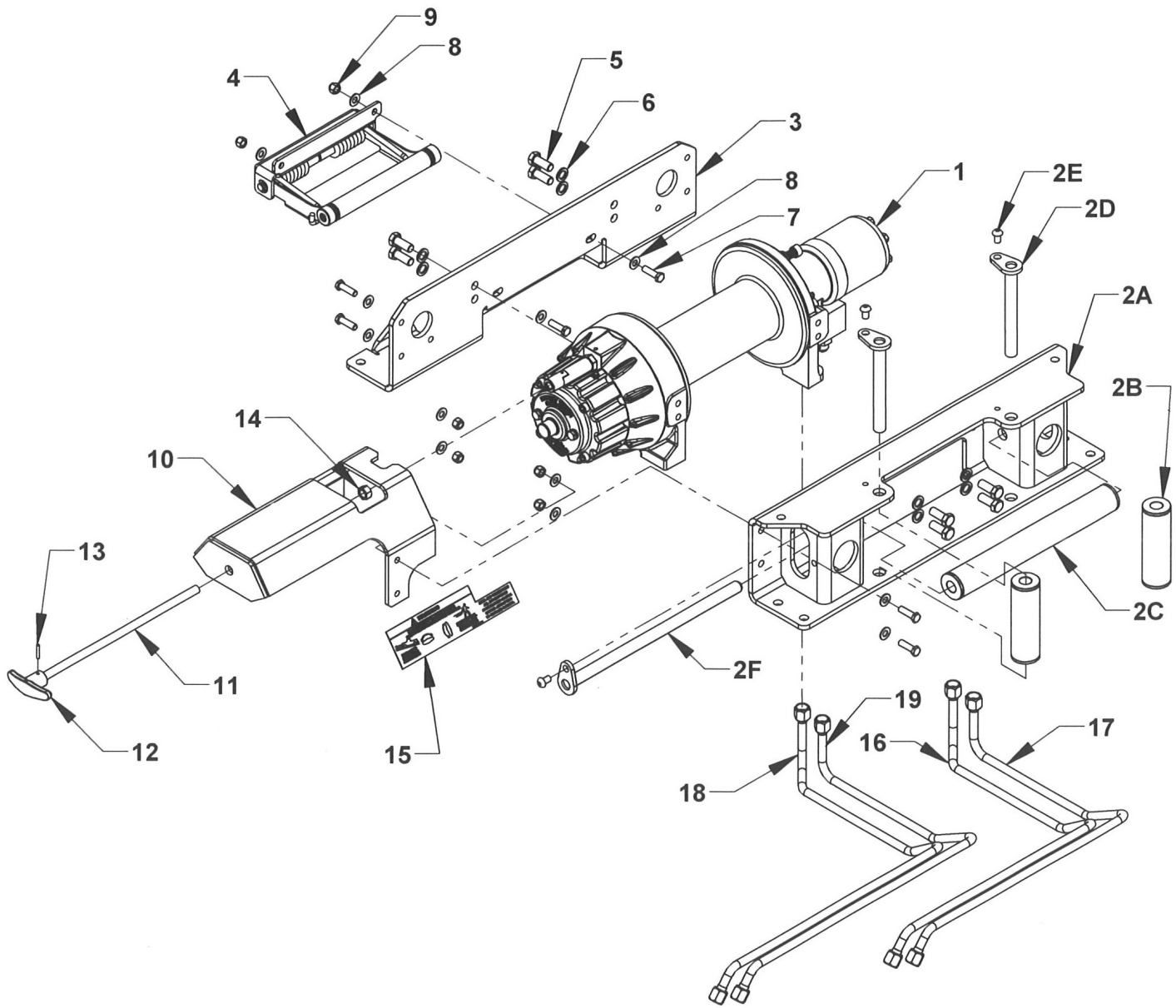

RAMSEY WINCH - 09023899-0810AM
8K OMEGA PLANETARY MANUAL SHIFT

REF. NO.	PART #	QTY	DESCRIPTION
1	03026291-0810AM	1	RAMSEY OMEGA 8K PLANETARY WINCH
2	0940422	1	RAMSEY OMEGA ROLLER GUIDE ASSEMBLY
2A	0811127	1	RAMSEY OMEGA ROLLER GUIDE
2B	0809640	2	ROLLER ASSEMBLY - 1.75 DIAMETER
2C	A901520	1	ROLLER ASSEMBLY - 1.75 DIAMETER
2D	0809641	2	ROLLER GUIDE KEEPER PIN
2E	0403161	3	BOLT 3/8-16 UNC x 5/8 BUTTON HEAD
2F	A901525	1	ROLLER GUIDE KEEPER PIN
3	0811128	1	RAMSEY OMEGA FRONT MTG CHANNEL
4	03025735	1	OMEGA CABLE TENSIONER GEN 2
5	04008448	8	BOLT HHCS M12 1.75X25mm 8.8
6	0400491	8	WASHER 1/2 LOCK
7	0400122	7	BOLT HHCS 3/8-16 UNC x 1-1/4
8	0400480	14	FLAT WASHER 3/8 SAE ZP
9	0400392	7	NYLON LOCK NUT 3/8-16 UNC
10	08011591	1	RAMSEY OMEGA T-HANDLE SUPPORT BRKT
11	0752684	1	RAMSEY OMEGA REMOTE CLUTCH ROD
12	0301532	1	MILLER T- HANDLE
13	0400560	1	ROLL PIN 1/8 x 7/8
14	0400407	1	NUT HEX 1/2
15	05002123	1	FREE SPOOL DECAL RAMSEY OMEGA
16	0752167-RS12	1	S10-16 CNV OMEGA FLUID TUBE-SHORT
17	0752168-RS12	1	S10-16 CNV OMEGA FLUID TUBE-LONG
18	0751974-RS12	1	S12-16 LCG OMEGA FLUID TUBE-SHORT
19	0751975-RS12	1	S12-16 LCG OMEGA FLUID TUBE-LONG

RAMSEY WINCH - 09023899-0810AM
8K OMEGA PLANETARY MANUAL SHIFT
DUAL HANDLE CLUTCH CONTROL ROD ASSEMBLY

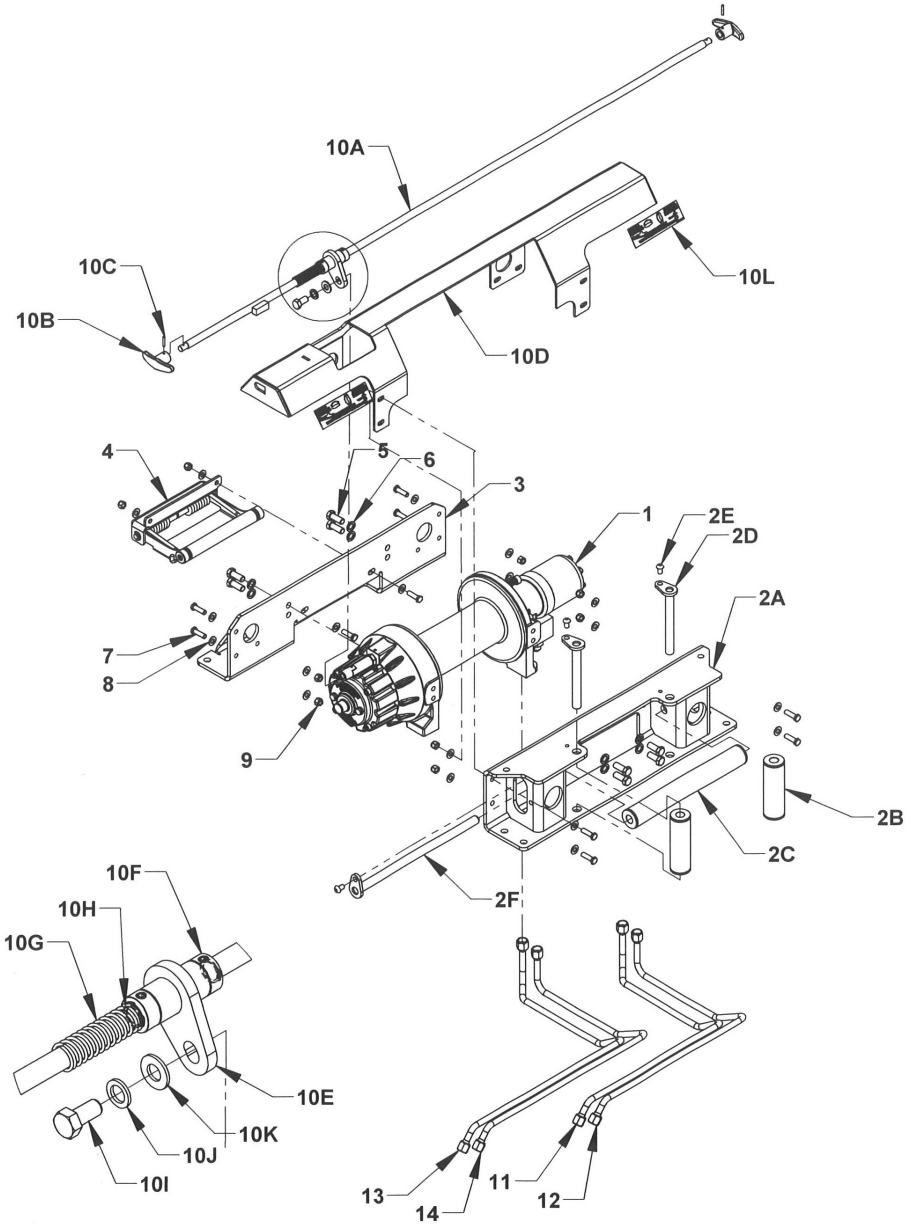

RAMSEY WINCH - 09023899-0810AM
8K OMEGA PLANETARY MANUAL SHIFT
DUAL HANDLE CLUTCH CONTROL ROD ASSEMBLY

REF. NO.	PART #	QTY	DESCRIPTION
1	0320127-0810AM	1	RAMSEY OMEGA 8K PLANETARY WINCH
2	0940422	1	RAMSEY ROLLER GUIDE ASSEMBLY
2A	0811127	1	RAMSEY ROLLER GUIDE
2B	0809640	2	ROLLER ASSEMBLY - 1.75 DIAMETER
2C	A901520	1	ROLLER ASSEMBLY - 1.75 DIAMETER
2D	0809641	2	ROLLER GUIDE KEEPER PIN
2E	0403161	3	BOLT 3/8-16 UNC x 5/8 BUTTON HEAD
2F	A901525	1	ROLLER GUIDE KEEPER PIN
3	0811128	1	RAMSEY FRONT MTG CHANNEL
4	03025735	1	OMEGA CABLE TENSIONER
5	04008448	8	BOLT HHCS M12 1.75X25mm 8.8
6	0400491	8	WASHER 1/2 LOCK
7	0400122	10	BOLT HHCS 3/8-16 UNC x 1-1/4
8	0400480	20	FLAT WASHER 3/8 SAE ZP
9	0400392	10	NYLON LOCK NUT 3/8-16 UNC
10	09022538	1	OMEGA DUAL HANDLE FREE SPOOL ASSEMBLY
10A	08009068	1	OMEGA DUAL HANDLE CONTROL ROD - 64"
10B	0301532	2	MILLER T- HANDLE
10C	0400560	2	ROLL PIN 5/32 x 1
10D	08019903	1	OMEGA T-HANDLE SUPPORT BRACKET
10E	08019921	1	DUAL HANDLE KEEPER BUSHING
10F	03012489	2	SET SCREW COLLAR 5/8 SHAFT, 5/16-18 x 1/4 SET SCREW
10G	03012928	1	SPRING COMPRESSION 3 x .875 OD x .091" WIRE DIA.
10H	86062E	2	SNAP RING 5/8 EXTERNAL
10I	0400176	1	BOLT HHS 1/2-13 UNC x 1
10J	0400491	2	WASHER 1/2 LOCK
10K	0403040	1	FLAT WASHER 1/2 SAE ZP
10L	05001603	2	FREE SPOOL DECAL RAMSEY DUAL HANDLE
11	0752167-RS12	1	S10-16 CNV OMEGA FLUID TUBE-SHORT
12	0752168-RS12	1	S10-16 CNV OMEGA FLUID TUBE-LONG
13	0751974-RS12	1	S12-16 LCG OMEGA FLUID TUBE-SHORT
14	0751975-RS12	1	S12-16 LCG OMEGA FLUID TUBE-LONG

RAMSEY WINCH - 09023899-0810AA
8K OMEGA PLANETARY AIR SHIFT

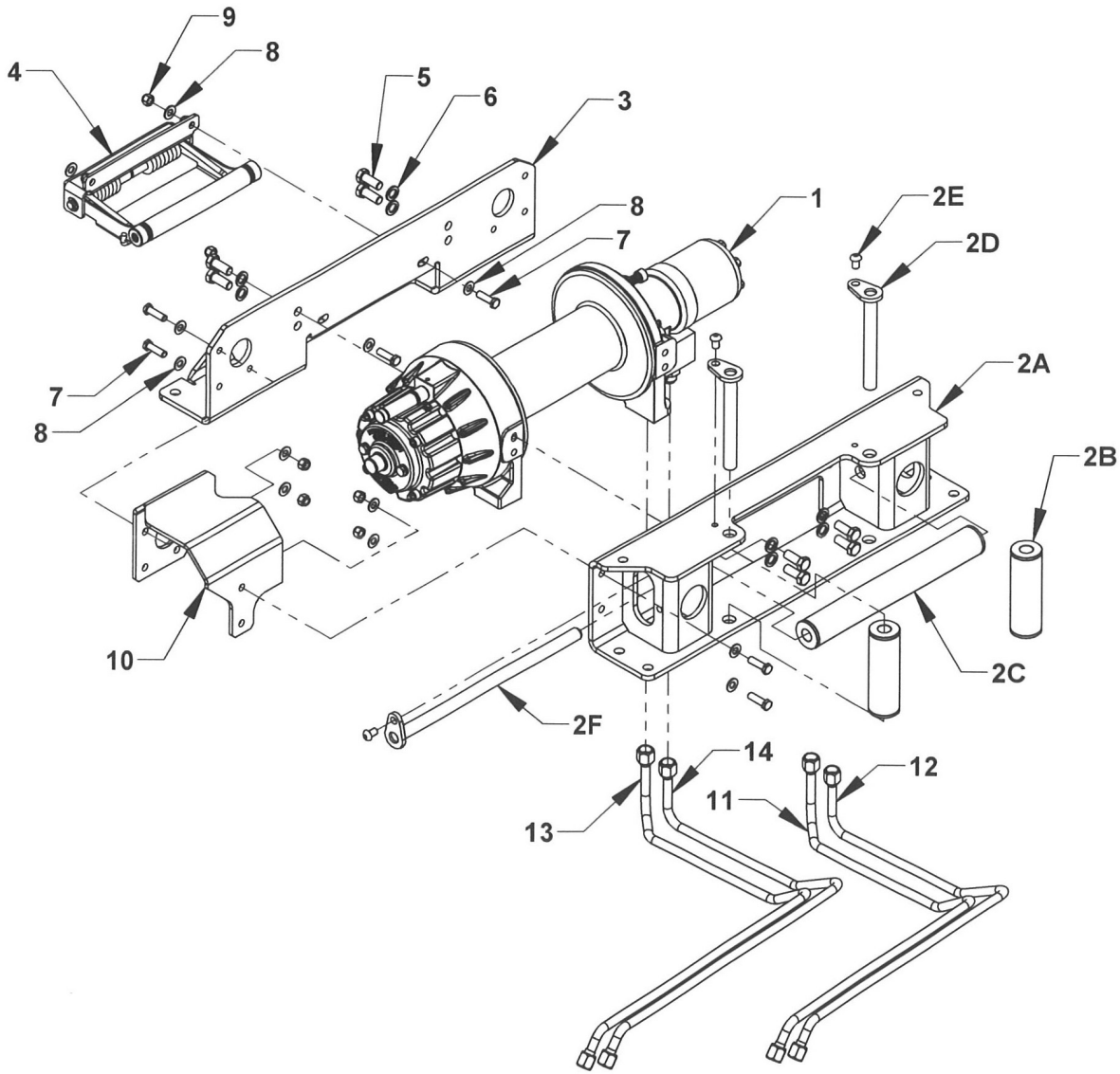

RAMSEY WINCH - 09023899-0810AA
8K OMEGA PLANETARY AIR SHIFT

REF NO.	PART #	QTY	DESCRIPTION
1	03026291-0810AA	1	RAMSEY OMEGA 8K PLANETARY WINCH
2	0940422	1	RAMSEY ROLLER GUIDE ASSEMBLY
2A	0811127	1	RAMSEY ROLLER GUIDE
2B	0809640	2	ROLLER ASSEMBLY - 1.75 DIAMETER
2C	A901520	1	ROLLER ASSEMBLY - 1.75 DIAMETER
2D	0809641	2	ROLLER GUIDE KEEPER PIN
2E	0403161	3	BOLT 3/8-16 UNC x 5/8 BUTTON HEAD
2F	A901525	1	ROLLER GUIDE KEEPER PIN
3	0811128	1	RAMSEY FRONT MTG CHANNEL
4	03025735	1	OMEGA CABLE TENSIONER GEN 2
5	04008448	8	BOLT HHCS M12 1.75X25mm 8.8
6	0400491	8	WASHER 1/2 LOCK
7	0400122	7	BOLT HHCS 3/8-16 UNC x 1-1/4
8	0400480	14	FLAT WASHER 3/8 SAE ZP
9	0400392	7	NYLON LOCK NUT 3/8-16 UNC
10	07005433	1	RAMSEY AIR CYLINDER GUARD
11	0752167-RS12	1	S10-16 CNV OMEGA FLUID TUBE-SHORT
12	0752168-RS12	1	S10-16 CNV OMEGA FLUID TUBE-LONG
13	0751974-RS12	1	S12-16 LCG OMEGA FLUID TUBE-SHORT
14	0751975-RS12	1	S12-16 LCG OMEGA FLUID TUBE-LONG

DP WINCH - 09013369-0810AM
8K DP PLANETARY MANUAL SHIFT

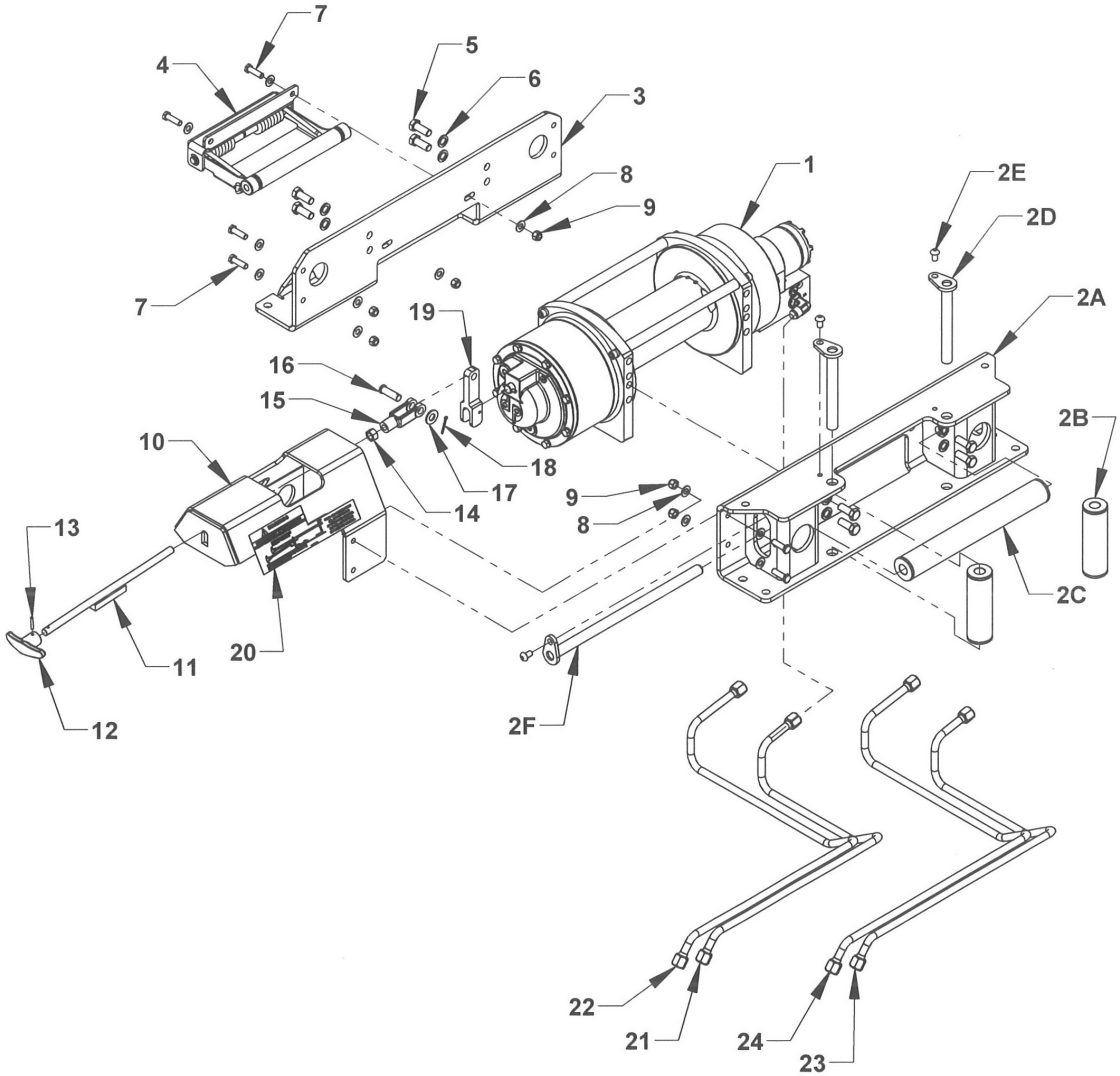

DP WINCH - 09013369-0810AM
8K DP PLANETARY MANUAL SHIFT

REF. NO.	PART #	QTY	DESCRIPTION
1	03015100-0810AM	1	DP 8K PLANETARY WINCH MANUAL SHIFT
	03015100-1210AM		DP 12K PLANETARY WINCH MANUAL SHIFT
	03015100-1510AM		DP 15K PLANETARY WINCH MANUAL SHIFT
2	09011914	1	DP 8K-15K ROLLER GUIDE FRAME ASSEMBLY
2A	08010128	1	DP 8K-15K ROLLER GUIDE FRAME
2B	0809640	2	ROLLER ASSEMBLY 1.75 DIAMETER x 5.625
2C	A901520	1	ROLLER ASSEMBLY 1.75 DIAMETER x 13.500
2D	0809641	2	ROLLER GUIDE KEEPER PIN 6.348
2E	0403161	3	BOLT 3/8-16 UNC x 5/8 BUTTON HEAD
2F	A901525	1	ROLLER GUIDE KEEPER PIN 14.535
3	08010129	1	DP FRONT MOUNTING FRAME
4	03015381	1	DP WINCH TENSIONER
5	0400177	8	BOLT HHCS 1/2-13 UNC x 1-1/4
6	0400491	8	LOCK WASHER 1/2
7	0400122	6	BOLT HHCS 3/8-16 UNC 1-1/4
8	0400480	12	FLAT WASHER 3/8
9	1400392	6	NYLON LOCK NUT 3/8-16 UNC
10	08011569	1	DP T-HANDLE SUPPORT BRACKET
11	08011568	1	DP T-HANDLE CLUTCH ROD
12	0301532	1	MILLER T-HANDLE
13	0400560	1	ROLL PIN .532 x 1
14	0400407	1	NUT HEX 1/2
15	0301588	1	CLUTCH CONTROL ADJUSTABLE YOKE
16	0400537	1	CLEVIS PIN 1/2 x 1-1/2
17	0403040	1	FLAT WASHER 1/2
18	0400540	1	COTTER PIN 3/32 x 1
19	03017221	1	DP WINCH LEVER
20	0500815	1	WINCH SAFETY DECAL
21	0752167-DP08	1	S10-16 CNV DP FLUID TUBE-SHORT
22	0752168-DP08	1	S10-16 CNV DP FLUID TUBE-LONG
23	0751974-DP08	1	S12-16 LCG DP FLUID TUBE-SHORT
24	0751975-DP08	1	S12-16 LCG DP FLUID TUBE-LONG

NOTE: Items 21 through 24 are not included in 09013369-0810AM.

DP WINCH - 09013369-0810AA
8K DP PLANETARY AIR SHIFT

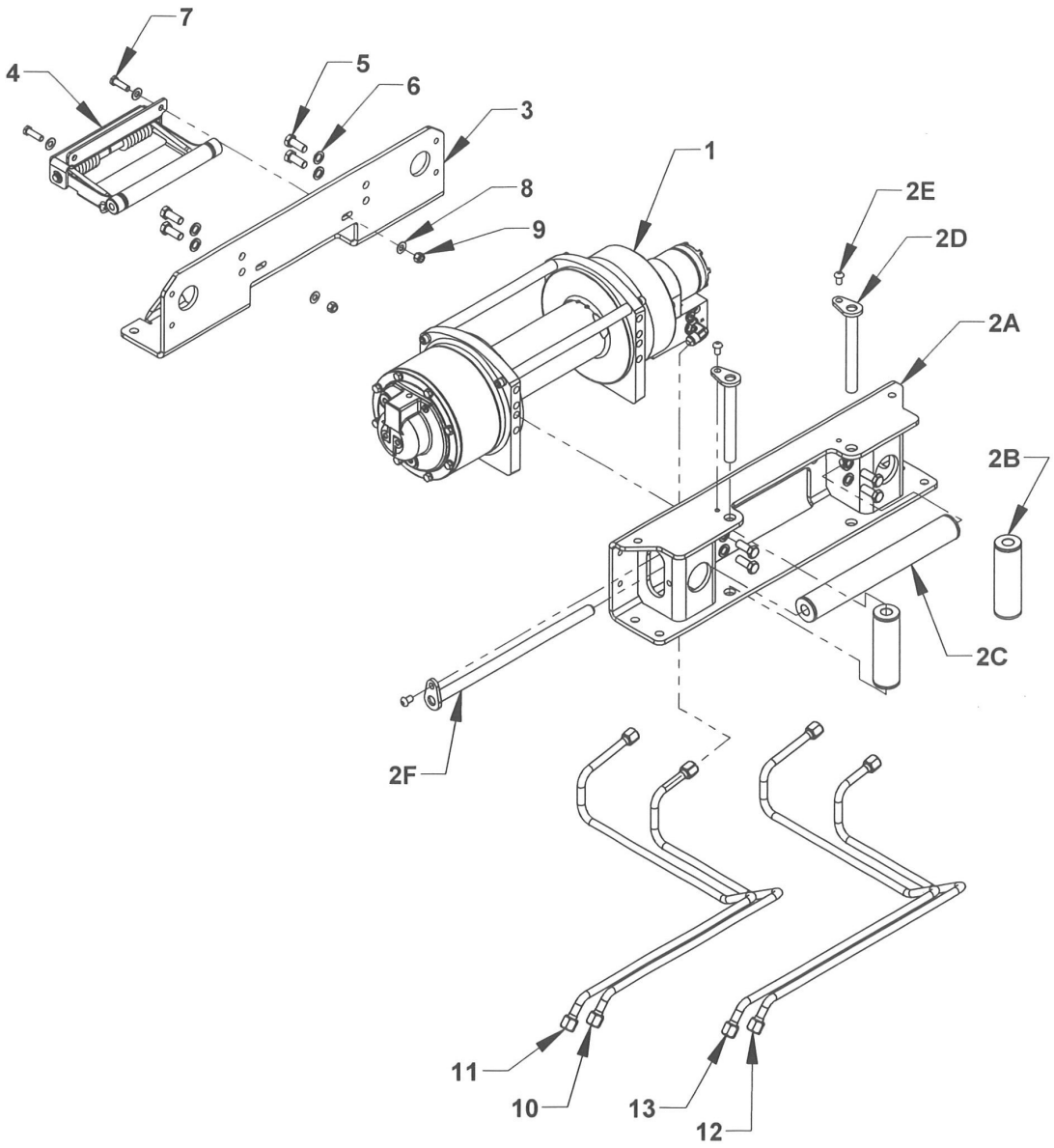

DP WINCH - 09013369-0810AA
8K DP PLANETARY AIR SHIFT

REF. NO.	PART #	QTY	DESCRIPTION
1	03015100-0810AA	1	DP 8K PLANETARY WINCH AIR SHIFT
	03015100-1210AA		DP 12K PLANETARY WINCH AIR SHIFT
	03015100-1510AA		DP 15K PLANETARY WINCH AIR SHIFT
2	09011914	1	DP 8K-15K ROLLER GUIDE FRAME ASSEMBLY
2A	08010128	1	DP 8K-15K ROLLER GUIDE FRAME
2B	0809640	2	ROLLER ASSEMBLY 1.75 DIAMETER x 5.625
2C	A901520	1	ROLLER ASSEMBLY 1.75 DIAMETER x 13.500
2D	0809641	2	ROLLER GUIDE KEEPER PIN 6.348
2E	0403161	3	BOLT 3/8-16 UNC x 5/8 BUTTON HEAD
2F	A901525	1	ROLLER GUIDE KEEPER PIN 14.535
3	08010129	1	DP FRONT MOUNTING FRAME
4	03015381	1	DP WINCH TENSIONER
5	0400177	8	BOLT HHCS 1/2-13 UNC x 1-1/4
6	0400491	8	LOCK WASHER 1/2
7	0400122	2	BOLT HHCS 3/8-16 UNC x 1-1/4
8	0400480	4	FLAT WASHER 3/8
9	1400392	2	NYLON LOCK NUT 3/8-16 UNC
10	0752167-DP08	1	S10-16 CNV DP FLUID TUBE-SHORT
11	0752168-DP08	1	S10-16 CNV DP FLUID TUBE-LONG
12	0751974-DP08	1	S12-16 LCG DP FLUID TUBE-SHORT
13	0751975-DP08	1	S12-16 LCG DP FLUID TUBE-LONG

NOTE: Items 10 through 13 are not included in 09013369-0810AM.

8K COMEUP WINCH - 0940283-0810AM

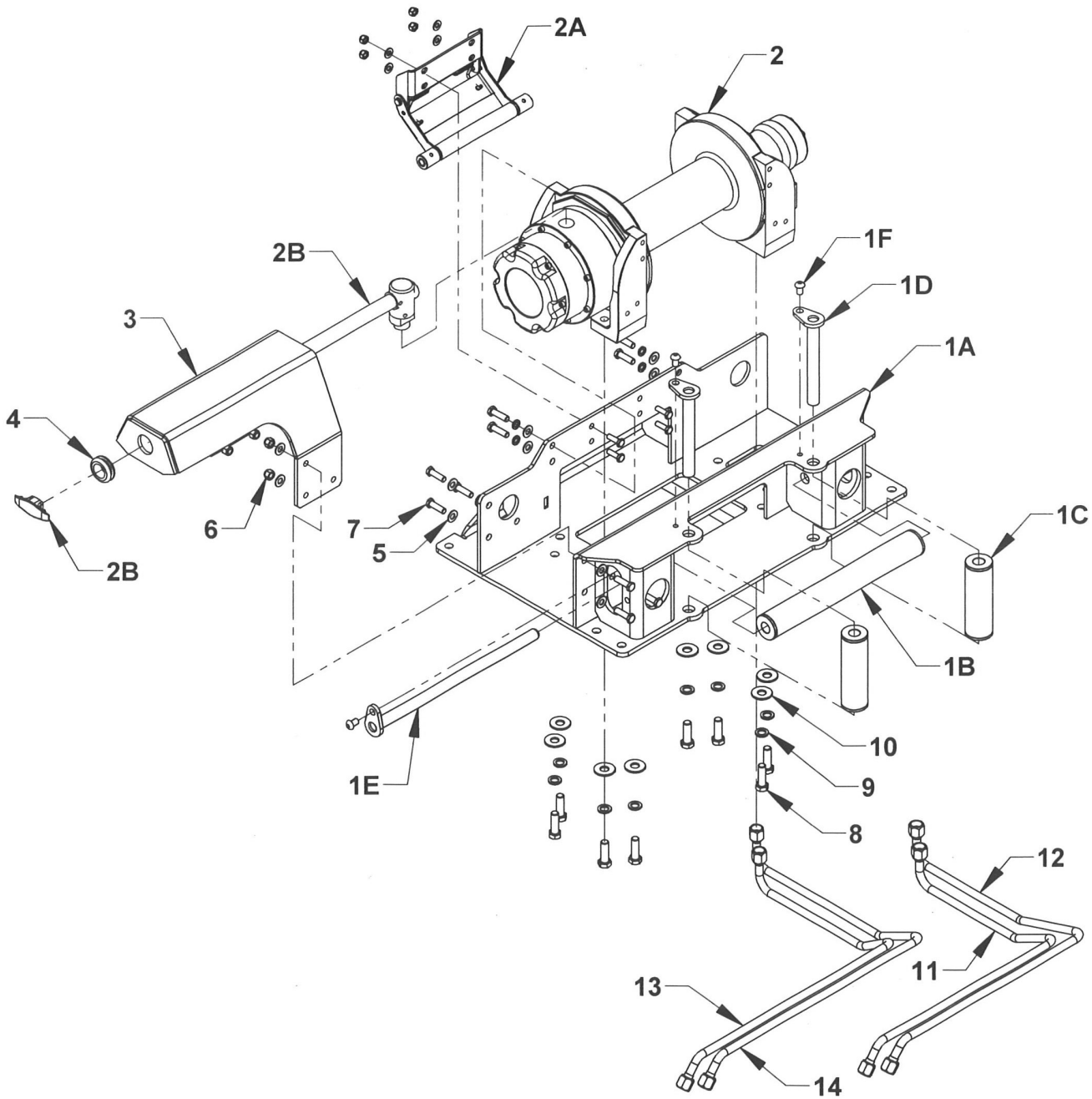

8K COMEUP WINCH - 0940283-0810AM

REF. NO.	PART #	QTY	DESCRIPTION
1	0940281	1	COMEUP 8K-12K WINCH FRAME ASSEMBLY
1A	0809713	1	COMEUP FRAME WELDMENT
1B	A901520	1	ROLLER ASSEMBLY - 1.750 DIAMETER x 13.500
1C	0809640	2	ROLLER ASSEMBLY - 1.750 DIAMETER x 5.625
1D	0809641	2	ROLLER GUIDE KEEPER PIN - 6.348
1E	A901525	1	ROLLER GUIDE KEEPER PIN - 14.535
1F	0403161	3	BOLT, BHCS 3/8-16 UNC x 5/8
2	0308986-0810AM	1	COMEUP 8K WINCH-ROTATION MANUAL SHIFT
	0308986-1210AM		COMEUP 12K WINCH-ROTATION MANUAL SHIFT
	0308986-1510AM		COMEUP 15K WINCH-ROTATION MANUAL SHIFT
2A	0320128	1	COMEUP WINCH TENSIONER
2B	0320129	1	COMEUP T-HANDLE CLUTCH - 16
3	08011590	1	COMEUP T-HANDLE SUPPORT BRACKET
4	98718	1	GROMMET 1.00 ID x 0.25 GROOVE
5	0400480	12	FLAT WASHER 3/8
6	0400392	6	NUT NYLOK 3/8-16 UNC
7	0400148	6	BOLT HHCS 3/8-16 UNC x 1-1/2 GR5
8	0400181	8	BOLT HHCS 1/2-13 UNC x 1-1/2 GR5
9	0400491	8	LOCK WASHER 1/2
10	0400492	8	WASHER 1/2
11	0752167-C	1	S10-16 CNV COMEUP FLUID TUBE-SHORT
12	0752168-C	1	S10-16 CNV COMEUP FLUID TUBE-LONG
13	0751974-C	1	S12-16 LCG COMEUP FLUID TUBE-SHORT
14	0751975-C	1	S12-16 LCG COMEUP FLUID TUBE-LONG

8K COMEUP WINCH - 0940283-0810AA

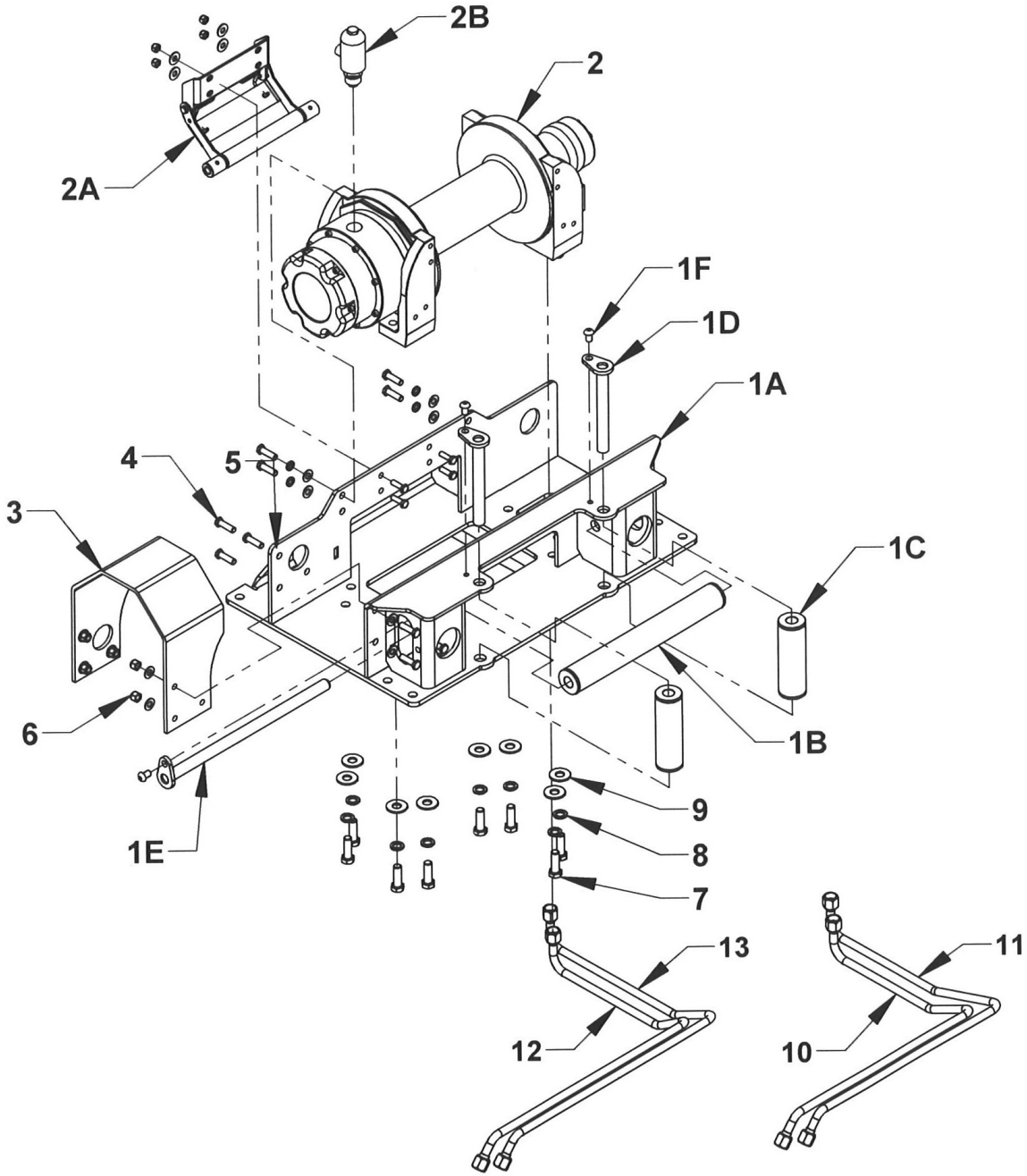

8K COMEUP WINCH - 0940283-0810AA AIR SHIFT

REF.	PART #	QTY	DESCRIPTION
1	0940281	1	COMEUP 8K-12K WINCH FRAME ASSEMBLY
1A	0809713	1	COMEUP FRAME WELDMENT
1B	A901520	1	ROLLER ASSEMBLY - 1.750 DIAMETER x 13.500
1C	0809640	2	ROLLER ASSEMBLY - 1.750 DIAMETER x 5.625
1D	0809641	2	ROLLER GUIDE KEEPER PIN - 6.348
1E	A901525	1	ROLLER GUIDE KEEPER PIN - 14.535
1F	0403161	3	BOLT, BHCS 3/8-16 UNC x 5/8
2	0308986-0810AA	1	COMEUP 8K WINCH-ROTATION AIR SHIFT
	0308986-1210AA		COMEUP 12K WINCH-ROTATION AIR SHIFT
	0308986-1510AA		COMEUP 15K WINCH-ROTATION AIR SHIFT
2A	0320128	1	COMEUP WINCH TENSIONER
2B	0308955	1	COMEUP FREESPOOL AIR CYLINDER
3	0752482	1	COMEUP AIR CYLINDER GUARD
4	0400148	6	BOLT HHCS 3/8-16 UNC x 1-1/2 GR5
5	0400480	12	FLAT WASHER 3/8
6	040392	6	NUT NYLOK 3/8-16 UNC
7	0400181	8	BOLT HHCS 1/2-13 UNC x 1-1/2 GR5
8	0400491	8	LOCK WASHER 1/2
9	0400492	8	WASHER 1/2
10	0752167-C	1	S10-16 CNV COMEUP FLUID TUBE - SHORT
11	0752168-C	1	S10-16 CNV COMEUP FLUID TUBE - LONG
12	0751974-C	1	S12-16 LCG COMEUP FLUID TUBE - SHORT
13	0751975-C	1	S12-16 LCG COMEUP FLUID TUBE - LONG

WARN WINCH - MANUAL FREE SPOOL

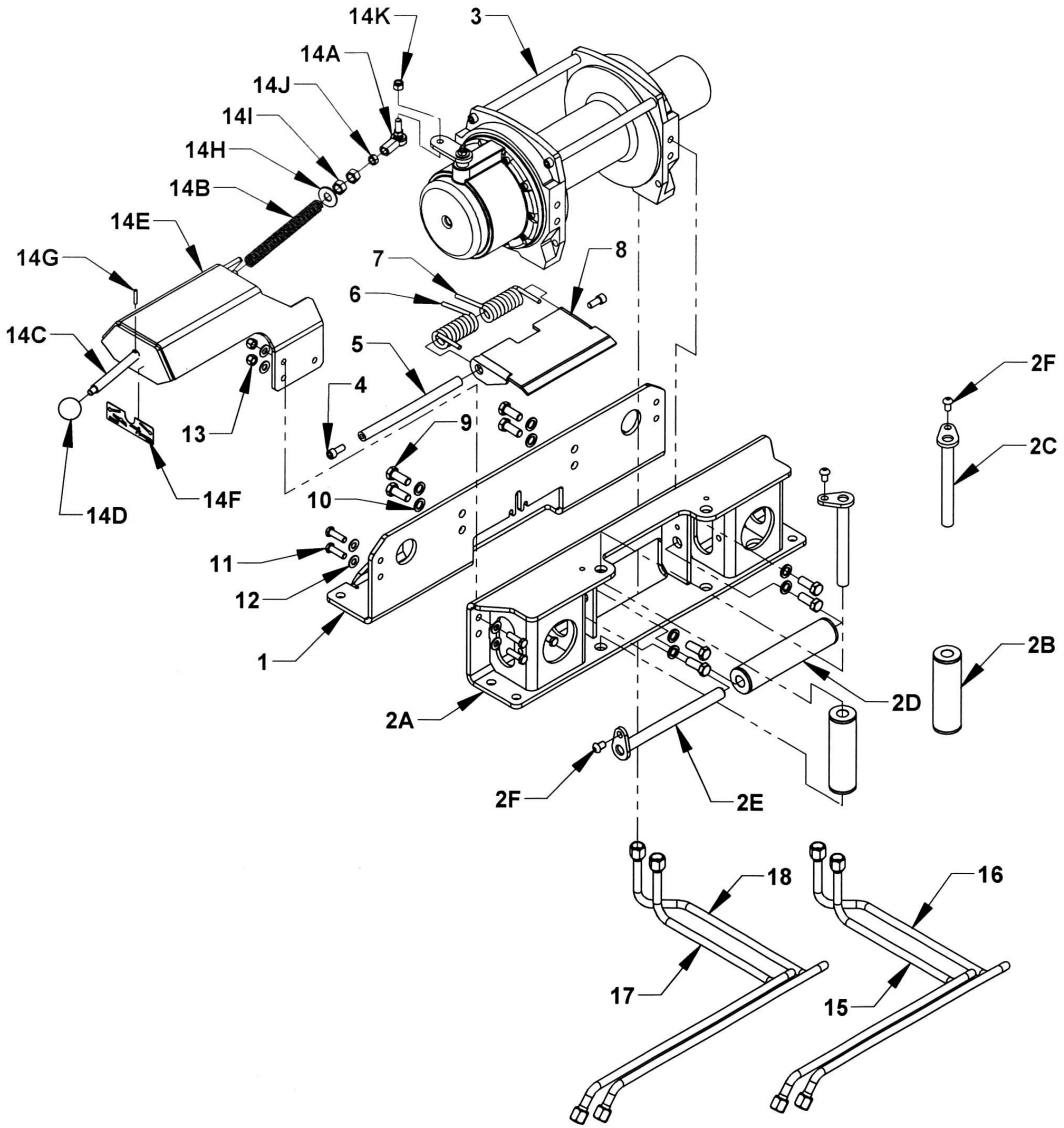

WARN WINCH - MANUAL FREE SPOOL

REF. NO.	PART #	QTY	DESCRIPTION
1	0809644	1	MTG FRAME WELDMENT - FRONT
2	0940240	1	WARN MTG FRAME REAR ASSEMBLY
2A	0809639	1	MTG FRAME WLDMNT - ROLLER GUIDE REAR
2B	0809640	2	ROLLER GUIDE BUSHING 1.75 x 5.625
2C	0809641	2	ROLLER GUIDE KEEPER PIN
2D	A9R281	1	ROLLER GUIDE BUSHING 1.75 x 7.875
2E	A902095	1	ROLLER GUIDE KEEPER PIN
2F	0403161	3	BOLT, BHCS 3/8-16 UNC x 5/8
3	0308936-0908AM	1	WINCH 9K, 8 IN. DRUM MANUAL SHIFT
	0308936-1208AM		WINCH 12K, 8 IN. DRUM MANUAL SHIFT
	0308936-1508AM		WINCH 15K, 8 IN. DRUM MANUAL SHIFT
4	0403109	2	BOLT, SHCS 3/8-16 UNC x 7/8
5	0751337	1	TENSION PLATE PIVOT ROD
6	0308935R	1	TENSION SPRING
7	0308935L	1	TENSION SPRING
8	0751268	1	TENSION PLATE
9	0400177	8	BOLT HHCS 1/2-13 UNC x 1-1/4
10	0400491	8	LOCK WASHER 1/2
11	0400122	5	BOLT HHCS 3/8-16 UNC x 1-1/4
12	0400480	10	FLAT WASHER 3/8
13	0400392	5	NYLON LOCK NUT 3/8-16 UNC
14	09013709	1	CLUTCH CONTROL ASSEMBLY WARN WINCH
14A	718732	1	ROD END BEARING
14B	71875	1	WINCH SPRING
14C	71873	1	WINCH CLUTCH ROD
14D	718731	1	WINCH CLUTCH ROD KNOB
14E	08011592	1	WINCH-MANUAL FREE SPOOL BRACKET
14F	05002124	1	FREE SPOOL DECAL WARN WINCH
14G	0405559	1	SPLIT PIN 3/16 x 1
14H	0400492	1	FLAT WASHER 1/2
14I	0400407	2	HEX NUT 1/2-13 UNC
14J	0402122	1	HEX NUT 3/8-16 UNC
14K	0400392	1	NYLON LOCK NUT 3/8-16 UNC
15	0752167-W	1	S10-16 CNV WARN FLUID TUBE-SHORT
16	0752168-W	1	S10-16 CNV WARN FLUID TUBE-LONG
17	0751974-W	1	S12-16 LCG WARN FLUID TUBE-SHORT
18	0751975-W	1	S12-16 LCG WARN FLUID TUBE-LONG

WARN WINCH - AIR FREE SPOOL

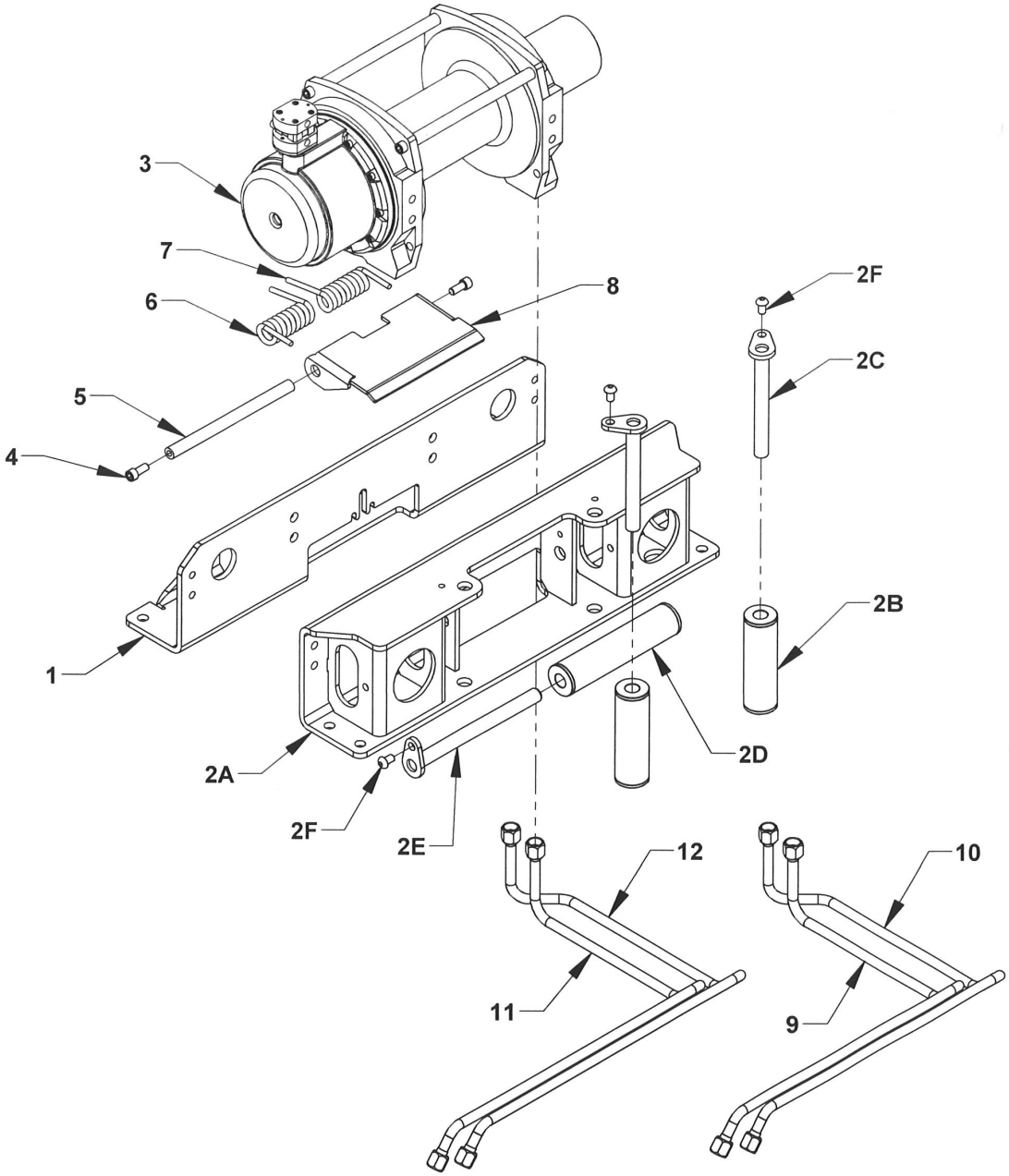

WARN WINCH - AIR FREE SPOOL

REF. NO.	PART#	QTY	DESCRIPTION
1	0809644	1	MTG FRAME WELDMENT - FRONT
2	0940240	1	WARN MTG FRAME REAR ASSEMBLY
2A	0809639	1	MTG FRAME WLDMNT - ROLLER GUIDE REAR
2B	0809640	2	ROLLER GUIDE BUSHING 1.75 x 5.625
2C	0809641	2	ROLLER GUIDE KEEPER PIN
2D	A9R281	1	ROLLER GUIDE BUSHING 1.75 x 7.875
2E	A902095	1	ROLLER GUIDE KEEPER PIN
2F	0403161	3	BOLT, BHCS 3/8-16 UNC x 5/8
3	0308936-0908AA	1	WINCH 9K, 8 IN. DRUM AIR SHIFT
	0308936-1208AA	1	WINCH 12K, 8 IN. DRUM AIR SHIFT
	0308936-1508AA	1	WINCH 15K, 8 IN. DRUM AIR SHIFT
4	0403109	2	BOLT, SHCS 3/8-16 UNC x 7/8
5	0751337	1	TENSION PLATE PIVOT ROD
6	0308935R	1	TENSION SPRING
7	0308935L	1	TENSION SPRING
8	0751268	1	TENSION PLATES
9	0752167-W	1	S10-16 CNV WARN FLUID TUBE-SHORT
10	0752168-W	1	S10-16 CNV WARN FLUID TUBE-LONG
11	0751974-W	1	S12-16 LCG WARN FLUID TUBE-SHORT
12	0751975-W	1	S12-16 LCG WARN FLUID TUBE-LONG

OPTIONAL DASHBOARD PANEL

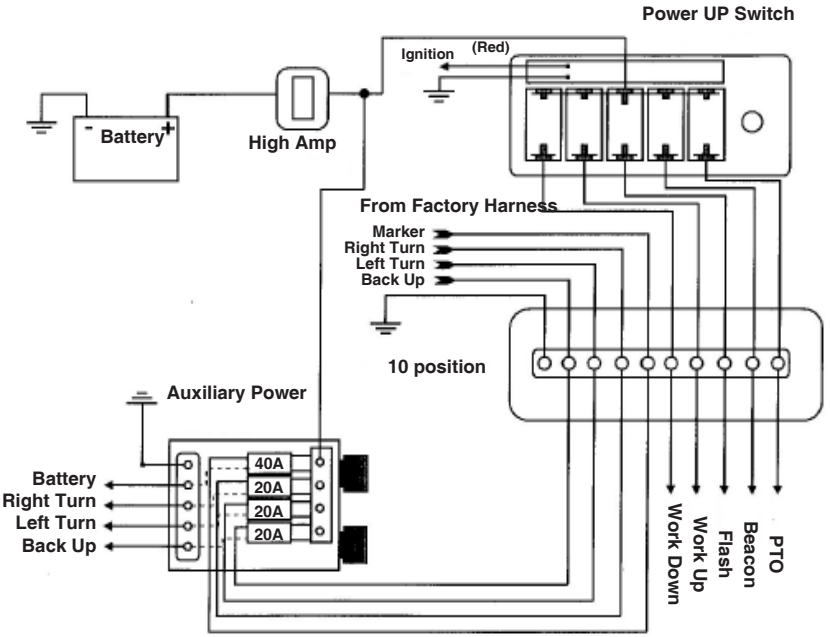

LIGHT KIT

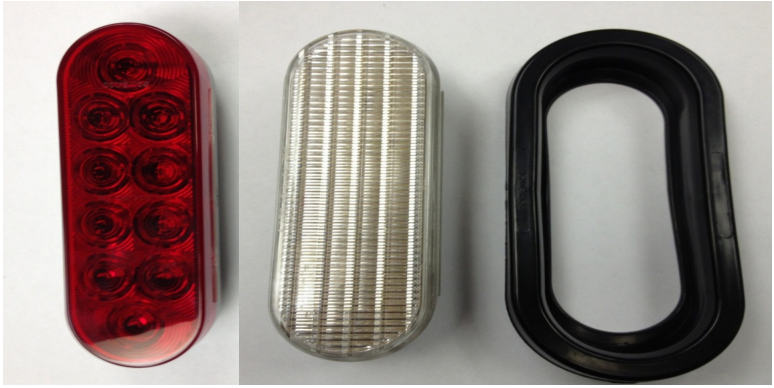

REF. NO.	PART NUMBER	DESCRIPTION
1	0311498	LIGHT 6" OVAL RED LED - STOP/TURN
2	0311500	LIGHT 6" OVAL REVERSE LED
3	3011503	LIGHT 6" GROMMET

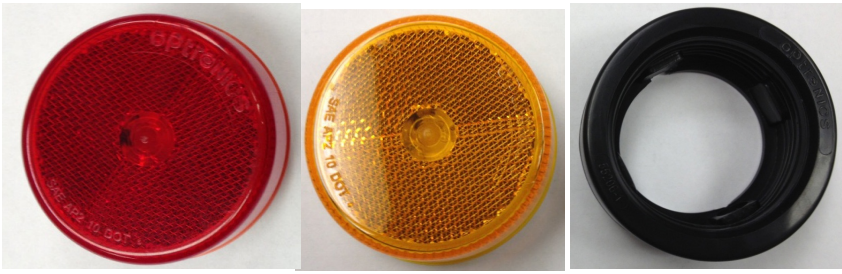

REF. NO.	PART NUMBER	DESCRIPTION
1	0311512	LIGHT 2.5" RED REFLEX LED (MCL59RB)
2	0311513	LIGHT 2.5" AMBER REFLEX LED (MCL59AB)
3	0311516	LIGHT 2.5" GROMMET

LIGHT KIT

REF. NO.	PART NUMBER	DESCRIPTION
1	0311514	LIGHT 2.5" ROUND CLEAR/RED LED MARKER LIGHT
2	0311515	LIGHT 2.5" ROUND CLEAR/AMBER LED MARKER LIGHT
3	3011516	LIGHT 2.5" GROMMET

REF. NO.	PART NUMBER	DESCRIPTION
1	0320162	6 IN. CONTROL STATION LED LIGHT

LIGHT KIT & PRESSURE GAUGE

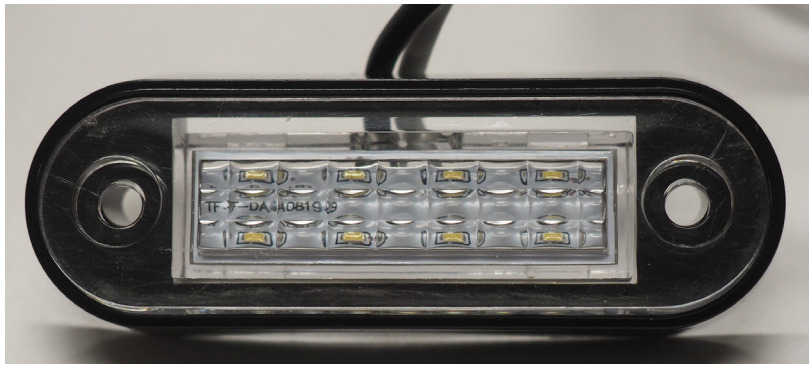

REF. NO.	PART NUMBER	DESCRIPTION
1	0320161	3 IN. CONTROL STATION LED LIGHT

REF. NO.	PART NUMBER	DESCRIPTION
1	0320157	2 IN. HYDRAULIC PRESSURE GAUGE

LIGHT KIT

REF. NO.	PART NUMBER	DESCRIPTION
1	0311519	RED 3/4 LED ICC LIGHT

REF. NO.	PART NUMBER	DESCRIPTION
1	0311520	RED 3/4 LED LIGHT

LIGHT KIT

REF. NO.	PART NUMBER	DESCRIPTION
1	0311521	AMBER 3/4 ROUND LED LIGHT

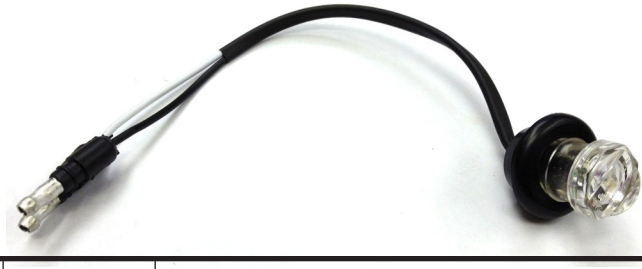

REF. NO.	PART NUMBER	DESCRIPTION
1	0311522	CLEAR/RED 3/4 ROUND LED LIGHT

REF. NO.	PART NUMBER	DESCRIPTION
1	0311523	CLEAR/AMBER 3/4 ROUND LED LIGHT

LIGHT KIT

REF. NO.	PART NUMBER	DESCRIPTION
1	0308359	MARKER LIGHT RED REFLEX LED

REF. NO.	PART NUMBER	DESCRIPTION
1	0308360	MARKER LIGHT AMBER REFLEX LED

LIGHT KIT

REF. NO.	PART NUMBER	DESCRIPTION
1	0308969R	MARKER LIGHT RED REFLEX LED

REF. NO.	PART NUMBER	DESCRIPTION
1	0308969A	MARKER LIGHT AMBER REFLEX LED

LIGHT KIT

REF. NO.	PART NUMBER	DESCRIPTION
1	0312578	MILLENNIUM MARKER LIGHT CLEAR/AMBER

REF. NO.	PART NUMBER	DESCRIPTION
1	0312579	MILLENNIUM MARKER LIGHT CLEAR/RED

LIGHT KIT

REF. NO.	PART NUMBER	DESCRIPTION
1	0308491	REFLECTOR - AMBER

REF. NO.	PART NUMBER	DESCRIPTION
1	0308490	REFLECTOR - RED

LIGHT KIT

REF. NO.	PART NUMBER	DESCRIPTION
1	0311510	RECTANGULAR REFLEX BACK UP
1	0311511	RECTANGULAR REFLEX BACK UP GROMMET

MANUAL SLIDEWINDER - 315200 (SHORT TRACK)

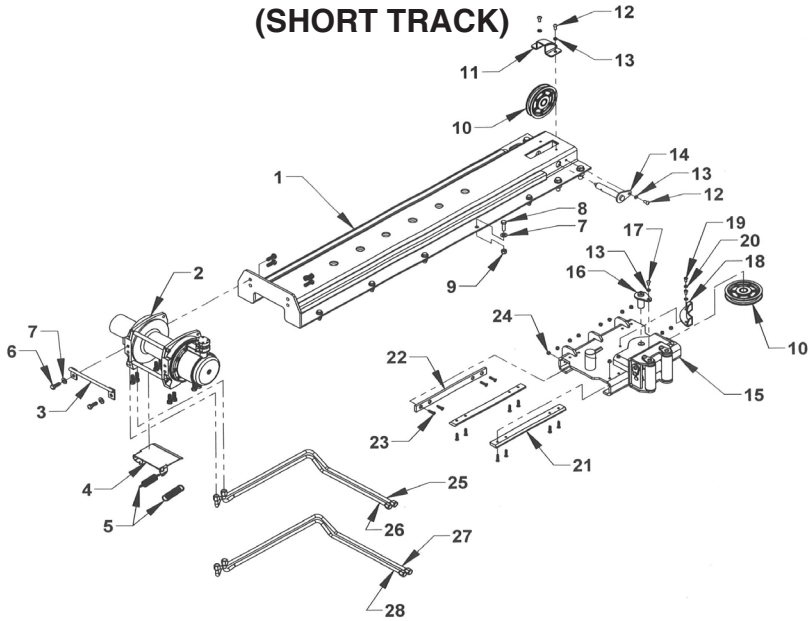

REF	PART #	QTY	DESCRIPTION
1	315210	1	SLIDE TRACK - SHORT
2	711096	1	SERIES 9 WINCH - 6.5 INCH DRUM
	711126	1	SERIES 12 WINCH - 6.5 INCH DRUM
3	7189065	1	AIR LINE TRANSFER BRACKET
4	A90065	1	CABLE TENSIONER PLATE
5	A9018S	2	TENSION SPRING 40 LB/INCH
6	0400733	14	BOLT M12-1.75 MM x 35 HHC 8.8
7	0403040	20	FLAT WASHER 1/2 SAE
8	0400181	14	BOLT 1/2-13 UNC x 1-1/2 HHC GR5
9	0403100	14	NUT NYLOCK 1/2-13 UNC
10	69125	2	6 x 1 PULLEY
11	315225	1	CABLE GUIDE
12	0400878	4	BOLT 3/8-16 UNJC x 3/4 BHC
13	0400482	5	LOCK WASHER 3/8
14	315230	1	PULLEY PIN
15	315310	1	SLIDE CARRIAGE
16	315330	1	PULLEY PIN
17	0403161	1	BOLT 3/8 -16 UNC x 5/8 BHC
18	315325	1	CABLE GUIDE
19	0403158	2	BOLT 5/16 -18 UNC x 5/8 BHC
20	0400464	2	LOCK WASHER 5/16
21	315320	1	SLIDE PAD
22	315323	2	FRONT SLIDE PAD
23	04000321	12	SCREW 5/16-18 UNC x 1-1/4 FH TORX
24	0400382	12	NUT NYLOCK 5/16-18 UNC
25	383SW0944	1	ST SLIDEWINDER FLUID TUBE-LONG
26	383SW0940	1	ST SLIDEWINDER FLUID TUBE-SHORT
27	07005356	1	G2 SHORT TRACK SLIDEWINDER FLUID TUBE-LONG
28	07005355	1	G2 SHORT TRACK SLIDEWINDER FLUID TUBE-SHORT

MANUAL SLIDEWINDER - 315204 (LONG TRACK)

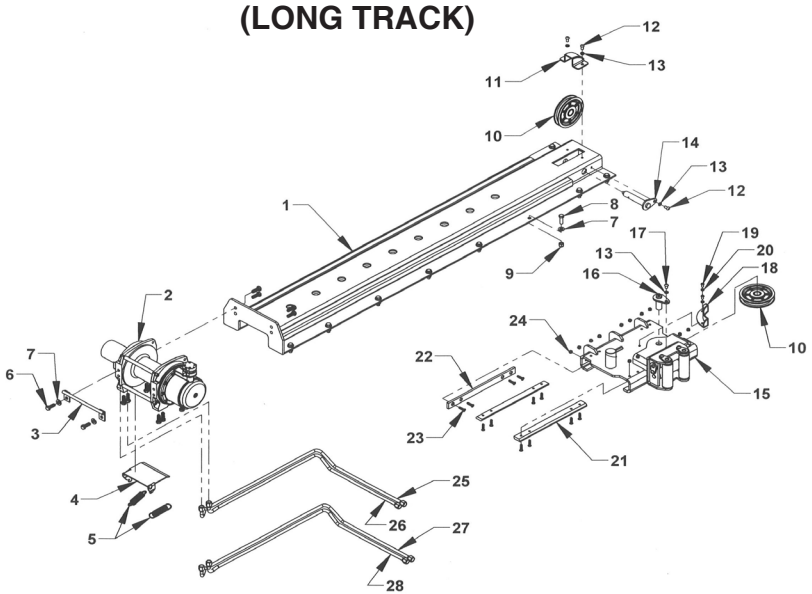

REF	PART #	QTY	DESCRIPTION
1	315214	1	SLIDE TRACK - LONG
2	711096	1	SERIES 9 WINCH - 6.5 INCH DRUM
	711126	1	SERIES 12 WINCH - 6.5 INCH DRUM
3	7189065	1	AIR LINE TRANSFER BRACKET
4	A90065	1	CABLE TENSIONER PLATE
5	A9018S	2	TENSION SPRING 40 LB/INCH
6	0400733	14	BOLT M12-1.75 MM x 35 HHC 8.8
7	0403040	22	FLAT WASHER 1/2 SAE
8	0400181	16	BOLT 1/2-13 UNC x 1-1/2 HHC GR5
9	0403100	16	NUT NYLOCK 1/2-13 UNC
10	69125	2	6 x 1 PULLEY
11	315225	1	CABLE GUIDE
12	0400878	4	BOLT 3/8-16 UNC x 3/4 BHC
13	0400482	5	LOCK WASHER 3/8
14	315230	1	PULLEY PIN
15	315310	1	SLIDE CARRIAGE
16	315330	1	PULLEY PIN
17	0403161	1	BOLT 3/8 -16 UNC x 5/8 BHC
18	315325	1	CABLE GUIDE
19	0403158	2	BOLT 5/16 -18 UNC x 5/8 BHC
20	0400464	2	LOCK WASHER 5/16
21	315320	1	SLIDE PAD
22	315323	2	FRONT SLIDE PAD
23	04000321	12	SCREW 5/16-18 UNC x 1-1/4 FH TORX
24	0400382	12	NUT NYLOCK 5/16-18 UNC
25	0751932	1	G2 LONG TRACK LCG FLUID TUBE-LONG
26	0751933	1	G2 LONG TRACK LCG FLUID TUBE--SHORT
27	0752598	1	G2 LONG TRACK CNV FLUID TUBE-LONG
28	0752599	1	G2 LONG TRACK CNV FLUID TUBE-SHORT

Section V - PARTS

33" ALUMINUM TOOLBOX - 377000

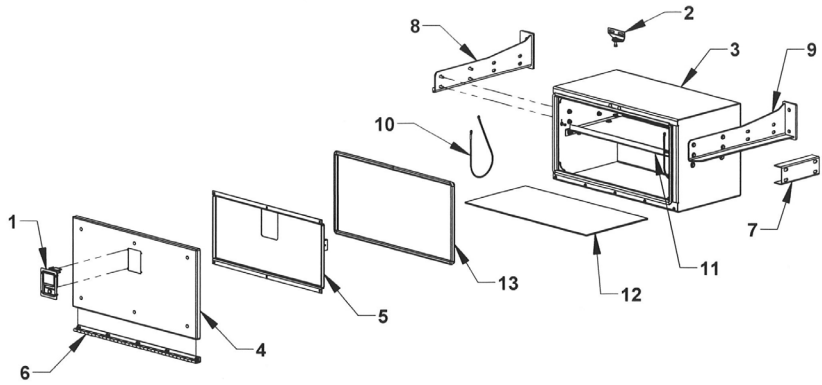

NOTE: 377000 DOES NOT INCLUDE MOUNTING BRACKETS

REF	PART #	QTY	DESCRIPTION
1	54658	1	ROTARY PADDLE LATCH
	54657	1	GASKET FOR PADDLE LATCH
	81111	4	#8-32 x 1/2 STAINLESS ONE WAY SCREW
	83111	4	#8-32 STAINLESS KEPT NUT
2	376182	1	STRIKER PIN MOUNTING PLATE
	54659	1	STRIKER PIN
	0403072	2	STAINLESS CARRIAGE BOLT 5/16-18 x 3/4
	0400465	4	FLAT WASHER 5/16
	0400464	2	LOCK WASHER 5/16
	0403151	2	NUT 5/16-18
	0400382	1	NYLON LOCK NUT 5/16-18
3	377100W	1	BOX WELDMENT
4	37741	1	DOOR WELDMENT
	37740	1	DOOR ASSEMBLY
	81100	6	STAINLESS CARRIAGE BOLT 1/4-20 x 3/4
	0400367	6	NYLON LOCK NUT 1/4-20
5	37744	1	DOOR REINFORCEMENT
6	37735	1	HINGE
	811014	2	SS SOCKET BUTTON HEAD BOLT 1/4-20 x 7/8
	811012	3	SS SOCKET BUTTON HEAD BOLT 1/4-20 x 3/4
	811010	5	SS SOCKET BUTTON HEAD BOLT 1/4-20 x 5/8
	0400367	10	NYLON LOCK NUT 1/4-20
7	37760	1	TANDEM BOX SPACER CHANNEL (OPTIONAL)
8	37855R	1	TANK AND TOOLBOX MTG BRACKET-RH
9	37855L	1	TANK AND TOOLBOX MTG BRACKET-LH
10	5A221	2	LANYARD-21 INCH
11	37770	1	SHELF
12	030002300	1	TOOLBOX MAT 33"
13	18151S	8 FT	TRIM SEAL - 3/8 WITH 5/8 BULB - 96 IN.

49" ALUMINUM TOOLBOX - 378000

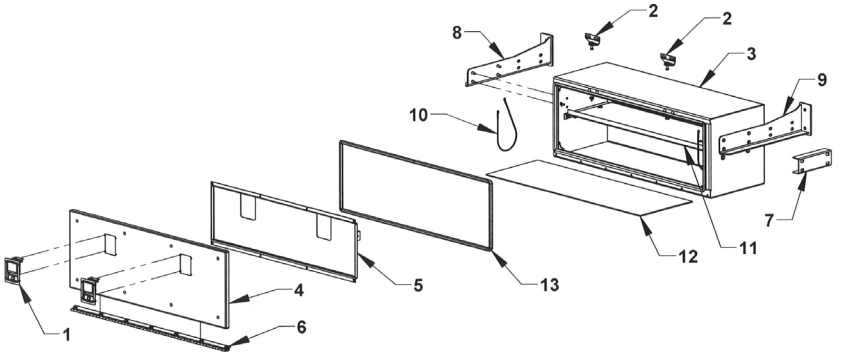

NOTE: 378000 DOES NOT INCLUDE MOUNTING BRACKETS

REF	PART #	QTY	DESCRIPTION
1	54658	2	ROTARY PADDLE LATCH
	54657	2	GASKET FOR PADDLE LATCH
	81111	8	#8-32 x 1/2 STAINLESS ONE WAY SCREW
	83111	8	#8-32 STAINLESS KEPT NUT
2	376182	2	STRIKER PIN MOUNTING PLATE
	54659	2	STRIKER PIN
	0403072	4	STAINLESS CARRIAGE BOLT 5/16-18 x 3/4
	0400465	8	FLAT WASHER 5/16
	0400464	4	LOCK WASHER 5/16
	0403151	4	NUT 5/16-18
	0400382	2	NYLON LOCK NUT 5/16-18
3	378100W	1	BOX WELDMENT
4	37841	1	DOOR WELDMENT
	37840	1	DOOR ASSEMBLY
	81100	8	STAINLESS CARRIAGE BOLT 1/4-20 x 3/4
	0400367	8	NYLON LOCK NUT 1/4-20
5	37844	1	DOOR REINFORCEMENT
6	37835	1	HINGE
	811014	2	SS SOCKET BUTTON HEAD BOLT 1/4-20 x 7/8
	811012	5	SS SOCKET BUTTON HEAD BOLT 1/4-20 x 3/4
	811010	7	SS SOCKET BUTTON HEAD BOLT 1/4-20 x 5/8
	0400367	14	NYLON LOCK NUT 1/4-20
7	37760	1	TANDEM BOX SPACER CHANNEL (OPTIONAL)
8	37855R	1	TANK AND TOOLBOX MTG BRACKET-RH
9	37855L	1	TANK AND TOOLBOX MTG BRACKET-LH
10	5A221	2	LANYARD-21 INCH
11	37670	1	SHELF
12	030002301	1	TOOLBOX MAT 49"
13	18151S	11 FT.	TRIM SEAL - 3/8 WITH 5/8 BULB - 132 IN.

65" ALUMINUM TOOLBOX - 379000

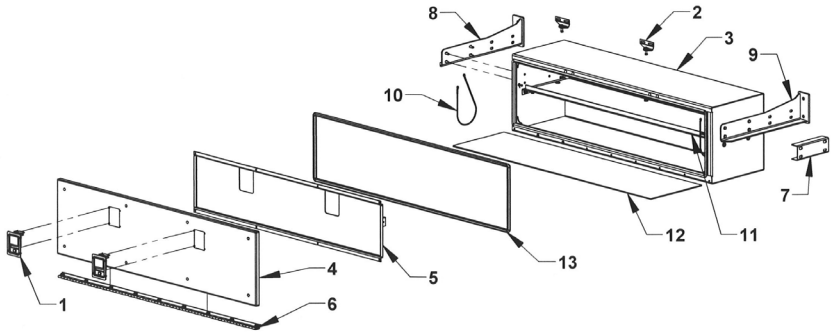

NOTE: 379000 DOES NOT INCLUDE MOUNTING BRACKETS

REF	PART #	QTY	DESCRIPTION
1	54658	2	ROTARY PADDLE LATCH
	54657	2	GASKET FOR PADDLE LATCH
	81111	8	#8-32 x 1/2 STAINLESS ONE WAY SCREW
	83111	8	#8-32 STAINLESS KEPT NUT
2	376182	2	STRIKER PIN MOUNTING PLATE
	54659	2	STRIKER PIN
	0403072	4	STAINLESS CARRIAGE BOLT 5/16-18 x 3/4
	0400465	8	FLAT WASHER 5/16
	0400464	4	LOCK WASHER 5/16
	0403151	4	NUT 5/16-18
	0400382	2	NYLON LOCK NUT 5/16-18
3	379100W	1	BOX WELDMENT
4	37941	1	DOOR WELDMENT
	37940	1	DOOR ASSEMBLY
	81100	8	STAINLESS CARRIAGE BOLT 1/4-20 x 3/4
	0400367	8	NYLON LOCK NUT 1/4-20
5	37944	1	DOOR REINFORCEMENT
6	37935	1	HINGE
	811014	2	SS SOCKET BUTTON HEAD BOLT 1/4-20 x 7/8
	811012	7	SS SOCKET BUTTON HEAD BOLT 1/4-20 x 3/4
	811010	7	SS SOCKET BUTTON HEAD BOLT 1/4-20 x 5/8
	0400367	18	NYLON LOCK NUT 1/4-20
7	37760	1	TANDEM BOX SPACER CHANNEL (OPTIONAL)
8	37855R	1	TANK AND TOOLBOX MTG BRACKET-RH
9	37855L	1	TANK AND TOOLBOX MTG BRACKET-LH
10	5A221	2	LANYARD-21 INCH
11	37970	1	SHELF
12	030002302	1	TOOLBOX MAT 65"
13	18151S	13.5 FT	TRIM SEAL - 3/8 WITH 5/8 BULB - 162 IN.

36" STEEL TOOLBOX LCG - 174016021

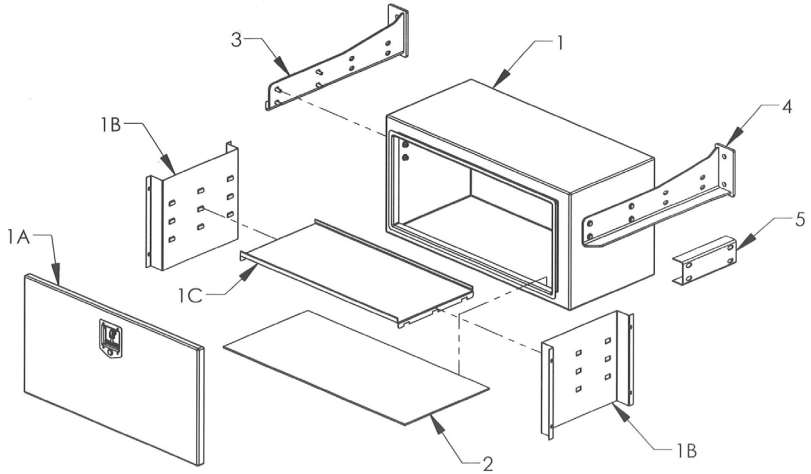

NOTE: 174016021 DOES NOT INCLUDE MOUNTING BRACKETS

REF	PART #	QTY	DESCRIPTION
1	174016021	1	STEEL TOOLBOX 36" WITH STAINLESS STEEL DOOR
1A	174016021D	1	SS DOOR ASSEMBLY
1B	07002918	2	STEEL TOOLBOX INSIDE PANEL
1C	07002919-36	1	STEEL TOOLBOX 36" SHELF
2	0308801	1	TOOLBOX MAT 36"
3	37855R	1	TOOLBOX AND OIL TANK MTG BRACKET-RH
4	37855L	1	TOOLBOX AND OIL TANK MTG BRACKET-LH
5	37760	1	TANDEM BOX SPACER CHANNEL (OPT)

48" STEEL TOOLBOX LCG - 174016022

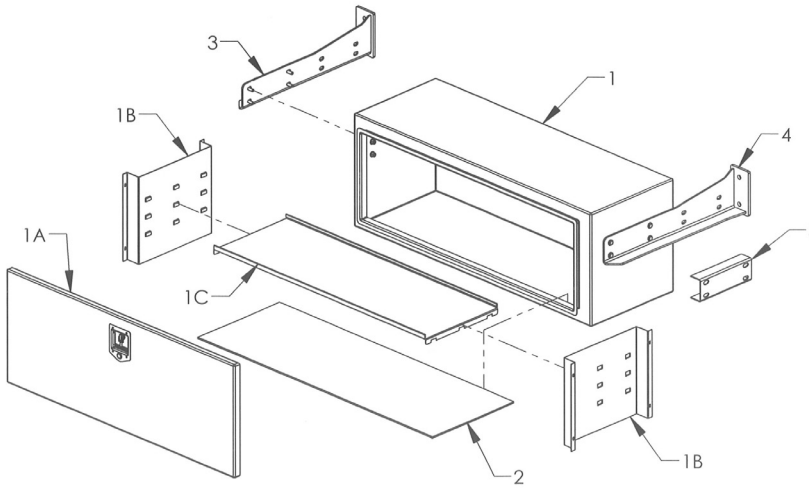

NOTE: 174016022 DOES NOT INCLUDE MOUNTING BRACKETS

REF	PART #	QTY	DESCRIPTION
1	174016022	1	STEEL TOOLBOX 48" WITH STAINLESS STEEL DOOR
1A	174016022D	1	SS DOOR ASSEMBLY
1B	07002918	2	STEEL TOOLBOX INSIDE PANEL
1C	07002919-48	1	STEEL TOOLBOX 48" SHELF
2	0308758	1	TOOLBOX MAT 48"
3	37855R	1	TOOLBOX AND OIL TANK MTG BRACKET-RH
4	37855L	1	TOOLBOX AND OIL TANK MTG BRACKET-LH
5	37760	1	TANDEM BOX SPACER CHANNEL (OPT)

60" STEEL TOOLBOX LCG - 174016023

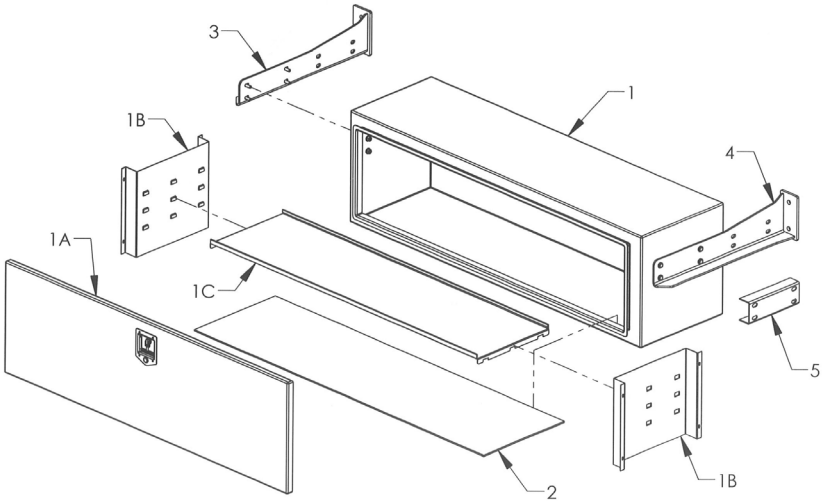

NOTE: 174016023 DOES NOT INCLUDE MOUNTING BRACKETS

REF	PART #	QTY	DESCRIPTION
1	174016023	1	STEEL TOOLBOX 60" WITH STAINLESS STEEL DOOR
1A	174016023D	1	SS DOOR ASSEMBLY
1B	07002918	2	STEEL TOOLBOX INSIDE PANEL
1C	07002919-60	1	STEEL TOOLBOX 60" SHELF
2	0308837	1	TOOLBOX MAT 60"
3	37855R	1	TOOLBOX AND OIL TANK MTG BRACKET-RH
4	37855L	1	TOOLBOX AND OIL TANK MTG BRACKET-LH
5	37760	1	TANDEM BOX SPACER CHANNEL (OPT)

BED MOUNTED CAB PROTECTOR

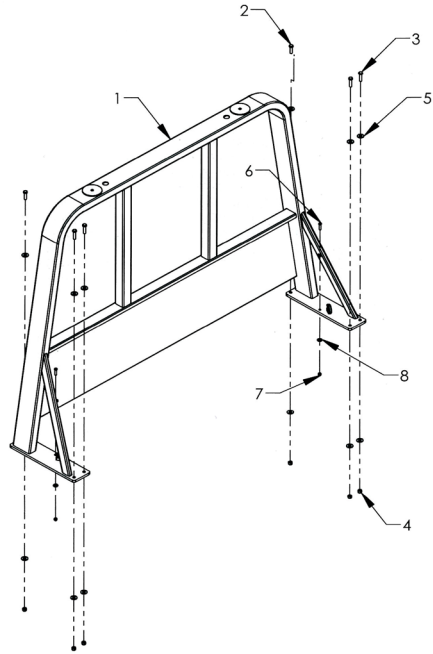

REF	PART #	QTY	DESCRIPTION
1	0809558-38	1	2 x 5 PERIMETER TUBE CAB PROTECTOR - 38"
	0809558-42		2 x 5 PERIMETER TUBE CAB PROTECTOR - 42"
	0809558-45		2 x 5 PERIMETER TUBE CAB PROTECTOR - 45"
	0809558-48		2 x 5 PERIMETER TUBE CAB PROTECTOR - 48"
	0809558-50		2 x 5 PERIMETER TUBE CAB PROTECTOR - 50"
	0809558-52		2 x 5 PERIMETER TUBE CAB PROTECTOR - 52"
	0809558-54		2 x 5 PERIMETER TUBE CAB PROTECTOR - 54"
	0809558-57		2 x 5 PERIMETER TUBE CAB PROTECTOR - 57"
	0809558-60		2 x 5 PERIMETER TUBE CAB PROTECTOR - 60"
	0809558-64		2 x 5 PERIMETER TUBE CAB PROTECTOR - 64"
2	0400211	2	1/2 -13 x 1-3/4 HHCS GR 5 Z
3	0400188	4	1/2 -13 x 2 HHCS
4	0400408	6	1/2 -13 NYLON LOCK NUT ZINC
5	0400492	12	1/2 USS FLAT WASHER ZINC
6	0400132	2	3/8 -16 x 1-1/2 HHCS GR 5 Z
7	0400392	2	3/8 -16 NYLON LOCK NUT ZINC
8	0400480	4	3/8 USS FLAT WASHER ZINC

FRAME MOUNTED PYLON - 0940455-102
LCG BASE ASSEMBLY

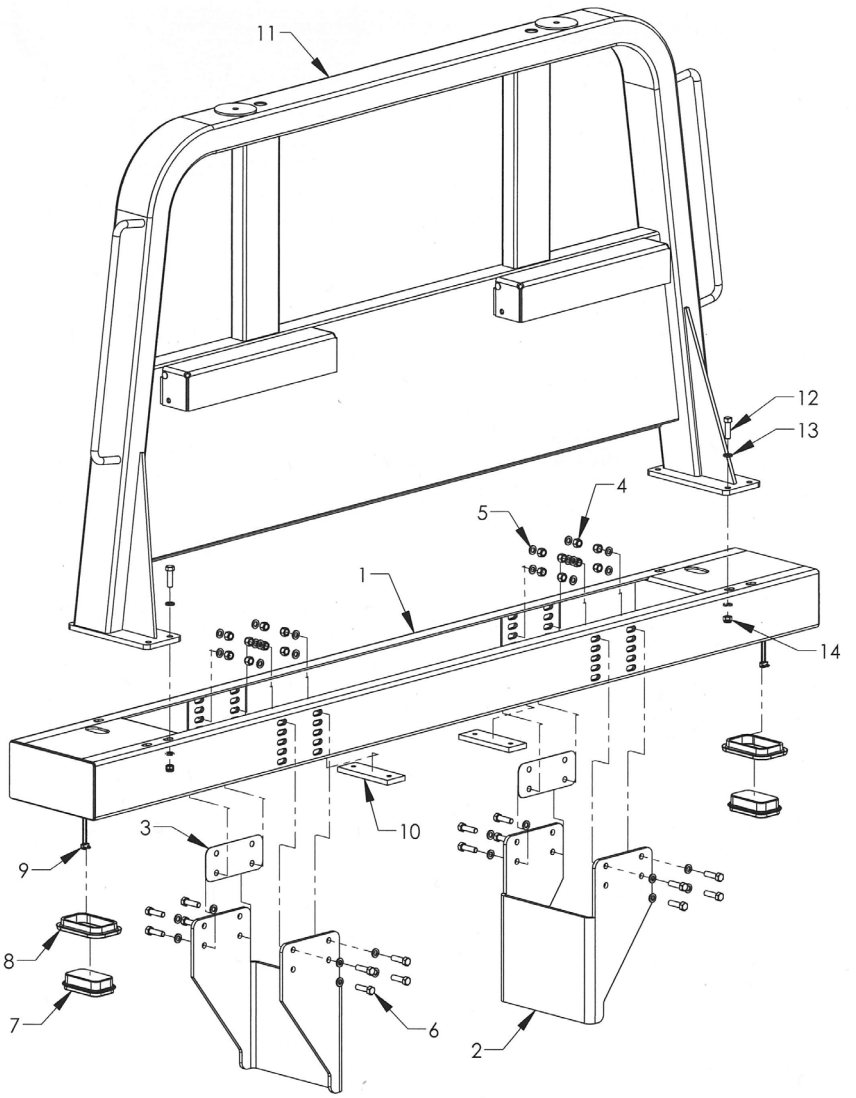

GRAB HANDLES AND CHAIN HANGERS ARE OPTIONAL PYLON EQUIPMENT

FRAME MOUNTED PYLON - 0940455-102

REF	PART #	QTY	DESCRIPTION
1	0811186-102	1	FMP CONVENTIONAL CHAIN TRAY BASE - 102
2	0752751	2	PYLON MTG BRACKET, FMP LCG
3	0752730	2	SHIM, 16 GAGE, FMP BASE
4	0400408	16	NYLON LOCK NUT 1/2-13 UNC
5	0403040	32	FLAT WASHER 1/2 SAE ZP
6	0403058	16	BOLT HHCS 1/2-13 x 1-3/4 GR8 PLAIN
7	0311511	2	CARRIER TAIL LIGHT GROMMET (OPTIONAL)
8	0311509	2	LIGHT RECEPTACLE REVERSE LED (OPTIONAL)
9	0311506	2	LIGHT PIGTAIL 2 PRONG 18 IN. LEAD
10	354614-050	2	FMP 1/2 IN. SPACER SERIES 12 LCG
	354614-100		FMP 1 IN. SPACER SERIES 16 LCG
	354614-150		FMP 1-1/2 IN. SPACER SERIES 20 LCG
	354614-075/175		FMP 2-1/2 IN. SPACER SERIES 20 LCG WOOD
	354614-050/175		FMP 2-1/4 IN. SPACER SERIES 30 LCG
	354614-150/175		FMP 3-1/4 IN. SPACER SERIES 30 LCG WOOD
11	0811185-48	1	FMP 12 PYLON-48
	0811185-50		FMP 12 PYLON-50
	0811185-52		FMP 12 PYLON-52
	0811185-56		FMP 12 PYLON-56
	0811185-60		FMP 12 PYLON-60
	0811185-63		FMP 12 PYLON-63
	0811185-68		FMP 12 PYLON-68
12	0403058	6	BOLT HHCS 1/2-13 x 1-3/4 GR8 PLAIN
13	0403040	12	FLAT WASHER 1/2 SAE ZP
14	0400408	6	NYLON LOCK NUT 1/2-13 UNC

ADJUSTABLE CAB PROTECTOR 09012828-XX (FRAME MOUNTED 5-INCH BASE)

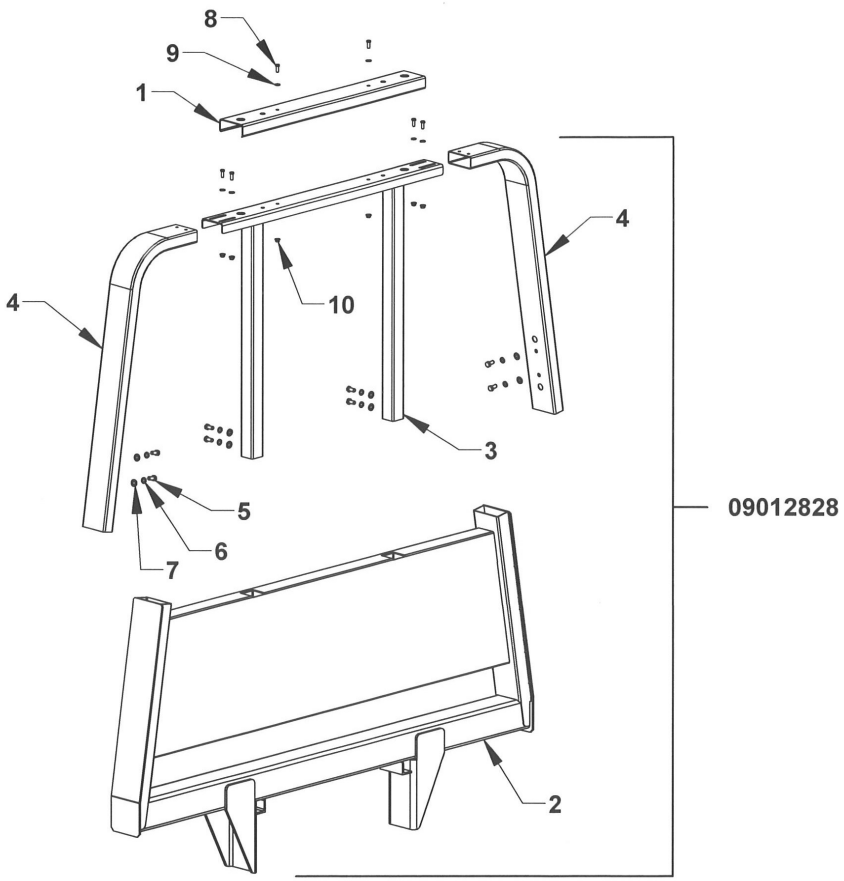

REF. NO.	NO. REQ'D	PART NUMBER	DESCRIPTION
1	1	07011335-46	CAB PROTECTOR TRIM CHANNEL
2	1	08011111	ADJUSTABLE CAB PROTECTR BASE FMP 5" LCG
3	1	08007570	CAB PROTECTOR CENTER SUPPORT
4	2	08007571	ADJUSTABLE SIDE TUBE
5	8	0400176	BOLT HHCS 1/2-13 UNC x 1 GR5
6	8	0400491	LOCK WASHER 1/2 ZP
7	8	0403128	FLAT WASHER 1/2 ZP
8	6	0400126	BOLT HHCS 3/8-16 UNC x 1 GR5
9	6	0400480	FLAT WASHER 3/8 ZP
10	6	04002907	NUT, FLANGED NYLOK 3/8-16 UNC ZP

ADJUSTABLE CAB PROTECTOR 09012829-XX (FRAME MOUNTED 12-INCH BASE)

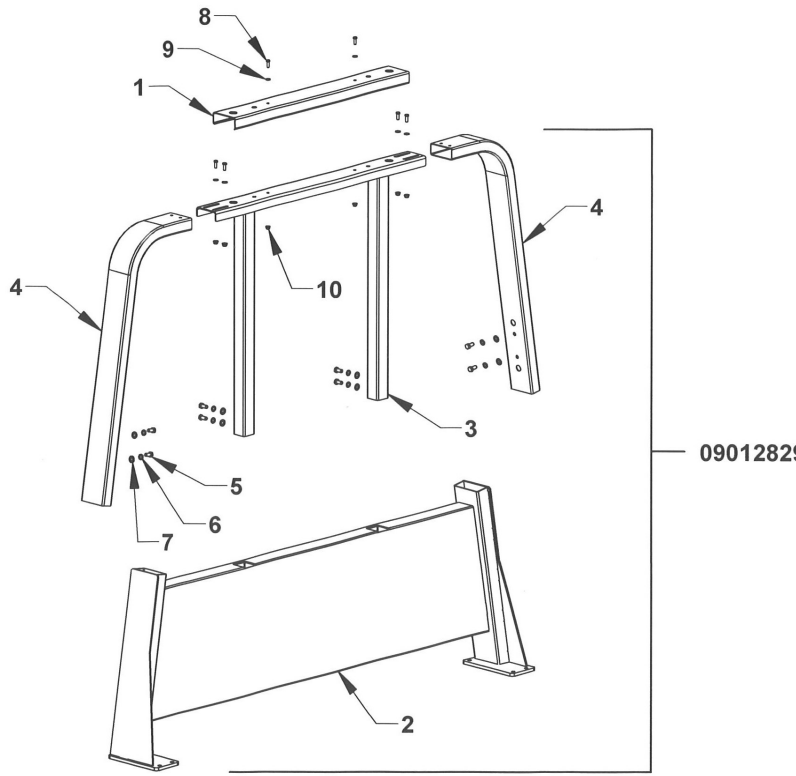

REF. NO.	NO. REQ'D	PART NUMBER	DESCRIPTION
1	1	07011335-46	CAB PROTECTOR TRIM CHANNEL
2	1	08011110	ADJUSTABLE CAB PROTECTR BASE FMP 12"
3	1	08007570	CAB PROTECTOR CENTER SUPPORT
4	2	08007571	ADJUSTABLE SIDE TUBE
5	8	0400176	BOLT HHCS 1/2-13 UNC x 1 GR5
6	8	0400491	LOCK WASHER 1/2 ZP
7	8	0403128	FLAT WASHER 1/2 ZP
8	6	0400126	BOLT HHCS 3/8-16 UNC x 1 GR5
9	6	0400480	FLAT WASHER 3/8 ZP
10	6	04002907	NUT, FLANGED NYLOK 3/8-16 UNC ZP

ADJUSTABLE CAB PROTECTOR 09008330-XX (BED MOUNTED)

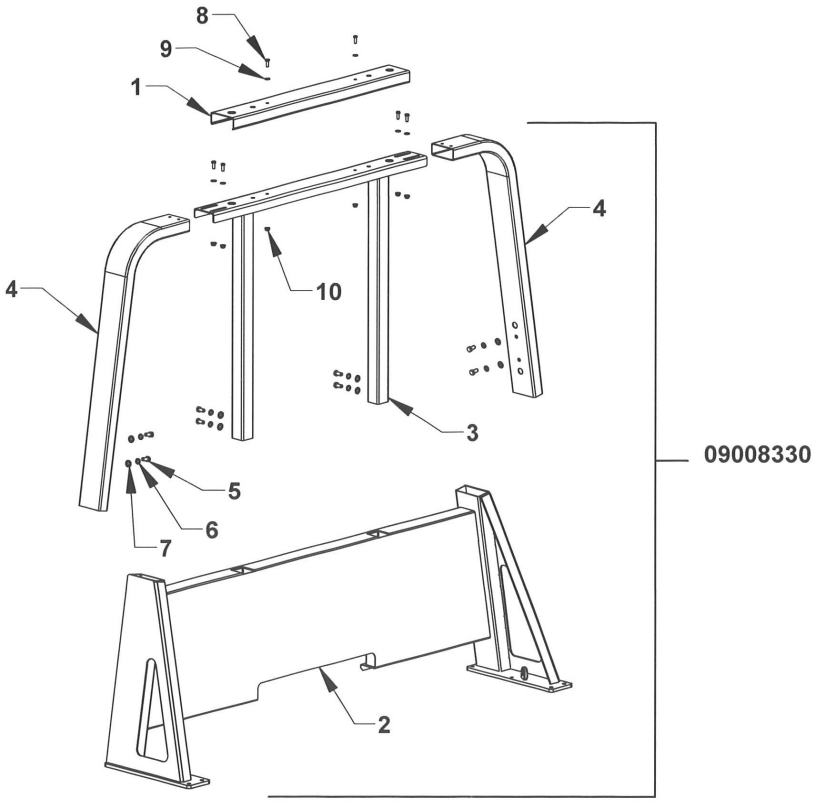

REF. NO.	NO. REQ'D	PART NUMBER	DESCRIPTION
1	1	07011335-46	CAB PROTECTOR TRIM CHANNEL
2	1	08017569	ADJUSTABLE CAB PROTECTR BASE
3	1	08007570	CAB PROTECTOR CENTER SUPPORT
4	2	08007571	ADJUSTABLE SIDE TUBE
5	8	0400176	BOLT HHCS 1/2-13 UNC x 1 GR5
6	8	0400491	LOCK WASHER 1/2 ZP
7	8	0403128	FLAT WASHER 1/2 ZP
8	6	0400126	BOLT HHCS 3/8-16 UNC x 1 GR5
9	6	0400480	FLAT WASHER 3/8 ZP
10	6	04002907	NUT, FLANGED NYLOK 3/8-16 UNC ZP

BODY LOCK ASSEMBLY - 364220K

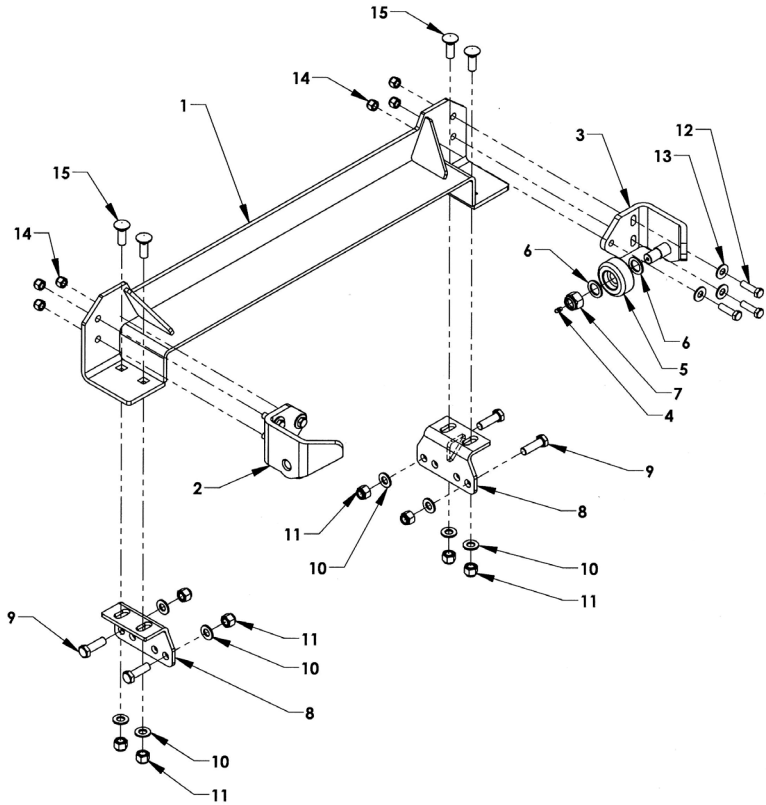

REF. NO.	NO. REQ'D	PART NUMBER	DESCRIPTION
1	1	364220	LCG BODY LOCK WELDMENT-SETBACK CAPABLE
2	1	36315L	BODY LOCK HOLD-DOWN - LH
3	1	36315R	BODY LOCK HOLD-DOWN - RH
4	2	0306382	GREASE FITTING 1/4-28
5	2	36310	ROLLER WHEEL
6	4	0400470	FLAT WASHER 1
7	2	04001225	NYLON LOCK NUT, 7/8-14 UNF
8	2	0809183	MOUNTING BRACKET
9	4	0400260	BOLT, 5/8-11 HHCS UNC x 2 GRADE 5
10	8	0400505	FLAT WASHER 5/8
11	8	0400421	NYLON LOCK NUT, 5/8-11 UNC
12	6	0400218	BOLT, HHCS 1/2-20 UNF x 1-1/4
13	6	0400492	FLAT WASHER, 1/2 IN.
14	6	0400413	NYLON LOCK NUT, 1/2-20 UNF
15	4	0403068	CARRIAGE BOLT 5/8-11 x 1-3/4

MUDFLAP COMPONENTS

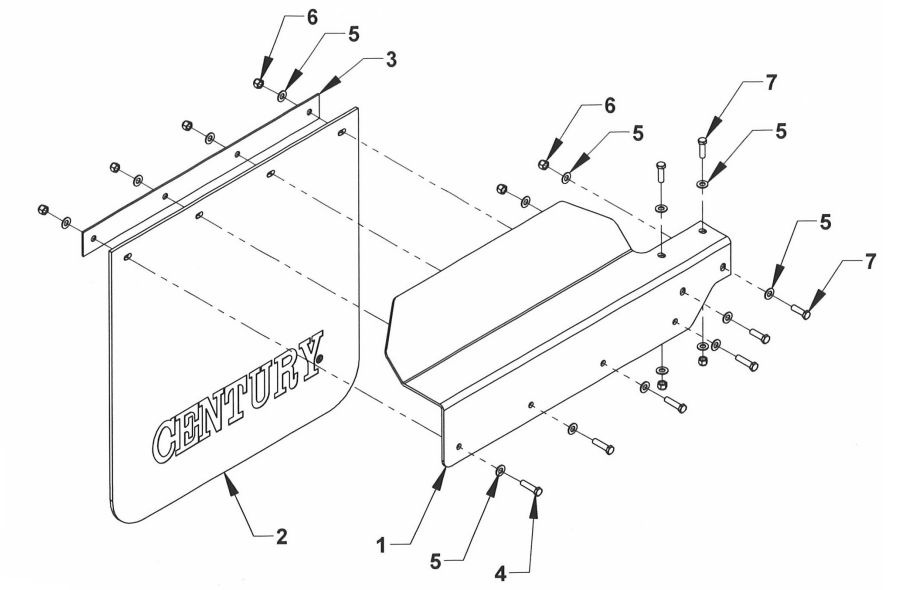

REF	PART #	QTY	DESCRIPTION
1	0751024L	1	MUDFLAP MOUNTING BRACKET (LH)
	0751024R	1	MUDFLAP MOUNTING BRACKET (RH)
2	0308419	1	MUDFLAP 24 x 24
3	0750340	1	MUDFLAP SUPPORT BAR
4	0400132	4	BOLT HHCS 3/8-16 UNC x 1-1/2 GR5
5	0400480	16	WASHER 3/8
6	0400392	8	3/8-16 NYLON LOCK NUT
7	0400122	4	BOLT HHCS 3/8-16 UNC x 1-1/.4 GR5

PINTLE ATTACHMENT GROUP

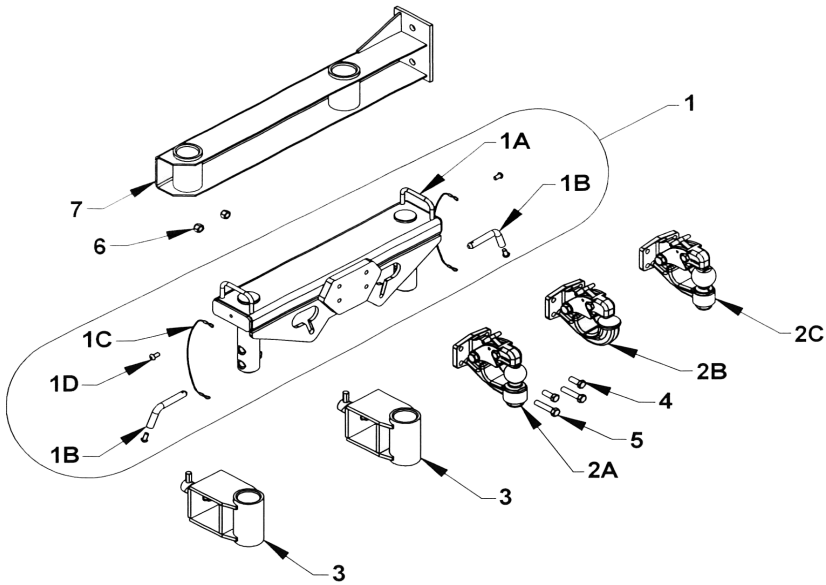

REF	PART NO.	QTY	DESCRIPTION
1	66370G	1	PINTLE ATTACHMENT
1A	66370	1	PINTLE ATTACHMENT WELDMENT
1B	66378	2	RETAINING PIN
1C	65292	2	LANYARD
1D	0403004	4	BOLT BHCS 3/8-16 x 3/4
2A	174017159	1	TOW BALL PINTLE HITCH - 2 IN. BALL
2B	174017156	1	PINTLE HOOK
2C	174017172	1	TOW BALL PINTLE HITCH - 2-5/16 IN. BALL
3	65460	1	FORK HOLDER - 3.5 x 3.5
4	04000005	2	BOLT HHCS 1/2-13 x 1.25 GRADE 8 SECURE WITH LOCTITE
5	0403056	2	BOLT HHCS 1/2-13 x 2-1/2 GRADE 8
6	0400408	2	NUT, NYLOK 1/2-13
7	66385	1	PINTLE ATTACHMENT STORAGE BRACKET

RECOVERY ROLLER GUIDE ATTACHMENT - 09018752 (FOR USE ON STEEL BEDS ONLY)

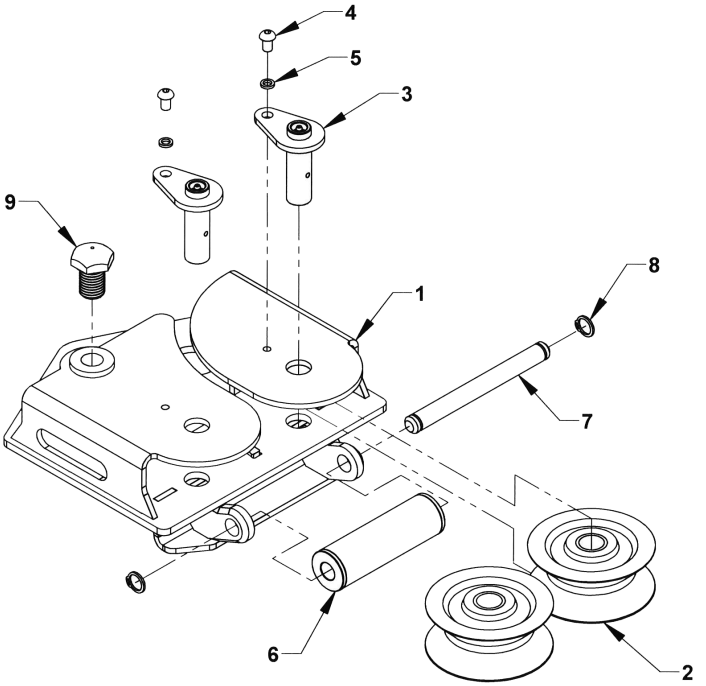

REF	PART NO.	QTY	DESCRIPTION
1	08016353	1	RECOVERY ROLLER GUIDE ATTACHMENT
2	09018753	2	PULLY, CABLE ROLLER GUIDE
3	08008889	2	KEEPER PIN, CABLE ROLLER GUIDE
4	0403161	2	BOLT, BHCS, 3/8-16 UNC x 5/8
5	0400464	2	LOCK WASHER 5/16
6	0809640	1	ROLLER ASSEMBLY 1.75 INCH DIAMETER
7	07013385	1	PIN, CABLE ROLLER GUIDE
8	03012289	2	RETAINING RING 3/4 SHAFT OD
9	07013420	1	BOLT, HHCS, 1-8 UNC x 1-1/2

LCG RETRACTABLE LADDER

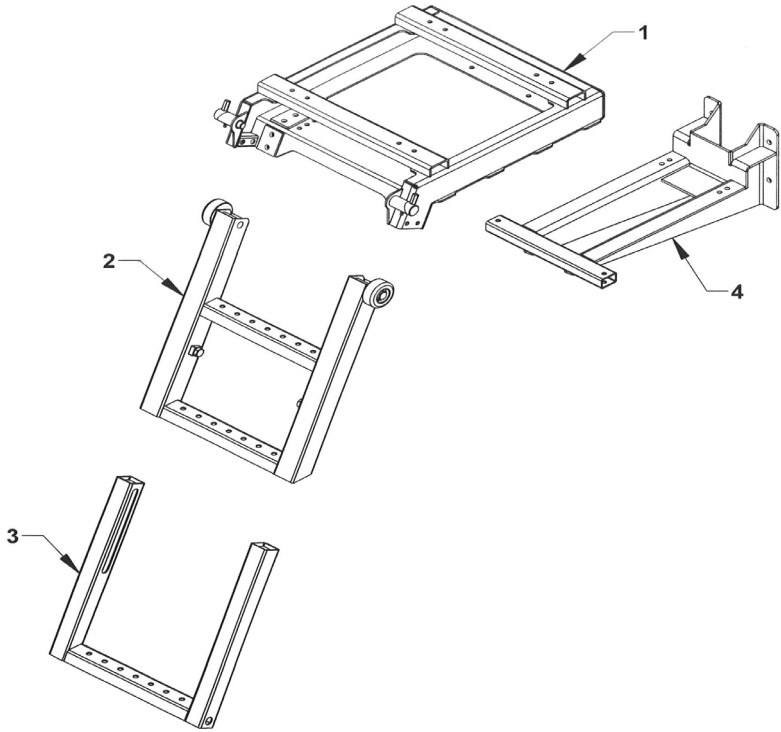

REF	PART #	QTY	DESCRIPTION
	391000	1	LADDER ASSEMBLY
1	391010	1	LADDER CARRIAGE
2	391020	1	UPPER RUNG ASSEMBLY
3	391030	1	LOWER RUNG ASSEMBLY
4	391050	1	FRAME MOUNTING BRACKET - OPTIONAL