CENTURY®

OWNER'S MANUAL

1140 KB RXP ROTATOR

PARTS

NOTE: MANUAL including SPECIFICATIONS subject to change without notice.
All ratings specified are based on structural factors only, not vehicle capacities or capabilities.

Miller Industries Towing Equipment Inc.
8503 Hilltop Drive
Ooltewah, Tennessee 37363
Phone (423) 238-4171 • FAX (423) 238-5371

FORM NO. 05005406
OCT 2023
Price $25.00

LIMITED WARRANTY

MILLER INDUSTRIES TOWING EQUIPMENT INC., hereinafter referred to as MILLER, warrants to the original purchaser that each new MILLER wrecker or other MILLER products will be free from defects in material and workmanship for a period of twelve (12) months from date placed in service, but in no event shall such warranty period exceed twenty-four (24) months from date of manufacture by MILLER. The purchaser must promptly notify MILLER in writing of any failure in material or workmanship. In no event shall MILLER accept such notification later than twenty-four (24) months from date of delivery or twelve (12) months from date placed in service, whichever is earlier.

MILLER's obligation under this warranty, statutory or otherwise, is limited to the repair or replacement at the MILLER factory, or at a point designated by MILLER, of such part or parts as shall appear upon inspection by MILLER to be defective in material or workmanship. New or remanufactured parts will be used for any replacement at MILLER's option. This warranty is not transferable. This warranty does not obligate MILLER to bear the cost of labor or transportation charges in connection with the repair or replacement of any parts found to be defective, nor shall it apply to a product upon which repairs or alterations have been made unless authorized by MILLER.

EXCEPT AS EXPRESSLY SET FORTH IN THIS WARRANTY, MILLER MAKES NO OTHER WARRANTY, EXPRESS OR IMPLIED, AND HEREBY DISCLAIMS ALL OTHER WARRANTIES INCLUDING, BUT NOT LIMITED TO, THE IMPLIED WARRANTIES OF MERCHANTABILITY AND FITNESS FOR A PARTICULAR PURPOSE. MILLER shall in no event be liable for claimed downtime, claimed loss of profits or goodwill, or any other special, incidental, indirect, or consequential damages concerning or relating to any product or parts, whether based on negligence, strict liability, breach of contract, breach of warranty, misrepresentation or any other legal theory, regardless of whether the loss resulted from any general or particular requirement which MILLER knew or had reason to know about at the time of sale.

MILLER MAKES NO WARRANTY, EXPRESS OR IMPLIED, AS TO THE FINISHED PRODUCTS MANUFACTURED OR SUPPLIED BY ANOTHER MANUFACTURER AND SUPPLIED BY MILLER TO PURCHASER, including, but not limited to, any vehicle to which a MILLER product may be affixed or any accessories or wire rope, and MILLER EXPRESSLY DISCLAIMS ANY IMPLIED WARRANTIES OF MERCHANTABILITY OR FITNESS FOR A PARTICULAR PURPOSE AS TO SUCH EQUIPMENT OR PRODUCTS. This language shall in no way affect or diminish the rights of the purchaser to rely on such warranties as are extended by such manufacturers or suppliers. MILLER shall, to the extent permitted under applicable law, pass on to the purchaser such manufacturer's or seller's warranty.

MILLER, whose policy is one of continuous improvement, reserves the right to improve its products through changes in design or materials as it may deem desirable without being obligated to incorporate such changes in products previously sold. This warranty is not intended to cover or include the following items, which are set forth by way of example and not limitation:

A. Normal deterioration of trim, paint, lettering, and appearance items due to wear or exposure to weather, road conditions, road treatments, etc.
B. Any damage or defect due to accident, misuse, abuse, improper or unauthorized repairs, failure to provide reasonable and necessary maintenance, or uses for which the equipment was not designed or intended.
C. Alterations or modifications that affect performance, operation or reliability.
D. Normal maintenance parts including, but not limited to, wear pads, bushings, wire rope, mud flaps, fenderettes, light bulbs, hydraulic oil, filters, and tow sling belts.

IT IS EXPRESSLY UNDERSTOOD THAT MILLER MAKES NO IMPLIED WARRANTY THAT MILLER PRODUCTS SHALL BE FIT FOR THE PURPOSE OF LIFTING OR MOVING PEOPLE OR FOR ANY OTHER IMPROPER USE.

Miller Industries Towing Equipment Inc.
8503 Hilltop Drive
Ooltewah, Tennessee 37363
Telephone (423) 238-4171

SERIAL NUMBER

OWNER, USER AND OPERATOR:

We appreciate your choice of our towing and recovery unit for your application. Our number one priority is user safety which is best achieved by our joint efforts. We feel that you can make a major contribution to safety if you, as the equipment owner and operator:

1. **Comply with Federal, State, and Local Regulations.**
2. **Read, Understand, and Follow the Instructions in this Manual.**
3. **Use Good, Safe Work Practices in a Common Sense Way.**
4. **Only have Authorized and Trained Personnel performing maintenance on the Towing and Recovery Unit.**

Use of other than Factory or Factory Authorized Parts may render the Warranty as null and void.

© 2023 MILLER INDUSTRIES TOWING EQUIPMENT INC. All rights reserved. Reproduction or use, without express permission, of editorial or pictorial content, in any manner, is prohibited.

TABLE OF CONTENTS

It is assumed by the manufacturer that the Owner/Operator has a thorough knowledge of the accepted and lawful retrieval and towing methods as dictated by his city, county or state. The manufacturer rejects any liability claim that may result from the incorrect or unlawful application of its equipment.

Section I - PARTS

09009128 BASIC UNIT ASSEMBLY 1140 RXP KNEEBOOM . . . . . I-2 thru I-83

09000097 ILLUMINATED LEGEND ASSEMBLY LH UPPER . . . . . I-84 & I-85

09000135 ILLUMINATED LEGEND ASSEMBLY RH UPPER . . . . . I-86 & I-87

09000139 ILLUMINATED LEGEND ASSEMBLY 27.5. . . . . I-88 & I-89

09002247 CONTROL ASSEMBLY 11 HANDLE WV . . . . . I-90 & I-91

09002910 PUMP KIT, 4K KNEEBOOM . . . . . I-92 & I-93

09002949 ILLUMINATED LEGEND ASSEMBLY LH . . . . . I-94 & I-95

09002950 ILLUMINATED LEGEND ASSEMLBY LH . . . . . I-96 & I-97

0908745 ILLUMINATED LEGEND ASSEMBLY. . . . . I-98 & I-99

09004266 UNDERLIFT BOOM ASSEMBLY . . . . . I-100 thru I-105

09003929 UNDERLIFT HORIZONTAL BOOM ASSEMBLY . . . . . I-106 thru I-115

0908282 INNER BOOM ASSEMBLY. . . . . I-116 & I-117

09009470 SUBFRAME ASSEMLBY, 1140 RXP KB . . . . . I-118 thru I-145

09000229 PIVOT MTG HOUSE LOCK ASSEMBLY . . . . . I-146 & I-147

09002243 VALVE ASSEMBLY KB MAIN . . . . . I-148 & I-149

09002244 VALVE ASSEMBLY KB U/L . . . . . I-150 & I-151

TABLE OF CONTENTS

It is assumed by the manufacturer that the Owner/Operator has a thorough knowledge of the accepted and lawful retrieval and towing methods as dictated by his city, county or state. The manufacturer rejects any liability claim that may result from the incorrect or unlawful application of its equipment.

Section I - PARTS (cont'd)

09002246 VALVE ASSEMBLY PRESSURE REDUCING . . . . . I-152 & I-153

09009468 OUTRIGGER CONTROL VALVE ASSEMBLY . . . . . I-154 thru I-161

0910616 OUTRIGGER CONTROL VALVE . . . . . I-162 & I-163

0910635 OUTRIGGER BLEED VALVE . . . . . I-164 & I-165

0910915 FRONT VALVE MOUNTING . . . . . I-166 & I-167

0906572 WINCH CABLE STOW . . . . . I-168 & I-169

0908055 REVERSING SHEAVE . . . . . I-170 & I-171

0908062 CABLE SHEAVE AND TENSIONER ASSEMBLY . . . . . I-172 & I-173

0908054 CABLE, SHEAVE SWIVEL ASSEMBLY . . . . . I-174 & I-175

0908063 TENSIONER ASSEMBLY . . . . . I-176 & I-177

0908432 ROTATOR PINLOCK ASSEMBLY . . . . . I-178 & I-179

0911959 D-RING PARTS . . . . . I-180 & I-181

24679012 LH LEG ASSEMBLY . . . . . I-182 thru I-185

24679013 RH LEG ASSEMBLY . . . . . I-186 thru I-189

25559013 RESERVOIR ASSEMBLY . . . . . I-190 thru I-197

0906532 SWIVEL - BOOM ASSEMBLY . . . . . I-198 & I-199

TABLE OF CONTENTS

It is assumed by the manufacturer that the Owner/Operator has a thorough knowledge of the accepted and lawful retrieval and towing methods as dictated by his city, county or state. The manufacturer rejects any liability claim that may result from the incorrect or unlawful application of its equipment.

Section I - PARTS (cont'd)

0908418 MUDFLAP CENTURY ROTATOR . . . . . I-200 & I-201

0910231 BOOM ASSEMBLY 1140 3-STAGE . . . . . I-202 thru I-211

0906535 SWIVEL - BOOM ASSEMBLY . . . . . I-212 & I-213

0910819 BOOM EXTEND SYSTEM . . . . . I-214 thru I-217

0908356 SLIDE PAD ASSEMBLY . . . . . I-218 & I-219

0910232 WRECKER FRAME ASSEMBLY . . . . . I-220 thru I-233

0910235 SWING DRIVE ASSEMBLY . . . . . I-234 & I-235

0910236 SWING CONTROL VALVE ASSEMBLY . . . . . I-236 & I-237

0910238 SWING LIMIT VALVE ASSEMBLY . . . . . I-238 & I-239

0911199 HYDRAULIC SWIVEL PLATE ASSEMBLY . . . . . I-240 & I-241

0911335 12V AIR SYSTEM KIT . . . . . I-242 thru I-249

0910411 REAR OUTRIGGER 4-STAGE ASSEMBLY . . . . . I-250 thru I-261

0906963 PIN REAR OUTRIGGER PAD ASSY . . . . . I-262 & I-263

0912051 CENTURY SPADE KIT . . . . . I-264 & I-265

0911123 PIN ASSEMBLY SPADE LOCK. . . . . I-266 & I-267

0911124 PIN ASSEMBLY SPADE PIVOT . . . . . I-268 & I-269

TABLE OF CONTENTS

It is assumed by the manufacturer that the Owner/Operator has a thorough knowledge of the accepted and lawful retrieval and towing methods as dictated by his city, county or state. The manufacturer rejects any liability claim that may result from the incorrect or unlawful application of its equipment.

Section I - PARTS (cont'd)

0911167 SPADE ASSEMBLY . . . . . I-270 & I-271

0910838 BUA '10 ROTATOR ALUMINUM BODY . . . . . I-272 & I-273

0910935 CROSSBAR ASSEMBLY 5X5 CENTURY . . . . . I-274 & I-275

0911237 ILLUMINATED LEGEND ASSEMBLY RH LOWER. . . . . I-276 & I-277

09000120 ILLUMINATED LEGEND ASSEMBLY . . . . . I-278 & I-279

09000142 ILLUMINATED LEGEND ASSEMBLY 24.75. . . . . I-280 & I-281

0911324 RH CONTROL STATION ASSEMBLY 5 WINCH . . . . . I-282 thru I-285

0911804 AIR REGULATOR ASSEMBLY . . . . . I-286 & I-287

NOTES

Section I - PARTS

REF. 05005406

This Section is provided by the manufacturer for the purpose of ordering any component part of the **1140 Kneeboom RXP Rotator** that may be required when part replacement is necessary. Be certain to use only original equipment replacement parts for warranty purposes as well as for keeping your unit in its original state and optimum operating capacities.

When ordering replacement or spare parts be sure to provide the following information to the manufacturer's **Parts Department**.

1. **Manual Number & Date of Publication**
2. **Manual Page Number**
3. **Page Title**
4. **Reference Number of Part Desired**
5. **Part Number**
6. **Part Description**
7. **Quantity of Part Desired**
8. **Unit Serial Number**

Providing this information will help ensure that the correct parts will be delivered to you in an expedient manner without delay. Should additional information be required for repair or replacement of certain components, contact your Wrecker Manufacturer Authorized Representative.

The Manufacturer reserves the right, without notice or obligation, to improve or modify their products, which may change the specifications, models and feature availability.

09009128 BASIC UNIT ASSEMBLY 1140 RXP KNEEBOOM

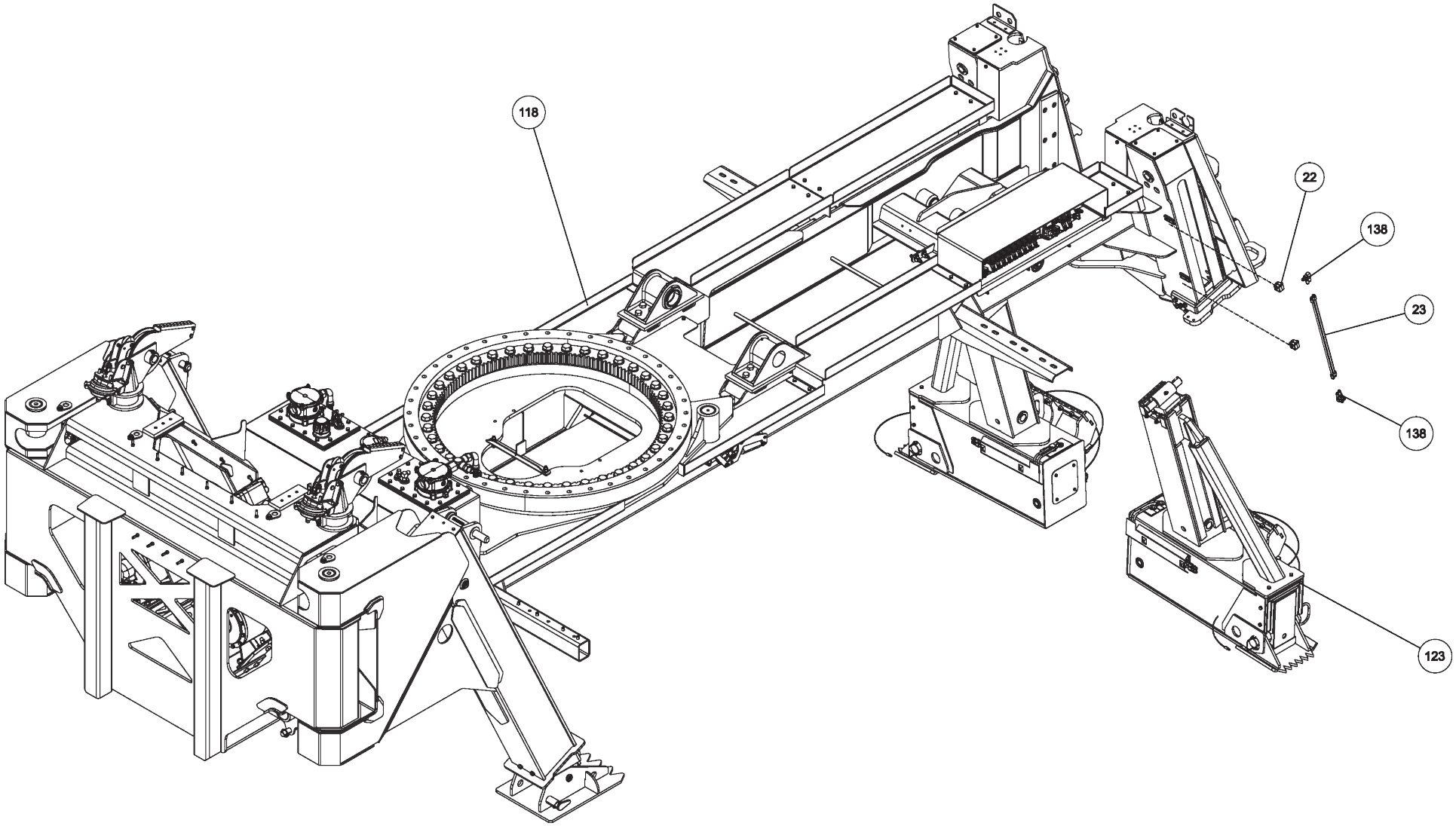

09009128 BASIC UNIT ASSEMBLY 1140 RXP KNEEBOOM (cont'd)

ITEM	PART NUMBER	DESCRIPTION	QTY
	09009128	BASIC UNIT ASSEMBLY 1140 RXP KB	
1	0300113	GREASE FITTING, 1/4-28 STR	1
2	03003419	HOSE, HYD 132" LG	1
3	03003420	HOSE, HYD 60" LG	1
4	03003421	HOSE, HYD 18"LG	3
5	03003424	HOSE, HYD 138"	1
6	03003425	HOSE, HYD 90" LG	4
7	03003426	HOSE, HYD 45" LG	6
8	0300364	CLAMP-HOSE,0.875"-2.75" 50"LBS	2
9	0300434	FITTING, HOSE BARB, 2	1
10	0300558	HOSE, SUCTION 2"ID 100R4 (C4)	1
11	0300835	KNOB-BOOM (UP-DOWN)	1
12	0300837	KNOB-BOOM (IN-OUT)	1
13	0300865	FITTING, CONNECTOR 8MJ-8MJ	5
14	0301113	HOSE HYD, 82"	2
15	0301207	HOSE HYD, 72"	4
16	0301377	FITTING, TEE,3/8" JIC	1
17	0301388	ELBOW, 8MJ-8MB90	3
18	0301422	FITTING, 6MJ-6MJ SMALL	4
19	0301473	HOSE HYD, 18" LG	2
20	0301522	ADAPTER, 6MJ-6MB	1
21	0301529	HOSE HYD, 58	2
22	03015922	STAUFF CLAMP, 3/8 TWIN	4
23	03016142	TUBE, HYD ASSY SF TO O/R	4
24	0301695	HOSE HYD, 91"	1
25	0301837	INLINE ORIFICE	4
26	0301909	RECEPTACLE BOOT	1
27	0301946	FITTING, BLKHD CONNECT	3
28	0301948	HD 7 WAY TRAILER CONNECT	1
29	0301961	BALL VALVE 2	1
30	0302056	HOSE HYD, 183"	5
31	0302205	GAUGE, FLUSH MNTG-6000 PSI	2
32	0302312	HOSE HYD, 43" LG 12G2AT	1
33	0302367	PIPE NIPPLE - 2 X 4	1
34	0302372	HOSE HYD, 240" LG	4
35	0302508	FITTING, ELL 8MJ-8MB 90LL	3
36	0302534	FITTING, 45 DEG ELBOW	2
37	0302604	HOSE HYD, 44"	2
38	0302632	HOSE HYD, 40"	8
39	0302805	HOSE HYD, 10"	1
40	0302856	KNOB-TILT, 3/8-16 THREAD	1
41	0302881	HOSE HYD, 45"	1
42	0303170	HOSE, HYD. 75"	1
43	0303340	HOSE HYD, 50" LG	1
44	0303379	KNOB, SWING CW - CCW	1
45	0303380	KNOB-UNDERLIFT (IN-OUT)	1
46	0303381	KNOB - UNDERLIFT (UP-DN)	1

ITEM	PART NUMBER	DESCRIPTION	QTY
47	0303391	HOSE 8AT2(8FJX-8FJ90) 110"	3
48	0303538	FITT, ADAPTER -BRASS 8FP-6MP	1
49	0303539	QUICK DISCONNECT 3/8 FPT	1
50	0303950	FITTING 45DEG DOT BRASS	1
51	0304363	QUICK DISCONNECT 1/2 FPT	2
52	0306537	EMERGENCY SWITCH	2
53	0306540	ROTARY SELECT SWITCH OPERATOR	12
54	0306870	HOSE HYDR - 96"	4
55	0306921	PIPE PLUG, 2" SQ HD	1
56	0307061	WINCH-35K dp 2-SP N.DRUM W/TEN	3
57	0307452	HOSE, HYD 146" LG	4
58	0307472	HOSE, HYD ASSY 24" LG	1
59	0307604	KNOB, RED LONG - SK0700-07	5
60	0310314	HOSE ASSY - 42" LG	4
61	0310456	PUSH BUTTN OPER W/MTG(RED) N/C	2
62	0310581	hose assy- 96" 8 fjx-10fjx90	4
63	0310637	PLUG, HOLE	2
64	0311191	ROLLER, POLY, 4" X 5/8"	2
65	0311305	T-BOLT CLAMP 1 3/8 TO 1 9/16	4
66	0311355	HOBBS HOURMETER	1
67	0311417	HOSE, 196" 3/8 2 X STRAIGHT	2
68	0311426	HOSE ASSY, 80" 4FJX-4FJX45	16
69	0311755	WATER SEPARATOR-MONNIER	1
70	0313129	HOSE, 1 SUCTION 16C4	34
71	0400005	SCREW, 6-32X1/2 PRH SS	6
72	0400012	LKWASHER, #8 SS	8
73	0400021	SCREW, 8-32X1/2 PRH SS	12
74	04000381	SS BHSCS 1/4-20 X 1	15
75	0400062	SCREW, 1/4-20X3/4 THC	3
76	0400066	SCREW, 1/4-20X3/4 HHC GR5	8
77	0400288	SCREW, 3/4-10X2-1/2 HHC GR8	16
78	0400307	SCREW, 7/8-9X4 HHC GR8	16
79	0400369	NUT, 1/4 SPR J	11
80	0400431	NUT, 3/4-10 LOK GR8	16
81	0400437	NUT, 7/8-9 LOK GR8	16
82	0400452	LKWASHER, 1/4	8
83	0400454	WASHER, 1/4 SS	2
84	0400473	WASHER, 7/8 PL GR8	16
85	0400489	WASHER, 3/4 SAE GR8	32
86	0400491	LKWASHER, 1/2	20
87	0400492	USS FLAT WASHER, 1/2	2
88	0400497	WASHER, 1/2 GR8	6
89	0400498	WASHER, 1/2X2X0.125	14
90	0400554	PIN, 3/8X1 SPR	3
91	0400900	NUT, 1/2-13 LOK JAM	2
92	0402020	SCREW, 1/4-20X3/4 HHC SS	2
93	0402021	SCREW, 1/4-20X1 HHC SS	13

ITEM	PART NUMBER	DESCRIPTION	QTY
94	0402044	SCREW, 3/8-16X1-1/2 HHC SS	8
95	0402080	WASHER, #8 SS	8
96	0402094	NUT, HEX 6-32 SS	6
97	0402110	WASHER, 1/4 SS	17
98	0402111	LKWASHER, 1/4 SS	30
99	0402113	NUT, 1/4-20 LOK SS	2
100	0402114	NUT, 1/4-20 LOK REV SS	11
101	0402120	WASHER, 3/8 SS	8
102	0402123	NUT, 3/8-16 LOK SS	8
103	07005922	MOUNT-HYD GAUGE	1
104	0712230	BOSS, TURNTABLE LOCK	4
105	0722104	ANGLE - WINCH MOUNTING	4
106	0724651	COVER	2
107	08005607	WINCH MOUNT, 35K FRONT	2
108	08005608	WINCH MOUNT, 35K REAR	2
109	0806994	HOUSE LOCK INDICATOR WELDMENT	4
110	0810433	HHU CHAIN ROLLER BRACKET, LH	1
111	0810434	HHU CHAIN ROLLER BRACKET, RH	1
112	09000097	ILLUMINATED LEGEND ASSY-LT UPP	1
113	09000135	ILLUMINATED LEGEND ASSY-RT UPP	1
114	09002247	CONTROL ASSY, 11 HANDLE WV	1
115	09002910	PUMP KIT, 4K KNEE BOOM	1
116	09002949	ILLUM LEGEND LT 1150 KNEE	1
117	09004266	U/L BOOM ASSEMBLY (SHORT)	1
118	09009470	SUBFRAME ASSY, 1140 RXP KB 12V	1
119	0906532	SWIVEL - BOOM ASSEMBLY	1
120	0908418	KIT-MUDFLAP CENTURY ROTATOR	1
121	0910231	BOOM ASSEMBLY 1140 (3-STAGE)	1
122	0910232	WRECKER FRAME ASSEMBLY - 1140	1
123	0910411	KIT - REAR OUTRGR 4-STG LG BOS	1
124	0910838	BUA '10 ROT AL BODY W/ XP TRI	1
125	0910935	XBAR ASY HRDWR-XHD 5X5 CENTURY	1
126	0911237	ILLUM LEGEND ASSY RH LWR WLV	1
127	0911324	RH CTL STATION ASSY 5 WINCH WV	1
128	0911804	AIR REGULATOR-GAUGE ASSEMBLY	4
129	24773017	HOSE ASSEMBLY 140"LG	2
130	24773018	HOSE ASSEMBLY 140"LG	2
131	9010520	FITTING-ELBOW 1/4T-1/4NPT	5
132	9024041	SWITCH, ROCKER SPST RED 12V21A	22
133	9041402	1/2 NC X 1 1/4 HHCS PLT GR8	6
134	9041403	1/2 NC X 1 1/2 HHCS PL GR8	14
135	9402970	TOOLBOX MTG. PAD	14
136	942480011	PLATE,SLOT-SS REAR WASHER TBOX	16
137	AWS-6821-A	HOSE ASSY-PRESSURE	10
138	FC41	FITTING-90DEG BLKHD ELB W/ NUT	8
139	HC1291	FITTING, 4MJ-4MB STR THR	16

09009128 BASIC UNIT ASSEMBLY 1140 RXP KNEEBOOM (cont'd)

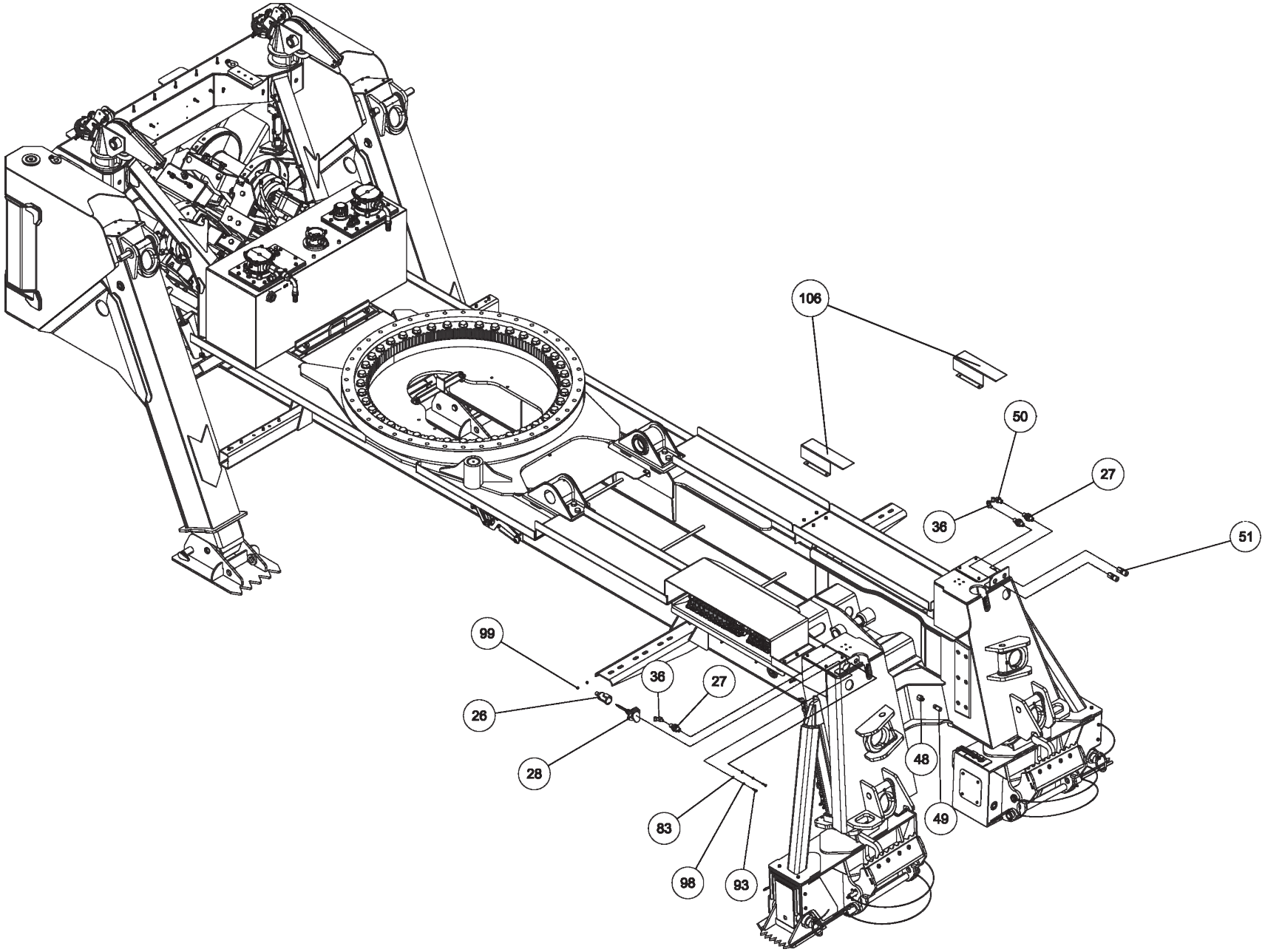

09009128 BASIC UNIT ASSEMBLY 1140 RXP KNEEBOOM (cont'd)

ITEM	PART NUMBER	DESCRIPTION	QTY
	09009128	BASIC UNIT ASSEMBLY 1140 RXP KB	
1	0300113	GREASE FITTING, 1/4-28 STR	1
2	03003419	HOSE, HYD 132" LG	1
3	03003420	HOSE, HYD 60" LG	1
4	03003421	HOSE, HYD 18"LG	3
5	03003424	HOSE, HYD 138"	1
6	03003425	HOSE, HYD 90" LG	4
7	03003426	HOSE, HYD 45" LG	6
8	0300364	CLAMP-HOSE,0.875"-2.75" 50"LBS	2
9	0300434	FITTING, HOSE BARB, 2	1
10	0300558	HOSE, SUCTION 2"ID 100R4 (C4)	1
11	0300835	KNOB-BOOM (UP-DOWN)	1
12	0300837	KNOB-BOOM (IN-OUT)	1
13	0300865	FITTING, CONNECTOR 8MJ-8MJ	5
14	0301113	HOSE HYD, 82"	2
15	0301207	HOSE HYD, 72"	4
16	0301377	FITTING, TEE,3/8" JIC	1
17	0301388	ELBOW, 8MJ-8MB90	3
18	0301422	FITTING, 6MJ-6MJ SMALL	4
19	0301473	HOSE HYD, 18" LG	2
20	0301522	ADAPTER, 6MJ-6MB	1
21	0301529	HOSE HYD, 58	2
22	03015922	STAUFF CLAMP, 3/8 TWIN	4
23	03016142	TUBE, HYD ASSY SF TO O/R	4
24	0301695	HOSE HYD, 91"	1
25	0301837	INLINE ORIFICE	4
26	0301909	RECEPTACLE BOOT	1
27	0301946	FITTING, BLKHD CONNECT	3
28	0301948	HD 7 WAY TRAILER CONNECT	1
29	0301961	BALL VALVE 2	1
30	0302056	HOSE HYD, 183"	5
31	0302205	GAUGE, FLUSH MNTG-6000 PSI	2
32	0302312	HOSE HYD, 43" LG 12G2AT	1
33	0302367	PIPE NIPPLE - 2 X 4	1
34	0302372	HOSE HYD, 240" LG	4
35	0302508	FITTING, ELL 8MJ-8MB 90LL	3
36	0302534	FITTING, 45 DEG ELBOW	2
37	0302604	HOSE HYD, 44"	2
38	0302632	HOSE HYD, 40"	8
39	0302805	HOSE HYD, 10"	1
40	0302856	KNOB-TILT, 3/8-16 THREAD	1
41	0302881	HOSE HYD, 45"	1
42	0303170	HOSE, HYD. 75"	1
43	0303340	HOSE HYD, 50" LG	1
44	0303379	KNOB, SWING CW - CCW	1
45	0303380	KNOB-UNDERLIFT (IN-OUT)	1
46	0303381	KNOB - UNDERLIFT (UP-DN)	1

ITEM	PART NUMBER	DESCRIPTION	QTY
47	0303391	HOSE 8AT2(8FJX-8FJ90) 110"	3
48	0303538	FITT, ADAPTER -BRASS 8FP-6MP	1
49	0303539	QUICK DISCONNECT 3/8 FPT	1
50	0303950	FITTING 45DEG DOT BRASS	1
51	0304363	QUICK DISCONNECT 1/2 FPT	2
52	0306537	EMERGENCY SWITCH	2
53	0306540	ROTARY SELECT SWITCH OPERATOR	12
54	0306870	HOSE HYDR - 96"	4
55	0306921	PIPE PLUG, 2" SQ HD	1
56	0307061	WINCH-35K dp 2-SP N.DRUM W/TEN	3
57	0307452	HOSE, HYD 146" LG	4
58	0307472	HOSE, HYD ASSY 24" LG	1
59	0307604	KNOB, RED LONG - SK0700-07	5
60	0310314	HOSE ASSY - 42" LG	4
61	0310456	PUSH BUTTN OPER W/MTG(RED) N/C	2
62	0310581	hose assy- 96" 8 fjx-10fjx90	4
63	0310637	PLUG, HOLE	2
64	0311191	ROLLER, POLY, 4" X 5/8"	2
65	0311305	T-BOLT CLAMP 1 3/8 TO 1 9/16	4
66	0311355	HOBBS HOURMETER	1
67	0311417	HOSE, 196" 3/8 2 X STRAIGHT	2
68	0311426	HOSE ASSY, 80" 4FJX-4FJX45	16
69	0311755	WATER SEPARATOR-MONNIER	1
70	0313129	HOSE, 1 SUCTION 16C4	34
71	0400005	SCREW, 6-32X1/2 PRH SS	6
72	0400012	LKWASHER, #8 SS	8
73	0400021	SCREW, 8-32X1/2 PRH SS	12
74	04000381	SS BHSCS 1/4-20 X 1	15
75	0400062	SCREW, 1/4-20X3/4 THC	3
76	0400066	SCREW, 1/4-20X3/4 HHC GR5	8
77	0400288	SCREW, 3/4-10X2-1/2 HHC GR8	16
78	0400307	SCREW, 7/8-9X4 HHC GR8	16
79	0400369	NUT, 1/4 SPR J	11
80	0400431	NUT, 3/4-10 LOK GR8	16
81	0400437	NUT, 7/8-9 LOK GR8	16
82	0400452	LKWASHER, 1/4	8
83	0400454	WASHER, 1/4 SS	2
84	0400473	WASHER, 7/8 PL GR8	16
85	0400489	WASHER, 3/4 SAE GR8	32
86	0400491	LKWASHER, 1/2	20
87	0400492	USS FLAT WASHER, 1/2	2
88	0400497	WASHER, 1/2 GR8	6
89	0400498	WASHER, 1/2X2X0.125	14
90	0400554	PIN, 3/8X1 SPR	3
91	0400900	NUT, 1/2-13 LOK JAM	2
92	0402020	SCREW, 1/4-20X3/4 HHC SS	2
93	0402021	SCREW, 1/4-20X1 HHC SS	13

ITEM	PART NUMBER	DESCRIPTION	QTY
94	0402044	SCREW, 3/8-16X1-1/2 HHC SS	8
95	0402080	WASHER, #8 SS	8
96	0402094	NUT, HEX 6-32 SS	6
97	0402110	WASHER, 1/4 SS	17
98	0402111	LKWASHER, 1/4 SS	30
99	0402113	NUT, 1/4-20 LOK SS	2
100	0402114	NUT, 1/4-20 LOK REV SS	11
101	0402120	WASHER, 3/8 SS	8
102	0402123	NUT, 3/8-16 LOK SS	8
103	07005922	MOUNT-HYD GAUGE	1
104	0712230	BOSS, TURNTABLE LOCK	4
105	0722104	ANGLE - WINCH MOUNTING	4
106	0724651	COVER	2
107	08005607	WINCH MOUNT, 35K FRONT	2
108	08005608	WINCH MOUNT, 35K REAR	2
109	0806994	HOUSE LOCK INDICATOR WELDMENT	4
110	0810433	HHU CHAIN ROLLER BRACKET, LH	1
111	0810434	HHU CHAIN ROLLER BRACKET, RH	1
112	09000097	ILLUMINATED LEGEND ASSY-LT UPP	1
113	09000135	ILLUMINATED LEGEND ASSY-RT UPP	1
114	09002247	CONTROL ASSY, 11 HANDLE WV	1
115	09002910	PUMP KIT, 4K KNEE BOOM	1
116	09002949	ILLUM LEGEND LT 1150 KNEE	1
117	09004266	U/L BOOM ASSEMBLY (SHORT)	1
118	09009470	SUBFRAME ASSY, 1140 RXP KB 12V	1
119	0906532	SWIVEL - BOOM ASSEMBLY	1
120	0908418	KIT-MUDFLAP CENTURY ROTATOR	1
121	0910231	BOOM ASSEMBLY 1140 (3-STAGE)	1
122	0910232	WRECKER FRAME ASSEMBLY - 1140	1
123	0910411	KIT - REAR OUTRGR 4-STG LG BOS	1
124	0910838	BUA '10 ROT AL BODY W/ XP TRI	1
125	0910935	XBAR ASY HRDWR-XHD 5X5 CENTURY	1
126	0911237	ILLUM LEGEND ASSY RH LWR WLV	1
127	0911324	RH CTL STATION ASSY 5 WINCH WV	1
128	0911804	AIR REGULATOR-GAUGE ASSEMBLY	4
129	24773017	HOSE ASSEMBLY 140"LG	2
130	24773018	HOSE ASSEMBLY 140"LG	2
131	9010520	FITTING-ELBOW 1/4T-1/4NPT	5
132	9024041	SWITCH, ROCKER SPST RED 12V21A	22
133	9041402	1/2 NC X 1 1/4 HHCS PLT GR8	6
134	9041403	1/2 NC X 1 1/2 HHCS PL GR8	14
135	9402970	TOOLBOX MTG. PAD	14
136	942480011	PLATE,SLOT-SS REAR WASHER TBOX	16
137	AWS-6821-A	HOSE ASSY-PRESSURE	10
138	FC41	FITTING-90DEG BLKHD ELB W/ NUT	8
139	HC1291	FITTING, 4MJ-4MB STR THR	16

09009128 BASIC UNIT ASSEMBLY 1140 RXP KNEEBOOM (cont'd)

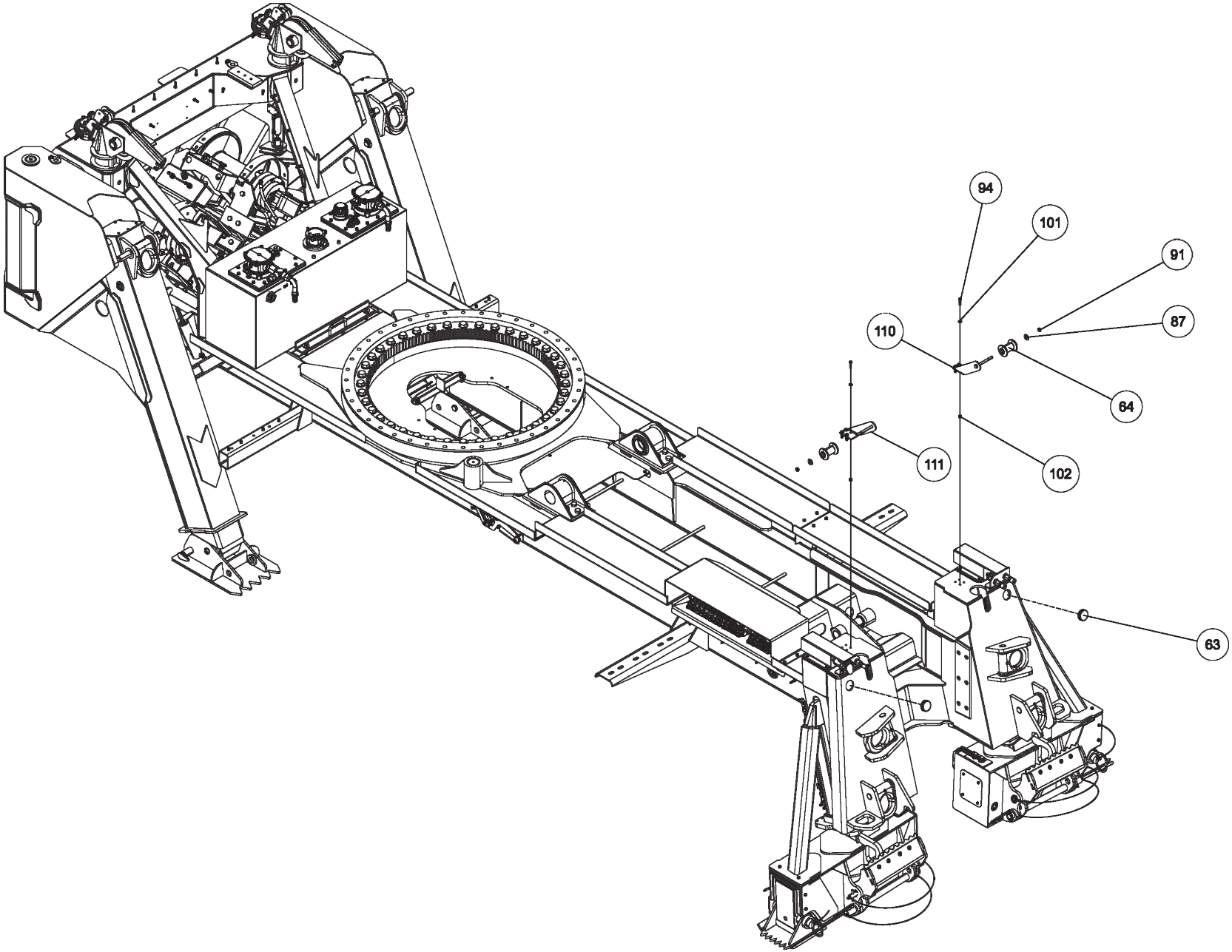

09009128 BASIC UNIT ASSEMBLY 1140 RXP KNEEBOOM (cont'd)

ITEM	PART NUMBER	DESCRIPTION	QTY
	09009128	BASIC UNIT ASSEMBLY 1140 RXP KB	
1	0300113	GREASE FITTING, 1/4-28 STR	1
2	03003419	HOSE, HYD 132" LG	1
3	03003420	HOSE, HYD 60" LG	1
4	03003421	HOSE, HYD 18"LG	3
5	03003424	HOSE, HYD 138"	1
6	03003425	HOSE, HYD 90" LG	4
7	03003426	HOSE, HYD 45" LG	6
8	0300364	CLAMP-HOSE,0.875"-2.75" 50"LBS	2
9	0300434	FITTING, HOSE BARB, 2	1
10	0300558	HOSE, SUCTION 2"ID 100R4 (C4)	1
11	0300835	KNOB-BOOM (UP-DOWN)	1
12	0300837	KNOB-BOOM (IN-OUT)	1
13	0300865	FITTING, CONNECTOR 8MJ-8MJ	5
14	0301113	HOSE HYD, 82"	2
15	0301207	HOSE HYD, 72"	4
16	0301377	FITTING, TEE,3/8" JIC	1
17	0301388	ELBOW, 8MJ-8MB90	3
18	0301422	FITTING, 6MJ-6MJ SMALL	4
19	0301473	HOSE HYD, 18" LG	2
20	0301522	ADAPTER, 6MJ-6MB	1
21	0301529	HOSE HYD, 58	2
22	03015922	STAUFF CLAMP, 3/8 TWIN	4
23	03016142	TUBE, HYD ASSY SF TO O/R	4
24	0301695	HOSE HYD, 91"	1
25	0301837	INLINE ORIFICE	4
26	0301909	RECEPTACLE BOOT	1
27	0301946	FITTING, BLKHD CONNECT	3
28	0301948	HD 7 WAY TRAILER CONNECT	1
29	0301961	BALL VALVE 2	1
30	0302056	HOSE HYD, 183"	5
31	0302205	GAUGE, FLUSH MNTG-6000 PSI	2
32	0302312	HOSE HYD, 43" LG 12G2AT	1
33	0302367	PIPE NIPPLE - 2 X 4	1
34	0302372	HOSE HYD, 240" LG	4
35	0302508	FITTING, ELL 8MJ-8MB 90LL	3
36	0302534	FITTING, 45 DEG ELBOW	2
37	0302604	HOSE HYD, 44"	2
38	0302632	HOSE HYD, 40"	8
39	0302805	HOSE HYD, 10"	1
40	0302856	KNOB-TILT, 3/8-16 THREAD	1
41	0302881	HOSE HYD, 45"	1
42	0303170	HOSE, HYD. 75"	1
43	0303340	HOSE HYD, 50" LG	1
44	0303379	KNOB, SWING CW - CCW	1
45	0303380	KNOB-UNDERLIFT (IN-OUT)	1
46	0303381	KNOB - UNDERLIFT (UP-DN)	1

ITEM	PART NUMBER	DESCRIPTION	QTY
47	0303391	HOSE 8AT2(8FJX-8FJ90) 110"	3
48	0303538	FITT, ADAPTER -BRASS 8FP-6MP	1
49	0303539	QUICK DISCONNECT 3/8 FPT	1
50	0303950	FITTING 45DEG DOT BRASS	1
51	0304363	QUICK DISCONNECT 1/2 FPT	2
52	0306537	EMERGENCY SWITCH	2
53	0306540	ROTARY SELECT SWITCH OPERATOR	12
54	0306870	HOSE HYDR - 96"	4
55	0306921	PIPE PLUG, 2" SQ HD	1
56	0307061	WINCH-35K dp 2-SP N.DRUM W/TEN	3
57	0307452	HOSE, HYD 146" LG	4
58	0307472	HOSE, HYD ASSY 24" LG	1
59	0307604	KNOB, RED LONG - SK0700-07	5
60	0310314	HOSE ASSY - 42" LG	4
61	0310456	PUSH BUTTN OPER W/MTG(RED) N/C	2
62	0310581	hose assy- 96" 8 fjx-10fjx90	4
63	0310637	PLUG, HOLE	2
64	0311191	ROLLER, POLY, 4" X 5/8"	2
65	0311305	T-BOLT CLAMP 1 3/8 TO 1 9/16	4
66	0311355	HOBBS HOURMETER	1
67	0311417	HOSE, 196" 3/8 2 X STRAIGHT	2
68	0311426	HOSE ASSY, 80" 4FJX-4FJX45	16
69	0311755	WATER SEPARATOR-MONNIER	1
70	0313129	HOSE, 1 SUCTION 16C4	34
71	0400005	SCREW, 6-32X1/2 PRH SS	6
72	0400012	LKWASHER, #8 SS	8
73	0400021	SCREW, 8-32X1/2 PRH SS	12
74	04000381	SS BHSCS 1/4-20 X 1	15
75	0400062	SCREW, 1/4-20X3/4 THC	3
76	0400066	SCREW, 1/4-20X3/4 HHC GR5	8
77	0400288	SCREW, 3/4-10X2-1/2 HHC GR8	16
78	0400307	SCREW, 7/8-9X4 HHC GR8	16
79	0400369	NUT, 1/4 SPR J	11
80	0400431	NUT, 3/4-10 LOK GR8	16
81	0400437	NUT, 7/8-9 LOK GR8	16
82	0400452	LKWASHER, 1/4	8
83	0400454	WASHER, 1/4 SS	2
84	0400473	WASHER, 7/8 PL GR8	16
85	0400489	WASHER, 3/4 SAE GR8	32
86	0400491	LKWASHER, 1/2	20
87	0400492	USS FLAT WASHER, 1/2	2
88	0400497	WASHER, 1/2 GR8	6
89	0400498	WASHER, 1/2X2X0.125	14
90	0400554	PIN, 3/8X1 SPR	3
91	0400900	NUT, 1/2-13 LOK JAM	2
92	0402020	SCREW, 1/4-20X3/4 HHC SS	2
93	0402021	SCREW, 1/4-20X1 HHC SS	13

ITEM	PART NUMBER	DESCRIPTION	QTY
94	0402044	SCREW, 3/8-16X1-1/2 HHC SS	8
95	0402080	WASHER, #8 SS	8
96	0402094	NUT, HEX 6-32 SS	6
97	0402110	WASHER, 1/4 SS	17
98	0402111	LKWASHER, 1/4 SS	30
99	0402113	NUT, 1/4-20 LOK SS	2
100	0402114	NUT, 1/4-20 LOK REV SS	11
101	0402120	WASHER, 3/8 SS	8
102	0402123	NUT, 3/8-16 LOK SS	8
103	07005922	MOUNT-HYD GAUGE	1
104	0712230	BOSS, TURNTABLE LOCK	4
105	0722104	ANGLE - WINCH MOUNTING	4
106	0724651	COVER	2
107	08005607	WINCH MOUNT, 35K FRONT	2
108	08005608	WINCH MOUNT, 35K REAR	2
109	0806994	HOUSE LOCK INDICATOR WELDMENT	4
110	0810433	HHU CHAIN ROLLER BRACKET, LH	1
111	0810434	HHU CHAIN ROLLER BRACKET, RH	1
112	09000097	ILLUMINATED LEGEND ASSY-LT UPP	1
113	09000135	ILLUMINATED LEGEND ASSY-RT UPP	1
114	09002247	CONTROL ASSY, 11 HANDLE WV	1
115	09002910	PUMP KIT, 4K KNEE BOOM	1
116	09002949	ILLUM LEGEND LT 1150 KNEE	1
117	09004266	U/L BOOM ASSEMBLY (SHORT)	1
118	09009470	SUBFRAME ASSY, 1140 RXP KB 12V	1
119	0906532	SWIVEL - BOOM ASSEMBLY	1
120	0908418	KIT-MUDFLAP CENTURY ROTATOR	1
121	0910231	BOOM ASSEMBLY 1140 (3-STAGE)	1
122	0910232	WRECKER FRAME ASSEMBLY - 1140	1
123	0910411	KIT - REAR OUTRGR 4-STG LG BOS	1
124	0910838	BUA '10 ROT AL BODY W/ XP TRI	1
125	0910935	XBAR ASY HRDWR-XHD 5X5 CENTURY	1
126	0911237	ILLUM LEGEND ASSY RH LWR WLV	1
127	0911324	RH CTL STATION ASSY 5 WINCH WV	1
128	0911804	AIR REGULATOR-GAUGE ASSEMBLY	4
129	24773017	HOSE ASSEMBLY 140"LG	2
130	24773018	HOSE ASSEMBLY 140"LG	2
131	9010520	FITTING-ELBOW 1/4T-1/4NPT	5
132	9024041	SWITCH, ROCKER SPST RED 12V21A	22
133	9041402	1/2 NC X 1 1/4 HHCS PLT GR8	6
134	9041403	1/2 NC X 1 1/2 HHCS PL GR8	14
135	9402970	TOOLBOX MTG. PAD	14
136	942480011	PLATE,SLOT-SS REAR WASHER TBOX	16
137	AWS-6821-A	HOSE ASSY-PRESSURE	10
138	FC41	FITTING-90DEG BLKHD ELB W/ NUT	8
139	HC1291	FITTING, 4MJ-4MB STR THR	16

09009128 BASIC UNIT ASSEMBLY 1140 RXP KNEEBOOM (cont'd)

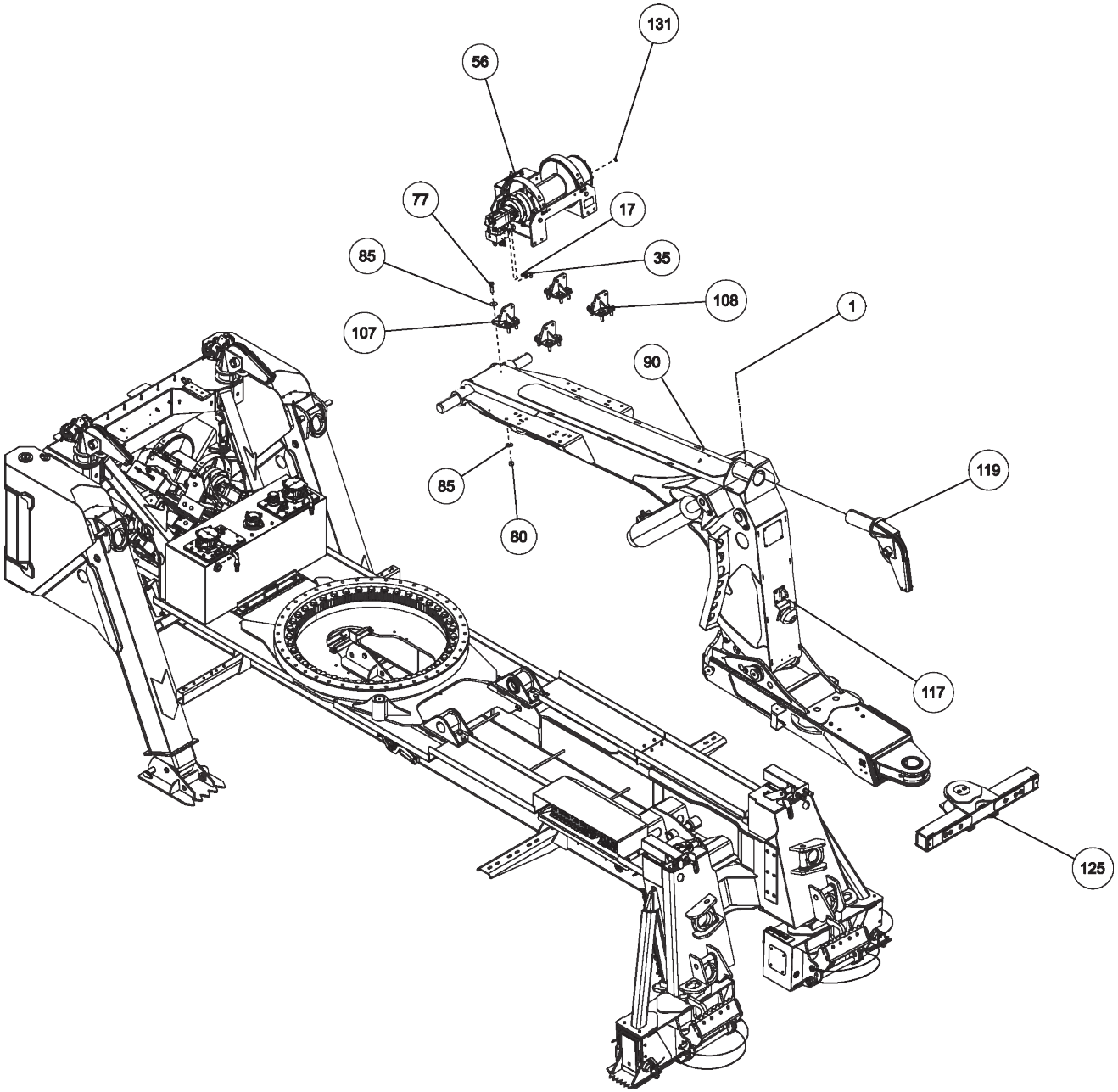

09009128 BASIC UNIT ASSEMBLY 1140 RXP KNEEBOOM (cont'd)

ITEM	PART NUMBER	DESCRIPTION	QTY
	09009128	BASIC UNIT ASSEMBLY 1140 RXP KB	
1	0300113	GREASE FITTING, 1/4-28 STR	1
2	03003419	HOSE, HYD 132" LG	1
3	03003420	HOSE, HYD 60" LG	1
4	03003421	HOSE, HYD 18"LG	3
5	03003424	HOSE, HYD 138"	1
6	03003425	HOSE, HYD 90" LG	4
7	03003426	HOSE, HYD 45" LG	6
8	0300364	CLAMP-HOSE,0.875"-2.75" 50"LBS	2
9	0300434	FITTING, HOSE BARB, 2	1
10	0300558	HOSE, SUCTION 2"ID 100R4 (C4)	1
11	0300835	KNOB-BOOM (UP-DOWN)	1
12	0300837	KNOB-BOOM (IN-OUT)	1
13	0300865	FITTING, CONNECTOR 8MJ-8MJ	5
14	0301113	HOSE HYD, 82"	2
15	0301207	HOSE HYD, 72"	4
16	0301377	FITTING, TEE,3/8" JIC	1
17	0301388	ELBOW, 8MJ-8MB90	3
18	0301422	FITTING, 6MJ-6MJ SMALL	4
19	0301473	HOSE HYD, 18" LG	2
20	0301522	ADAPTER, 6MJ-6MB	1
21	0301529	HOSE HYD, 58	2
22	03015922	STAUFF CLAMP, 3/8 TWIN	4
23	03016142	TUBE, HYD ASSY SF TO O/R	4
24	0301695	HOSE HYD, 91"	1
25	0301837	INLINE ORIFICE	4
26	0301909	RECEPTACLE BOOT	1
27	0301946	FITTING, BLKHD CONNECT	3
28	0301948	HD 7 WAY TRAILER CONNECT	1
29	0301961	BALL VALVE 2	1
30	0302056	HOSE HYD, 183"	5
31	0302205	GAUGE, FLUSH MNTG-6000 PSI	2
32	0302312	HOSE HYD, 43" LG 12G2AT	1
33	0302367	PIPE NIPPLE - 2 X 4	1
34	0302372	HOSE HYD, 240" LG	4
35	0302508	FITTING, ELL 8MJ-8MB 90LL	3
36	0302534	FITTING, 45 DEG ELBOW	2
37	0302604	HOSE HYD, 44"	2
38	0302632	HOSE HYD, 40"	8
39	0302805	HOSE HYD, 10"	1
40	0302856	KNOB-TILT, 3/8-16 THREAD	1
41	0302881	HOSE HYD, 45"	1
42	0303170	HOSE, HYD. 75"	1
43	0303340	HOSE HYD, 50" LG	1
44	0303379	KNOB, SWING CW - CCW	1
45	0303380	KNOB-UNDERLIFT (IN-OUT)	1
46	0303381	KNOB - UNDERLIFT (UP-DN)	1

ITEM	PART NUMBER	DESCRIPTION	QTY
47	0303391	HOSE 8AT2(8FJX-8FJ90) 110"	3
48	0303538	FITT, ADAPTER -BRASS 8FP-6MP	1
49	0303539	QUICK DISCONNECT 3/8 FPT	1
50	0303950	FITTING 45DEG DOT BRASS	1
51	0304363	QUICK DISCONNECT 1/2 FPT	2
52	0306537	EMERGENCY SWITCH	2
53	0306540	ROTARY SELECT SWITCH OPERATOR	12
54	0306870	HOSE HYDR - 96"	4
55	0306921	PIPE PLUG, 2" SQ HD	1
56	0307061	WINCH-35K dp 2-SP N.DRUM W/TEN	3
57	0307452	HOSE, HYD 146" LG	4
58	0307472	HOSE, HYD ASSY 24" LG	1
59	0307604	KNOB, RED LONG - SK0700-07	5
60	0310314	HOSE ASSY - 42" LG	4
61	0310456	PUSH BUTTN OPER W/MTG(RED) N/C	2
62	0310581	hose assy- 96" 8 fjx-10fjx90	4
63	0310637	PLUG, HOLE	2
64	0311191	ROLLER, POLY, 4" X 5/8"	2
65	0311305	T-BOLT CLAMP 1 3/8 TO 1 9/16	4
66	0311355	HOBBS HOURMETER	1
67	0311417	HOSE, 196" 3/8 2 X STRAIGHT	2
68	0311426	HOSE ASSY, 80" 4FJX-4FJX45	16
69	0311755	WATER SEPARATOR-MONNIER	1
70	0313129	HOSE, 1 SUCTION 16C4	34
71	0400005	SCREW, 6-32X1/2 PRH SS	6
72	0400012	LKWASHER, #8 SS	8
73	0400021	SCREW, 8-32X1/2 PRH SS	12
74	04000381	SS BHSCS 1/4-20 X 1	15
75	0400062	SCREW, 1/4-20X3/4 THC	3
76	0400066	SCREW, 1/4-20X3/4 HHC GR5	8
77	0400288	SCREW, 3/4-10X2-1/2 HHC GR8	16
78	0400307	SCREW, 7/8-9X4 HHC GR8	16
79	0400369	NUT, 1/4 SPR J	11
80	0400431	NUT, 3/4-10 LOK GR8	16
81	0400437	NUT, 7/8-9 LOK GR8	16
82	0400452	LKWASHER, 1/4	8
83	0400454	WASHER, 1/4 SS	2
84	0400473	WASHER, 7/8 PL GR8	16
85	0400489	WASHER, 3/4 SAE GR8	32
86	0400491	LKWASHER, 1/2	20
87	0400492	USS FLAT WASHER, 1/2	2
88	0400497	WASHER, 1/2 GR8	6
89	0400498	WASHER, 1/2X2X0.125	14
90	0400554	PIN, 3/8X1 SPR	3
91	0400900	NUT, 1/2-13 LOK JAM	2
92	0402020	SCREW, 1/4-20X3/4 HHC SS	2
93	0402021	SCREW, 1/4-20X1 HHC SS	13

ITEM	PART NUMBER	DESCRIPTION	QTY
94	0402044	SCREW, 3/8-16X1-1/2 HHC SS	8
95	0402080	WASHER, #8 SS	8
96	0402094	NUT, HEX 6-32 SS	6
97	0402110	WASHER, 1/4 SS	17
98	0402111	LKWASHER, 1/4 SS	30
99	0402113	NUT, 1/4-20 LOK SS	2
100	0402114	NUT, 1/4-20 LOK REV SS	11
101	0402120	WASHER, 3/8 SS	8
102	0402123	NUT, 3/8-16 LOK SS	8
103	07005922	MOUNT-HYD GAUGE	1
104	0712230	BOSS, TURNTABLE LOCK	4
105	0722104	ANGLE - WINCH MOUNTING	4
106	0724651	COVER	2
107	08005607	WINCH MOUNT, 35K FRONT	2
108	08005608	WINCH MOUNT, 35K REAR	2
109	0806994	HOUSE LOCK INDICATOR WELDMENT	4
110	0810433	HHU CHAIN ROLLER BRACKET, LH	1
111	0810434	HHU CHAIN ROLLER BRACKET, RH	1
112	09000097	ILLUMINATED LEGEND ASSY-LT UPP	1
113	09000135	ILLUMINATED LEGEND ASSY-RT UPP	1
114	09002247	CONTROL ASSY, 11 HANDLE WV	1
115	09002910	PUMP KIT, 4K KNEE BOOM	1
116	09002949	ILLUM LEGEND LT 1150 KNEE	1
117	09004266	U/L BOOM ASSEMBLY (SHORT)	1
118	09009470	SUBFRAME ASSY, 1140 RXP KB 12V	1
119	0906532	SWIVEL - BOOM ASSEMBLY	1
120	0908418	KIT-MUDFLAP CENTURY ROTATOR	1
121	0910231	BOOM ASSEMBLY 1140 (3-STAGE)	1
122	0910232	WRECKER FRAME ASSEMBLY - 1140	1
123	0910411	KIT - REAR OUTRGR 4-STG LG BOS	1
124	0910838	BUA '10 ROT AL BODY W/ XP TRI	1
125	0910935	XBAR ASY HRDWR-XHD 5X5 CENTURY	1
126	0911237	ILLUM LEGEND ASSY RH LWR WLV	1
127	0911324	RH CTL STATION ASSY 5 WINCH WV	1
128	0911804	AIR REGULATOR-GAUGE ASSEMBLY	4
129	24773017	HOSE ASSEMBLY 140"LG	2
130	24773018	HOSE ASSEMBLY 140"LG	2
131	9010520	FITTING-ELBOW 1/4T-1/4NPT	5
132	9024041	SWITCH, ROCKER SPST RED 12V21A	22
133	9041402	1/2 NC X 1 1/4 HHCS PLT GR8	6
134	9041403	1/2 NC X 1 1/2 HHCS PL GR8	14
135	9402970	TOOLBOX MTG. PAD	14
136	942480011	PLATE,SLOT-SS REAR WASHER TBOX	16
137	AWS-6821-A	HOSE ASSY-PRESSURE	10
138	FC41	FITTING-90DEG BLKHD ELB W/ NUT	8
139	HC1291	FITTING, 4MJ-4MB STR THR	16

09009128 BASIC UNIT ASSEMBLY 1140 RXP KNEEBOOM (cont'd)

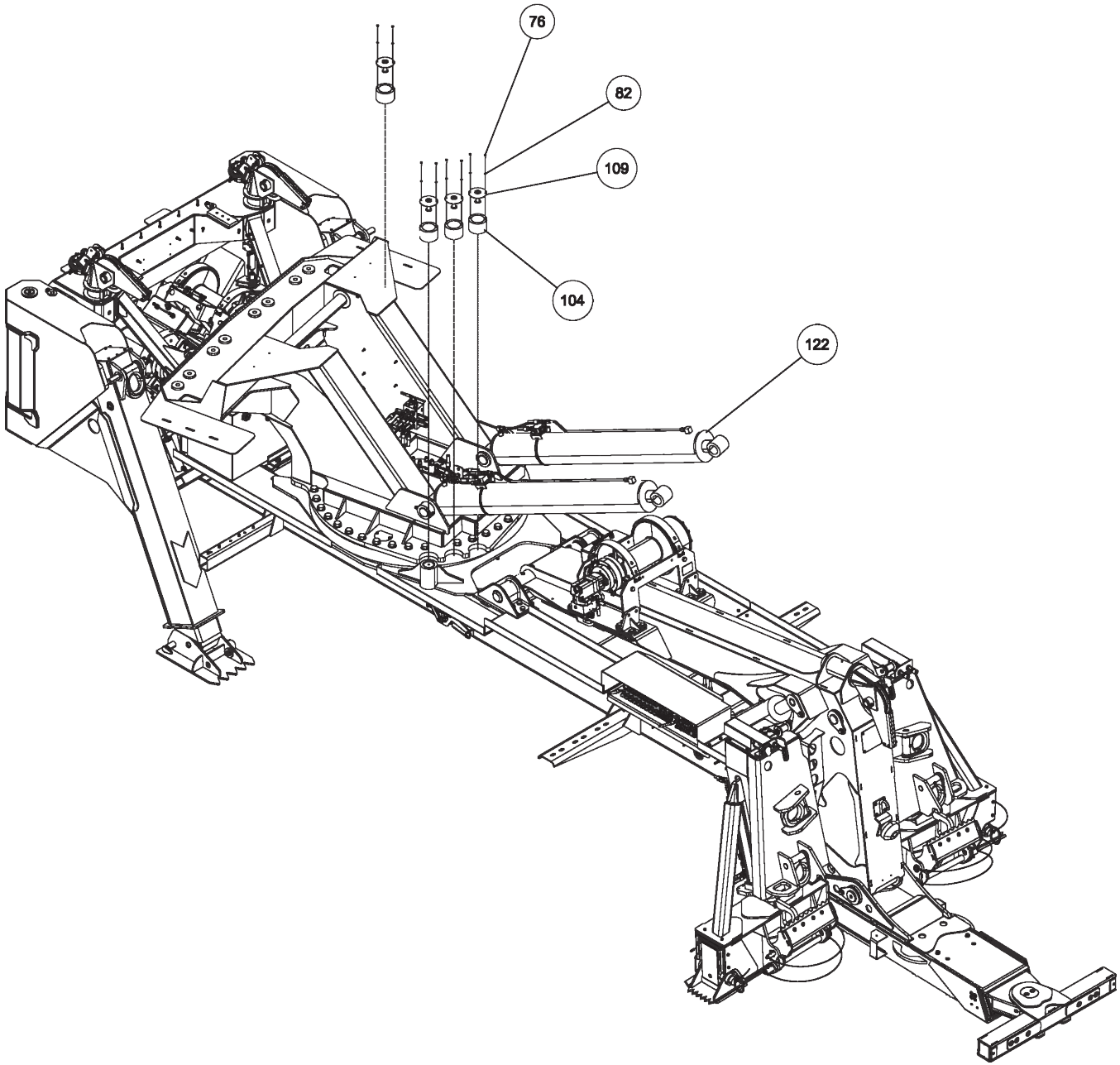

09009128 BASIC UNIT ASSEMBLY 1140 RXP KNEEBOOM (cont'd)

ITEM	PART NUMBER	DESCRIPTION	QTY
	09009128	BASIC UNIT ASSEMBLY 1140 RXP KB	
1	0300113	GREASE FITTING, 1/4-28 STR	1
2	03003419	HOSE, HYD 132" LG	1
3	03003420	HOSE, HYD 60" LG	1
4	03003421	HOSE, HYD 18"LG	3
5	03003424	HOSE, HYD 138"	1
6	03003425	HOSE, HYD 90" LG	4
7	03003426	HOSE, HYD 45" LG	6
8	0300364	CLAMP-HOSE,0.875"-2.75" 50"LBS	2
9	0300434	FITTING, HOSE BARB, 2	1
10	0300558	HOSE, SUCTION 2"ID 100R4 (C4)	1
11	0300835	KNOB-BOOM (UP-DOWN)	1
12	0300837	KNOB-BOOM (IN-OUT)	1
13	0300865	FITTING, CONNECTOR 8MJ-8MJ	5
14	0301113	HOSE HYD, 82"	2
15	0301207	HOSE HYD, 72"	4
16	0301377	FITTING, TEE,3/8" JIC	1
17	0301388	ELBOW, 8MJ-8MB90	3
18	0301422	FITTING, 6MJ-6MJ SMALL	4
19	0301473	HOSE HYD, 18" LG	2
20	0301522	ADAPTER, 6MJ-6MB	1
21	0301529	HOSE HYD, 58	2
22	03015922	STAUFF CLAMP, 3/8 TWIN	4
23	03016142	TUBE, HYD ASSY SF TO O/R	4
24	0301695	HOSE HYD, 91"	1
25	0301837	INLINE ORIFICE	4
26	0301909	RECEPTACLE BOOT	1
27	0301946	FITTING, BLKHD CONNECT	3
28	0301948	HD 7 WAY TRAILER CONNECT	1
29	0301961	BALL VALVE 2	1
30	0302056	HOSE HYD, 183"	5
31	0302205	GAUGE, FLUSH MNTG-6000 PSI	2
32	0302312	HOSE HYD, 43" LG 12G2AT	1
33	0302367	PIPE NIPPLE - 2 X 4	1
34	0302372	HOSE HYD, 240" LG	4
35	0302508	FITTING, ELL 8MJ-8MB 90LL	3
36	0302534	FITTING, 45 DEG ELBOW	2
37	0302604	HOSE HYD, 44"	2
38	0302632	HOSE HYD, 40"	8
39	0302805	HOSE HYD, 10"	1
40	0302856	KNOB-TILT, 3/8-16 THREAD	1
41	0302881	HOSE HYD, 45"	1
42	0303170	HOSE, HYD. 75"	1
43	0303340	HOSE HYD, 50" LG	1
44	0303379	KNOB, SWING CW - CCW	1
45	0303380	KNOB-UNDERLIFT (IN-OUT)	1
46	0303381	KNOB - UNDERLIFT (UP-DN)	1

ITEM	PART NUMBER	DESCRIPTION	QTY
47	0303391	HOSE 8AT2(8FJX-8FJ90) 110"	3
48	0303538	FITT, ADAPTER -BRASS 8FP-6MP	1
49	0303539	QUICK DISCONNECT 3/8 FPT	1
50	0303950	FITTING 45DEG DOT BRASS	1
51	0304363	QUICK DISCONNECT 1/2 FPT	2
52	0306537	EMERGENCY SWITCH	2
53	0306540	ROTARY SELECT SWITCH OPERATOR	12
54	0306870	HOSE HYDR - 96"	4
55	0306921	PIPE PLUG, 2" SQ HD	1
56	0307061	WINCH-35K dp 2-SP N.DRUM W/TEN	3
57	0307452	HOSE, HYD 146" LG	4
58	0307472	HOSE, HYD ASSY 24" LG	1
59	0307604	KNOB, RED LONG - SK0700-07	5
60	0310314	HOSE ASSY - 42" LG	4
61	0310456	PUSH BUTTN OPER W/MTG(RED) N/C	2
62	0310581	hose assy- 96" 8 fjx-10fjx90	4
63	0310637	PLUG, HOLE	2
64	0311191	ROLLER, POLY, 4" X 5/8"	2
65	0311305	T-BOLT CLAMP 1 3/8 TO 1 9/16	4
66	0311355	HOBBS HOURMETER	1
67	0311417	HOSE, 196" 3/8 2 X STRAIGHT	2
68	0311426	HOSE ASSY, 80" 4FJX-4FJX45	16
69	0311755	WATER SEPARATOR-MONNIER	1
70	0313129	HOSE, 1 SUCTION 16C4	34
71	0400005	SCREW, 6-32X1/2 PRH SS	6
72	0400012	LKWASHER, #8 SS	8
73	0400021	SCREW, 8-32X1/2 PRH SS	12
74	04000381	SS BHSCS 1/4-20 X 1	15
75	0400062	SCREW, 1/4-20X3/4 THC	3
76	0400066	SCREW, 1/4-20X3/4 HHC GR5	8
77	0400288	SCREW, 3/4-10X2-1/2 HHC GR8	16
78	0400307	SCREW, 7/8-9X4 HHC GR8	16
79	0400369	NUT, 1/4 SPR J	11
80	0400431	NUT, 3/4-10 LOK GR8	16
81	0400437	NUT, 7/8-9 LOK GR8	16
82	0400452	LKWASHER, 1/4	8
83	0400454	WASHER, 1/4 SS	2
84	0400473	WASHER, 7/8 PL GR8	16
85	0400489	WASHER, 3/4 SAE GR8	32
86	0400491	LKWASHER, 1/2	20
87	0400492	USS FLAT WASHER, 1/2	2
88	0400497	WASHER, 1/2 GR8	6
89	0400498	WASHER, 1/2X2X0.125	14
90	0400554	PIN, 3/8X1 SPR	3
91	0400900	NUT, 1/2-13 LOK JAM	2
92	0402020	SCREW, 1/4-20X3/4 HHC SS	2
93	0402021	SCREW, 1/4-20X1 HHC SS	13

ITEM	PART NUMBER	DESCRIPTION	QTY
94	0402044	SCREW, 3/8-16X1-1/2 HHC SS	8
95	0402080	WASHER, #8 SS	8
96	0402094	NUT, HEX 6-32 SS	6
97	0402110	WASHER, 1/4 SS	17
98	0402111	LKWASHER, 1/4 SS	30
99	0402113	NUT, 1/4-20 LOK SS	2
100	0402114	NUT, 1/4-20 LOK REV SS	11
101	0402120	WASHER, 3/8 SS	8
102	0402123	NUT, 3/8-16 LOK SS	8
103	07005922	MOUNT-HYD GAUGE	1
104	0712230	BOSS, TURNTABLE LOCK	4
105	0722104	ANGLE - WINCH MOUNTING	4
106	0724651	COVER	2
107	08005607	WINCH MOUNT, 35K FRONT	2
108	08005608	WINCH MOUNT, 35K REAR	2
109	0806994	HOUSE LOCK INDICATOR WELDMENT	4
110	0810433	HHU CHAIN ROLLER BRACKET, LH	1
111	0810434	HHU CHAIN ROLLER BRACKET, RH	1
112	09000097	ILLUMINATED LEGEND ASSY-LT UPP	1
113	09000135	ILLUMINATED LEGEND ASSY-RT UPP	1
114	09002247	CONTROL ASSY, 11 HANDLE WV	1
115	09002910	PUMP KIT, 4K KNEE BOOM	1
116	09002949	ILLUM LEGEND LT 1150 KNEE	1
117	09004266	U/L BOOM ASSEMBLY (SHORT)	1
118	09009470	SUBFRAME ASSY, 1140 RXP KB 12V	1
119	0906532	SWIVEL - BOOM ASSEMBLY	1
120	0908418	KIT-MUDFLAP CENTURY ROTATOR	1
121	0910231	BOOM ASSEMBLY 1140 (3-STAGE)	1
122	0910232	WRECKER FRAME ASSEMBLY - 1140	1
123	0910411	KIT - REAR OUTRGR 4-STG LG BOS	1
124	0910838	BUA '10 ROT AL BODY W/ XP TRI	1
125	0910935	XBAR ASY HRDWR-XHD 5X5 CENTURY	1
126	0911237	ILLUM LEGEND ASSY RH LWR WLV	1
127	0911324	RH CTL STATION ASSY 5 WINCH WV	1
128	0911804	AIR REGULATOR-GAUGE ASSEMBLY	4
129	24773017	HOSE ASSEMBLY 140"LG	2
130	24773018	HOSE ASSEMBLY 140"LG	2
131	9010520	FITTING-ELBOW 1/4T-1/4NPT	5
132	9024041	SWITCH, ROCKER SPST RED 12V21A	22
133	9041402	1/2 NC X 1 1/4 HHCS PLT GR8	6
134	9041403	1/2 NC X 1 1/2 HHCS PL GR8	14
135	9402970	TOOLBOX MTG. PAD	14
136	942480011	PLATE,SLOT-SS REAR WASHER TBOX	16
137	AWS-6821-A	HOSE ASSY-PRESSURE	10
138	FC41	FITTING-90DEG BLKHD ELB W/ NUT	8
139	HC1291	FITTING, 4MJ-4MB STR THR	16

09009128 BASIC UNIT ASSEMBLY 1140 RXP KNEEBOOM (cont'd)

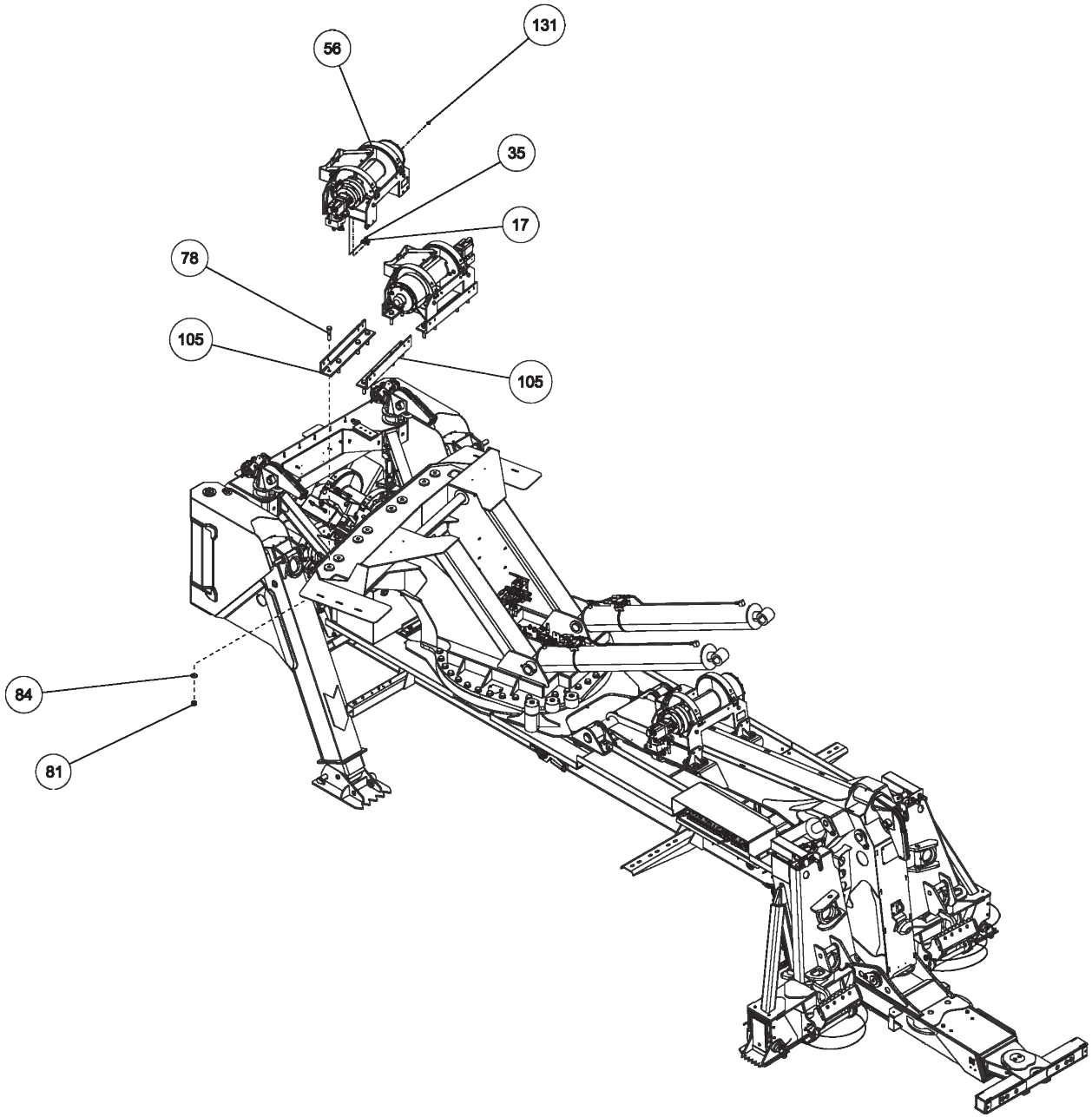

09009128 BASIC UNIT ASSEMBLY 1140 RXP KNEEBOOM (cont'd)

ITEM	PART NUMBER	DESCRIPTION	QTY
	09009128	BASIC UNIT ASSEMBLY 1140 RXP KB	
1	0300113	GREASE FITTING, 1/4-28 STR	1
2	03003419	HOSE, HYD 132" LG	1
3	03003420	HOSE, HYD 60" LG	1
4	03003421	HOSE, HYD 18"LG	3
5	03003424	HOSE, HYD 138"	1
6	03003425	HOSE, HYD 90" LG	4
7	03003426	HOSE, HYD 45" LG	6
8	0300364	CLAMP-HOSE,0.875"-2.75" 50"LBS	2
9	0300434	FITTING, HOSE BARB, 2	1
10	0300558	HOSE, SUCTION 2"ID 100R4 (C4)	1
11	0300835	KNOB-BOOM (UP-DOWN)	1
12	0300837	KNOB-BOOM (IN-OUT)	1
13	0300865	FITTING, CONNECTOR 8MJ-8MJ	5
14	0301113	HOSE HYD, 82"	2
15	0301207	HOSE HYD, 72"	4
16	0301377	FITTING, TEE,3/8" JIC	1
17	0301388	ELBOW, 8MJ-8MB90	3
18	0301422	FITTING, 6MJ-6MJ SMALL	4
19	0301473	HOSE HYD, 18" LG	2
20	0301522	ADAPTER, 6MJ-6MB	1
21	0301529	HOSE HYD, 58	2
22	03015922	STAUFF CLAMP, 3/8 TWIN	4
23	03016142	TUBE, HYD ASSY SF TO O/R	4
24	0301695	HOSE HYD, 91"	1
25	0301837	INLINE ORIFICE	4
26	0301909	RECEPTACLE BOOT	1
27	0301946	FITTING, BLKHD CONNECT	3
28	0301948	HD 7 WAY TRAILER CONNECT	1
29	0301961	BALL VALVE 2	1
30	0302056	HOSE HYD, 183"	5
31	0302205	GAUGE, FLUSH MNTG-6000 PSI	2
32	0302312	HOSE HYD, 43" LG 12G2AT	1
33	0302367	PIPE NIPPLE - 2 X 4	1
34	0302372	HOSE HYD, 240" LG	4
35	0302508	FITTING, ELL 8MJ-8MB 90LL	3
36	0302534	FITTING, 45 DEG ELBOW	2
37	0302604	HOSE HYD, 44"	2
38	0302632	HOSE HYD, 40"	8
39	0302805	HOSE HYD, 10"	1
40	0302856	KNOB-TILT, 3/8-16 THREAD	1
41	0302881	HOSE HYD, 45"	1
42	0303170	HOSE, HYD. 75"	1
43	0303340	HOSE HYD, 50" LG	1
44	0303379	KNOB, SWING CW - CCW	1
45	0303380	KNOB-UNDERLIFT (IN-OUT)	1
46	0303381	KNOB - UNDERLIFT (UP-DN)	1

ITEM	PART NUMBER	DESCRIPTION	QTY
47	0303391	HOSE 8AT2(8FJX-8FJ90) 110"	3
48	0303538	FITT, ADAPTER -BRASS 8FP-6MP	1
49	0303539	QUICK DISCONNECT 3/8 FPT	1
50	0303950	FITTING 45DEG DOT BRASS	1
51	0304363	QUICK DISCONNECT 1/2 FPT	2
52	0306537	EMERGENCY SWITCH	2
53	0306540	ROTARY SELECT SWITCH OPERATOR	12
54	0306870	HOSE HYDR - 96"	4
55	0306921	PIPE PLUG, 2" SQ HD	1
56	0307061	WINCH-35K dp 2-SP N.DRUM W/TEN	3
57	0307452	HOSE, HYD 146" LG	4
58	0307472	HOSE, HYD ASSY 24" LG	1
59	0307604	KNOB, RED LONG - SK0700-07	5
60	0310314	HOSE ASSY - 42" LG	4
61	0310456	PUSH BUTTN OPER W/MTG(RED) N/C	2
62	0310581	hose assy- 96" 8 fjx-10fjx90	4
63	0310637	PLUG, HOLE	2
64	0311191	ROLLER, POLY, 4" X 5/8"	2
65	0311305	T-BOLT CLAMP 1 3/8 TO 1 9/16	4
66	0311355	HOBBS HOURMETER	1
67	0311417	HOSE, 196" 3/8 2 X STRAIGHT	2
68	0311426	HOSE ASSY, 80" 4FJX-4FJX45	16
69	0311755	WATER SEPARATOR-MONNIER	1
70	0313129	HOSE, 1 SUCTION 16C4	34
71	0400005	SCREW, 6-32X1/2 PRH SS	6
72	0400012	LKWASHER, #8 SS	8
73	0400021	SCREW, 8-32X1/2 PRH SS	12
74	04000381	SS BHSCS 1/4-20 X 1	15
75	0400062	SCREW, 1/4-20X3/4 THC	3
76	0400066	SCREW, 1/4-20X3/4 HHC GR5	8
77	0400288	SCREW, 3/4-10X2-1/2 HHC GR8	16
78	0400307	SCREW, 7/8-9X4 HHC GR8	16
79	0400369	NUT, 1/4 SPR J	11
80	0400431	NUT, 3/4-10 LOK GR8	16
81	0400437	NUT, 7/8-9 LOK GR8	16
82	0400452	LKWASHER, 1/4	8
83	0400454	WASHER, 1/4 SS	2
84	0400473	WASHER, 7/8 PL GR8	16
85	0400489	WASHER, 3/4 SAE GR8	32
86	0400491	LKWASHER, 1/2	20
87	0400492	USS FLAT WASHER, 1/2	2
88	0400497	WASHER, 1/2 GR8	6
89	0400498	WASHER, 1/2X2X0.125	14
90	0400554	PIN, 3/8X1 SPR	3
91	0400900	NUT, 1/2-13 LOK JAM	2
92	0402020	SCREW, 1/4-20X3/4 HHC SS	2
93	0402021	SCREW, 1/4-20X1 HHC SS	13

ITEM	PART NUMBER	DESCRIPTION	QTY
94	0402044	SCREW, 3/8-16X1-1/2 HHC SS	8
95	0402080	WASHER, #8 SS	8
96	0402094	NUT, HEX 6-32 SS	6
97	0402110	WASHER, 1/4 SS	17
98	0402111	LKWASHER, 1/4 SS	30
99	0402113	NUT, 1/4-20 LOK SS	2
100	0402114	NUT, 1/4-20 LOK REV SS	11
101	0402120	WASHER, 3/8 SS	8
102	0402123	NUT, 3/8-16 LOK SS	8
103	07005922	MOUNT-HYD GAUGE	1
104	0712230	BOSS, TURNTABLE LOCK	4
105	0722104	ANGLE - WINCH MOUNTING	4
106	0724651	COVER	2
107	08005607	WINCH MOUNT, 35K FRONT	2
108	08005608	WINCH MOUNT, 35K REAR	2
109	0806994	HOUSE LOCK INDICATOR WELDMENT	4
110	0810433	HHU CHAIN ROLLER BRACKET, LH	1
111	0810434	HHU CHAIN ROLLER BRACKET, RH	1
112	09000097	ILLUMINATED LEGEND ASSY-LT UPP	1
113	09000135	ILLUMINATED LEGEND ASSY-RT UPP	1
114	09002247	CONTROL ASSY, 11 HANDLE WV	1
115	09002910	PUMP KIT, 4K KNEE BOOM	1
116	09002949	ILLUM LEGEND LT 1150 KNEE	1
117	09004266	U/L BOOM ASSEMBLY (SHORT)	1
118	09009470	SUBFRAME ASSY, 1140 RXP KB 12V	1
119	0906532	SWIVEL - BOOM ASSEMBLY	1
120	0908418	KIT-MUDFLAP CENTURY ROTATOR	1
121	0910231	BOOM ASSEMBLY 1140 (3-STAGE)	1
122	0910232	WRECKER FRAME ASSEMBLY - 1140	1
123	0910411	KIT - REAR OUTRGR 4-STG LG BOS	1
124	0910838	BUA '10 ROT AL BODY W/ XP TRI	1
125	0910935	XBAR ASY HRDWR-XHD 5X5 CENTURY	1
126	0911237	ILLUM LEGEND ASSY RH LWR WLV	1
127	0911324	RH CTL STATION ASSY 5 WINCH WV	1
128	0911804	AIR REGULATOR-GAUGE ASSEMBLY	4
129	24773017	HOSE ASSEMBLY 140"LG	2
130	24773018	HOSE ASSEMBLY 140"LG	2
131	9010520	FITTING-ELBOW 1/4T-1/4NPT	5
132	9024041	SWITCH, ROCKER SPST RED 12V21A	22
133	9041402	1/2 NC X 1 1/4 HHCS PLT GR8	6
134	9041403	1/2 NC X 1 1/2 HHCS PL GR8	14
135	9402970	TOOLBOX MTG. PAD	14
136	942480011	PLATE,SLOT-SS REAR WASHER TBOX	16
137	AWS-6821-A	HOSE ASSY-PRESSURE	10
138	FC41	FITTING-90DEG BLKHD ELB W/ NUT	8
139	HC1291	FITTING, 4MJ-4MB STR THR	16

09009128 BASIC UNIT ASSEMBLY 1140 RXP KNEEBOOM (cont'd)

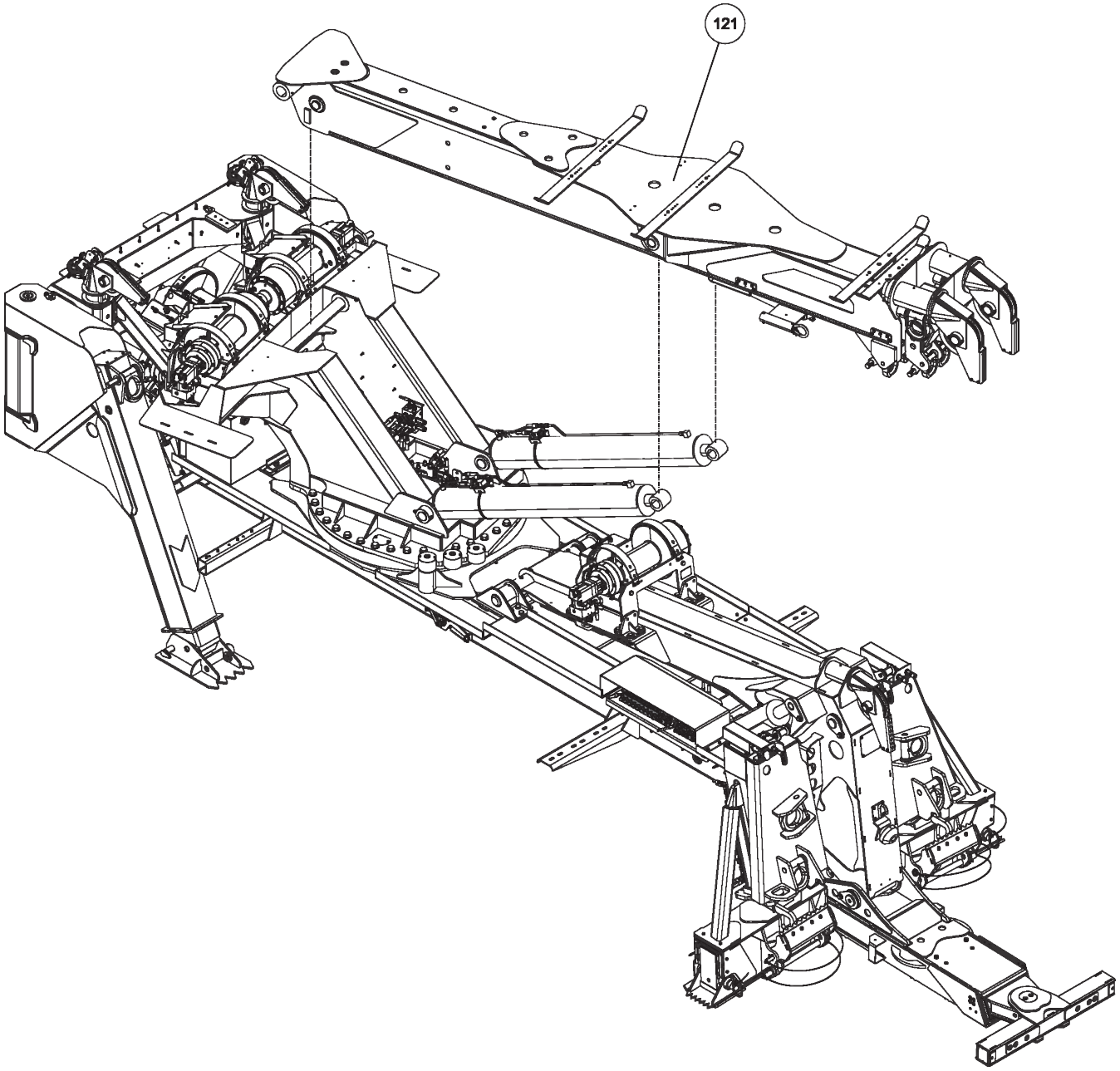

09009128 BASIC UNIT ASSEMBLY 1140 RXP KNEEBOOM (cont'd)

ITEM	PART NUMBER	DESCRIPTION	QTY
	09009128	BASIC UNIT ASSEMBLY 1140 RXP KB	
1	0300113	GREASE FITTING, 1/4-28 STR	1
2	03003419	HOSE, HYD 132" LG	1
3	03003420	HOSE, HYD 60" LG	1
4	03003421	HOSE, HYD 18"LG	3
5	03003424	HOSE, HYD 138"	1
6	03003425	HOSE, HYD 90" LG	4
7	03003426	HOSE, HYD 45" LG	6
8	0300364	CLAMP-HOSE,0.875"-2.75" 50"LBS	2
9	0300434	FITTING, HOSE BARB, 2	1
10	0300558	HOSE, SUCTION 2"ID 100R4 (C4)	1
11	0300835	KNOB-BOOM (UP-DOWN)	1
12	0300837	KNOB-BOOM (IN-OUT)	1
13	0300865	FITTING, CONNECTOR 8MJ-8MJ	5
14	0301113	HOSE HYD, 82"	2
15	0301207	HOSE HYD, 72"	4
16	0301377	FITTING, TEE,3/8" JIC	1
17	0301388	ELBOW, 8MJ-8MB90	3
18	0301422	FITTING, 6MJ-6MJ SMALL	4
19	0301473	HOSE HYD, 18" LG	2
20	0301522	ADAPTER, 6MJ-6MB	1
21	0301529	HOSE HYD, 58	2
22	03015922	STAUFF CLAMP, 3/8 TWIN	4
23	03016142	TUBE, HYD ASSY SF TO O/R	4
24	0301695	HOSE HYD, 91"	1
25	0301837	INLINE ORIFICE	4
26	0301909	RECEPTACLE BOOT	1
27	0301946	FITTING, BLKHD CONNECT	3
28	0301948	HD 7 WAY TRAILER CONNECT	1
29	0301961	BALL VALVE 2	1
30	0302056	HOSE HYD, 183"	5
31	0302205	GAUGE, FLUSH MNTG-6000 PSI	2
32	0302312	HOSE HYD, 43" LG 12G2AT	1
33	0302367	PIPE NIPPLE - 2 X 4	1
34	0302372	HOSE HYD, 240" LG	4
35	0302508	FITTING, ELL 8MJ-8MB 90LL	3
36	0302534	FITTING, 45 DEG ELBOW	2
37	0302604	HOSE HYD, 44"	2
38	0302632	HOSE HYD, 40"	8
39	0302805	HOSE HYD, 10"	1
40	0302856	KNOB-TILT, 3/8-16 THREAD	1
41	0302881	HOSE HYD, 45"	1
42	0303170	HOSE, HYD. 75"	1
43	0303340	HOSE HYD, 50" LG	1
44	0303379	KNOB, SWING CW - CCW	1
45	0303380	KNOB-UNDERLIFT (IN-OUT)	1
46	0303381	KNOB - UNDERLIFT (UP-DN)	1

ITEM	PART NUMBER	DESCRIPTION	QTY
47	0303391	HOSE 8AT2(8FJX-8FJ90) 110"	3
48	0303538	FITT, ADAPTER -BRASS 8FP-6MP	1
49	0303539	QUICK DISCONNECT 3/8 FPT	1
50	0303950	FITTING 45DEG DOT BRASS	1
51	0304363	QUICK DISCONNECT 1/2 FPT	2
52	0306537	EMERGENCY SWITCH	2
53	0306540	ROTARY SELECT SWITCH OPERATOR	12
54	0306870	HOSE HYDR - 96"	4
55	0306921	PIPE PLUG, 2" SQ HD	1
56	0307061	WINCH-35K dp 2-SP N.DRUM W/TEN	3
57	0307452	HOSE, HYD 146" LG	4
58	0307472	HOSE, HYD ASSY 24" LG	1
59	0307604	KNOB, RED LONG - SK0700-07	5
60	0310314	HOSE ASSY - 42" LG	4
61	0310456	PUSH BUTTN OPER W/MTG(RED) N/C	2
62	0310581	hose assy- 96" 8 fjx-10fjx90	4
63	0310637	PLUG, HOLE	2
64	0311191	ROLLER, POLY, 4" X 5/8"	2
65	0311305	T-BOLT CLAMP 1 3/8 TO 1 9/16	4
66	0311355	HOBBS HOURMETER	1
67	0311417	HOSE, 196" 3/8 2 X STRAIGHT	2
68	0311426	HOSE ASSY, 80" 4FJX-4FJX45	16
69	0311755	WATER SEPARATOR-MONNIER	1
70	0313129	HOSE, 1 SUCTION 16C4	34
71	0400005	SCREW, 6-32X1/2 PRH SS	6
72	0400012	LKWASHER, #8 SS	8
73	0400021	SCREW, 8-32X1/2 PRH SS	12
74	04000381	SS BHSCS 1/4-20 X 1	15
75	0400062	SCREW, 1/4-20X3/4 THC	3
76	0400066	SCREW, 1/4-20X3/4 HHC GR5	8
77	0400288	SCREW, 3/4-10X2-1/2 HHC GR8	16
78	0400307	SCREW, 7/8-9X4 HHC GR8	16
79	0400369	NUT, 1/4 SPR J	11
80	0400431	NUT, 3/4-10 LOK GR8	16
81	0400437	NUT, 7/8-9 LOK GR8	16
82	0400452	LKWASHER, 1/4	8
83	0400454	WASHER, 1/4 SS	2
84	0400473	WASHER, 7/8 PL GR8	16
85	0400489	WASHER, 3/4 SAE GR8	32
86	0400491	LKWASHER, 1/2	20
87	0400492	USS FLAT WASHER, 1/2	2
88	0400497	WASHER, 1/2 GR8	6
89	0400498	WASHER, 1/2X2X0.125	14
90	0400554	PIN, 3/8X1 SPR	3
91	0400900	NUT, 1/2-13 LOK JAM	2
92	0402020	SCREW, 1/4-20X3/4 HHC SS	2
93	0402021	SCREW, 1/4-20X1 HHC SS	13

ITEM	PART NUMBER	DESCRIPTION	QTY
94	0402044	SCREW, 3/8-16X1-1/2 HHC SS	8
95	0402080	WASHER, #8 SS	8
96	0402094	NUT, HEX 6-32 SS	6
97	0402110	WASHER, 1/4 SS	17
98	0402111	LKWASHER, 1/4 SS	30
99	0402113	NUT, 1/4-20 LOK SS	2
100	0402114	NUT, 1/4-20 LOK REV SS	11
101	0402120	WASHER, 3/8 SS	8
102	0402123	NUT, 3/8-16 LOK SS	8
103	07005922	MOUNT-HYD GAUGE	1
104	0712230	BOSS, TURNTABLE LOCK	4
105	0722104	ANGLE - WINCH MOUNTING	4
106	0724651	COVER	2
107	08005607	WINCH MOUNT, 35K FRONT	2
108	08005608	WINCH MOUNT, 35K REAR	2
109	0806994	HOUSE LOCK INDICATOR WELDMENT	4
110	0810433	HHU CHAIN ROLLER BRACKET, LH	1
111	0810434	HHU CHAIN ROLLER BRACKET, RH	1
112	09000097	ILLUMINATED LEGEND ASSY-LT UPP	1
113	09000135	ILLUMINATED LEGEND ASSY-RT UPP	1
114	09002247	CONTROL ASSY, 11 HANDLE WV	1
115	09002910	PUMP KIT, 4K KNEE BOOM	1
116	09002949	ILLUM LEGEND LT 1150 KNEE	1
117	09004266	U/L BOOM ASSEMBLY (SHORT)	1
118	09009470	SUBFRAME ASSY, 1140 RXP KB 12V	1
119	0906532	SWIVEL - BOOM ASSEMBLY	1
120	0908418	KIT-MUDFLAP CENTURY ROTATOR	1
121	0910231	BOOM ASSEMBLY 1140 (3-STAGE)	1
122	0910232	WRECKER FRAME ASSEMBLY - 1140	1
123	0910411	KIT - REAR OUTRGR 4-STG LG BOS	1
124	0910838	BUA '10 ROT AL BODY W/ XP TRI	1
125	0910935	XBAR ASY HRDWR-XHD 5X5 CENTURY	1
126	0911237	ILLUM LEGEND ASSY RH LWR WLV	1
127	0911324	RH CTL STATION ASSY 5 WINCH WV	1
128	0911804	AIR REGULATOR-GAUGE ASSEMBLY	4
129	24773017	HOSE ASSEMBLY 140"LG	2
130	24773018	HOSE ASSEMBLY 140"LG	2
131	9010520	FITTING-ELBOW 1/4T-1/4NPT	5
132	9024041	SWITCH, ROCKER SPST RED 12V21A	22
133	9041402	1/2 NC X 1 1/4 HHCS PLT GR8	6
134	9041403	1/2 NC X 1 1/2 HHCS PL GR8	14
135	9402970	TOOLBOX MTG. PAD	14
136	942480011	PLATE,SLOT-SS REAR WASHER TBOX	16
137	AWS-6821-A	HOSE ASSY-PRESSURE	10
138	FC41	FITTING-90DEG BLKHD ELB W/ NUT	8
139	HC1291	FITTING, 4MJ-4MB STR THR	16

09009128 BASIC UNIT ASSEMBLY 1140 RXP KNEEBOOM (cont'd)

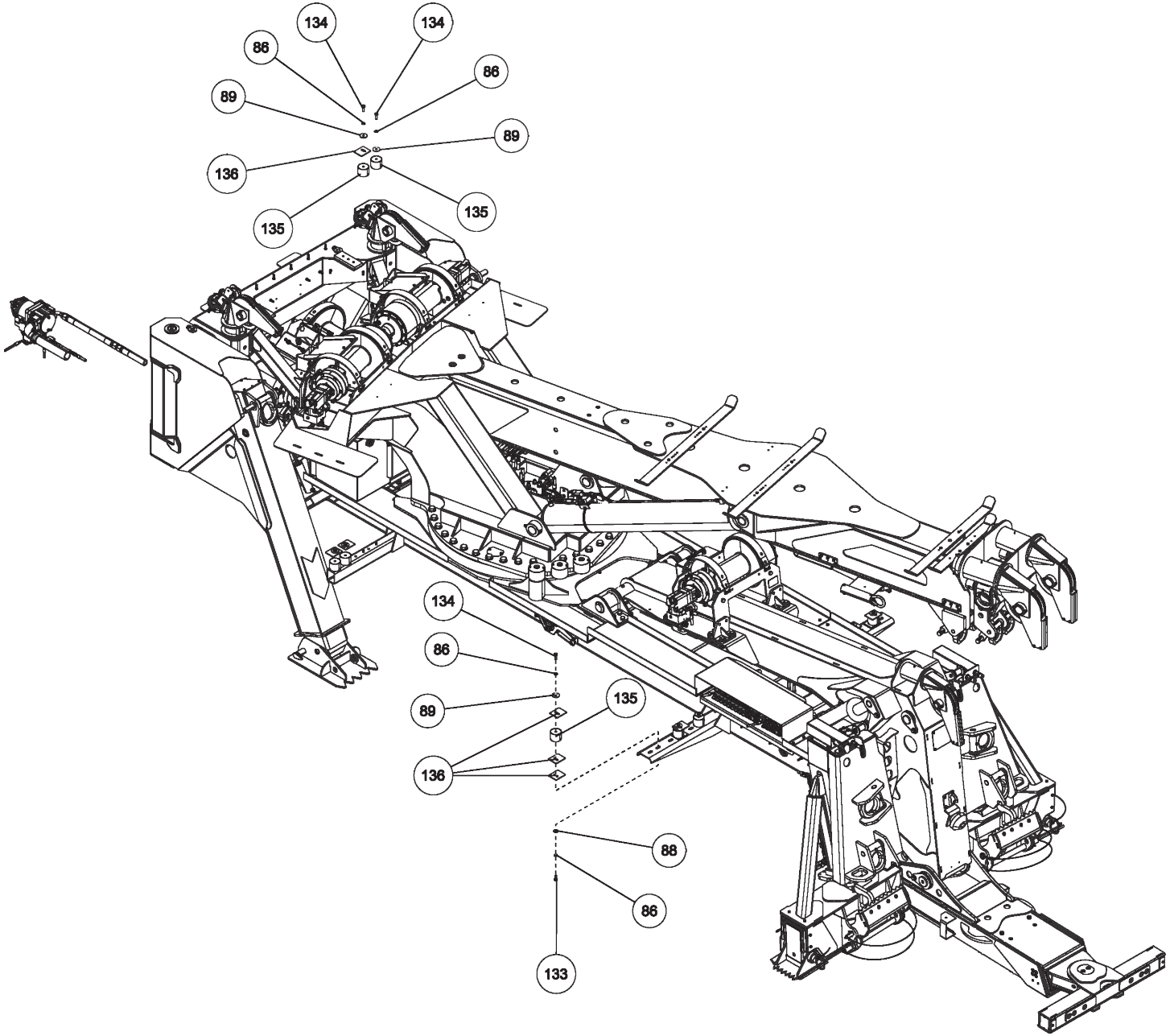

09009128 BASIC UNIT ASSEMBLY 1140 RXP KNEEBOOM (cont'd)

ITEM	PART NUMBER	DESCRIPTION	QTY
	09009128	BASIC UNIT ASSEMBLY 1140 RXP KB	
1	0300113	GREASE FITTING, 1/4-28 STR	1
2	03003419	HOSE, HYD 132" LG	1
3	03003420	HOSE, HYD 60" LG	1
4	03003421	HOSE, HYD 18"LG	3
5	03003424	HOSE, HYD 138"	1
6	03003425	HOSE, HYD 90" LG	4
7	03003426	HOSE, HYD 45" LG	6
8	0300364	CLAMP-HOSE,0.875"-2.75" 50"LBS	2
9	0300434	FITTING, HOSE BARB, 2	1
10	0300558	HOSE, SUCTION 2"ID 100R4 (C4)	1
11	0300835	KNOB-BOOM (UP-DOWN)	1
12	0300837	KNOB-BOOM (IN-OUT)	1
13	0300865	FITTING, CONNECTOR 8MJ-8MJ	5
14	0301113	HOSE HYD, 82"	2
15	0301207	HOSE HYD, 72"	4
16	0301377	FITTING, TEE,3/8" JIC	1
17	0301388	ELBOW, 8MJ-8MB90	3
18	0301422	FITTING, 6MJ-6MJ SMALL	4
19	0301473	HOSE HYD, 18" LG	2
20	0301522	ADAPTER, 6MJ-6MB	1
21	0301529	HOSE HYD, 58	2
22	03015922	STAUFF CLAMP, 3/8 TWIN	4
23	03016142	TUBE, HYD ASSY SF TO O/R	4
24	0301695	HOSE HYD, 91"	1
25	0301837	INLINE ORIFICE	4
26	0301909	RECEPTACLE BOOT	1
27	0301946	FITTING, BLKHD CONNECT	3
28	0301948	HD 7 WAY TRAILER CONNECT	1
29	0301961	BALL VALVE 2	1
30	0302056	HOSE HYD, 183"	5
31	0302205	GAUGE, FLUSH MNTG-6000 PSI	2
32	0302312	HOSE HYD, 43" LG 12G2AT	1
33	0302367	PIPE NIPPLE - 2 X 4	1
34	0302372	HOSE HYD, 240" LG	4
35	0302508	FITTING, ELL 8MJ-8MB 90LL	3
36	0302534	FITTING, 45 DEG ELBOW	2
37	0302604	HOSE HYD, 44"	2
38	0302632	HOSE HYD, 40"	8
39	0302805	HOSE HYD, 10"	1
40	0302856	KNOB-TILT, 3/8-16 THREAD	1
41	0302881	HOSE HYD, 45"	1
42	0303170	HOSE, HYD. 75"	1
43	0303340	HOSE HYD, 50" LG	1
44	0303379	KNOB, SWING CW - CCW	1
45	0303380	KNOB-UNDERLIFT (IN-OUT)	1
46	0303381	KNOB - UNDERLIFT (UP-DN)	1

ITEM	PART NUMBER	DESCRIPTION	QTY
47	0303391	HOSE 8AT2(8FJX-8FJ90) 110"	3
48	0303538	FITT, ADAPTER -BRASS 8FP-6MP	1
49	0303539	QUICK DISCONNECT 3/8 FPT	1
50	0303950	FITTING 45DEG DOT BRASS	1
51	0304363	QUICK DISCONNECT 1/2 FPT	2
52	0306537	EMERGENCY SWITCH	2
53	0306540	ROTARY SELECT SWITCH OPERATOR	12
54	0306870	HOSE HYDR - 96"	4
55	0306921	PIPE PLUG, 2" SQ HD	1
56	0307061	WINCH-35K dp 2-SP N.DRUM W/TEN	3
57	0307452	HOSE, HYD 146" LG	4
58	0307472	HOSE, HYD ASSY 24" LG	1
59	0307604	KNOB, RED LONG - SK0700-07	5
60	0310314	HOSE ASSY - 42" LG	4
61	0310456	PUSH BUTTN OPER W/MTG(RED) N/C	2
62	0310581	hose assy- 96" 8 fjx-10fjx90	4
63	0310637	PLUG, HOLE	2
64	0311191	ROLLER, POLY, 4" X 5/8"	2
65	0311305	T-BOLT CLAMP 1 3/8 TO 1 9/16	4
66	0311355	HOBBS HOURMETER	1
67	0311417	HOSE, 196" 3/8 2 X STRAIGHT	2
68	0311426	HOSE ASSY, 80" 4FJX-4FJX45	16
69	0311755	WATER SEPARATOR-MONNIER	1
70	0313129	HOSE, 1 SUCTION 16C4	34
71	0400005	SCREW, 6-32X1/2 PRH SS	6
72	0400012	LKWASHER, #8 SS	8
73	0400021	SCREW, 8-32X1/2 PRH SS	12
74	04000381	SS BHSCS 1/4-20 X 1	15
75	0400062	SCREW, 1/4-20X3/4 THC	3
76	0400066	SCREW, 1/4-20X3/4 HHC GR5	8
77	0400288	SCREW, 3/4-10X2-1/2 HHC GR8	16
78	0400307	SCREW, 7/8-9X4 HHC GR8	16
79	0400369	NUT, 1/4 SPR J	11
80	0400431	NUT, 3/4-10 LOK GR8	16
81	0400437	NUT, 7/8-9 LOK GR8	16
82	0400452	LKWASHER, 1/4	8
83	0400454	WASHER, 1/4 SS	2
84	0400473	WASHER, 7/8 PL GR8	16
85	0400489	WASHER, 3/4 SAE GR8	32
86	0400491	LKWASHER, 1/2	20
87	0400492	USS FLAT WASHER, 1/2	2
88	0400497	WASHER, 1/2 GR8	6
89	0400498	WASHER, 1/2X2X0.125	14
90	0400554	PIN, 3/8X1 SPR	3
91	0400900	NUT, 1/2-13 LOK JAM	2
92	0402020	SCREW, 1/4-20X3/4 HHC SS	2
93	0402021	SCREW, 1/4-20X1 HHC SS	13

ITEM	PART NUMBER	DESCRIPTION	QTY
94	0402044	SCREW, 3/8-16X1-1/2 HHC SS	8
95	0402080	WASHER, #8 SS	8
96	0402094	NUT, HEX 6-32 SS	6
97	0402110	WASHER, 1/4 SS	17
98	0402111	LKWASHER, 1/4 SS	30
99	0402113	NUT, 1/4-20 LOK SS	2
100	0402114	NUT, 1/4-20 LOK REV SS	11
101	0402120	WASHER, 3/8 SS	8
102	0402123	NUT, 3/8-16 LOK SS	8
103	07005922	MOUNT-HYD GAUGE	1
104	0712230	BOSS, TURNTABLE LOCK	4
105	0722104	ANGLE - WINCH MOUNTING	4
106	0724651	COVER	2
107	08005607	WINCH MOUNT, 35K FRONT	2
108	08005608	WINCH MOUNT, 35K REAR	2
109	0806994	HOUSE LOCK INDICATOR WELDMENT	4
110	0810433	HHU CHAIN ROLLER BRACKET, LH	1
111	0810434	HHU CHAIN ROLLER BRACKET, RH	1
112	09000097	ILLUMINATED LEGEND ASSY-LT UPP	1
113	09000135	ILLUMINATED LEGEND ASSY-RT UPP	1
114	09002247	CONTROL ASSY, 11 HANDLE WV	1
115	09002910	PUMP KIT, 4K KNEE BOOM	1
116	09002949	ILLUM LEGEND LT 1150 KNEE	1
117	09004266	U/L BOOM ASSEMBLY (SHORT)	1
118	09009470	SUBFRAME ASSY, 1140 RXP KB 12V	1
119	0906532	SWIVEL - BOOM ASSEMBLY	1
120	0908418	KIT-MUDFLAP CENTURY ROTATOR	1
121	0910231	BOOM ASSEMBLY 1140 (3-STAGE)	1
122	0910232	WRECKER FRAME ASSEMBLY - 1140	1
123	0910411	KIT - REAR OUTRGR 4-STG LG BOS	1
124	0910838	BUA '10 ROT AL BODY W/ XP TRI	1
125	0910935	XBAR ASY HRDWR-XHD 5X5 CENTURY	1
126	0911237	ILLUM LEGEND ASSY RH LWR WLV	1
127	0911324	RH CTL STATION ASSY 5 WINCH WV	1
128	0911804	AIR REGULATOR-GAUGE ASSEMBLY	4
129	24773017	HOSE ASSEMBLY 140"LG	2
130	24773018	HOSE ASSEMBLY 140"LG	2
131	9010520	FITTING-ELBOW 1/4T-1/4NPT	5
132	9024041	SWITCH, ROCKER SPST RED 12V21A	22
133	9041402	1/2 NC X 1 1/4 HHCS PLT GR8	6
134	9041403	1/2 NC X 1 1/2 HHCS PL GR8	14
135	9402970	TOOLBOX MTG. PAD	14
136	942480011	PLATE,SLOT-SS REAR WASHER TBOX	16
137	AWS-6821-A	HOSE ASSY-PRESSURE	10
138	FC41	FITTING-90DEG BLKHD ELB W/ NUT	8
139	HC1291	FITTING, 4MJ-4MB STR THR	16

09009128 BASIC UNIT ASSEMBLY 1140 RXP KNEEBOOM (cont'd)

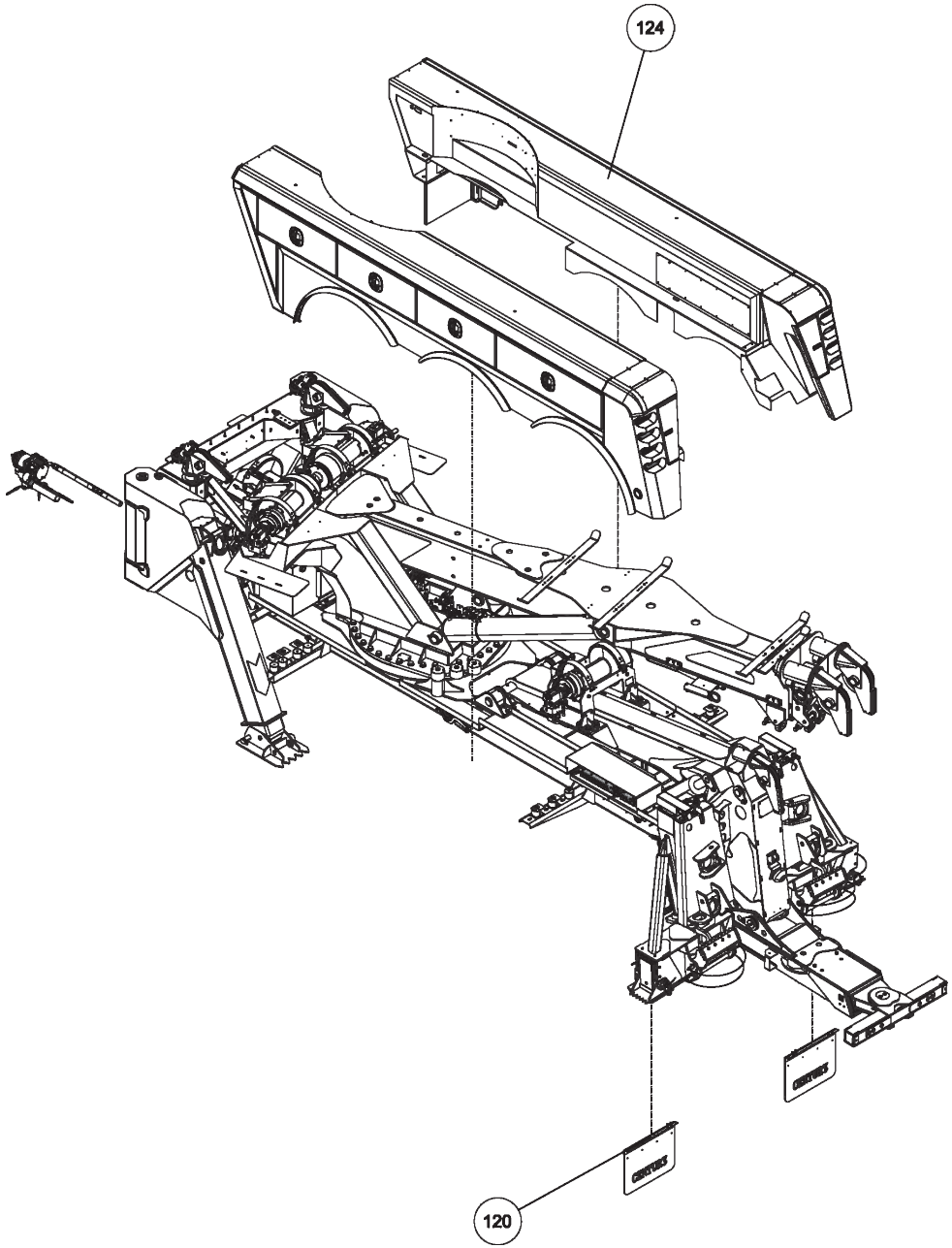

09009128 BASIC UNIT ASSEMBLY 1140 RXP KNEEBOOM (cont'd)

ITEM	PART NUMBER	DESCRIPTION	QTY
	09009128	BASIC UNIT ASSEMBLY 1140 RXP KB	
1	0300113	GREASE FITTING, 1/4-28 STR	1
2	03003419	HOSE, HYD 132" LG	1
3	03003420	HOSE, HYD 60" LG	1
4	03003421	HOSE, HYD 18"LG	3
5	03003424	HOSE, HYD 138"	1
6	03003425	HOSE, HYD 90" LG	4
7	03003426	HOSE, HYD 45" LG	6
8	0300364	CLAMP-HOSE,0.875"-2.75" 50"LBS	2
9	0300434	FITTING, HOSE BARB, 2	1
10	0300558	HOSE, SUCTION 2"ID 100R4 (C4)	1
11	0300835	KNOB-BOOM (UP-DOWN)	1
12	0300837	KNOB-BOOM (IN-OUT)	1
13	0300865	FITTING, CONNECTOR 8MJ-8MJ	5
14	0301113	HOSE HYD, 82"	2
15	0301207	HOSE HYD, 72"	4
16	0301377	FITTING, TEE,3/8" JIC	1
17	0301388	ELBOW, 8MJ-8MB90	3
18	0301422	FITTING, 6MJ-6MJ SMALL	4
19	0301473	HOSE HYD, 18" LG	2
20	0301522	ADAPTER, 6MJ-6MB	1
21	0301529	HOSE HYD, 58	2
22	03015922	STAUFF CLAMP, 3/8 TWIN	4
23	03016142	TUBE, HYD ASSY SF TO O/R	4
24	0301695	HOSE HYD, 91"	1
25	0301837	INLINE ORIFICE	4
26	0301909	RECEPTACLE BOOT	1
27	0301946	FITTING, BLKHD CONNECT	3
28	0301948	HD 7 WAY TRAILER CONNECT	1
29	0301961	BALL VALVE 2	1
30	0302056	HOSE HYD, 183"	5
31	0302205	GAUGE, FLUSH MNTG-6000 PSI	2
32	0302312	HOSE HYD, 43" LG 12G2AT	1
33	0302367	PIPE NIPPLE - 2 X 4	1
34	0302372	HOSE HYD, 240" LG	4
35	0302508	FITTING, ELL 8MJ-8MB 90LL	3
36	0302534	FITTING, 45 DEG ELBOW	2
37	0302604	HOSE HYD, 44"	2
38	0302632	HOSE HYD, 40"	8
39	0302805	HOSE HYD, 10"	1
40	0302856	KNOB-TILT, 3/8-16 THREAD	1
41	0302881	HOSE HYD, 45"	1
42	0303170	HOSE, HYD. 75"	1
43	0303340	HOSE HYD, 50" LG	1
44	0303379	KNOB, SWING CW - CCW	1
45	0303380	KNOB-UNDERLIFT (IN-OUT)	1
46	0303381	KNOB - UNDERLIFT (UP-DN)	1

ITEM	PART NUMBER	DESCRIPTION	QTY
47	0303391	HOSE 8AT2(8FJX-8FJ90) 110"	3
48	0303538	FITT, ADAPTER -BRASS 8FP-6MP	1
49	0303539	QUICK DISCONNECT 3/8 FPT	1
50	0303950	FITTING 45DEG DOT BRASS	1
51	0304363	QUICK DISCONNECT 1/2 FPT	2
52	0306537	EMERGENCY SWITCH	2
53	0306540	ROTARY SELECT SWITCH OPERATOR	12
54	0306870	HOSE HYDR - 96"	4
55	0306921	PIPE PLUG, 2" SQ HD	1
56	0307061	WINCH-35K dp 2-SP N.DRUM W/TEN	3
57	0307452	HOSE, HYD 146" LG	4
58	0307472	HOSE, HYD ASSY 24" LG	1
59	0307604	KNOB, RED LONG - SK0700-07	5
60	0310314	HOSE ASSY - 42" LG	4
61	0310456	PUSH BUTTN OPER W/MTG(RED) N/C	2
62	0310581	hose assy- 96" 8 fjx-10fjx90	4
63	0310637	PLUG, HOLE	2
64	0311191	ROLLER, POLY, 4" X 5/8"	2
65	0311305	T-BOLT CLAMP 1 3/8 TO 1 9/16	4
66	0311355	HOBBS HOURMETER	1
67	0311417	HOSE, 196" 3/8 2 X STRAIGHT	2
68	0311426	HOSE ASSY, 80" 4FJX-4FJX45	16
69	0311755	WATER SEPARATOR-MONNIER	1
70	0313129	HOSE, 1 SUCTION 16C4	34
71	0400005	SCREW, 6-32X1/2 PRH SS	6
72	0400012	LKWASHER, #8 SS	8
73	0400021	SCREW, 8-32X1/2 PRH SS	12
74	04000381	SS BHSCS 1/4-20 X 1	15
75	0400062	SCREW, 1/4-20X3/4 THC	3
76	0400066	SCREW, 1/4-20X3/4 HHC GR5	8
77	0400288	SCREW, 3/4-10X2-1/2 HHC GR8	16
78	0400307	SCREW, 7/8-9X4 HHC GR8	16
79	0400369	NUT, 1/4 SPR J	11
80	0400431	NUT, 3/4-10 LOK GR8	16
81	0400437	NUT, 7/8-9 LOK GR8	16
82	0400452	LKWASHER, 1/4	8
83	0400454	WASHER, 1/4 SS	2
84	0400473	WASHER, 7/8 PL GR8	16
85	0400489	WASHER, 3/4 SAE GR8	32
86	0400491	LKWASHER, 1/2	20
87	0400492	USS FLAT WASHER, 1/2	2
88	0400497	WASHER, 1/2 GR8	6
89	0400498	WASHER, 1/2X2X0.125	14
90	0400554	PIN, 3/8X1 SPR	3
91	0400900	NUT, 1/2-13 LOK JAM	2
92	0402020	SCREW, 1/4-20X3/4 HHC SS	2
93	0402021	SCREW, 1/4-20X1 HHC SS	13

ITEM	PART NUMBER	DESCRIPTION	QTY
94	0402044	SCREW, 3/8-16X1-1/2 HHC SS	8
95	0402080	WASHER, #8 SS	8
96	0402094	NUT, HEX 6-32 SS	6
97	0402110	WASHER, 1/4 SS	17
98	0402111	LKWASHER, 1/4 SS	30
99	0402113	NUT, 1/4-20 LOK SS	2
100	0402114	NUT, 1/4-20 LOK REV SS	11
101	0402120	WASHER, 3/8 SS	8
102	0402123	NUT, 3/8-16 LOK SS	8
103	07005922	MOUNT-HYD GAUGE	1
104	0712230	BOSS, TURNTABLE LOCK	4
105	0722104	ANGLE - WINCH MOUNTING	4
106	0724651	COVER	2
107	08005607	WINCH MOUNT, 35K FRONT	2
108	08005608	WINCH MOUNT, 35K REAR	2
109	0806994	HOUSE LOCK INDICATOR WELDMENT	4
110	0810433	HHU CHAIN ROLLER BRACKET, LH	1
111	0810434	HHU CHAIN ROLLER BRACKET, RH	1
112	09000097	ILLUMINATED LEGEND ASSY-LT UPP	1
113	09000135	ILLUMINATED LEGEND ASSY-RT UPP	1
114	09002247	CONTROL ASSY, 11 HANDLE WV	1
115	09002910	PUMP KIT, 4K KNEE BOOM	1
116	09002949	ILLUM LEGEND LT 1150 KNEE	1
117	09004266	U/L BOOM ASSEMBLY (SHORT)	1
118	09009470	SUBFRAME ASSY, 1140 RXP KB 12V	1
119	0906532	SWIVEL - BOOM ASSEMBLY	1
120	0908418	KIT-MUDFLAP CENTURY ROTATOR	1
121	0910231	BOOM ASSEMBLY 1140 (3-STAGE)	1
122	0910232	WRECKER FRAME ASSEMBLY - 1140	1
123	0910411	KIT - REAR OUTRGR 4-STG LG BOS	1
124	0910838	BUA '10 ROT AL BODY W/ XP TRI	1
125	0910935	XBAR ASY HRDWR-XHD 5X5 CENTURY	1
126	0911237	ILLUM LEGEND ASSY RH LWR WLV	1
127	0911324	RH CTL STATION ASSY 5 WINCH WV	1
128	0911804	AIR REGULATOR-GAUGE ASSEMBLY	4
129	24773017	HOSE ASSEMBLY 140"LG	2
130	24773018	HOSE ASSEMBLY 140"LG	2
131	9010520	FITTING-ELBOW 1/4T-1/4NPT	5
132	9024041	SWITCH, ROCKER SPST RED 12V21A	22
133	9041402	1/2 NC X 1 1/4 HHCS PLT GR8	6
134	9041403	1/2 NC X 1 1/2 HHCS PL GR8	14
135	9402970	TOOLBOX MTG. PAD	14
136	942480011	PLATE,SLOT-SS REAR WASHER TBOX	16
137	AWS-6821-A	HOSE ASSY-PRESSURE	10
138	FC41	FITTING-90DEG BLKHD ELB W/ NUT	8
139	HC1291	FITTING, 4MJ-4MB STR THR	16

09009128 BASIC UNIT ASSEMBLY 1140 RXP KNEEBOOM (cont'd)

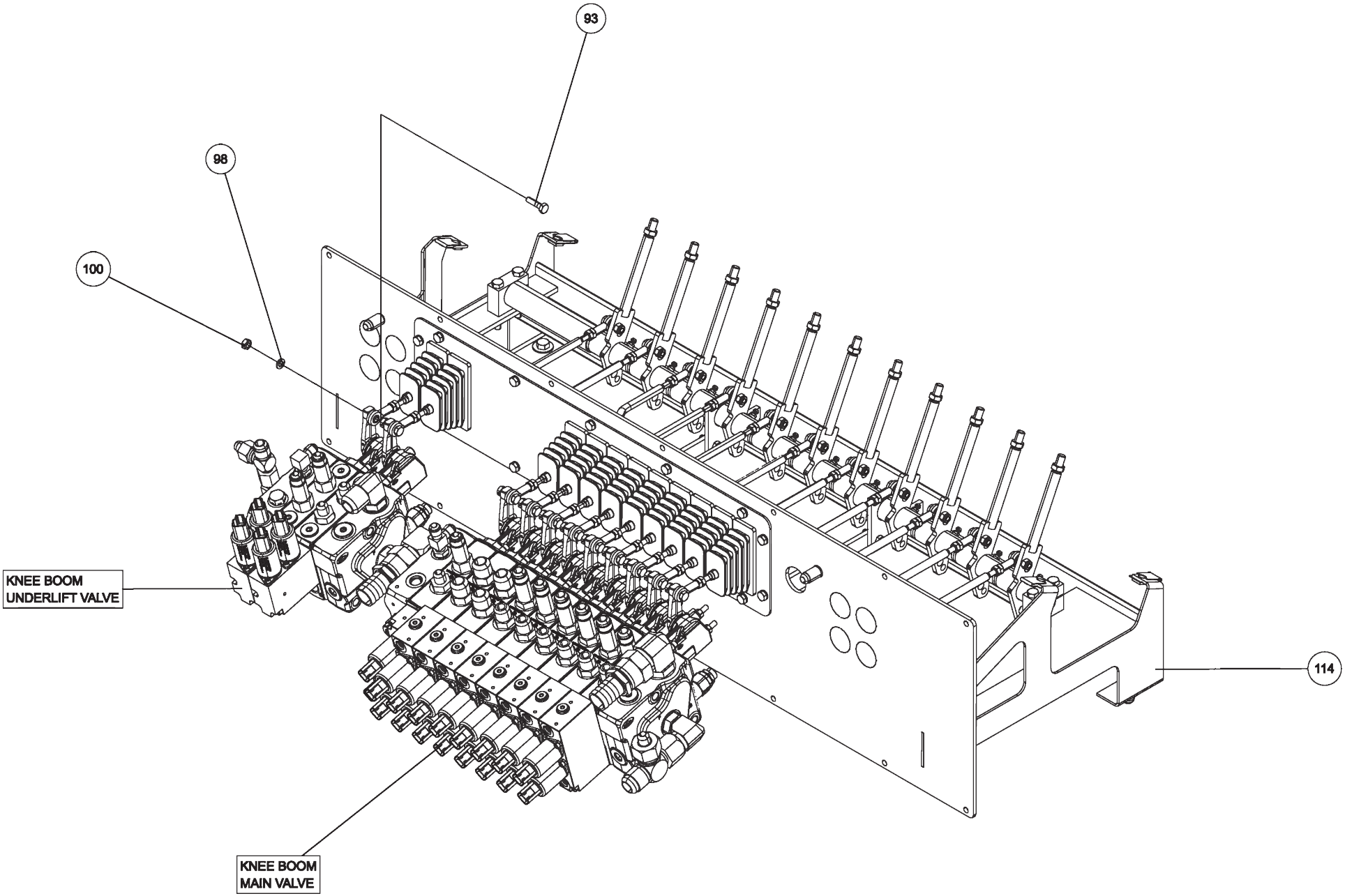

09009128 BASIC UNIT ASSEMBLY 1140 RXP KNEEBOOM (cont'd)

ITEM	PART NUMBER	DESCRIPTION	QTY
	09009128	BASIC UNIT ASSEMBLY 1140 RXP KB	
1	0300113	GREASE FITTING, 1/4-28 STR	1
2	03003419	HOSE, HYD 132" LG	1
3	03003420	HOSE, HYD 60" LG	1
4	03003421	HOSE, HYD 18"LG	3
5	03003424	HOSE, HYD 138"	1
6	03003425	HOSE, HYD 90" LG	4
7	03003426	HOSE, HYD 45" LG	6
8	0300364	CLAMP-HOSE,0.875"-2.75" 50"LBS	2
9	0300434	FITTING, HOSE BARB, 2	1
10	0300558	HOSE, SUCTION 2"ID 100R4 (C4)	1
11	0300835	KNOB-BOOM (UP-DOWN)	1
12	0300837	KNOB-BOOM (IN-OUT)	1
13	0300865	FITTING, CONNECTOR 8MJ-8MJ	5
14	0301113	HOSE HYD, 82"	2
15	0301207	HOSE HYD, 72"	4
16	0301377	FITTING, TEE,3/8" JIC	1
17	0301388	ELBOW, 8MJ-8MB90	3
18	0301422	FITTING, 6MJ-6MJ SMALL	4
19	0301473	HOSE HYD, 18" LG	2
20	0301522	ADAPTER, 6MJ-6MB	1
21	0301529	HOSE HYD, 58	2
22	03015922	STAUFF CLAMP, 3/8 TWIN	4
23	03016142	TUBE, HYD ASSY SF TO O/R	4
24	0301695	HOSE HYD, 91"	1
25	0301837	INLINE ORIFICE	4
26	0301909	RECEPTACLE BOOT	1
27	0301946	FITTING, BLKHD CONNECT	3
28	0301948	HD 7 WAY TRAILER CONNECT	1
29	0301961	BALL VALVE 2	1
30	0302056	HOSE HYD, 183"	5
31	0302205	GAUGE, FLUSH MNTG-6000 PSI	2
32	0302312	HOSE HYD, 43" LG 12G2AT	1
33	0302367	PIPE NIPPLE - 2 X 4	1
34	0302372	HOSE HYD, 240" LG	4
35	0302508	FITTING, ELL 8MJ-8MB 90LL	3
36	0302534	FITTING, 45 DEG ELBOW	2
37	0302604	HOSE HYD, 44"	2
38	0302632	HOSE HYD, 40"	8
39	0302805	HOSE HYD, 10"	1
40	0302856	KNOB-TILT, 3/8-16 THREAD	1
41	0302881	HOSE HYD, 45"	1
42	0303170	HOSE, HYD. 75"	1
43	0303340	HOSE HYD, 50" LG	1
44	0303379	KNOB, SWING CW - CCW	1
45	0303380	KNOB-UNDERLIFT (IN-OUT)	1
46	0303381	KNOB - UNDERLIFT (UP-DN)	1

ITEM	PART NUMBER	DESCRIPTION	QTY
47	0303391	HOSE 8AT2(8FJX-8FJ90) 110"	3
48	0303538	FITT, ADAPTER -BRASS 8FP-6MP	1
49	0303539	QUICK DISCONNECT 3/8 FPT	1
50	0303950	FITTING 45DEG DOT BRASS	1
51	0304363	QUICK DISCONNECT 1/2 FPT	2
52	0306537	EMERGENCY SWITCH	2
53	0306540	ROTARY SELECT SWITCH OPERATOR	12
54	0306870	HOSE HYDR - 96"	4
55	0306921	PIPE PLUG, 2" SQ HD	1
56	0307061	WINCH-35K dp 2-SP N.DRUM W/TEN	3
57	0307452	HOSE, HYD 146" LG	4
58	0307472	HOSE, HYD ASSY 24" LG	1
59	0307604	KNOB, RED LONG - SK0700-07	5
60	0310314	HOSE ASSY - 42" LG	4
61	0310456	PUSH BUTTN OPER W/MTG(RED) N/C	2
62	0310581	hose assy- 96" 8 fjx-10fjx90	4
63	0310637	PLUG, HOLE	2
64	0311191	ROLLER, POLY, 4" X 5/8"	2
65	0311305	T-BOLT CLAMP 1 3/8 TO 1 9/16	4
66	0311355	HOBBS HOURMETER	1
67	0311417	HOSE, 196" 3/8 2 X STRAIGHT	2
68	0311426	HOSE ASSY, 80" 4FJX-4FJX45	16
69	0311755	WATER SEPARATOR-MONNIER	1
70	0313129	HOSE, 1 SUCTION 16C4	34
71	0400005	SCREW, 6-32X1/2 PRH SS	6
72	0400012	LKWASHER, #8 SS	8
73	0400021	SCREW, 8-32X1/2 PRH SS	12
74	04000381	SS BHSCS 1/4-20 X 1	15
75	0400062	SCREW, 1/4-20X3/4 THC	3
76	0400066	SCREW, 1/4-20X3/4 HHC GR5	8
77	0400288	SCREW, 3/4-10X2-1/2 HHC GR8	16
78	0400307	SCREW, 7/8-9X4 HHC GR8	16
79	0400369	NUT, 1/4 SPR J	11
80	0400431	NUT, 3/4-10 LOK GR8	16
81	0400437	NUT, 7/8-9 LOK GR8	16
82	0400452	LKWASHER, 1/4	8
83	0400454	WASHER, 1/4 SS	2
84	0400473	WASHER, 7/8 PL GR8	16
85	0400489	WASHER, 3/4 SAE GR8	32
86	0400491	LKWASHER, 1/2	20
87	0400492	USS FLAT WASHER, 1/2	2
88	0400497	WASHER, 1/2 GR8	6
89	0400498	WASHER, 1/2X2X0.125	14
90	0400554	PIN, 3/8X1 SPR	3
91	0400900	NUT, 1/2-13 LOK JAM	2
92	0402020	SCREW, 1/4-20X3/4 HHC SS	2
93	0402021	SCREW, 1/4-20X1 HHC SS	13

ITEM	PART NUMBER	DESCRIPTION	QTY
94	0402044	SCREW, 3/8-16X1-1/2 HHC SS	8
95	0402080	WASHER, #8 SS	8
96	0402094	NUT, HEX 6-32 SS	6
97	0402110	WASHER, 1/4 SS	17
98	0402111	LKWASHER, 1/4 SS	30
99	0402113	NUT, 1/4-20 LOK SS	2
100	0402114	NUT, 1/4-20 LOK REV SS	11
101	0402120	WASHER, 3/8 SS	8
102	0402123	NUT, 3/8-16 LOK SS	8
103	07005922	MOUNT-HYD GAUGE	1
104	0712230	BOSS, TURNTABLE LOCK	4
105	0722104	ANGLE - WINCH MOUNTING	4
106	0724651	COVER	2
107	08005607	WINCH MOUNT, 35K FRONT	2
108	08005608	WINCH MOUNT, 35K REAR	2
109	0806994	HOUSE LOCK INDICATOR WELDMENT	4
110	0810433	HHU CHAIN ROLLER BRACKET, LH	1
111	0810434	HHU CHAIN ROLLER BRACKET, RH	1
112	09000097	ILLUMINATED LEGEND ASSY-LT UPP	1
113	09000135	ILLUMINATED LEGEND ASSY-RT UPP	1
114	09002247	CONTROL ASSY, 11 HANDLE WV	1
115	09002910	PUMP KIT, 4K KNEE BOOM	1
116	09002949	ILLUM LEGEND LT 1150 KNEE	1
117	09004266	U/L BOOM ASSEMBLY (SHORT)	1
118	09009470	SUBFRAME ASSY, 1140 RXP KB 12V	1
119	0906532	SWIVEL - BOOM ASSEMBLY	1
120	0908418	KIT-MUDFLAP CENTURY ROTATOR	1
121	0910231	BOOM ASSEMBLY 1140 (3-STAGE)	1
122	0910232	WRECKER FRAME ASSEMBLY - 1140	1
123	0910411	KIT - REAR OUTRGR 4-STG LG BOS	1
124	0910838	BUA '10 ROT AL BODY W/ XP TRI	1
125	0910935	XBAR ASY HRDWR-XHD 5X5 CENTURY	1
126	0911237	ILLUM LEGEND ASSY RH LWR WLV	1
127	0911324	RH CTL STATION ASSY 5 WINCH WV	1
128	0911804	AIR REGULATOR-GAUGE ASSEMBLY	4
129	24773017	HOSE ASSEMBLY 140"LG	2
130	24773018	HOSE ASSEMBLY 140"LG	2
131	9010520	FITTING-ELBOW 1/4T-1/4NPT	5
132	9024041	SWITCH, ROCKER SPST RED 12V21A	22
133	9041402	1/2 NC X 1 1/4 HHCS PLT GR8	6
134	9041403	1/2 NC X 1 1/2 HHCS PL GR8	14
135	9402970	TOOLBOX MTG. PAD	14
136	942480011	PLATE,SLOT-SS REAR WASHER TBOX	16
137	AWS-6821-A	HOSE ASSY-PRESSURE	10
138	FC41	FITTING-90DEG BLKHD ELB W/ NUT	8
139	HC1291	FITTING, 4MJ-4MB STR THR	16

09009128 BASIC UNIT ASSEMBLY 1140 RXP KNEEBOOM (cont'd)

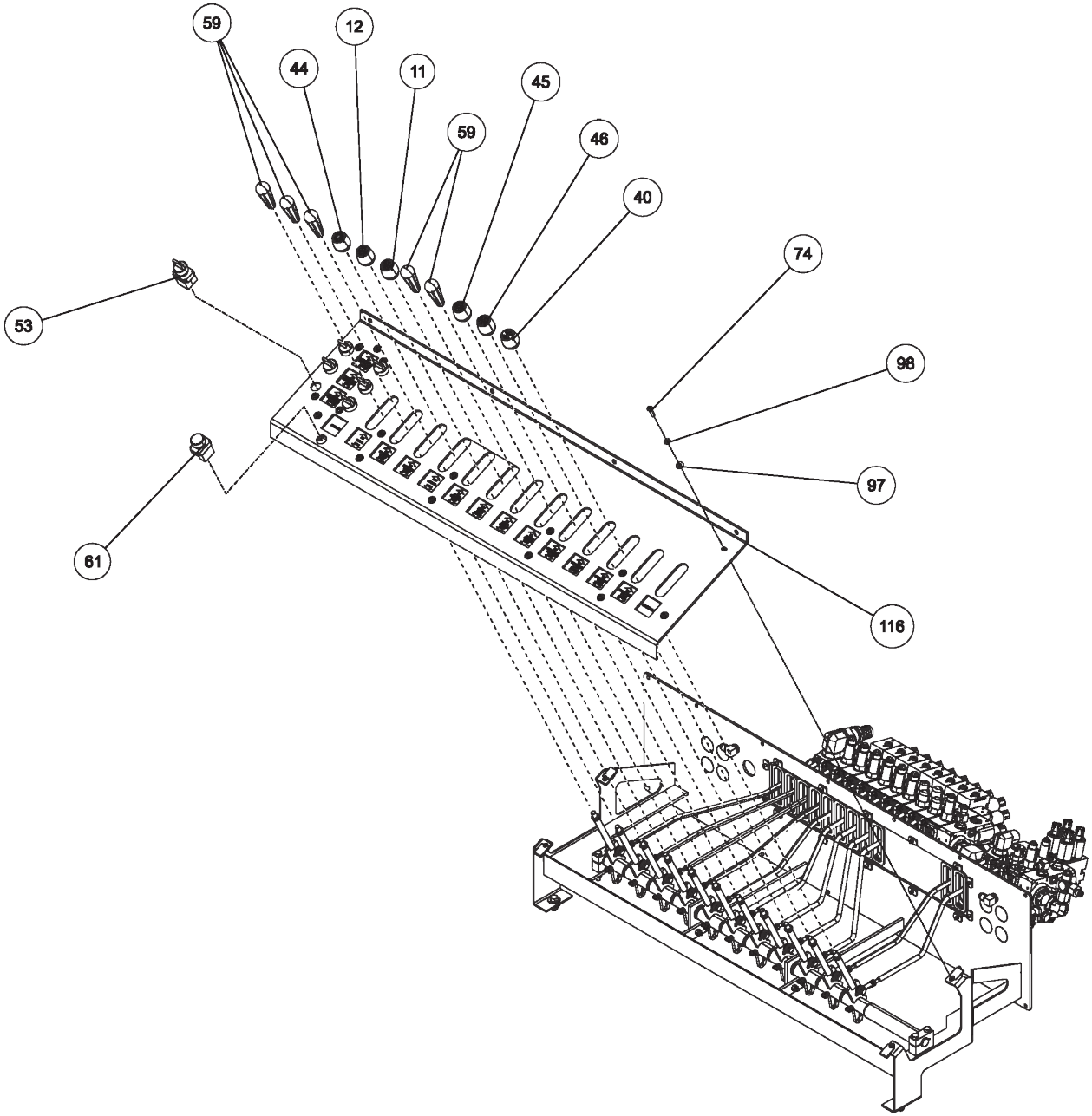

09009128 BASIC UNIT ASSEMBLY 1140 RXP KNEEBOOM (cont'd)

ITEM	PART NUMBER	DESCRIPTION	QTY
	09009128	BASIC UNIT ASSEMBLY 1140 RXP KB	
1	0300113	GREASE FITTING, 1/4-28 STR	1
2	03003419	HOSE, HYD 132" LG	1
3	03003420	HOSE, HYD 60" LG	1
4	03003421	HOSE, HYD 18"LG	3
5	03003424	HOSE, HYD 138"	1
6	03003425	HOSE, HYD 90" LG	4
7	03003426	HOSE, HYD 45" LG	6
8	0300364	CLAMP-HOSE,0.875"-2.75" 50"LBS	2
9	0300434	FITTING, HOSE BARB, 2	1
10	0300558	HOSE, SUCTION 2"ID 100R4 (C4)	1
11	0300835	KNOB-BOOM (UP-DOWN)	1
12	0300837	KNOB-BOOM (IN-OUT)	1
13	0300865	FITTING, CONNECTOR 8MJ-8MJ	5
14	0301113	HOSE HYD, 82"	2
15	0301207	HOSE HYD, 72"	4
16	0301377	FITTING, TEE,3/8" JIC	1
17	0301388	ELBOW, 8MJ-8MB90	3
18	0301422	FITTING, 6MJ-6MJ SMALL	4
19	0301473	HOSE HYD, 18" LG	2
20	0301522	ADAPTER, 6MJ-6MB	1
21	0301529	HOSE HYD, 58	2
22	03015922	STAUFF CLAMP, 3/8 TWIN	4
23	03016142	TUBE, HYD ASSY SF TO O/R	4
24	0301695	HOSE HYD, 91"	1
25	0301837	INLINE ORIFICE	4
26	0301909	RECEPTACLE BOOT	1
27	0301946	FITTING, BLKHD CONNECT	3
28	0301948	HD 7 WAY TRAILER CONNECT	1
29	0301961	BALL VALVE 2	1
30	0302056	HOSE HYD, 183"	5
31	0302205	GAUGE, FLUSH MNTG-6000 PSI	2
32	0302312	HOSE HYD, 43" LG 12G2AT	1
33	0302367	PIPE NIPPLE - 2 X 4	1
34	0302372	HOSE HYD, 240" LG	4
35	0302508	FITTING, ELL 8MJ-8MB 90LL	3
36	0302534	FITTING, 45 DEG ELBOW	2
37	0302604	HOSE HYD, 44"	2
38	0302632	HOSE HYD, 40"	8
39	0302805	HOSE HYD, 10"	1
40	0302856	KNOB-TILT, 3/8-16 THREAD	1
41	0302881	HOSE HYD, 45"	1
42	0303170	HOSE, HYD. 75"	1
43	0303340	HOSE HYD, 50" LG	1
44	0303379	KNOB, SWING CW - CCW	1
45	0303380	KNOB-UNDERLIFT (IN-OUT)	1
46	0303381	KNOB - UNDERLIFT (UP-DN)	1

ITEM	PART NUMBER	DESCRIPTION	QTY
47	0303391	HOSE 8AT2(8FJX-8FJ90) 110"	3
48	0303538	FITT, ADAPTER -BRASS 8FP-6MP	1
49	0303539	QUICK DISCONNECT 3/8 FPT	1
50	0303950	FITTING 45DEG DOT BRASS	1
51	0304363	QUICK DISCONNECT 1/2 FPT	2
52	0306537	EMERGENCY SWITCH	2
53	0306540	ROTARY SELECT SWITCH OPERATOR	12
54	0306870	HOSE HYDR - 96"	4
55	0306921	PIPE PLUG, 2" SQ HD	1
56	0307061	WINCH-35K dp 2-SP N.DRUM W/TEN	3
57	0307452	HOSE, HYD 146" LG	4
58	0307472	HOSE, HYD ASSY 24" LG	1
59	0307604	KNOB, RED LONG - SK0700-07	5
60	0310314	HOSE ASSY - 42" LG	4
61	0310456	PUSH BUTTN OPER W/MTG(RED) N/C	2
62	0310581	hose assy- 96" 8 fjx-10fjx90	4
63	0310637	PLUG, HOLE	2
64	0311191	ROLLER, POLY, 4" X 5/8"	2
65	0311305	T-BOLT CLAMP 1 3/8 TO 1 9/16	4
66	0311355	HOBBS HOURMETER	1
67	0311417	HOSE, 196" 3/8 2 X STRAIGHT	2
68	0311426	HOSE ASSY, 80" 4FJX-4FJX45	16
69	0311755	WATER SEPARATOR-MONNIER	1
70	0313129	HOSE, 1 SUCTION 16C4	34
71	0400005	SCREW, 6-32X1/2 PRH SS	6
72	0400012	LKWASHER, #8 SS	8
73	0400021	SCREW, 8-32X1/2 PRH SS	12
74	04000381	SS BHSCS 1/4-20 X 1	15
75	0400062	SCREW, 1/4-20X3/4 THC	3
76	0400066	SCREW, 1/4-20X3/4 HHC GR5	8
77	0400288	SCREW, 3/4-10X2-1/2 HHC GR8	16
78	0400307	SCREW, 7/8-9X4 HHC GR8	16
79	0400369	NUT, 1/4 SPR J	11
80	0400431	NUT, 3/4-10 LOK GR8	16
81	0400437	NUT, 7/8-9 LOK GR8	16
82	0400452	LKWASHER, 1/4	8
83	0400454	WASHER, 1/4 SS	2
84	0400473	WASHER, 7/8 PL GR8	16
85	0400489	WASHER, 3/4 SAE GR8	32
86	0400491	LKWASHER, 1/2	20
87	0400492	USS FLAT WASHER, 1/2	2
88	0400497	WASHER, 1/2 GR8	6
89	0400498	WASHER, 1/2X2X0.125	14
90	0400554	PIN, 3/8X1 SPR	3
91	0400900	NUT, 1/2-13 LOK JAM	2
92	0402020	SCREW, 1/4-20X3/4 HHC SS	2
93	0402021	SCREW, 1/4-20X1 HHC SS	13

ITEM	PART NUMBER	DESCRIPTION	QTY
94	0402044	SCREW, 3/8-16X1-1/2 HHC SS	8
95	0402080	WASHER, #8 SS	8
96	0402094	NUT, HEX 6-32 SS	6
97	0402110	WASHER, 1/4 SS	17
98	0402111	LKWASHER, 1/4 SS	30
99	0402113	NUT, 1/4-20 LOK SS	2
100	0402114	NUT, 1/4-20 LOK REV SS	11
101	0402120	WASHER, 3/8 SS	8
102	0402123	NUT, 3/8-16 LOK SS	8
103	07005922	MOUNT-HYD GAUGE	1
104	0712230	BOSS, TURNTABLE LOCK	4
105	0722104	ANGLE - WINCH MOUNTING	4
106	0724651	COVER	2
107	08005607	WINCH MOUNT, 35K FRONT	2
108	08005608	WINCH MOUNT, 35K REAR	2
109	0806994	HOUSE LOCK INDICATOR WELDMENT	4
110	0810433	HHU CHAIN ROLLER BRACKET, LH	1
111	0810434	HHU CHAIN ROLLER BRACKET, RH	1
112	09000097	ILLUMINATED LEGEND ASSY-LT UPP	1
113	09000135	ILLUMINATED LEGEND ASSY-RT UPP	1
114	09002247	CONTROL ASSY, 11 HANDLE WV	1
115	09002910	PUMP KIT, 4K KNEE BOOM	1
116	09002949	ILLUM LEGEND LT 1150 KNEE	1
117	09004266	U/L BOOM ASSEMBLY (SHORT)	1
118	09009470	SUBFRAME ASSY, 1140 RXP KB 12V	1
119	0906532	SWIVEL - BOOM ASSEMBLY	1
120	0908418	KIT-MUDFLAP CENTURY ROTATOR	1
121	0910231	BOOM ASSEMBLY 1140 (3-STAGE)	1
122	0910232	WRECKER FRAME ASSEMBLY - 1140	1
123	0910411	KIT - REAR OUTRGR 4-STG LG BOS	1
124	0910838	BUA '10 ROT AL BODY W/ XP TRI	1
125	0910935	XBAR ASY HRDWR-XHD 5X5 CENTURY	1
126	0911237	ILLUM LEGEND ASSY RH LWR WLV	1
127	0911324	RH CTL STATION ASSY 5 WINCH WV	1
128	0911804	AIR REGULATOR-GAUGE ASSEMBLY	4
129	24773017	HOSE ASSEMBLY 140"LG	2
130	24773018	HOSE ASSEMBLY 140"LG	2
131	9010520	FITTING-ELBOW 1/4T-1/4NPT	5
132	9024041	SWITCH, ROCKER SPST RED 12V21A	22
133	9041402	1/2 NC X 1 1/4 HHCS PLT GR8	6
134	9041403	1/2 NC X 1 1/2 HHCS PL GR8	14
135	9402970	TOOLBOX MTG. PAD	14
136	942480011	PLATE,SLOT-SS REAR WASHER TBOX	16
137	AWS-6821-A	HOSE ASSY-PRESSURE	10
138	FC41	FITTING-90DEG BLKHD ELB W/ NUT	8
139	HC1291	FITTING, 4MJ-4MB STR THR	16

09009128 BASIC UNIT ASSEMBLY 1140 RXP KNEEBOOM (cont'd)

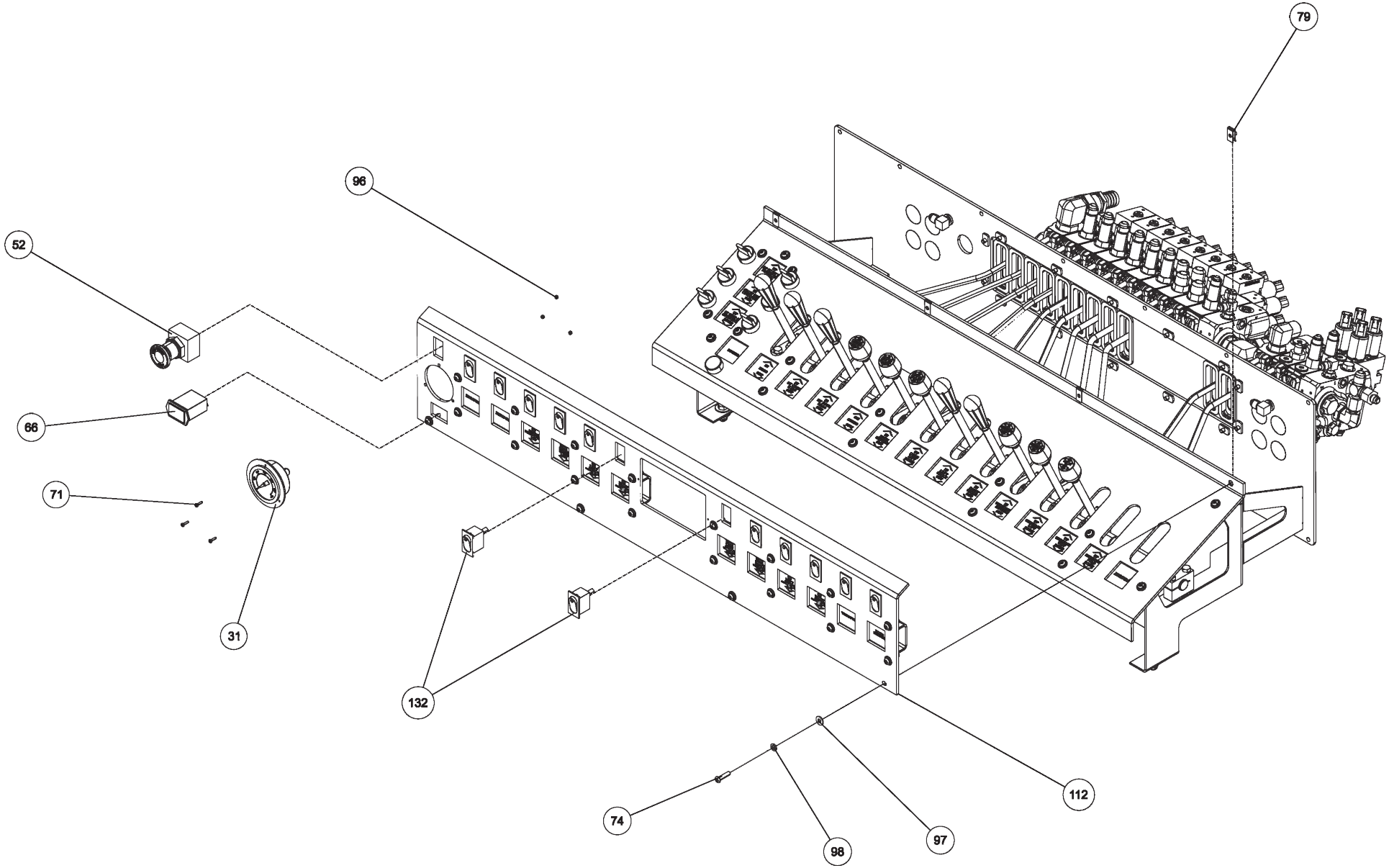

09009128 BASIC UNIT ASSEMBLY 1140 RXP KNEEBOOM (cont'd)

ITEM	PART NUMBER	DESCRIPTION	QTY
	09009128	BASIC UNIT ASSEMBLY 1140 RXP KB	
1	0300113	GREASE FITTING, 1/4-28 STR	1
2	03003419	HOSE, HYD 132" LG	1
3	03003420	HOSE, HYD 60" LG	1
4	03003421	HOSE, HYD 18"LG	3
5	03003424	HOSE, HYD 138"	1
6	03003425	HOSE, HYD 90" LG	4
7	03003426	HOSE, HYD 45" LG	6
8	0300364	CLAMP-HOSE,0.875"-2.75" 50"LBS	2
9	0300434	FITTING, HOSE BARB, 2	1
10	0300558	HOSE, SUCTION 2"ID 100R4 (C4)	1
11	0300835	KNOB-BOOM (UP-DOWN)	1
12	0300837	KNOB-BOOM (IN-OUT)	1
13	0300865	FITTING, CONNECTOR 8MJ-8MJ	5
14	0301113	HOSE HYD, 82"	2
15	0301207	HOSE HYD, 72"	4
16	0301377	FITTING, TEE,3/8" JIC	1
17	0301388	ELBOW, 8MJ-8MB90	3
18	0301422	FITTING, 6MJ-6MJ SMALL	4
19	0301473	HOSE HYD, 18" LG	2
20	0301522	ADAPTER, 6MJ-6MB	1
21	0301529	HOSE HYD, 58	2
22	03015922	STAUFF CLAMP, 3/8 TWIN	4
23	03016142	TUBE, HYD ASSY SF TO O/R	4
24	0301695	HOSE HYD, 91"	1
25	0301837	INLINE ORIFICE	4
26	0301909	RECEPTACLE BOOT	1
27	0301946	FITTING, BLKHD CONNECT	3
28	0301948	HD 7 WAY TRAILER CONNECT	1
29	0301961	BALL VALVE 2	1
30	0302056	HOSE HYD, 183"	5
31	0302205	GAUGE, FLUSH MNTG-6000 PSI	2
32	0302312	HOSE HYD, 43" LG 12G2AT	1
33	0302367	PIPE NIPPLE - 2 X 4	1
34	0302372	HOSE HYD, 240" LG	4
35	0302508	FITTING, ELL 8MJ-8MB 90LL	3
36	0302534	FITTING, 45 DEG ELBOW	2
37	0302604	HOSE HYD, 44"	2
38	0302632	HOSE HYD, 40"	8
39	0302805	HOSE HYD, 10"	1
40	0302856	KNOB-TILT, 3/8-16 THREAD	1
41	0302881	HOSE HYD, 45"	1
42	0303170	HOSE, HYD. 75"	1
43	0303340	HOSE HYD, 50" LG	1
44	0303379	KNOB, SWING CW - CCW	1
45	0303380	KNOB-UNDERLIFT (IN-OUT)	1
46	0303381	KNOB - UNDERLIFT (UP-DN)	1

ITEM	PART NUMBER	DESCRIPTION	QTY
47	0303391	HOSE 8AT2(8FJX-8FJ90) 110"	3
48	0303538	FITT, ADAPTER -BRASS 8FP-6MP	1
49	0303539	QUICK DISCONNECT 3/8 FPT	1
50	0303950	FITTING 45DEG DOT BRASS	1
51	0304363	QUICK DISCONNECT 1/2 FPT	2
52	0306537	EMERGENCY SWITCH	2
53	0306540	ROTARY SELECT SWITCH OPERATOR	12
54	0306870	HOSE HYDR - 96"	4
55	0306921	PIPE PLUG, 2" SQ HD	1
56	0307061	WINCH-35K dp 2-SP N.DRUM W/TEN	3
57	0307452	HOSE, HYD 146" LG	4
58	0307472	HOSE, HYD ASSY 24" LG	1
59	0307604	KNOB, RED LONG - SK0700-07	5
60	0310314	HOSE ASSY - 42" LG	4
61	0310456	PUSH BUTTN OPER W/MTG(RED) N/C	2
62	0310581	hose assy- 96" 8 fjx-10fjx90	4
63	0310637	PLUG, HOLE	2
64	0311191	ROLLER, POLY, 4" X 5/8"	2
65	0311305	T-BOLT CLAMP 1 3/8 TO 1 9/16	4
66	0311355	HOBBS HOURMETER	1
67	0311417	HOSE, 196" 3/8 2 X STRAIGHT	2
68	0311426	HOSE ASSY, 80" 4FJX-4FJX45	16
69	0311755	WATER SEPARATOR-MONNIER	1
70	0313129	HOSE, 1 SUCTION 16C4	34
71	0400005	SCREW, 6-32X1/2 PRH SS	6
72	0400012	LKWASHER, #8 SS	8
73	0400021	SCREW, 8-32X1/2 PRH SS	12
74	04000381	SS BHSCS 1/4-20 X 1	15
75	0400062	SCREW, 1/4-20X3/4 THC	3
76	0400066	SCREW, 1/4-20X3/4 HHC GR5	8
77	0400288	SCREW, 3/4-10X2-1/2 HHC GR8	16
78	0400307	SCREW, 7/8-9X4 HHC GR8	16
79	0400369	NUT, 1/4 SPR J	11
80	0400431	NUT, 3/4-10 LOK GR8	16
81	0400437	NUT, 7/8-9 LOK GR8	16
82	0400452	LKWASHER, 1/4	8
83	0400454	WASHER, 1/4 SS	2
84	0400473	WASHER, 7/8 PL GR8	16
85	0400489	WASHER, 3/4 SAE GR8	32
86	0400491	LKWASHER, 1/2	20
87	0400492	USS FLAT WASHER, 1/2	2
88	0400497	WASHER, 1/2 GR8	6
89	0400498	WASHER, 1/2X2X0.125	14
90	0400554	PIN, 3/8X1 SPR	3
91	0400900	NUT, 1/2-13 LOK JAM	2
92	0402020	SCREW, 1/4-20X3/4 HHC SS	2
93	0402021	SCREW, 1/4-20X1 HHC SS	13

ITEM	PART NUMBER	DESCRIPTION	QTY
94	0402044	SCREW, 3/8-16X1-1/2 HHC SS	8
95	0402080	WASHER, #8 SS	8
96	0402094	NUT, HEX 6-32 SS	6
97	0402110	WASHER, 1/4 SS	17
98	0402111	LKWASHER, 1/4 SS	30
99	0402113	NUT, 1/4-20 LOK SS	2
100	0402114	NUT, 1/4-20 LOK REV SS	11
101	0402120	WASHER, 3/8 SS	8
102	0402123	NUT, 3/8-16 LOK SS	8
103	07005922	MOUNT-HYD GAUGE	1
104	0712230	BOSS, TURNTABLE LOCK	4
105	0722104	ANGLE - WINCH MOUNTING	4
106	0724651	COVER	2
107	08005607	WINCH MOUNT, 35K FRONT	2
108	08005608	WINCH MOUNT, 35K REAR	2
109	0806994	HOUSE LOCK INDICATOR WELDMENT	4
110	0810433	HHU CHAIN ROLLER BRACKET, LH	1
111	0810434	HHU CHAIN ROLLER BRACKET, RH	1
112	09000097	ILLUMINATED LEGEND ASSY-LT UPP	1
113	09000135	ILLUMINATED LEGEND ASSY-RT UPP	1
114	09002247	CONTROL ASSY, 11 HANDLE WV	1
115	09002910	PUMP KIT, 4K KNEE BOOM	1
116	09002949	ILLUM LEGEND LT 1150 KNEE	1
117	09004266	U/L BOOM ASSEMBLY (SHORT)	1
118	09009470	SUBFRAME ASSY, 1140 RXP KB 12V	1
119	0906532	SWIVEL - BOOM ASSEMBLY	1
120	0908418	KIT-MUDFLAP CENTURY ROTATOR	1
121	0910231	BOOM ASSEMBLY 1140 (3-STAGE)	1
122	0910232	WRECKER FRAME ASSEMBLY - 1140	1
123	0910411	KIT - REAR OUTRGR 4-STG LG BOS	1
124	0910838	BUA '10 ROT AL BODY W/ XP TRI	1
125	0910935	XBAR ASY HRDWR-XHD 5X5 CENTURY	1
126	0911237	ILLUM LEGEND ASSY RH LWR WLV	1
127	0911324	RH CTL STATION ASSY 5 WINCH WV	1
128	0911804	AIR REGULATOR-GAUGE ASSEMBLY	4
129	24773017	HOSE ASSEMBLY 140"LG	2
130	24773018	HOSE ASSEMBLY 140"LG	2
131	9010520	FITTING-ELBOW 1/4T-1/4NPT	5
132	9024041	SWITCH, ROCKER SPST RED 12V21A	22
133	9041402	1/2 NC X 1 1/4 HHCS PLT GR8	6
134	9041403	1/2 NC X 1 1/2 HHCS PL GR8	14
135	9402970	TOOLBOX MTG. PAD	14
136	942480011	PLATE,SLOT-SS REAR WASHER TBOX	16
137	AWS-6821-A	HOSE ASSY-PRESSURE	10
138	FC41	FITTING-90DEG BLKHD ELB W/ NUT	8
139	HC1291	FITTING, 4MJ-4MB STR THR	16

09009128 BASIC UNIT ASSEMBLY 1140 RXP KNEEBOOM (cont'd)

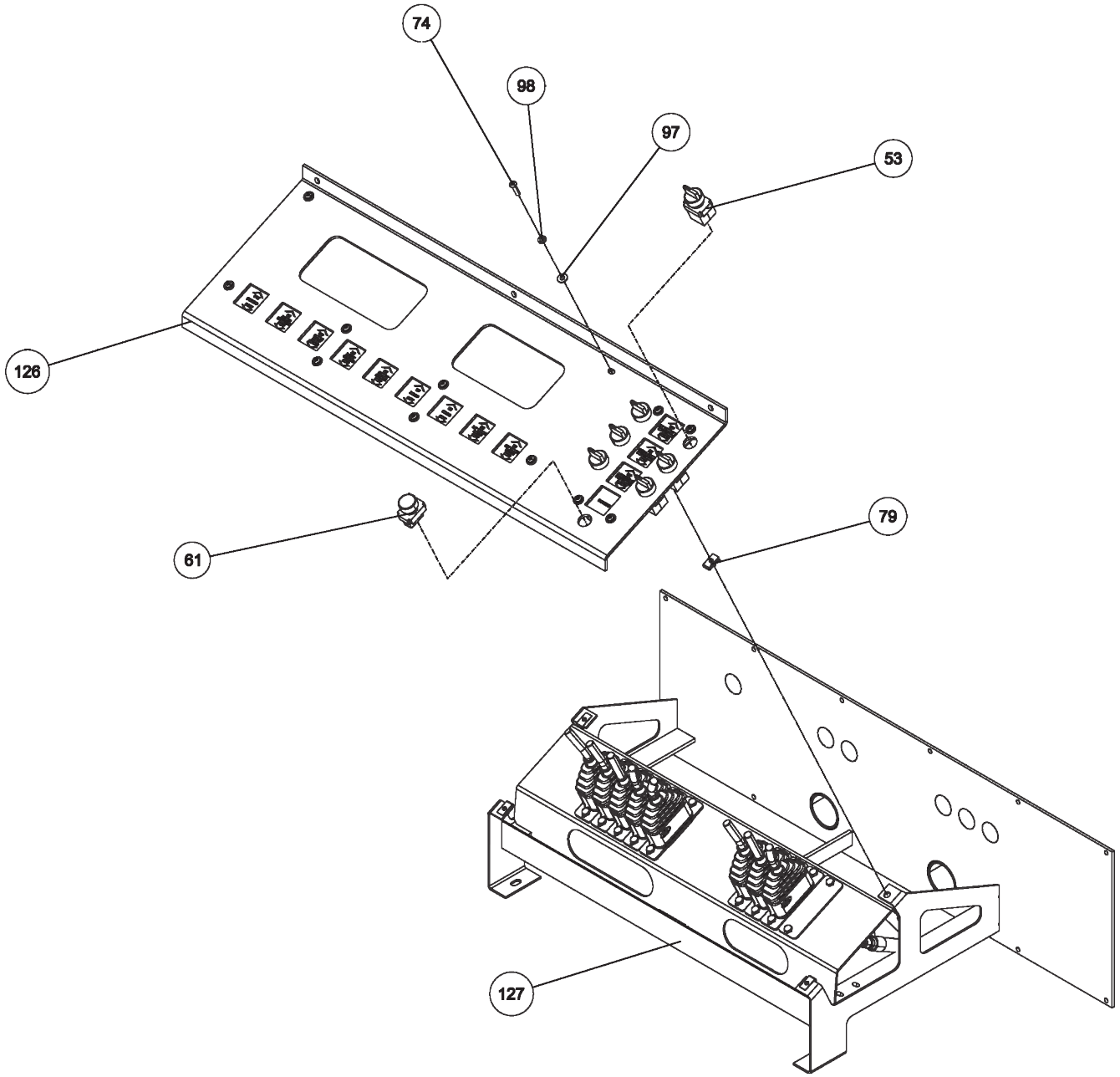

09009128 BASIC UNIT ASSEMBLY 1140 RXP KNEEBOOM (cont'd)

ITEM	PART NUMBER	DESCRIPTION	QTY
	09009128	BASIC UNIT ASSEMBLY 1140 RXP KB	
1	0300113	GREASE FITTING, 1/4-28 STR	1
2	03003419	HOSE, HYD 132" LG	1
3	03003420	HOSE, HYD 60" LG	1
4	03003421	HOSE, HYD 18"LG	3
5	03003424	HOSE, HYD 138"	1
6	03003425	HOSE, HYD 90" LG	4
7	03003426	HOSE, HYD 45" LG	6
8	0300364	CLAMP-HOSE,0.875"-2.75" 50"LBS	2
9	0300434	FITTING, HOSE BARB, 2	1
10	0300558	HOSE, SUCTION 2"ID 100R4 (C4)	1
11	0300835	KNOB-BOOM (UP-DOWN)	1
12	0300837	KNOB-BOOM (IN-OUT)	1
13	0300865	FITTING, CONNECTOR 8MJ-8MJ	5
14	0301113	HOSE HYD, 82"	2
15	0301207	HOSE HYD, 72"	4
16	0301377	FITTING, TEE,3/8" JIC	1
17	0301388	ELBOW, 8MJ-8MB90	3
18	0301422	FITTING, 6MJ-6MJ SMALL	4
19	0301473	HOSE HYD, 18" LG	2
20	0301522	ADAPTER, 6MJ-6MB	1
21	0301529	HOSE HYD, 58	2
22	03015922	STAUFF CLAMP, 3/8 TWIN	4
23	03016142	TUBE, HYD ASSY SF TO O/R	4
24	0301695	HOSE HYD, 91"	1
25	0301837	INLINE ORIFICE	4
26	0301909	RECEPTACLE BOOT	1
27	0301946	FITTING, BLKHD CONNECT	3
28	0301948	HD 7 WAY TRAILER CONNECT	1
29	0301961	BALL VALVE 2	1
30	0302056	HOSE HYD, 183"	5
31	0302205	GAUGE, FLUSH MNTG-6000 PSI	2
32	0302312	HOSE HYD, 43" LG 12G2AT	1
33	0302367	PIPE NIPPLE - 2 X 4	1
34	0302372	HOSE HYD, 240" LG	4
35	0302508	FITTING, ELL 8MJ-8MB 90LL	3
36	0302534	FITTING, 45 DEG ELBOW	2
37	0302604	HOSE HYD, 44"	2
38	0302632	HOSE HYD, 40"	8
39	0302805	HOSE HYD, 10"	1
40	0302856	KNOB-TILT, 3/8-16 THREAD	1
41	0302881	HOSE HYD, 45"	1
42	0303170	HOSE, HYD. 75"	1
43	0303340	HOSE HYD, 50" LG	1
44	0303379	KNOB, SWING CW - CCW	1
45	0303380	KNOB-UNDERLIFT (IN-OUT)	1
46	0303381	KNOB - UNDERLIFT (UP-DN)	1

ITEM	PART NUMBER	DESCRIPTION	QTY
47	0303391	HOSE 8AT2(8FJX-8FJ90) 110"	3
48	0303538	FITT, ADAPTER -BRASS 8FP-6MP	1
49	0303539	QUICK DISCONNECT 3/8 FPT	1
50	0303950	FITTING 45DEG DOT BRASS	1
51	0304363	QUICK DISCONNECT 1/2 FPT	2
52	0306537	EMERGENCY SWITCH	2
53	0306540	ROTARY SELECT SWITCH OPERATOR	12
54	0306870	HOSE HYDR - 96"	4
55	0306921	PIPE PLUG, 2" SQ HD	1
56	0307061	WINCH-35K dp 2-SP N.DRUM W/TEN	3
57	0307452	HOSE, HYD 146" LG	4
58	0307472	HOSE, HYD ASSY 24" LG	1
59	0307604	KNOB, RED LONG - SK0700-07	5
60	0310314	HOSE ASSY - 42" LG	4
61	0310456	PUSH BUTTN OPER W/MTG(RED) N/C	2
62	0310581	hose assy- 96" 8 fjx-10fjx90	4
63	0310637	PLUG, HOLE	2
64	0311191	ROLLER, POLY, 4" X 5/8"	2
65	0311305	T-BOLT CLAMP 1 3/8 TO 1 9/16	4
66	0311355	HOBBS HOURMETER	1
67	0311417	HOSE, 196" 3/8 2 X STRAIGHT	2
68	0311426	HOSE ASSY, 80" 4FJX-4FJX45	16
69	0311755	WATER SEPARATOR-MONNIER	1
70	0313129	HOSE, 1 SUCTION 16C4	34
71	0400005	SCREW, 6-32X1/2 PRH SS	6
72	0400012	LKWASHER, #8 SS	8
73	0400021	SCREW, 8-32X1/2 PRH SS	12
74	04000381	SS BHSCS 1/4-20 X 1	15
75	0400062	SCREW, 1/4-20X3/4 THC	3
76	0400066	SCREW, 1/4-20X3/4 HHC GR5	8
77	0400288	SCREW, 3/4-10X2-1/2 HHC GR8	16
78	0400307	SCREW, 7/8-9X4 HHC GR8	16
79	0400369	NUT, 1/4 SPR J	11
80	0400431	NUT, 3/4-10 LOK GR8	16
81	0400437	NUT, 7/8-9 LOK GR8	16
82	0400452	LKWASHER, 1/4	8
83	0400454	WASHER, 1/4 SS	2
84	0400473	WASHER, 7/8 PL GR8	16
85	0400489	WASHER, 3/4 SAE GR8	32
86	0400491	LKWASHER, 1/2	20
87	0400492	USS FLAT WASHER, 1/2	2
88	0400497	WASHER, 1/2 GR8	6
89	0400498	WASHER, 1/2X2X0.125	14
90	0400554	PIN, 3/8X1 SPR	3
91	0400900	NUT, 1/2-13 LOK JAM	2
92	0402020	SCREW, 1/4-20X3/4 HHC SS	2
93	0402021	SCREW, 1/4-20X1 HHC SS	13

ITEM	PART NUMBER	DESCRIPTION	QTY
94	0402044	SCREW, 3/8-16X1-1/2 HHC SS	8
95	0402080	WASHER, #8 SS	8
96	0402094	NUT, HEX 6-32 SS	6
97	0402110	WASHER, 1/4 SS	17
98	0402111	LKWASHER, 1/4 SS	30
99	0402113	NUT, 1/4-20 LOK SS	2
100	0402114	NUT, 1/4-20 LOK REV SS	11
101	0402120	WASHER, 3/8 SS	8
102	0402123	NUT, 3/8-16 LOK SS	8
103	07005922	MOUNT-HYD GAUGE	1
104	0712230	BOSS, TURNTABLE LOCK	4
105	0722104	ANGLE - WINCH MOUNTING	4
106	0724651	COVER	2
107	08005607	WINCH MOUNT, 35K FRONT	2
108	08005608	WINCH MOUNT, 35K REAR	2
109	0806994	HOUSE LOCK INDICATOR WELDMENT	4
110	0810433	HHU CHAIN ROLLER BRACKET, LH	1
111	0810434	HHU CHAIN ROLLER BRACKET, RH	1
112	09000097	ILLUMINATED LEGEND ASSY-LT UPP	1
113	09000135	ILLUMINATED LEGEND ASSY-RT UPP	1
114	09002247	CONTROL ASSY, 11 HANDLE WV	1
115	09002910	PUMP KIT, 4K KNEE BOOM	1
116	09002949	ILLUM LEGEND LT 1150 KNEE	1
117	09004266	U/L BOOM ASSEMBLY (SHORT)	1
118	09009470	SUBFRAME ASSY, 1140 RXP KB 12V	1
119	0906532	SWIVEL - BOOM ASSEMBLY	1
120	0908418	KIT-MUDFLAP CENTURY ROTATOR	1
121	0910231	BOOM ASSEMBLY 1140 (3-STAGE)	1
122	0910232	WRECKER FRAME ASSEMBLY - 1140	1
123	0910411	KIT - REAR OUTRGR 4-STG LG BOS	1
124	0910838	BUA '10 ROT AL BODY W/ XP TRI	1
125	0910935	XBAR ASY HRDWR-XHD 5X5 CENTURY	1
126	0911237	ILLUM LEGEND ASSY RH LWR WLV	1
127	0911324	RH CTL STATION ASSY 5 WINCH WV	1
128	0911804	AIR REGULATOR-GAUGE ASSEMBLY	4
129	24773017	HOSE ASSEMBLY 140"LG	2
130	24773018	HOSE ASSEMBLY 140"LG	2
131	9010520	FITTING-ELBOW 1/4T-1/4NPT	5
132	9024041	SWITCH, ROCKER SPST RED 12V21A	22
133	9041402	1/2 NC X 1 1/4 HHCS PLT GR8	6
134	9041403	1/2 NC X 1 1/2 HHCS PL GR8	14
135	9402970	TOOLBOX MTG. PAD	14
136	942480011	PLATE,SLOT-SS REAR WASHER TBOX	16
137	AWS-6821-A	HOSE ASSY-PRESSURE	10
138	FC41	FITTING-90DEG BLKHD ELB W/ NUT	8
139	HC1291	FITTING, 4MJ-4MB STR THR	16

09009128 BASIC UNIT ASSEMBLY 1140 RXP KNEEBOOM (cont'd)

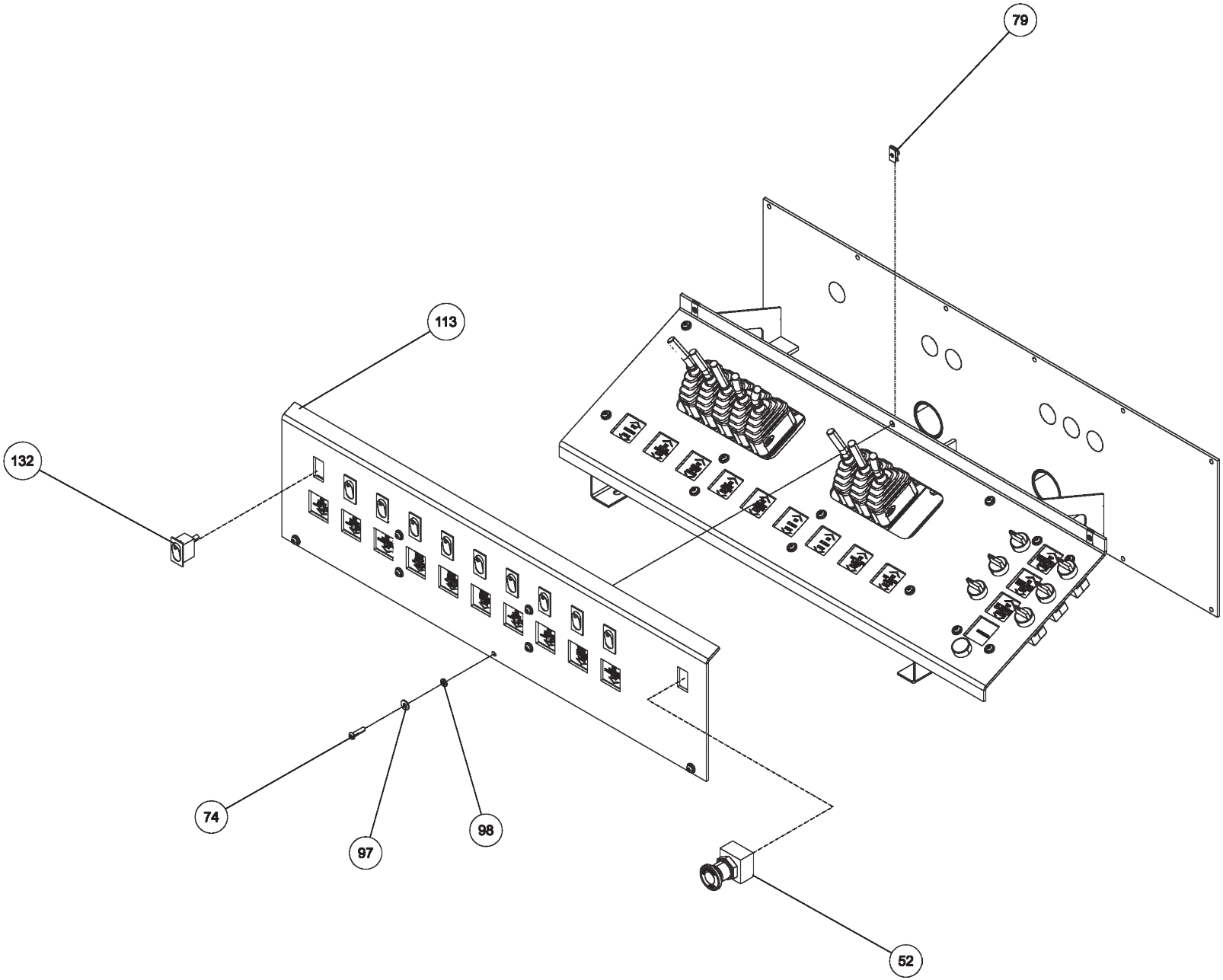

09009128 BASIC UNIT ASSEMBLY 1140 RXP KNEEBOOM (cont'd)

ITEM	PART NUMBER	DESCRIPTION	QTY
	09009128	BASIC UNIT ASSEMBLY 1140 RXP KB	
1	0300113	GREASE FITTING, 1/4-28 STR	1
2	03003419	HOSE, HYD 132" LG	1
3	03003420	HOSE, HYD 60" LG	1
4	03003421	HOSE, HYD 18"LG	3
5	03003424	HOSE, HYD 138"	1
6	03003425	HOSE, HYD 90" LG	4
7	03003426	HOSE, HYD 45" LG	6
8	0300364	CLAMP-HOSE,0.875"-2.75" 50"LBS	2
9	0300434	FITTING, HOSE BARB, 2	1
10	0300558	HOSE, SUCTION 2"ID 100R4 (C4)	1
11	0300835	KNOB-BOOM (UP-DOWN)	1
12	0300837	KNOB-BOOM (IN-OUT)	1
13	0300865	FITTING, CONNECTOR 8MJ-8MJ	5
14	0301113	HOSE HYD, 82"	2
15	0301207	HOSE HYD, 72"	4
16	0301377	FITTING, TEE,3/8" JIC	1
17	0301388	ELBOW, 8MJ-8MB90	3
18	0301422	FITTING, 6MJ-6MJ SMALL	4
19	0301473	HOSE HYD, 18" LG	2
20	0301522	ADAPTER, 6MJ-6MB	1
21	0301529	HOSE HYD, 58	2
22	03015922	STAUFF CLAMP, 3/8 TWIN	4
23	03016142	TUBE, HYD ASSY SF TO O/R	4
24	0301695	HOSE HYD, 91"	1
25	0301837	INLINE ORIFICE	4
26	0301909	RECEPTACLE BOOT	1
27	0301946	FITTING, BLKHD CONNECT	3
28	0301948	HD 7 WAY TRAILER CONNECT	1
29	0301961	BALL VALVE 2	1
30	0302056	HOSE HYD, 183"	5
31	0302205	GAUGE, FLUSH MNTG-6000 PSI	2
32	0302312	HOSE HYD, 43" LG 12G2AT	1
33	0302367	PIPE NIPPLE - 2 X 4	1
34	0302372	HOSE HYD, 240" LG	4
35	0302508	FITTING, ELL 8MJ-8MB 90LL	3
36	0302534	FITTING, 45 DEG ELBOW	2
37	0302604	HOSE HYD, 44"	2
38	0302632	HOSE HYD, 40"	8
39	0302805	HOSE HYD, 10"	1
40	0302856	KNOB-TILT, 3/8-16 THREAD	1
41	0302881	HOSE HYD, 45"	1
42	0303170	HOSE, HYD. 75"	1
43	0303340	HOSE HYD, 50" LG	1
44	0303379	KNOB, SWING CW - CCW	1
45	0303380	KNOB-UNDERLIFT (IN-OUT)	1
46	0303381	KNOB - UNDERLIFT (UP-DN)	1

ITEM	PART NUMBER	DESCRIPTION	QTY
47	0303391	HOSE 8AT2(8FJX-8FJ90) 110"	3
48	0303538	FITT, ADAPTER -BRASS 8FP-6MP	1
49	0303539	QUICK DISCONNECT 3/8 FPT	1
50	0303950	FITTING 45DEG DOT BRASS	1
51	0304363	QUICK DISCONNECT 1/2 FPT	2
52	0306537	EMERGENCY SWITCH	2
53	0306540	ROTARY SELECT SWITCH OPERATOR	12
54	0306870	HOSE HYDR - 96"	4
55	0306921	PIPE PLUG, 2" SQ HD	1
56	0307061	WINCH-35K dp 2-SP N.DRUM W/TEN	3
57	0307452	HOSE, HYD 146" LG	4
58	0307472	HOSE, HYD ASSY 24" LG	1
59	0307604	KNOB, RED LONG - SK0700-07	5
60	0310314	HOSE ASSY - 42" LG	4
61	0310456	PUSH BUTTN OPER W/MTG(RED) N/C	2
62	0310581	hose assy- 96" 8 fjx-10fjx90	4
63	0310637	PLUG, HOLE	2
64	0311191	ROLLER, POLY, 4" X 5/8"	2
65	0311305	T-BOLT CLAMP 1 3/8 TO 1 9/16	4
66	0311355	HOBBS HOURMETER	1
67	0311417	HOSE, 196" 3/8 2 X STRAIGHT	2
68	0311426	HOSE ASSY, 80" 4FJX-4FJX45	16
69	0311755	WATER SEPARATOR-MONNIER	1
70	0313129	HOSE, 1 SUCTION 16C4	34
71	0400005	SCREW, 6-32X1/2 PRH SS	6
72	0400012	LKWASHER, #8 SS	8
73	0400021	SCREW, 8-32X1/2 PRH SS	12
74	04000381	SS BHSCS 1/4-20 X 1	15
75	0400062	SCREW, 1/4-20X3/4 THC	3
76	0400066	SCREW, 1/4-20X3/4 HHC GR5	8
77	0400288	SCREW, 3/4-10X2-1/2 HHC GR8	16
78	0400307	SCREW, 7/8-9X4 HHC GR8	16
79	0400369	NUT, 1/4 SPR J	11
80	0400431	NUT, 3/4-10 LOK GR8	16
81	0400437	NUT, 7/8-9 LOK GR8	16
82	0400452	LKWASHER, 1/4	8
83	0400454	WASHER, 1/4 SS	2
84	0400473	WASHER, 7/8 PL GR8	16
85	0400489	WASHER, 3/4 SAE GR8	32
86	0400491	LKWASHER, 1/2	20
87	0400492	USS FLAT WASHER, 1/2	2
88	0400497	WASHER, 1/2 GR8	6
89	0400498	WASHER, 1/2X2X0.125	14
90	0400554	PIN, 3/8X1 SPR	3
91	0400900	NUT, 1/2-13 LOK JAM	2
92	0402020	SCREW, 1/4-20X3/4 HHC SS	2
93	0402021	SCREW, 1/4-20X1 HHC SS	13

ITEM	PART NUMBER	DESCRIPTION	QTY
94	0402044	SCREW, 3/8-16X1-1/2 HHC SS	8
95	0402080	WASHER, #8 SS	8
96	0402094	NUT, HEX 6-32 SS	6
97	0402110	WASHER, 1/4 SS	17
98	0402111	LKWASHER, 1/4 SS	30
99	0402113	NUT, 1/4-20 LOK SS	2
100	0402114	NUT, 1/4-20 LOK REV SS	11
101	0402120	WASHER, 3/8 SS	8
102	0402123	NUT, 3/8-16 LOK SS	8
103	07005922	MOUNT-HYD GAUGE	1
104	0712230	BOSS, TURNTABLE LOCK	4
105	0722104	ANGLE - WINCH MOUNTING	4
106	0724651	COVER	2
107	08005607	WINCH MOUNT, 35K FRONT	2
108	08005608	WINCH MOUNT, 35K REAR	2
109	0806994	HOUSE LOCK INDICATOR WELDMENT	4
110	0810433	HHU CHAIN ROLLER BRACKET, LH	1
111	0810434	HHU CHAIN ROLLER BRACKET, RH	1
112	09000097	ILLUMINATED LEGEND ASSY-LT UPP	1
113	09000135	ILLUMINATED LEGEND ASSY-RT UPP	1
114	09002247	CONTROL ASSY, 11 HANDLE WV	1
115	09002910	PUMP KIT, 4K KNEE BOOM	1
116	09002949	ILLUM LEGEND LT 1150 KNEE	1
117	09004266	U/L BOOM ASSEMBLY (SHORT)	1
118	09009470	SUBFRAME ASSY, 1140 RXP KB 12V	1
119	0906532	SWIVEL - BOOM ASSEMBLY	1
120	0908418	KIT-MUDFLAP CENTURY ROTATOR	1
121	0910231	BOOM ASSEMBLY 1140 (3-STAGE)	1
122	0910232	WRECKER FRAME ASSEMBLY - 1140	1
123	0910411	KIT - REAR OUTRGR 4-STG LG BOS	1
124	0910838	BUA '10 ROT AL BODY W/ XP TRI	1
125	0910935	XBAR ASY HRDWR-XHD 5X5 CENTURY	1
126	0911237	ILLUM LEGEND ASSY RH LWR WLV	1
127	0911324	RH CTL STATION ASSY 5 WINCH WV	1
128	0911804	AIR REGULATOR-GAUGE ASSEMBLY	4
129	24773017	HOSE ASSEMBLY 140"LG	2
130	24773018	HOSE ASSEMBLY 140"LG	2
131	9010520	FITTING-ELBOW 1/4T-1/4NPT	5
132	9024041	SWITCH, ROCKER SPST RED 12V21A	22
133	9041402	1/2 NC X 1 1/4 HHCS PLT GR8	6
134	9041403	1/2 NC X 1 1/2 HHCS PL GR8	14
135	9402970	TOOLBOX MTG. PAD	14
136	942480011	PLATE,SLOT-SS REAR WASHER TBOX	16
137	AWS-6821-A	HOSE ASSY-PRESSURE	10
138	FC41	FITTING-90DEG BLKHD ELB W/ NUT	8
139	HC1291	FITTING, 4MJ-4MB STR THR	16

09009128 BASIC UNIT ASSEMBLY 1140 RXP KNEEBOOM (cont'd)

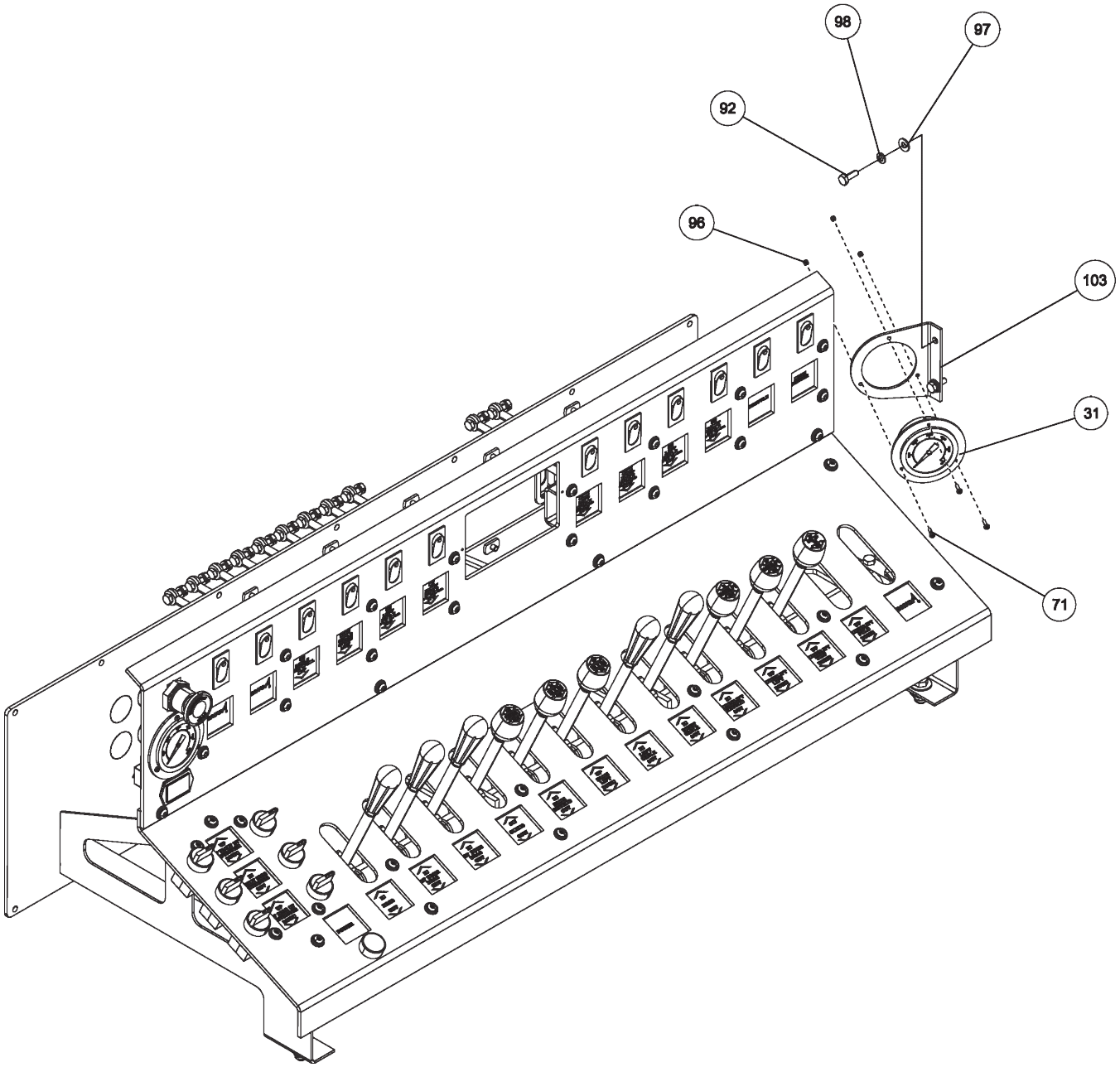

09009128 BASIC UNIT ASSEMBLY 1140 RXP KNEEBOOM (cont'd)

ITEM	PART NUMBER	DESCRIPTION	QTY
	09009128	BASIC UNIT ASSEMBLY 1140 RXP KB	
1	0300113	GREASE FITTING, 1/4-28 STR	1
2	03003419	HOSE, HYD 132" LG	1
3	03003420	HOSE, HYD 60" LG	1
4	03003421	HOSE, HYD 18"LG	3
5	03003424	HOSE, HYD 138"	1
6	03003425	HOSE, HYD 90" LG	4
7	03003426	HOSE, HYD 45" LG	6
8	0300364	CLAMP-HOSE,0.875"-2.75" 50"LBS	2
9	0300434	FITTING, HOSE BARB, 2	1
10	0300558	HOSE, SUCTION 2"ID 100R4 (C4)	1
11	0300835	KNOB-BOOM (UP-DOWN)	1
12	0300837	KNOB-BOOM (IN-OUT)	1
13	0300865	FITTING, CONNECTOR 8MJ-8MJ	5
14	0301113	HOSE HYD, 82"	2
15	0301207	HOSE HYD, 72"	4
16	0301377	FITTING, TEE,3/8" JIC	1
17	0301388	ELBOW, 8MJ-8MB90	3
18	0301422	FITTING, 6MJ-6MJ SMALL	4
19	0301473	HOSE HYD, 18" LG	2
20	0301522	ADAPTER, 6MJ-6MB	1
21	0301529	HOSE HYD, 58	2
22	03015922	STAUFF CLAMP, 3/8 TWIN	4
23	03016142	TUBE, HYD ASSY SF TO O/R	4
24	0301695	HOSE HYD, 91"	1
25	0301837	INLINE ORIFICE	4
26	0301909	RECEPTACLE BOOT	1
27	0301946	FITTING, BLKHD CONNECT	3
28	0301948	HD 7 WAY TRAILER CONNECT	1
29	0301961	BALL VALVE 2	1
30	0302056	HOSE HYD, 183"	5
31	0302205	GAUGE, FLUSH MNTG-6000 PSI	2
32	0302312	HOSE HYD, 43" LG 12G2AT	1
33	0302367	PIPE NIPPLE - 2 X 4	1
34	0302372	HOSE HYD, 240" LG	4
35	0302508	FITTING, ELL 8MJ-8MB 90LL	3
36	0302534	FITTING, 45 DEG ELBOW	2
37	0302604	HOSE HYD, 44"	2
38	0302632	HOSE HYD, 40"	8
39	0302805	HOSE HYD, 10"	1
40	0302856	KNOB-TILT, 3/8-16 THREAD	1
41	0302881	HOSE HYD, 45"	1
42	0303170	HOSE, HYD. 75"	1
43	0303340	HOSE HYD, 50" LG	1
44	0303379	KNOB, SWING CW - CCW	1
45	0303380	KNOB-UNDERLIFT (IN-OUT)	1
46	0303381	KNOB - UNDERLIFT (UP-DN)	1

ITEM	PART NUMBER	DESCRIPTION	QTY
47	0303391	HOSE 8AT2(8FJX-8FJ90) 110"	3
48	0303538	FITT, ADAPTER -BRASS 8FP-6MP	1
49	0303539	QUICK DISCONNECT 3/8 FPT	1
50	0303950	FITTING 45DEG DOT BRASS	1
51	0304363	QUICK DISCONNECT 1/2 FPT	2
52	0306537	EMERGENCY SWITCH	2
53	0306540	ROTARY SELECT SWITCH OPERATOR	12
54	0306870	HOSE HYDR - 96"	4
55	0306921	PIPE PLUG, 2" SQ HD	1
56	0307061	WINCH-35K dp 2-SP N.DRUM W/TEN	3
57	0307452	HOSE, HYD 146" LG	4
58	0307472	HOSE, HYD ASSY 24" LG	1
59	0307604	KNOB, RED LONG - SK0700-07	5
60	0310314	HOSE ASSY - 42" LG	4
61	0310456	PUSH BUTTN OPER W/MTG(RED) N/C	2
62	0310581	hose assy- 96" 8 fjx-10fjx90	4
63	0310637	PLUG, HOLE	2
64	0311191	ROLLER, POLY, 4" X 5/8"	2
65	0311305	T-BOLT CLAMP 1 3/8 TO 1 9/16	4
66	0311355	HOBBS HOURMETER	1
67	0311417	HOSE, 196" 3/8 2 X STRAIGHT	2
68	0311426	HOSE ASSY, 80" 4FJX-4FJX45	16
69	0311755	WATER SEPARATOR-MONNIER	1
70	0313129	HOSE, 1 SUCTION 16C4	34
71	0400005	SCREW, 6-32X1/2 PRH SS	6
72	0400012	LKWASHER, #8 SS	8
73	0400021	SCREW, 8-32X1/2 PRH SS	12
74	04000381	SS BHSCS 1/4-20 X 1	15
75	0400062	SCREW, 1/4-20X3/4 THC	3
76	0400066	SCREW, 1/4-20X3/4 HHC GR5	8
77	0400288	SCREW, 3/4-10X2-1/2 HHC GR8	16
78	0400307	SCREW, 7/8-9X4 HHC GR8	16
79	0400369	NUT, 1/4 SPR J	11
80	0400431	NUT, 3/4-10 LOK GR8	16
81	0400437	NUT, 7/8-9 LOK GR8	16
82	0400452	LKWASHER, 1/4	8
83	0400454	WASHER, 1/4 SS	2
84	0400473	WASHER, 7/8 PL GR8	16
85	0400489	WASHER, 3/4 SAE GR8	32
86	0400491	LKWASHER, 1/2	20
87	0400492	USS FLAT WASHER, 1/2	2
88	0400497	WASHER, 1/2 GR8	6
89	0400498	WASHER, 1/2X2X0.125	14
90	0400554	PIN, 3/8X1 SPR	3
91	0400900	NUT, 1/2-13 LOK JAM	2
92	0402020	SCREW, 1/4-20X3/4 HHC SS	2
93	0402021	SCREW, 1/4-20X1 HHC SS	13

ITEM	PART NUMBER	DESCRIPTION	QTY
94	0402044	SCREW, 3/8-16X1-1/2 HHC SS	8
95	0402080	WASHER, #8 SS	8
96	0402094	NUT, HEX 6-32 SS	6
97	0402110	WASHER, 1/4 SS	17
98	0402111	LKWASHER, 1/4 SS	30
99	0402113	NUT, 1/4-20 LOK SS	2
100	0402114	NUT, 1/4-20 LOK REV SS	11
101	0402120	WASHER, 3/8 SS	8
102	0402123	NUT, 3/8-16 LOK SS	8
103	07005922	MOUNT-HYD GAUGE	1
104	0712230	BOSS, TURNTABLE LOCK	4
105	0722104	ANGLE - WINCH MOUNTING	4
106	0724651	COVER	2
107	08005607	WINCH MOUNT, 35K FRONT	2
108	08005608	WINCH MOUNT, 35K REAR	2
109	0806994	HOUSE LOCK INDICATOR WELDMENT	4
110	0810433	HHU CHAIN ROLLER BRACKET, LH	1
111	0810434	HHU CHAIN ROLLER BRACKET, RH	1
112	09000097	ILLUMINATED LEGEND ASSY-LT UPP	1
113	09000135	ILLUMINATED LEGEND ASSY-RT UPP	1
114	09002247	CONTROL ASSY, 11 HANDLE WV	1
115	09002910	PUMP KIT, 4K KNEE BOOM	1
116	09002949	ILLUM LEGEND LT 1150 KNEE	1
117	09004266	U/L BOOM ASSEMBLY (SHORT)	1
118	09009470	SUBFRAME ASSY, 1140 RXP KB 12V	1
119	0906532	SWIVEL - BOOM ASSEMBLY	1
120	0908418	KIT-MUDFLAP CENTURY ROTATOR	1
121	0910231	BOOM ASSEMBLY 1140 (3-STAGE)	1
122	0910232	WRECKER FRAME ASSEMBLY - 1140	1
123	0910411	KIT - REAR OUTRGR 4-STG LG BOS	1
124	0910838	BUA '10 ROT AL BODY W/ XP TRI	1
125	0910935	XBAR ASY HRDWR-XHD 5X5 CENTURY	1
126	0911237	ILLUM LEGEND ASSY RH LWR WLV	1
127	0911324	RH CTL STATION ASSY 5 WINCH WV	1
128	0911804	AIR REGULATOR-GAUGE ASSEMBLY	4
129	24773017	HOSE ASSEMBLY 140"LG	2
130	24773018	HOSE ASSEMBLY 140"LG	2
131	9010520	FITTING-ELBOW 1/4T-1/4NPT	5
132	9024041	SWITCH, ROCKER SPST RED 12V21A	22
133	9041402	1/2 NC X 1 1/4 HHCS PLT GR8	6
134	9041403	1/2 NC X 1 1/2 HHCS PL GR8	14
135	9402970	TOOLBOX MTG. PAD	14
136	942480011	PLATE,SLOT-SS REAR WASHER TBOX	16
137	AWS-6821-A	HOSE ASSY-PRESSURE	10
138	FC41	FITTING-90DEG BLKHD ELB W/ NUT	8
139	HC1291	FITTING, 4MJ-4MB STR THR	16

09009128 BASIC UNIT ASSEMBLY 1140 RXP KNEEBOOM (cont'd)

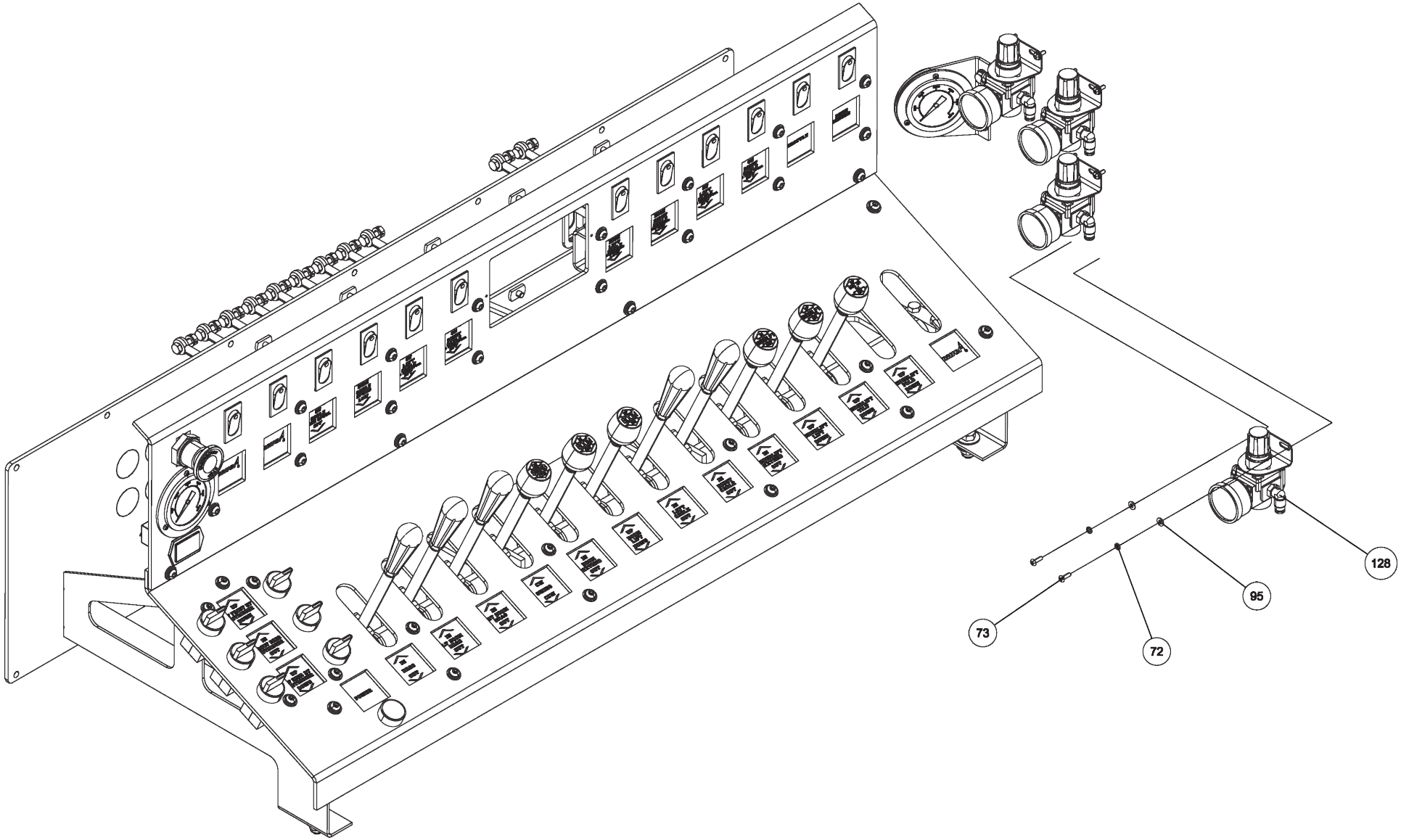

09009128 BASIC UNIT ASSEMBLY 1140 RXP KNEEBOOM (cont'd)

ITEM	PART NUMBER	DESCRIPTION	QTY
	09009128	BASIC UNIT ASSEMBLY 1140 RXP KB	
1	0300113	GREASE FITTING, 1/4-28 STR	1
2	03003419	HOSE, HYD 132" LG	1
3	03003420	HOSE, HYD 60" LG	1
4	03003421	HOSE, HYD 18"LG	3
5	03003424	HOSE, HYD 138"	1
6	03003425	HOSE, HYD 90" LG	4
7	03003426	HOSE, HYD 45" LG	6
8	0300364	CLAMP-HOSE,0.875"-2.75" 50"LBS	2
9	0300434	FITTING, HOSE BARB, 2	1
10	0300558	HOSE, SUCTION 2"ID 100R4 (C4)	1
11	0300835	KNOB-BOOM (UP-DOWN)	1
12	0300837	KNOB-BOOM (IN-OUT)	1
13	0300865	FITTING, CONNECTOR 8MJ-8MJ	5
14	0301113	HOSE HYD, 82"	2
15	0301207	HOSE HYD, 72"	4
16	0301377	FITTING, TEE,3/8" JIC	1
17	0301388	ELBOW, 8MJ-8MB90	3
18	0301422	FITTING, 6MJ-6MJ SMALL	4
19	0301473	HOSE HYD, 18" LG	2
20	0301522	ADAPTER, 6MJ-6MB	1
21	0301529	HOSE HYD, 58	2
22	03015922	STAUFF CLAMP, 3/8 TWIN	4
23	03016142	TUBE, HYD ASSY SF TO O/R	4
24	0301695	HOSE HYD, 91"	1
25	0301837	INLINE ORIFICE	4
26	0301909	RECEPTACLE BOOT	1
27	0301946	FITTING, BLKHD CONNECT	3
28	0301948	HD 7 WAY TRAILER CONNECT	1
29	0301961	BALL VALVE 2	1
30	0302056	HOSE HYD, 183"	5
31	0302205	GAUGE, FLUSH MNTG-6000 PSI	2
32	0302312	HOSE HYD, 43" LG 12G2AT	1
33	0302367	PIPE NIPPLE - 2 X 4	1
34	0302372	HOSE HYD, 240" LG	4
35	0302508	FITTING, ELL 8MJ-8MB 90LL	3
36	0302534	FITTING, 45 DEG ELBOW	2
37	0302604	HOSE HYD, 44"	2
38	0302632	HOSE HYD, 40"	8
39	0302805	HOSE HYD, 10"	1
40	0302856	KNOB-TILT, 3/8-16 THREAD	1
41	0302881	HOSE HYD, 45"	1
42	0303170	HOSE, HYD. 75"	1
43	0303340	HOSE HYD, 50" LG	1
44	0303379	KNOB, SWING CW - CCW	1
45	0303380	KNOB-UNDERLIFT (IN-OUT)	1
46	0303381	KNOB - UNDERLIFT (UP-DN)	1

ITEM	PART NUMBER	DESCRIPTION	QTY
47	0303391	HOSE 8AT2(8FJX-8FJ90) 110"	3
48	0303538	FITT, ADAPTER -BRASS 8FP-6MP	1
49	0303539	QUICK DISCONNECT 3/8 FPT	1
50	0303950	FITTING 45DEG DOT BRASS	1
51	0304363	QUICK DISCONNECT 1/2 FPT	2
52	0306537	EMERGENCY SWITCH	2
53	0306540	ROTARY SELECT SWITCH OPERATOR	12
54	0306870	HOSE HYDR - 96"	4
55	0306921	PIPE PLUG, 2" SQ HD	1
56	0307061	WINCH-35K dp 2-SP N.DRUM W/TEN	3
57	0307452	HOSE, HYD 146" LG	4
58	0307472	HOSE, HYD ASSY 24" LG	1
59	0307604	KNOB, RED LONG - SK0700-07	5
60	0310314	HOSE ASSY - 42" LG	4
61	0310456	PUSH BUTTN OPER W/MTG(RED) N/C	2
62	0310581	hose assy- 96" 8 fjx-10fjx90	4
63	0310637	PLUG, HOLE	2
64	0311191	ROLLER, POLY, 4" X 5/8"	2
65	0311305	T-BOLT CLAMP 1 3/8 TO 1 9/16	4
66	0311355	HOBBS HOURMETER	1
67	0311417	HOSE, 196" 3/8 2 X STRAIGHT	2
68	0311426	HOSE ASSY, 80" 4FJX-4FJX45	16
69	0311755	WATER SEPARATOR-MONNIER	1
70	0313129	HOSE, 1 SUCTION 16C4	34
71	0400005	SCREW, 6-32X1/2 PRH SS	6
72	0400012	LKWASHER, #8 SS	8
73	0400021	SCREW, 8-32X1/2 PRH SS	12
74	04000381	SS BHSCS 1/4-20 X 1	15
75	0400062	SCREW, 1/4-20X3/4 THC	3
76	0400066	SCREW, 1/4-20X3/4 HHC GR5	8
77	0400288	SCREW, 3/4-10X2-1/2 HHC GR8	16
78	0400307	SCREW, 7/8-9X4 HHC GR8	16
79	0400369	NUT, 1/4 SPR J	11
80	0400431	NUT, 3/4-10 LOK GR8	16
81	0400437	NUT, 7/8-9 LOK GR8	16
82	0400452	LKWASHER, 1/4	8
83	0400454	WASHER, 1/4 SS	2
84	0400473	WASHER, 7/8 PL GR8	16
85	0400489	WASHER, 3/4 SAE GR8	32
86	0400491	LKWASHER, 1/2	20
87	0400492	USS FLAT WASHER, 1/2	2
88	0400497	WASHER, 1/2 GR8	6
89	0400498	WASHER, 1/2X2X0.125	14
90	0400554	PIN, 3/8X1 SPR	3
91	0400900	NUT, 1/2-13 LOK JAM	2
92	0402020	SCREW, 1/4-20X3/4 HHC SS	2
93	0402021	SCREW, 1/4-20X1 HHC SS	13

ITEM	PART NUMBER	DESCRIPTION	QTY
94	0402044	SCREW, 3/8-16X1-1/2 HHC SS	8
95	0402080	WASHER, #8 SS	8
96	0402094	NUT, HEX 6-32 SS	6
97	0402110	WASHER, 1/4 SS	17
98	0402111	LKWASHER, 1/4 SS	30
99	0402113	NUT, 1/4-20 LOK SS	2
100	0402114	NUT, 1/4-20 LOK REV SS	11
101	0402120	WASHER, 3/8 SS	8
102	0402123	NUT, 3/8-16 LOK SS	8
103	07005922	MOUNT-HYD GAUGE	1
104	0712230	BOSS, TURNTABLE LOCK	4
105	0722104	ANGLE - WINCH MOUNTING	4
106	0724651	COVER	2
107	08005607	WINCH MOUNT, 35K FRONT	2
108	08005608	WINCH MOUNT, 35K REAR	2
109	0806994	HOUSE LOCK INDICATOR WELDMENT	4
110	0810433	HHU CHAIN ROLLER BRACKET, LH	1
111	0810434	HHU CHAIN ROLLER BRACKET, RH	1
112	09000097	ILLUMINATED LEGEND ASSY-LT UPP	1
113	09000135	ILLUMINATED LEGEND ASSY-RT UPP	1
114	09002247	CONTROL ASSY, 11 HANDLE WV	1
115	09002910	PUMP KIT, 4K KNEE BOOM	1
116	09002949	ILLUM LEGEND LT 1150 KNEE	1
117	09004266	U/L BOOM ASSEMBLY (SHORT)	1
118	09009470	SUBFRAME ASSY, 1140 RXP KB 12V	1
119	0906532	SWIVEL - BOOM ASSEMBLY	1
120	0908418	KIT-MUDFLAP CENTURY ROTATOR	1
121	0910231	BOOM ASSEMBLY 1140 (3-STAGE)	1
122	0910232	WRECKER FRAME ASSEMBLY - 1140	1
123	0910411	KIT - REAR OUTRGR 4-STG LG BOS	1
124	0910838	BUA '10 ROT AL BODY W/ XP TRI	1
125	0910935	XBAR ASY HRDWR-XHD 5X5 CENTURY	1
126	0911237	ILLUM LEGEND ASSY RH LWR WLV	1
127	0911324	RH CTL STATION ASSY 5 WINCH WV	1
128	0911804	AIR REGULATOR-GAUGE ASSEMBLY	4
129	24773017	HOSE ASSEMBLY 140"LG	2
130	24773018	HOSE ASSEMBLY 140"LG	2
131	9010520	FITTING-ELBOW 1/4T-1/4NPT	5
132	9024041	SWITCH, ROCKER SPST RED 12V21A	22
133	9041402	1/2 NC X 1 1/4 HHCS PLT GR8	6
134	9041403	1/2 NC X 1 1/2 HHCS PL GR8	14
135	9402970	TOOLBOX MTG. PAD	14
136	942480011	PLATE,SLOT-SS REAR WASHER TBOX	16
137	AWS-6821-A	HOSE ASSY-PRESSURE	10
138	FC41	FITTING-90DEG BLKHD ELB W/ NUT	8
139	HC1291	FITTING, 4MJ-4MB STR THR	16

09009128 BASIC UNIT ASSEMBLY 1140 RXP KNEEBOOM (cont'd)

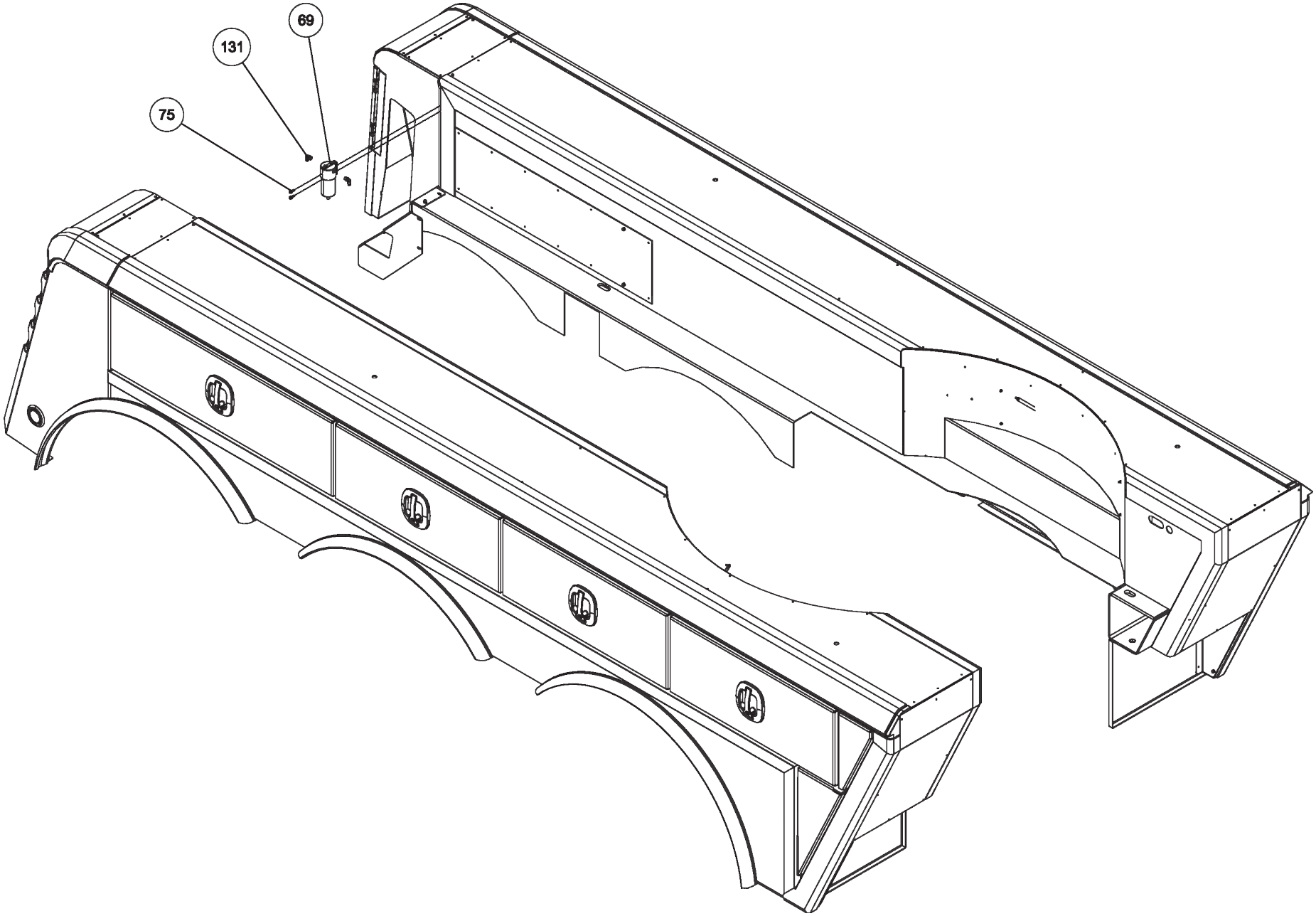

09009128 BASIC UNIT ASSEMBLY 1140 RXP KNEEBOOM (cont'd)

ITEM	PART NUMBER	DESCRIPTION	QTY
	09009128	BASIC UNIT ASSEMBLY 1140 RXP KB	
1	0300113	GREASE FITTING, 1/4-28 STR	1
2	03003419	HOSE, HYD 132" LG	1
3	03003420	HOSE, HYD 60" LG	1
4	03003421	HOSE, HYD 18"LG	3
5	03003424	HOSE, HYD 138"	1
6	03003425	HOSE, HYD 90" LG	4
7	03003426	HOSE, HYD 45" LG	6
8	0300364	CLAMP-HOSE,0.875"-2.75" 50"LBS	2
9	0300434	FITTING, HOSE BARB, 2	1
10	0300558	HOSE, SUCTION 2"ID 100R4 (C4)	1
11	0300835	KNOB-BOOM (UP-DOWN)	1
12	0300837	KNOB-BOOM (IN-OUT)	1
13	0300865	FITTING, CONNECTOR 8MJ-8MJ	5
14	0301113	HOSE HYD, 82"	2
15	0301207	HOSE HYD, 72"	4
16	0301377	FITTING, TEE,3/8" JIC	1
17	0301388	ELBOW, 8MJ-8MB90	3
18	0301422	FITTING, 6MJ-6MJ SMALL	4
19	0301473	HOSE HYD, 18" LG	2
20	0301522	ADAPTER, 6MJ-6MB	1
21	0301529	HOSE HYD, 58	2
22	03015922	STAUFF CLAMP, 3/8 TWIN	4
23	03016142	TUBE, HYD ASSY SF TO O/R	4
24	0301695	HOSE HYD, 91"	1
25	0301837	INLINE ORIFICE	4
26	0301909	RECEPTACLE BOOT	1
27	0301946	FITTING, BLKHD CONNECT	3
28	0301948	HD 7 WAY TRAILER CONNECT	1
29	0301961	BALL VALVE 2	1
30	0302056	HOSE HYD, 183"	5
31	0302205	GAUGE, FLUSH MNTG-6000 PSI	2
32	0302312	HOSE HYD, 43" LG 12G2AT	1
33	0302367	PIPE NIPPLE - 2 X 4	1
34	0302372	HOSE HYD, 240" LG	4
35	0302508	FITTING, ELL 8MJ-8MB 90LL	3
36	0302534	FITTING, 45 DEG ELBOW	2
37	0302604	HOSE HYD, 44"	2
38	0302632	HOSE HYD, 40"	8
39	0302805	HOSE HYD, 10"	1
40	0302856	KNOB-TILT, 3/8-16 THREAD	1
41	0302881	HOSE HYD, 45"	1
42	0303170	HOSE, HYD. 75"	1
43	0303340	HOSE HYD, 50" LG	1
44	0303379	KNOB, SWING CW - CCW	1
45	0303380	KNOB-UNDERLIFT (IN-OUT)	1
46	0303381	KNOB - UNDERLIFT (UP-DN)	1

ITEM	PART NUMBER	DESCRIPTION	QTY
47	0303391	HOSE 8AT2(8FJX-8FJ90) 110"	3
48	0303538	FITT, ADAPTER -BRASS 8FP-6MP	1
49	0303539	QUICK DISCONNECT 3/8 FPT	1
50	0303950	FITTING 45DEG DOT BRASS	1
51	0304363	QUICK DISCONNECT 1/2 FPT	2
52	0306537	EMERGENCY SWITCH	2
53	0306540	ROTARY SELECT SWITCH OPERATOR	12
54	0306870	HOSE HYDR - 96"	4
55	0306921	PIPE PLUG, 2" SQ HD	1
56	0307061	WINCH-35K dp 2-SP N.DRUM W/TEN	3
57	0307452	HOSE, HYD 146" LG	4
58	0307472	HOSE, HYD ASSY 24" LG	1
59	0307604	KNOB, RED LONG - SK0700-07	5
60	0310314	HOSE ASSY - 42" LG	4
61	0310456	PUSH BUTTN OPER W/MTG(RED) N/C	2
62	0310581	hose assy- 96" 8 fjx-10fjx90	4
63	0310637	PLUG, HOLE	2
64	0311191	ROLLER, POLY, 4" X 5/8"	2
65	0311305	T-BOLT CLAMP 1 3/8 TO 1 9/16	4
66	0311355	HOBBS HOURMETER	1
67	0311417	HOSE, 196" 3/8 2 X STRAIGHT	2
68	0311426	HOSE ASSY, 80" 4FJX-4FJX45	16
69	0311755	WATER SEPARATOR-MONNIER	1
70	0313129	HOSE, 1 SUCTION 16C4	34
71	0400005	SCREW, 6-32X1/2 PRH SS	6
72	0400012	LKWASHER, #8 SS	8
73	0400021	SCREW, 8-32X1/2 PRH SS	12
74	04000381	SS BHSCS 1/4-20 X 1	15
75	0400062	SCREW, 1/4-20X3/4 THC	3
76	0400066	SCREW, 1/4-20X3/4 HHC GR5	8
77	0400288	SCREW, 3/4-10X2-1/2 HHC GR8	16
78	0400307	SCREW, 7/8-9X4 HHC GR8	16
79	0400369	NUT, 1/4 SPR J	11
80	0400431	NUT, 3/4-10 LOK GR8	16
81	0400437	NUT, 7/8-9 LOK GR8	16
82	0400452	LKWASHER, 1/4	8
83	0400454	WASHER, 1/4 SS	2
84	0400473	WASHER, 7/8 PL GR8	16
85	0400489	WASHER, 3/4 SAE GR8	32
86	0400491	LKWASHER, 1/2	20
87	0400492	USS FLAT WASHER, 1/2	2
88	0400497	WASHER, 1/2 GR8	6
89	0400498	WASHER, 1/2X2X0.125	14
90	0400554	PIN, 3/8X1 SPR	3
91	0400900	NUT, 1/2-13 LOK JAM	2
92	0402020	SCREW, 1/4-20X3/4 HHC SS	2
93	0402021	SCREW, 1/4-20X1 HHC SS	13

ITEM	PART NUMBER	DESCRIPTION	QTY
94	0402044	SCREW, 3/8-16X1-1/2 HHC SS	8
95	0402080	WASHER, #8 SS	8
96	0402094	NUT, HEX 6-32 SS	6
97	0402110	WASHER, 1/4 SS	17
98	0402111	LKWASHER, 1/4 SS	30
99	0402113	NUT, 1/4-20 LOK SS	2
100	0402114	NUT, 1/4-20 LOK REV SS	11
101	0402120	WASHER, 3/8 SS	8
102	0402123	NUT, 3/8-16 LOK SS	8
103	07005922	MOUNT-HYD GAUGE	1
104	0712230	BOSS, TURNTABLE LOCK	4
105	0722104	ANGLE - WINCH MOUNTING	4
106	0724651	COVER	2
107	08005607	WINCH MOUNT, 35K FRONT	2
108	08005608	WINCH MOUNT, 35K REAR	2
109	0806994	HOUSE LOCK INDICATOR WELDMENT	4
110	0810433	HHU CHAIN ROLLER BRACKET, LH	1
111	0810434	HHU CHAIN ROLLER BRACKET, RH	1
112	09000097	ILLUMINATED LEGEND ASSY-LT UPP	1
113	09000135	ILLUMINATED LEGEND ASSY-RT UPP	1
114	09002247	CONTROL ASSY, 11 HANDLE WV	1
115	09002910	PUMP KIT, 4K KNEE BOOM	1
116	09002949	ILLUM LEGEND LT 1150 KNEE	1
117	09004266	U/L BOOM ASSEMBLY (SHORT)	1
118	09009470	SUBFRAME ASSY, 1140 RXP KB 12V	1
119	0906532	SWIVEL - BOOM ASSEMBLY	1
120	0908418	KIT-MUDFLAP CENTURY ROTATOR	1
121	0910231	BOOM ASSEMBLY 1140 (3-STAGE)	1
122	0910232	WRECKER FRAME ASSEMBLY - 1140	1
123	0910411	KIT - REAR OUTRGR 4-STG LG BOS	1
124	0910838	BUA '10 ROT AL BODY W/ XP TRI	1
125	0910935	XBAR ASY HRDWR-XHD 5X5 CENTURY	1
126	0911237	ILLUM LEGEND ASSY RH LWR WLV	1
127	0911324	RH CTL STATION ASSY 5 WINCH WV	1
128	0911804	AIR REGULATOR-GAUGE ASSEMBLY	4
129	24773017	HOSE ASSEMBLY 140"LG	2
130	24773018	HOSE ASSEMBLY 140"LG	2
131	9010520	FITTING-ELBOW 1/4T-1/4NPT	5
132	9024041	SWITCH, ROCKER SPST RED 12V21A	22
133	9041402	1/2 NC X 1 1/4 HHCS PLT GR8	6
134	9041403	1/2 NC X 1 1/2 HHCS PL GR8	14
135	9402970	TOOLBOX MTG. PAD	14
136	942480011	PLATE,SLOT-SS REAR WASHER TBOX	16
137	AWS-6821-A	HOSE ASSY-PRESSURE	10
138	FC41	FITTING-90DEG BLKHD ELB W/ NUT	8
139	HC1291	FITTING, 4MJ-4MB STR THR	16

09009128 BASIC UNIT ASSEMBLY 1140 RXP KNEEBOOM (cont'd)

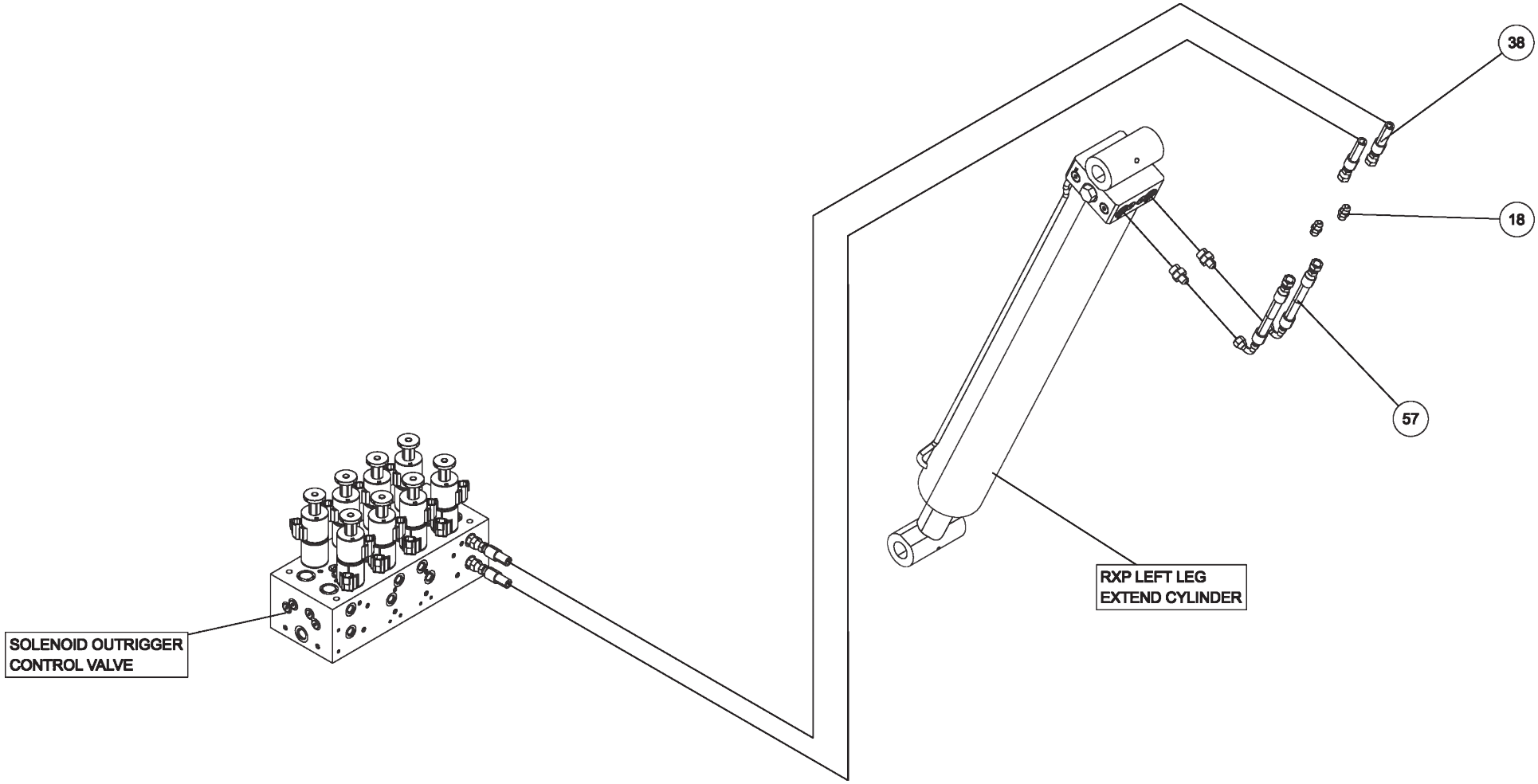

09009128 BASIC UNIT ASSEMBLY 1140 RXP KNEEBOOM (cont'd)

ITEM	PART NUMBER	DESCRIPTION	QTY
	09009128	BASIC UNIT ASSEMBLY 1140 RXP KB	
1	0300113	GREASE FITTING, 1/4-28 STR	1
2	03003419	HOSE, HYD 132" LG	1
3	03003420	HOSE, HYD 60" LG	1
4	03003421	HOSE, HYD 18"LG	3
5	03003424	HOSE, HYD 138"	1
6	03003425	HOSE, HYD 90" LG	4
7	03003426	HOSE, HYD 45" LG	6
8	0300364	CLAMP-HOSE,0.875"-2.75" 50"LBS	2
9	0300434	FITTING, HOSE BARB, 2	1
10	0300558	HOSE, SUCTION 2"ID 100R4 (C4)	1
11	0300835	KNOB-BOOM (UP-DOWN)	1
12	0300837	KNOB-BOOM (IN-OUT)	1
13	0300865	FITTING, CONNECTOR 8MJ-8MJ	5
14	0301113	HOSE HYD, 82"	2
15	0301207	HOSE HYD, 72"	4
16	0301377	FITTING, TEE,3/8" JIC	1
17	0301388	ELBOW, 8MJ-8MB90	3
18	0301422	FITTING, 6MJ-6MJ SMALL	4
19	0301473	HOSE HYD, 18" LG	2
20	0301522	ADAPTER, 6MJ-6MB	1
21	0301529	HOSE HYD, 58	2
22	03015922	STAUFF CLAMP, 3/8 TWIN	4
23	03016142	TUBE, HYD ASSY SF TO O/R	4
24	0301695	HOSE HYD, 91"	1
25	0301837	INLINE ORIFICE	4
26	0301909	RECEPTACLE BOOT	1
27	0301946	FITTING, BLKHD CONNECT	3
28	0301948	HD 7 WAY TRAILER CONNECT	1
29	0301961	BALL VALVE 2	1
30	0302056	HOSE HYD, 183"	5
31	0302205	GAUGE, FLUSH MNTG-6000 PSI	2
32	0302312	HOSE HYD, 43" LG 12G2AT	1
33	0302367	PIPE NIPPLE - 2 X 4	1
34	0302372	HOSE HYD, 240" LG	4
35	0302508	FITTING, ELL 8MJ-8MB 90LL	3
36	0302534	FITTING, 45 DEG ELBOW	2
37	0302604	HOSE HYD, 44"	2
38	0302632	HOSE HYD, 40"	8
39	0302805	HOSE HYD, 10"	1
40	0302856	KNOB-TILT, 3/8-16 THREAD	1
41	0302881	HOSE HYD, 45"	1
42	0303170	HOSE, HYD. 75"	1
43	0303340	HOSE HYD, 50" LG	1
44	0303379	KNOB, SWING CW - CCW	1
45	0303380	KNOB-UNDERLIFT (IN-OUT)	1
46	0303381	KNOB - UNDERLIFT (UP-DN)	1

ITEM	PART NUMBER	DESCRIPTION	QTY
47	0303391	HOSE 8AT2(8FJX-8FJ90) 110"	3
48	0303538	FITT, ADAPTER -BRASS 8FP-6MP	1
49	0303539	QUICK DISCONNECT 3/8 FPT	1
50	0303950	FITTING 45DEG DOT BRASS	1
51	0304363	QUICK DISCONNECT 1/2 FPT	2
52	0306537	EMERGENCY SWITCH	2
53	0306540	ROTARY SELECT SWITCH OPERATOR	12
54	0306870	HOSE HYDR - 96"	4
55	0306921	PIPE PLUG, 2" SQ HD	1
56	0307061	WINCH-35K dp 2-SP N.DRUM W/TEN	3
57	0307452	HOSE, HYD 146" LG	4
58	0307472	HOSE, HYD ASSY 24" LG	1
59	0307604	KNOB, RED LONG - SK0700-07	5
60	0310314	HOSE ASSY - 42" LG	4
61	0310456	PUSH BUTTN OPER W/MTG(RED) N/C	2
62	0310581	hose assy- 96" 8 fjx-10fjx90	4
63	0310637	PLUG, HOLE	2
64	0311191	ROLLER, POLY, 4" X 5/8"	2
65	0311305	T-BOLT CLAMP 1 3/8 TO 1 9/16	4
66	0311355	HOBBS HOURMETER	1
67	0311417	HOSE, 196" 3/8 2 X STRAIGHT	2
68	0311426	HOSE ASSY, 80" 4FJX-4FJX45	16
69	0311755	WATER SEPARATOR-MONNIER	1
70	0313129	HOSE, 1 SUCTION 16C4	34
71	0400005	SCREW, 6-32X1/2 PRH SS	6
72	0400012	LKWASHER, #8 SS	8
73	0400021	SCREW, 8-32X1/2 PRH SS	12
74	04000381	SS BHSCS 1/4-20 X 1	15
75	0400062	SCREW, 1/4-20X3/4 THC	3
76	0400066	SCREW, 1/4-20X3/4 HHC GR5	8
77	0400288	SCREW, 3/4-10X2-1/2 HHC GR8	16
78	0400307	SCREW, 7/8-9X4 HHC GR8	16
79	0400369	NUT, 1/4 SPR J	11
80	0400431	NUT, 3/4-10 LOK GR8	16
81	0400437	NUT, 7/8-9 LOK GR8	16
82	0400452	LKWASHER, 1/4	8
83	0400454	WASHER, 1/4 SS	2
84	0400473	WASHER, 7/8 PL GR8	16
85	0400489	WASHER, 3/4 SAE GR8	32
86	0400491	LKWASHER, 1/2	20
87	0400492	USS FLAT WASHER, 1/2	2
88	0400497	WASHER, 1/2 GR8	6
89	0400498	WASHER, 1/2X2X0.125	14
90	0400554	PIN, 3/8X1 SPR	3
91	0400900	NUT, 1/2-13 LOK JAM	2
92	0402020	SCREW, 1/4-20X3/4 HHC SS	2
93	0402021	SCREW, 1/4-20X1 HHC SS	13

ITEM	PART NUMBER	DESCRIPTION	QTY
94	0402044	SCREW, 3/8-16X1-1/2 HHC SS	8
95	0402080	WASHER, #8 SS	8
96	0402094	NUT, HEX 6-32 SS	6
97	0402110	WASHER, 1/4 SS	17
98	0402111	LKWASHER, 1/4 SS	30
99	0402113	NUT, 1/4-20 LOK SS	2
100	0402114	NUT, 1/4-20 LOK REV SS	11
101	0402120	WASHER, 3/8 SS	8
102	0402123	NUT, 3/8-16 LOK SS	8
103	07005922	MOUNT-HYD GAUGE	1
104	0712230	BOSS, TURNTABLE LOCK	4
105	0722104	ANGLE - WINCH MOUNTING	4
106	0724651	COVER	2
107	08005607	WINCH MOUNT, 35K FRONT	2
108	08005608	WINCH MOUNT, 35K REAR	2
109	0806994	HOUSE LOCK INDICATOR WELDMENT	4
110	0810433	HHU CHAIN ROLLER BRACKET, LH	1
111	0810434	HHU CHAIN ROLLER BRACKET, RH	1
112	09000097	ILLUMINATED LEGEND ASSY-LT UPP	1
113	09000135	ILLUMINATED LEGEND ASSY-RT UPP	1
114	09002247	CONTROL ASSY, 11 HANDLE WV	1
115	09002910	PUMP KIT, 4K KNEE BOOM	1
116	09002949	ILLUM LEGEND LT 1150 KNEE	1
117	09004266	U/L BOOM ASSEMBLY (SHORT)	1
118	09009470	SUBFRAME ASSY, 1140 RXP KB 12V	1
119	0906532	SWIVEL - BOOM ASSEMBLY	1
120	0908418	KIT-MUDFLAP CENTURY ROTATOR	1
121	0910231	BOOM ASSEMBLY 1140 (3-STAGE)	1
122	0910232	WRECKER FRAME ASSEMBLY - 1140	1
123	0910411	KIT - REAR OUTRGR 4-STG LG BOS	1
124	0910838	BUA '10 ROT AL BODY W/ XP TRI	1
125	0910935	XBAR ASY HRDWR-XHD 5X5 CENTURY	1
126	0911237	ILLUM LEGEND ASSY RH LWR WLV	1
127	0911324	RH CTL STATION ASSY 5 WINCH WV	1
128	0911804	AIR REGULATOR-GAUGE ASSEMBLY	4
129	24773017	HOSE ASSEMBLY 140"LG	2
130	24773018	HOSE ASSEMBLY 140"LG	2
131	9010520	FITTING-ELBOW 1/4T-1/4NPT	5
132	9024041	SWITCH, ROCKER SPST RED 12V21A	22
133	9041402	1/2 NC X 1 1/4 HHCS PLT GR8	6
134	9041403	1/2 NC X 1 1/2 HHCS PL GR8	14
135	9402970	TOOLBOX MTG. PAD	14
136	942480011	PLATE,SLOT-SS REAR WASHER TBOX	16
137	AWS-6821-A	HOSE ASSY-PRESSURE	10
138	FC41	FITTING-90DEG BLKHD ELB W/ NUT	8
139	HC1291	FITTING, 4MJ-4MB STR THR	16

09009128 BASIC UNIT ASSEMBLY 1140 RXP KNEEBOOM (cont'd)

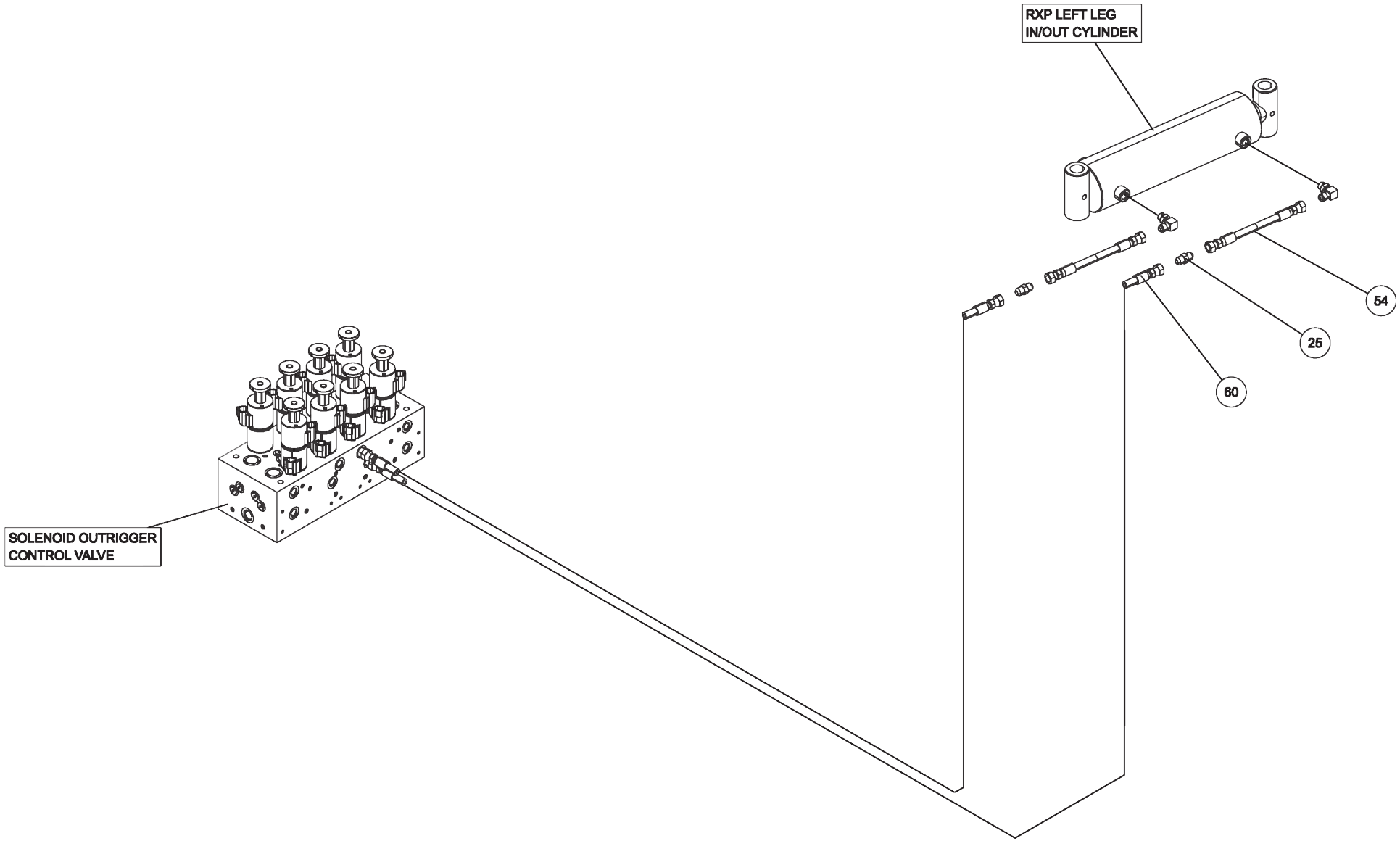

09009128 BASIC UNIT ASSEMBLY 1140 RXP KNEEBOOM (cont'd)

ITEM	PART NUMBER	DESCRIPTION	QTY
	09009128	BASIC UNIT ASSEMBLY 1140 RXP KB	
1	0300113	GREASE FITTING, 1/4-28 STR	1
2	03003419	HOSE, HYD 132" LG	1
3	03003420	HOSE, HYD 60" LG	1
4	03003421	HOSE, HYD 18"LG	3
5	03003424	HOSE, HYD 138"	1
6	03003425	HOSE, HYD 90" LG	4
7	03003426	HOSE, HYD 45" LG	6
8	0300364	CLAMP-HOSE,0.875"-2.75" 50"LBS	2
9	0300434	FITTING, HOSE BARB, 2	1
10	0300558	HOSE, SUCTION 2"ID 100R4 (C4)	1
11	0300835	KNOB-BOOM (UP-DOWN)	1
12	0300837	KNOB-BOOM (IN-OUT)	1
13	0300865	FITTING, CONNECTOR 8MJ-8MJ	5
14	0301113	HOSE HYD, 82"	2
15	0301207	HOSE HYD, 72"	4
16	0301377	FITTING, TEE,3/8" JIC	1
17	0301388	ELBOW, 8MJ-8MB90	3
18	0301422	FITTING, 6MJ-6MJ SMALL	4
19	0301473	HOSE HYD, 18" LG	2
20	0301522	ADAPTER, 6MJ-6MB	1
21	0301529	HOSE HYD, 58	2
22	03015922	STAUFF CLAMP, 3/8 TWIN	4
23	03016142	TUBE, HYD ASSY SF TO O/R	4
24	0301695	HOSE HYD, 91"	1
25	0301837	INLINE ORIFICE	4
26	0301909	RECEPTACLE BOOT	1
27	0301946	FITTING, BLKHD CONNECT	3
28	0301948	HD 7 WAY TRAILER CONNECT	1
29	0301961	BALL VALVE 2	1
30	0302056	HOSE HYD, 183"	5
31	0302205	GAUGE, FLUSH MNTG-6000 PSI	2
32	0302312	HOSE HYD, 43" LG 12G2AT	1
33	0302367	PIPE NIPPLE - 2 X 4	1
34	0302372	HOSE HYD, 240" LG	4
35	0302508	FITTING, ELL 8MJ-8MB 90LL	3
36	0302534	FITTING, 45 DEG ELBOW	2
37	0302604	HOSE HYD, 44"	2
38	0302632	HOSE HYD, 40"	8
39	0302805	HOSE HYD, 10"	1
40	0302856	KNOB-TILT, 3/8-16 THREAD	1
41	0302881	HOSE HYD, 45"	1
42	0303170	HOSE, HYD. 75"	1
43	0303340	HOSE HYD, 50" LG	1
44	0303379	KNOB, SWING CW - CCW	1
45	0303380	KNOB-UNDERLIFT (IN-OUT)	1
46	0303381	KNOB - UNDERLIFT (UP-DN)	1

ITEM	PART NUMBER	DESCRIPTION	QTY
47	0303391	HOSE 8AT2(8FJX-8FJ90) 110"	3
48	0303538	FITT, ADAPTER -BRASS 8FP-6MP	1
49	0303539	QUICK DISCONNECT 3/8 FPT	1
50	0303950	FITTING 45DEG DOT BRASS	1
51	0304363	QUICK DISCONNECT 1/2 FPT	2
52	0306537	EMERGENCY SWITCH	2
53	0306540	ROTARY SELECT SWITCH OPERATOR	12
54	0306870	HOSE HYDR - 96"	4
55	0306921	PIPE PLUG, 2" SQ HD	1
56	0307061	WINCH-35K dp 2-SP N.DRUM W/TEN	3
57	0307452	HOSE, HYD 146" LG	4
58	0307472	HOSE, HYD ASSY 24" LG	1
59	0307604	KNOB, RED LONG - SK0700-07	5
60	0310314	HOSE ASSY - 42" LG	4
61	0310456	PUSH BUTTN OPER W/MTG(RED) N/C	2
62	0310581	hose assy- 96" 8 fjx-10fjx90	4
63	0310637	PLUG, HOLE	2
64	0311191	ROLLER, POLY, 4" X 5/8"	2
65	0311305	T-BOLT CLAMP 1 3/8 TO 1 9/16	4
66	0311355	HOBBS HOURMETER	1
67	0311417	HOSE, 196" 3/8 2 X STRAIGHT	2
68	0311426	HOSE ASSY, 80" 4FJX-4FJX45	16
69	0311755	WATER SEPARATOR-MONNIER	1
70	0313129	HOSE, 1 SUCTION 16C4	34
71	0400005	SCREW, 6-32X1/2 PRH SS	6
72	0400012	LKWASHER, #8 SS	8
73	0400021	SCREW, 8-32X1/2 PRH SS	12
74	04000381	SS BHSCS 1/4-20 X 1	15
75	0400062	SCREW, 1/4-20X3/4 THC	3
76	0400066	SCREW, 1/4-20X3/4 HHC GR5	8
77	0400288	SCREW, 3/4-10X2-1/2 HHC GR8	16
78	0400307	SCREW, 7/8-9X4 HHC GR8	16
79	0400369	NUT, 1/4 SPR J	11
80	0400431	NUT, 3/4-10 LOK GR8	16
81	0400437	NUT, 7/8-9 LOK GR8	16
82	0400452	LKWASHER, 1/4	8
83	0400454	WASHER, 1/4 SS	2
84	0400473	WASHER, 7/8 PL GR8	16
85	0400489	WASHER, 3/4 SAE GR8	32
86	0400491	LKWASHER, 1/2	20
87	0400492	USS FLAT WASHER, 1/2	2
88	0400497	WASHER, 1/2 GR8	6
89	0400498	WASHER, 1/2X2X0.125	14
90	0400554	PIN, 3/8X1 SPR	3
91	0400900	NUT, 1/2-13 LOK JAM	2
92	0402020	SCREW, 1/4-20X3/4 HHC SS	2
93	0402021	SCREW, 1/4-20X1 HHC SS	13

ITEM	PART NUMBER	DESCRIPTION	QTY
94	0402044	SCREW, 3/8-16X1-1/2 HHC SS	8
95	0402080	WASHER, #8 SS	8
96	0402094	NUT, HEX 6-32 SS	6
97	0402110	WASHER, 1/4 SS	17
98	0402111	LKWASHER, 1/4 SS	30
99	0402113	NUT, 1/4-20 LOK SS	2
100	0402114	NUT, 1/4-20 LOK REV SS	11
101	0402120	WASHER, 3/8 SS	8
102	0402123	NUT, 3/8-16 LOK SS	8
103	07005922	MOUNT-HYD GAUGE	1
104	0712230	BOSS, TURNTABLE LOCK	4
105	0722104	ANGLE - WINCH MOUNTING	4
106	0724651	COVER	2
107	08005607	WINCH MOUNT, 35K FRONT	2
108	08005608	WINCH MOUNT, 35K REAR	2
109	0806994	HOUSE LOCK INDICATOR WELDMENT	4
110	0810433	HHU CHAIN ROLLER BRACKET, LH	1
111	0810434	HHU CHAIN ROLLER BRACKET, RH	1
112	09000097	ILLUMINATED LEGEND ASSY-LT UPP	1
113	09000135	ILLUMINATED LEGEND ASSY-RT UPP	1
114	09002247	CONTROL ASSY, 11 HANDLE WV	1
115	09002910	PUMP KIT, 4K KNEE BOOM	1
116	09002949	ILLUM LEGEND LT 1150 KNEE	1
117	09004266	U/L BOOM ASSEMBLY (SHORT)	1
118	09009470	SUBFRAME ASSY, 1140 RXP KB 12V	1
119	0906532	SWIVEL - BOOM ASSEMBLY	1
120	0908418	KIT-MUDFLAP CENTURY ROTATOR	1
121	0910231	BOOM ASSEMBLY 1140 (3-STAGE)	1
122	0910232	WRECKER FRAME ASSEMBLY - 1140	1
123	0910411	KIT - REAR OUTRGR 4-STG LG BOS	1
124	0910838	BUA '10 ROT AL BODY W/ XP TRI	1
125	0910935	XBAR ASY HRDWR-XHD 5X5 CENTURY	1
126	0911237	ILLUM LEGEND ASSY RH LWR WLV	1
127	0911324	RH CTL STATION ASSY 5 WINCH WV	1
128	0911804	AIR REGULATOR-GAUGE ASSEMBLY	4
129	24773017	HOSE ASSEMBLY 140"LG	2
130	24773018	HOSE ASSEMBLY 140"LG	2
131	9010520	FITTING-ELBOW 1/4T-1/4NPT	5
132	9024041	SWITCH, ROCKER SPST RED 12V21A	22
133	9041402	1/2 NC X 1 1/4 HHCS PLT GR8	6
134	9041403	1/2 NC X 1 1/2 HHCS PL GR8	14
135	9402970	TOOLBOX MTG. PAD	14
136	942480011	PLATE,SLOT-SS REAR WASHER TBOX	16
137	AWS-6821-A	HOSE ASSY-PRESSURE	10
138	FC41	FITTING-90DEG BLKHD ELB W/ NUT	8
139	HC1291	FITTING, 4MJ-4MB STR THR	16

09009128 BASIC UNIT ASSEMBLY 1140 RXP KNEEBOOM (cont'd)

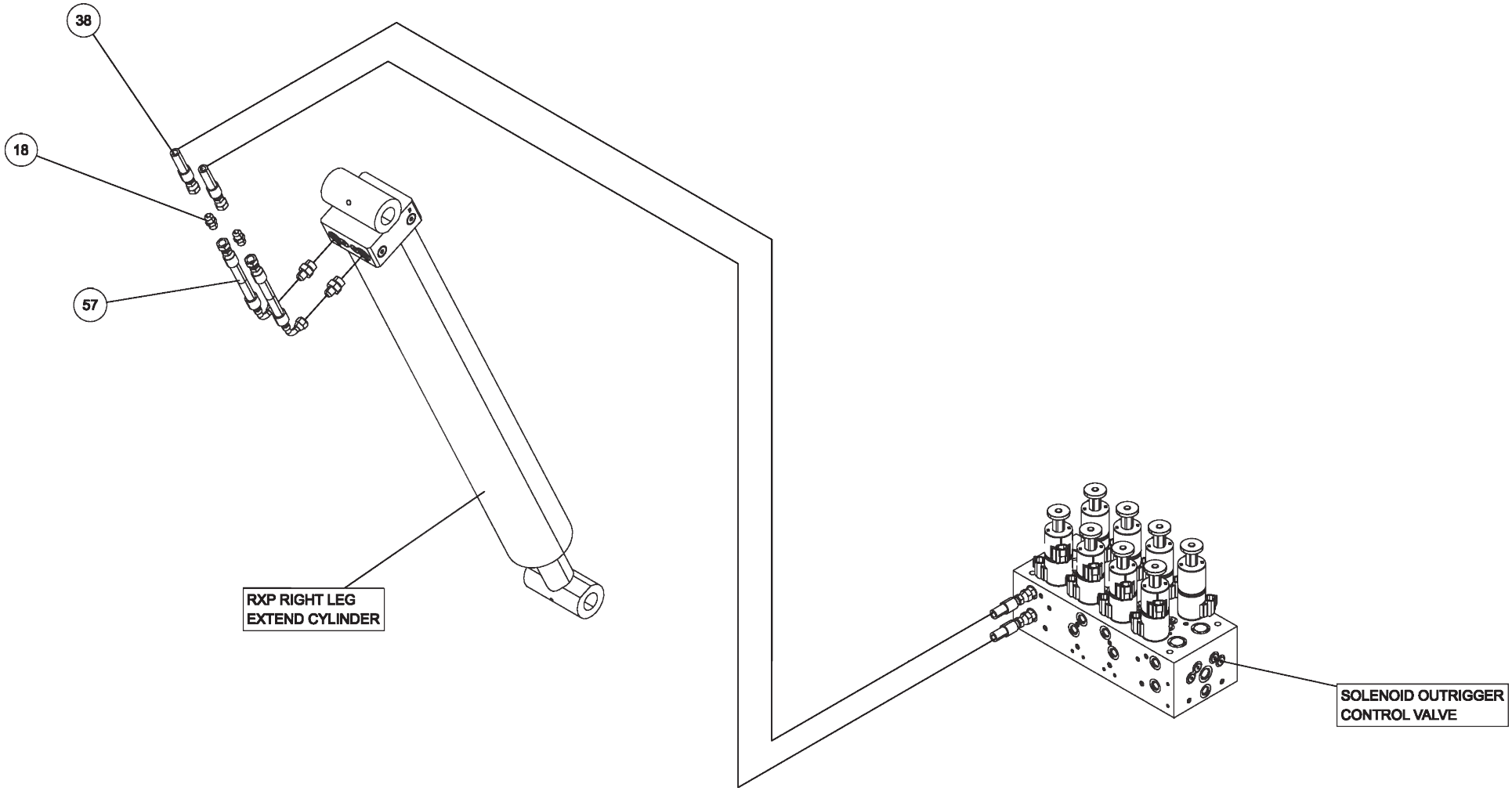

09009128 BASIC UNIT ASSEMBLY 1140 RXP KNEEBOOM (cont'd)

ITEM	PART NUMBER	DESCRIPTION	QTY
	09009128	BASIC UNIT ASSEMBLY 1140 RXP KB	
1	0300113	GREASE FITTING, 1/4-28 STR	1
2	03003419	HOSE, HYD 132" LG	1
3	03003420	HOSE, HYD 60" LG	1
4	03003421	HOSE, HYD 18"LG	3
5	03003424	HOSE, HYD 138"	1
6	03003425	HOSE, HYD 90" LG	4
7	03003426	HOSE, HYD 45" LG	6
8	0300364	CLAMP-HOSE,0.875"-2.75" 50"LBS	2
9	0300434	FITTING, HOSE BARB, 2	1
10	0300558	HOSE, SUCTION 2"ID 100R4 (C4)	1
11	0300835	KNOB-BOOM (UP-DOWN)	1
12	0300837	KNOB-BOOM (IN-OUT)	1
13	0300865	FITTING, CONNECTOR 8MJ-8MJ	5
14	0301113	HOSE HYD, 82"	2
15	0301207	HOSE HYD, 72"	4
16	0301377	FITTING, TEE,3/8" JIC	1
17	0301388	ELBOW, 8MJ-8MB90	3
18	0301422	FITTING, 6MJ-6MJ SMALL	4
19	0301473	HOSE HYD, 18" LG	2
20	0301522	ADAPTER, 6MJ-6MB	1
21	0301529	HOSE HYD, 58	2
22	03015922	STAUFF CLAMP, 3/8 TWIN	4
23	03016142	TUBE, HYD ASSY SF TO O/R	4
24	0301695	HOSE HYD, 91"	1
25	0301837	INLINE ORIFICE	4
26	0301909	RECEPTACLE BOOT	1
27	0301946	FITTING, BLKHD CONNECT	3
28	0301948	HD 7 WAY TRAILER CONNECT	1
29	0301961	BALL VALVE 2	1
30	0302056	HOSE HYD, 183"	5
31	0302205	GAUGE, FLUSH MNTG-6000 PSI	2
32	0302312	HOSE HYD, 43" LG 12G2AT	1
33	0302367	PIPE NIPPLE - 2 X 4	1
34	0302372	HOSE HYD, 240" LG	4
35	0302508	FITTING, ELL 8MJ-8MB 90LL	3
36	0302534	FITTING, 45 DEG ELBOW	2
37	0302604	HOSE HYD, 44"	2
38	0302632	HOSE HYD, 40"	8
39	0302805	HOSE HYD, 10"	1
40	0302856	KNOB-TILT, 3/8-16 THREAD	1
41	0302881	HOSE HYD, 45"	1
42	0303170	HOSE, HYD. 75"	1
43	0303340	HOSE HYD, 50" LG	1
44	0303379	KNOB, SWING CW - CCW	1
45	0303380	KNOB-UNDERLIFT (IN-OUT)	1
46	0303381	KNOB - UNDERLIFT (UP-DN)	1

ITEM	PART NUMBER	DESCRIPTION	QTY
47	0303391	HOSE 8AT2(8FJX-8FJ90) 110"	3
48	0303538	FITT, ADAPTER -BRASS 8FP-6MP	1
49	0303539	QUICK DISCONNECT 3/8 FPT	1
50	0303950	FITTING 45DEG DOT BRASS	1
51	0304363	QUICK DISCONNECT 1/2 FPT	2
52	0306537	EMERGENCY SWITCH	2
53	0306540	ROTARY SELECT SWITCH OPERATOR	12
54	0306870	HOSE HYDR - 96"	4
55	0306921	PIPE PLUG, 2" SQ HD	1
56	0307061	WINCH-35K dp 2-SP N.DRUM W/TEN	3
57	0307452	HOSE, HYD 146" LG	4
58	0307472	HOSE, HYD ASSY 24" LG	1
59	0307604	KNOB, RED LONG - SK0700-07	5
60	0310314	HOSE ASSY - 42" LG	4
61	0310456	PUSH BUTTN OPER W/MTG(RED) N/C	2
62	0310581	hose assy- 96" 8 fjx-10fjx90	4
63	0310637	PLUG, HOLE	2
64	0311191	ROLLER, POLY, 4" X 5/8"	2
65	0311305	T-BOLT CLAMP 1 3/8 TO 1 9/16	4
66	0311355	HOBBS HOURMETER	1
67	0311417	HOSE, 196" 3/8 2 X STRAIGHT	2
68	0311426	HOSE ASSY, 80" 4FJX-4FJX45	16
69	0311755	WATER SEPARATOR-MONNIER	1
70	0313129	HOSE, 1 SUCTION 16C4	34
71	0400005	SCREW, 6-32X1/2 PRH SS	6
72	0400012	LKWASHER, #8 SS	8
73	0400021	SCREW, 8-32X1/2 PRH SS	12
74	04000381	SS BHSCS 1/4-20 X 1	15
75	0400062	SCREW, 1/4-20X3/4 THC	3
76	0400066	SCREW, 1/4-20X3/4 HHC GR5	8
77	0400288	SCREW, 3/4-10X2-1/2 HHC GR8	16
78	0400307	SCREW, 7/8-9X4 HHC GR8	16
79	0400369	NUT, 1/4 SPR J	11
80	0400431	NUT, 3/4-10 LOK GR8	16
81	0400437	NUT, 7/8-9 LOK GR8	16
82	0400452	LKWASHER, 1/4	8
83	0400454	WASHER, 1/4 SS	2
84	0400473	WASHER, 7/8 PL GR8	16
85	0400489	WASHER, 3/4 SAE GR8	32
86	0400491	LKWASHER, 1/2	20
87	0400492	USS FLAT WASHER, 1/2	2
88	0400497	WASHER, 1/2 GR8	6
89	0400498	WASHER, 1/2X2X0.125	14
90	0400554	PIN, 3/8X1 SPR	3
91	0400900	NUT, 1/2-13 LOK JAM	2
92	0402020	SCREW, 1/4-20X3/4 HHC SS	2
93	0402021	SCREW, 1/4-20X1 HHC SS	13

ITEM	PART NUMBER	DESCRIPTION	QTY
94	0402044	SCREW, 3/8-16X1-1/2 HHC SS	8
95	0402080	WASHER, #8 SS	8
96	0402094	NUT, HEX 6-32 SS	6
97	0402110	WASHER, 1/4 SS	17
98	0402111	LKWASHER, 1/4 SS	30
99	0402113	NUT, 1/4-20 LOK SS	2
100	0402114	NUT, 1/4-20 LOK REV SS	11
101	0402120	WASHER, 3/8 SS	8
102	0402123	NUT, 3/8-16 LOK SS	8
103	07005922	MOUNT-HYD GAUGE	1
104	0712230	BOSS, TURNTABLE LOCK	4
105	0722104	ANGLE - WINCH MOUNTING	4
106	0724651	COVER	2
107	08005607	WINCH MOUNT, 35K FRONT	2
108	08005608	WINCH MOUNT, 35K REAR	2
109	0806994	HOUSE LOCK INDICATOR WELDMENT	4
110	0810433	HHU CHAIN ROLLER BRACKET, LH	1
111	0810434	HHU CHAIN ROLLER BRACKET, RH	1
112	09000097	ILLUMINATED LEGEND ASSY-LT UPP	1
113	09000135	ILLUMINATED LEGEND ASSY-RT UPP	1
114	09002247	CONTROL ASSY, 11 HANDLE WV	1
115	09002910	PUMP KIT, 4K KNEE BOOM	1
116	09002949	ILLUM LEGEND LT 1150 KNEE	1
117	09004266	U/L BOOM ASSEMBLY (SHORT)	1
118	09009470	SUBFRAME ASSY, 1140 RXP KB 12V	1
119	0906532	SWIVEL - BOOM ASSEMBLY	1
120	0908418	KIT-MUDFLAP CENTURY ROTATOR	1
121	0910231	BOOM ASSEMBLY 1140 (3-STAGE)	1
122	0910232	WRECKER FRAME ASSEMBLY - 1140	1
123	0910411	KIT - REAR OUTRGR 4-STG LG BOS	1
124	0910838	BUA '10 ROT AL BODY W/ XP TRI	1
125	0910935	XBAR ASY HRDWR-XHD 5X5 CENTURY	1
126	0911237	ILLUM LEGEND ASSY RH LWR WLV	1
127	0911324	RH CTL STATION ASSY 5 WINCH WV	1
128	0911804	AIR REGULATOR-GAUGE ASSEMBLY	4
129	24773017	HOSE ASSEMBLY 140"LG	2
130	24773018	HOSE ASSEMBLY 140"LG	2
131	9010520	FITTING-ELBOW 1/4T-1/4NPT	5
132	9024041	SWITCH, ROCKER SPST RED 12V21A	22
133	9041402	1/2 NC X 1 1/4 HHCS PLT GR8	6
134	9041403	1/2 NC X 1 1/2 HHCS PL GR8	14
135	9402970	TOOLBOX MTG. PAD	14
136	942480011	PLATE,SLOT-SS REAR WASHER TBOX	16
137	AWS-6821-A	HOSE ASSY-PRESSURE	10
138	FC41	FITTING-90DEG BLKHD ELB W/ NUT	8
139	HC1291	FITTING, 4MJ-4MB STR THR	16

09009128 BASIC UNIT ASSEMBLY 1140 RXP KNEEBOOM (cont'd)

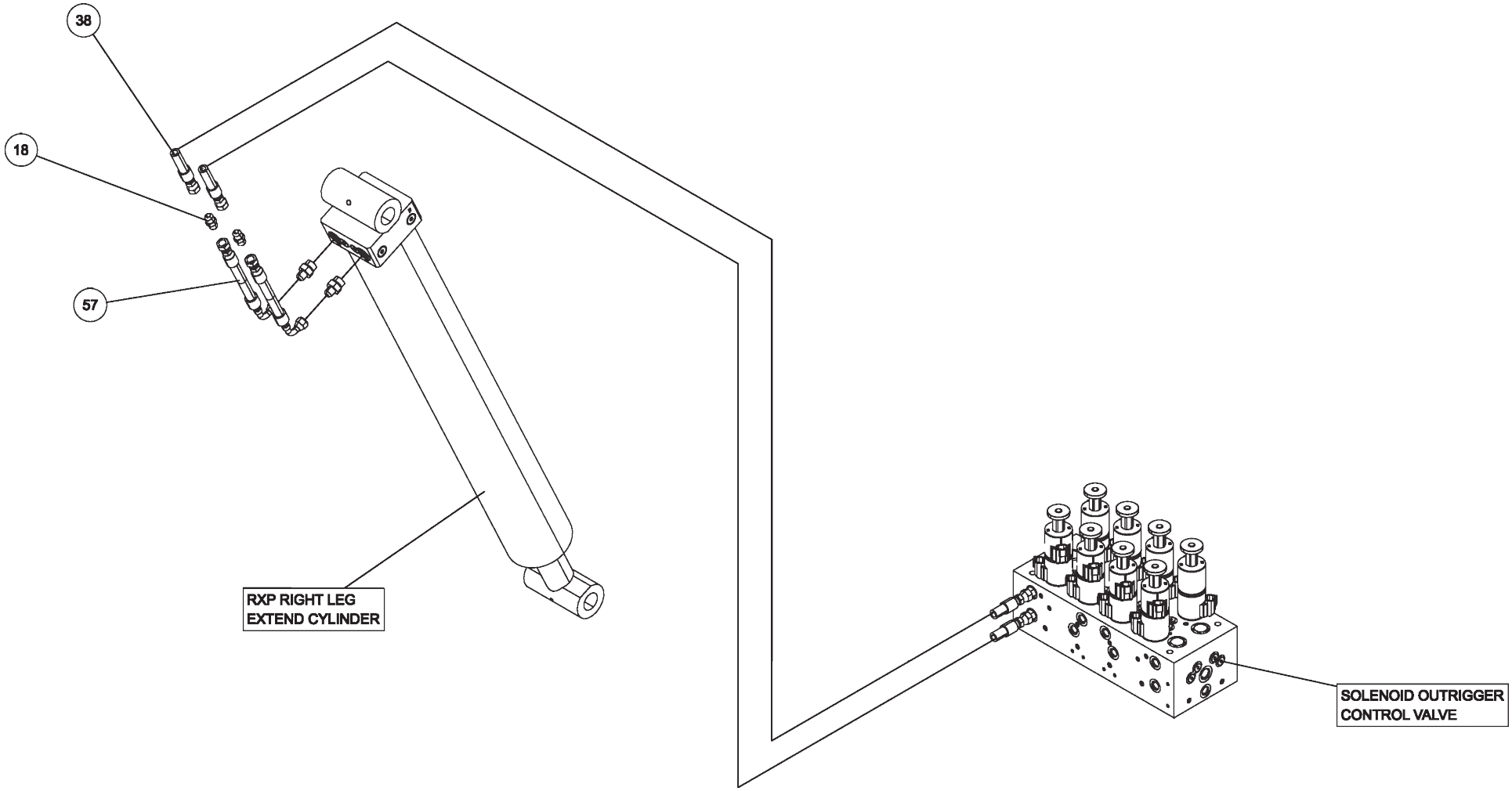

09009128 BASIC UNIT ASSEMBLY 1140 RXP KNEEBOOM (cont'd)

ITEM	PART NUMBER	DESCRIPTION	QTY
	09009128	BASIC UNIT ASSEMBLY 1140 RXP KB	
1	0300113	GREASE FITTING, 1/4-28 STR	1
2	03003419	HOSE, HYD 132" LG	1
3	03003420	HOSE, HYD 60" LG	1
4	03003421	HOSE, HYD 18"LG	3
5	03003424	HOSE, HYD 138"	1
6	03003425	HOSE, HYD 90" LG	4
7	03003426	HOSE, HYD 45" LG	6
8	0300364	CLAMP-HOSE,0.875"-2.75" 50"LBS	2
9	0300434	FITTING, HOSE BARB, 2	1
10	0300558	HOSE, SUCTION 2"ID 100R4 (C4)	1
11	0300835	KNOB-BOOM (UP-DOWN)	1
12	0300837	KNOB-BOOM (IN-OUT)	1
13	0300865	FITTING, CONNECTOR 8MJ-8MJ	5
14	0301113	HOSE HYD, 82"	2
15	0301207	HOSE HYD, 72"	4
16	0301377	FITTING, TEE,3/8" JIC	1
17	0301388	ELBOW, 8MJ-8MB90	3
18	0301422	FITTING, 6MJ-6MJ SMALL	4
19	0301473	HOSE HYD, 18" LG	2
20	0301522	ADAPTER, 6MJ-6MB	1
21	0301529	HOSE HYD, 58	2
22	03015922	STAUFF CLAMP, 3/8 TWIN	4
23	03016142	TUBE, HYD ASSY SF TO O/R	4
24	0301695	HOSE HYD, 91"	1
25	0301837	INLINE ORIFICE	4
26	0301909	RECEPTACLE BOOT	1
27	0301946	FITTING, BLKHD CONNECT	3
28	0301948	HD 7 WAY TRAILER CONNECT	1
29	0301961	BALL VALVE 2	1
30	0302056	HOSE HYD, 183"	5
31	0302205	GAUGE, FLUSH MNTG-6000 PSI	2
32	0302312	HOSE HYD, 43" LG 12G2AT	1
33	0302367	PIPE NIPPLE - 2 X 4	1
34	0302372	HOSE HYD, 240" LG	4
35	0302508	FITTING, ELL 8MJ-8MB 90LL	3
36	0302534	FITTING, 45 DEG ELBOW	2
37	0302604	HOSE HYD, 44"	2
38	0302632	HOSE HYD, 40"	8
39	0302805	HOSE HYD, 10"	1
40	0302856	KNOB-TILT, 3/8-16 THREAD	1
41	0302881	HOSE HYD, 45"	1
42	0303170	HOSE, HYD. 75"	1
43	0303340	HOSE HYD, 50" LG	1
44	0303379	KNOB, SWING CW - CCW	1
45	0303380	KNOB-UNDERLIFT (IN-OUT)	1
46	0303381	KNOB - UNDERLIFT (UP-DN)	1

ITEM	PART NUMBER	DESCRIPTION	QTY
47	0303391	HOSE 8AT2(8FJX-8FJ90) 110"	3
48	0303538	FITT, ADAPTER -BRASS 8FP-6MP	1
49	0303539	QUICK DISCONNECT 3/8 FPT	1
50	0303950	FITTING 45DEG DOT BRASS	1
51	0304363	QUICK DISCONNECT 1/2 FPT	2
52	0306537	EMERGENCY SWITCH	2
53	0306540	ROTARY SELECT SWITCH OPERATOR	12
54	0306870	HOSE HYDR - 96"	4
55	0306921	PIPE PLUG, 2" SQ HD	1
56	0307061	WINCH-35K dp 2-SP N.DRUM W/TEN	3
57	0307452	HOSE, HYD 146" LG	4
58	0307472	HOSE, HYD ASSY 24" LG	1
59	0307604	KNOB, RED LONG - SK0700-07	5
60	0310314	HOSE ASSY - 42" LG	4
61	0310456	PUSH BUTTN OPER W/MTG(RED) N/C	2
62	0310581	hose assy- 96" 8 fjx-10fjx90	4
63	0310637	PLUG, HOLE	2
64	0311191	ROLLER, POLY, 4" X 5/8"	2
65	0311305	T-BOLT CLAMP 1 3/8 TO 1 9/16	4
66	0311355	HOBBS HOURMETER	1
67	0311417	HOSE, 196" 3/8 2 X STRAIGHT	2
68	0311426	HOSE ASSY, 80" 4FJX-4FJX45	16
69	0311755	WATER SEPARATOR-MONNIER	1
70	0313129	HOSE, 1 SUCTION 16C4	34
71	0400005	SCREW, 6-32X1/2 PRH SS	6
72	0400012	LKWASHER, #8 SS	8
73	0400021	SCREW, 8-32X1/2 PRH SS	12
74	04000381	SS BHSCS 1/4-20 X 1	15
75	0400062	SCREW, 1/4-20X3/4 THC	3
76	0400066	SCREW, 1/4-20X3/4 HHC GR5	8
77	0400288	SCREW, 3/4-10X2-1/2 HHC GR8	16
78	0400307	SCREW, 7/8-9X4 HHC GR8	16
79	0400369	NUT, 1/4 SPR J	11
80	0400431	NUT, 3/4-10 LOK GR8	16
81	0400437	NUT, 7/8-9 LOK GR8	16
82	0400452	LKWASHER, 1/4	8
83	0400454	WASHER, 1/4 SS	2
84	0400473	WASHER, 7/8 PL GR8	16
85	0400489	WASHER, 3/4 SAE GR8	32
86	0400491	LKWASHER, 1/2	20
87	0400492	USS FLAT WASHER, 1/2	2
88	0400497	WASHER, 1/2 GR8	6
89	0400498	WASHER, 1/2X2X0.125	14
90	0400554	PIN, 3/8X1 SPR	3
91	0400900	NUT, 1/2-13 LOK JAM	2
92	0402020	SCREW, 1/4-20X3/4 HHC SS	2
93	0402021	SCREW, 1/4-20X1 HHC SS	13

ITEM	PART NUMBER	DESCRIPTION	QTY
94	0402044	SCREW, 3/8-16X1-1/2 HHC SS	8
95	0402080	WASHER, #8 SS	8
96	0402094	NUT, HEX 6-32 SS	6
97	0402110	WASHER, 1/4 SS	17
98	0402111	LKWASHER, 1/4 SS	30
99	0402113	NUT, 1/4-20 LOK SS	2
100	0402114	NUT, 1/4-20 LOK REV SS	11
101	0402120	WASHER, 3/8 SS	8
102	0402123	NUT, 3/8-16 LOK SS	8
103	07005922	MOUNT-HYD GAUGE	1
104	0712230	BOSS, TURNTABLE LOCK	4
105	0722104	ANGLE - WINCH MOUNTING	4
106	0724651	COVER	2
107	08005607	WINCH MOUNT, 35K FRONT	2
108	08005608	WINCH MOUNT, 35K REAR	2
109	0806994	HOUSE LOCK INDICATOR WELDMENT	4
110	0810433	HHU CHAIN ROLLER BRACKET, LH	1
111	0810434	HHU CHAIN ROLLER BRACKET, RH	1
112	09000097	ILLUMINATED LEGEND ASSY-LT UPP	1
113	09000135	ILLUMINATED LEGEND ASSY-RT UPP	1
114	09002247	CONTROL ASSY, 11 HANDLE WV	1
115	09002910	PUMP KIT, 4K KNEE BOOM	1
116	09002949	ILLUM LEGEND LT 1150 KNEE	1
117	09004266	U/L BOOM ASSEMBLY (SHORT)	1
118	09009470	SUBFRAME ASSY, 1140 RXP KB 12V	1
119	0906532	SWIVEL - BOOM ASSEMBLY	1
120	0908418	KIT-MUDFLAP CENTURY ROTATOR	1
121	0910231	BOOM ASSEMBLY 1140 (3-STAGE)	1
122	0910232	WRECKER FRAME ASSEMBLY - 1140	1
123	0910411	KIT - REAR OUTRGR 4-STG LG BOS	1
124	0910838	BUA '10 ROT AL BODY W/ XP TRI	1
125	0910935	XBAR ASY HRDWR-XHD 5X5 CENTURY	1
126	0911237	ILLUM LEGEND ASSY RH LWR WLV	1
127	0911324	RH CTL STATION ASSY 5 WINCH WV	1
128	0911804	AIR REGULATOR-GAUGE ASSEMBLY	4
129	24773017	HOSE ASSEMBLY 140"LG	2
130	24773018	HOSE ASSEMBLY 140"LG	2
131	9010520	FITTING-ELBOW 1/4T-1/4NPT	5
132	9024041	SWITCH, ROCKER SPST RED 12V21A	22
133	9041402	1/2 NC X 1 1/4 HHCS PLT GR8	6
134	9041403	1/2 NC X 1 1/2 HHCS PL GR8	14
135	9402970	TOOLBOX MTG. PAD	14
136	942480011	PLATE,SLOT-SS REAR WASHER TBOX	16
137	AWS-6821-A	HOSE ASSY-PRESSURE	10
138	FC41	FITTING-90DEG BLKHD ELB W/ NUT	8
139	HC1291	FITTING, 4MJ-4MB STR THR	16

09009128 BASIC UNIT ASSEMBLY 1140 RXP KNEEBOOM (cont'd)

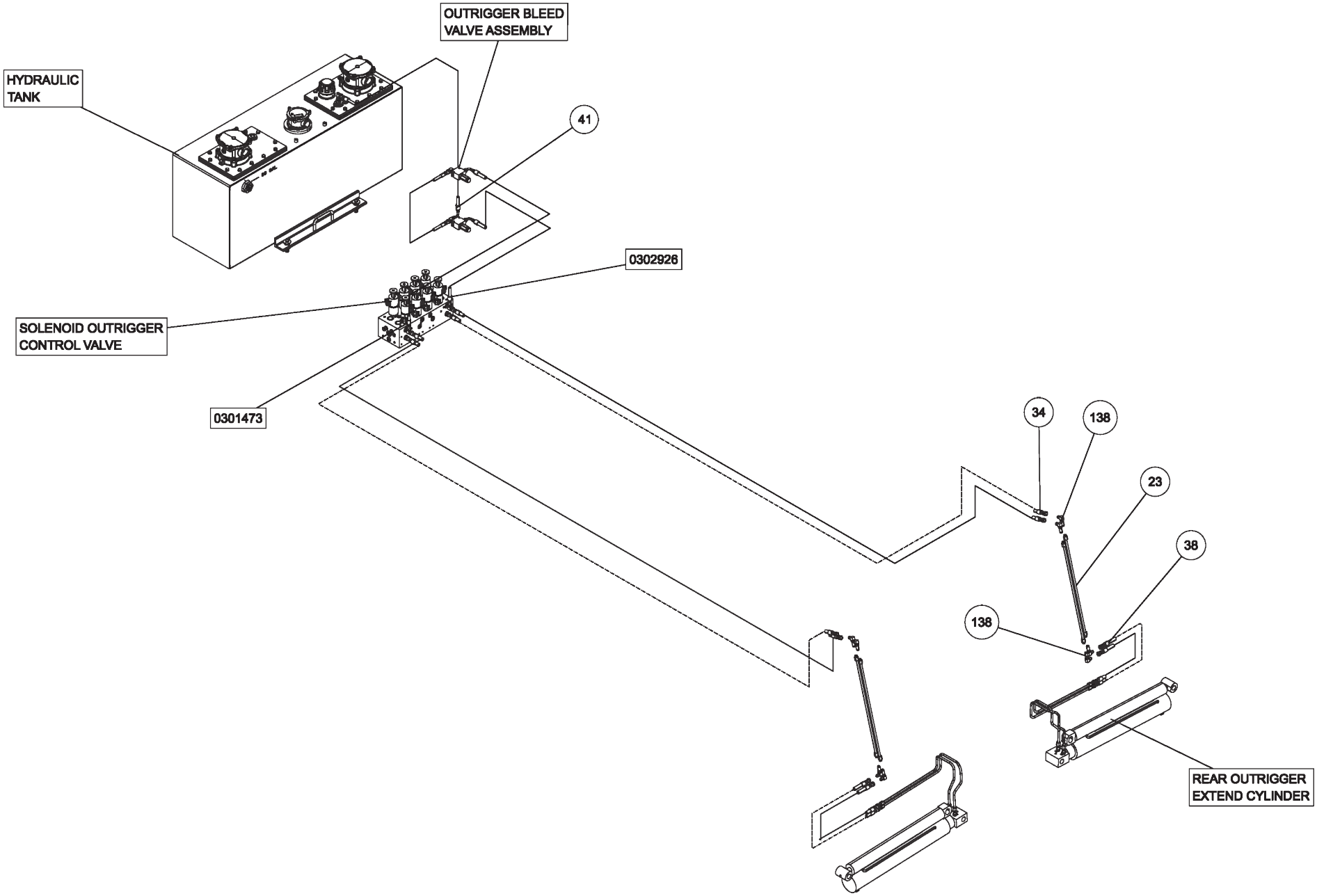

09009128 BASIC UNIT ASSEMBLY 1140 RXP KNEEBOOM (cont'd)

ITEM	PART NUMBER	DESCRIPTION	QTY
	09009128	BASIC UNIT ASSEMBLY 1140 RXP KB	
1	0300113	GREASE FITTING, 1/4-28 STR	1
2	03003419	HOSE, HYD 132" LG	1
3	03003420	HOSE, HYD 60" LG	1
4	03003421	HOSE, HYD 18"LG	3
5	03003424	HOSE, HYD 138"	1
6	03003425	HOSE, HYD 90" LG	4
7	03003426	HOSE, HYD 45" LG	6
8	0300364	CLAMP-HOSE,0.875"-2.75" 50"LBS	2
9	0300434	FITTING, HOSE BARB, 2	1
10	0300558	HOSE, SUCTION 2"ID 100R4 (C4)	1
11	0300835	KNOB-BOOM (UP-DOWN)	1
12	0300837	KNOB-BOOM (IN-OUT)	1
13	0300865	FITTING, CONNECTOR 8MJ-8MJ	5
14	0301113	HOSE HYD, 82"	2
15	0301207	HOSE HYD, 72"	4
16	0301377	FITTING, TEE,3/8" JIC	1
17	0301388	ELBOW, 8MJ-8MB90	3
18	0301422	FITTING, 6MJ-6MJ SMALL	4
19	0301473	HOSE HYD, 18" LG	2
20	0301522	ADAPTER, 6MJ-6MB	1
21	0301529	HOSE HYD, 58	2
22	03015922	STAUFF CLAMP, 3/8 TWIN	4
23	03016142	TUBE, HYD ASSY SF TO O/R	4
24	0301695	HOSE HYD, 91"	1
25	0301837	INLINE ORIFICE	4
26	0301909	RECEPTACLE BOOT	1
27	0301946	FITTING, BLKHD CONNECT	3
28	0301948	HD 7 WAY TRAILER CONNECT	1
29	0301961	BALL VALVE 2	1
30	0302056	HOSE HYD, 183"	5
31	0302205	GAUGE, FLUSH MNTG-6000 PSI	2
32	0302312	HOSE HYD, 43" LG 12G2AT	1
33	0302367	PIPE NIPPLE - 2 X 4	1
34	0302372	HOSE HYD, 240" LG	4
35	0302508	FITTING, ELL 8MJ-8MB 90LL	3
36	0302534	FITTING, 45 DEG ELBOW	2
37	0302604	HOSE HYD, 44"	2
38	0302632	HOSE HYD, 40"	8
39	0302805	HOSE HYD, 10"	1
40	0302856	KNOB-TILT, 3/8-16 THREAD	1
41	0302881	HOSE HYD, 45"	1
42	0303170	HOSE, HYD. 75"	1
43	0303340	HOSE HYD, 50" LG	1
44	0303379	KNOB, SWING CW - CCW	1
45	0303380	KNOB-UNDERLIFT (IN-OUT)	1
46	0303381	KNOB - UNDERLIFT (UP-DN)	1

ITEM	PART NUMBER	DESCRIPTION	QTY
47	0303391	HOSE 8AT2(8FJX-8FJ90) 110"	3
48	0303538	FITT, ADAPTER -BRASS 8FP-6MP	1
49	0303539	QUICK DISCONNECT 3/8 FPT	1
50	0303950	FITTING 45DEG DOT BRASS	1
51	0304363	QUICK DISCONNECT 1/2 FPT	2
52	0306537	EMERGENCY SWITCH	2
53	0306540	ROTARY SELECT SWITCH OPERATOR	12
54	0306870	HOSE HYDR - 96"	4
55	0306921	PIPE PLUG, 2" SQ HD	1
56	0307061	WINCH-35K dp 2-SP N.DRUM W/TEN	3
57	0307452	HOSE, HYD 146" LG	4
58	0307472	HOSE, HYD ASSY 24" LG	1
59	0307604	KNOB, RED LONG - SK0700-07	5
60	0310314	HOSE ASSY - 42" LG	4
61	0310456	PUSH BUTTN OPER W/MTG(RED) N/C	2
62	0310581	hose assy- 96" 8 fjx-10fjx90	4
63	0310637	PLUG, HOLE	2
64	0311191	ROLLER, POLY, 4" X 5/8"	2
65	0311305	T-BOLT CLAMP 1 3/8 TO 1 9/16	4
66	0311355	HOBBS HOURMETER	1
67	0311417	HOSE, 196" 3/8 2 X STRAIGHT	2
68	0311426	HOSE ASSY, 80" 4FJX-4FJX45	16
69	0311755	WATER SEPARATOR-MONNIER	1
70	0313129	HOSE, 1 SUCTION 16C4	34
71	0400005	SCREW, 6-32X1/2 PRH SS	6
72	0400012	LKWASHER, #8 SS	8
73	0400021	SCREW, 8-32X1/2 PRH SS	12
74	04000381	SS BHSCS 1/4-20 X 1	15
75	0400062	SCREW, 1/4-20X3/4 THC	3
76	0400066	SCREW, 1/4-20X3/4 HHC GR5	8
77	0400288	SCREW, 3/4-10X2-1/2 HHC GR8	16
78	0400307	SCREW, 7/8-9X4 HHC GR8	16
79	0400369	NUT, 1/4 SPR J	11
80	0400431	NUT, 3/4-10 LOK GR8	16
81	0400437	NUT, 7/8-9 LOK GR8	16
82	0400452	LKWASHER, 1/4	8
83	0400454	WASHER, 1/4 SS	2
84	0400473	WASHER, 7/8 PL GR8	16
85	0400489	WASHER, 3/4 SAE GR8	32
86	0400491	LKWASHER, 1/2	20
87	0400492	USS FLAT WASHER, 1/2	2
88	0400497	WASHER, 1/2 GR8	6
89	0400498	WASHER, 1/2X2X0.125	14
90	0400554	PIN, 3/8X1 SPR	3
91	0400900	NUT, 1/2-13 LOK JAM	2
92	0402020	SCREW, 1/4-20X3/4 HHC SS	2
93	0402021	SCREW, 1/4-20X1 HHC SS	13

ITEM	PART NUMBER	DESCRIPTION	QTY
94	0402044	SCREW, 3/8-16X1-1/2 HHC SS	8
95	0402080	WASHER, #8 SS	8
96	0402094	NUT, HEX 6-32 SS	6
97	0402110	WASHER, 1/4 SS	17
98	0402111	LKWASHER, 1/4 SS	30
99	0402113	NUT, 1/4-20 LOK SS	2
100	0402114	NUT, 1/4-20 LOK REV SS	11
101	0402120	WASHER, 3/8 SS	8
102	0402123	NUT, 3/8-16 LOK SS	8
103	07005922	MOUNT-HYD GAUGE	1
104	0712230	BOSS, TURNTABLE LOCK	4
105	0722104	ANGLE - WINCH MOUNTING	4
106	0724651	COVER	2
107	08005607	WINCH MOUNT, 35K FRONT	2
108	08005608	WINCH MOUNT, 35K REAR	2
109	0806994	HOUSE LOCK INDICATOR WELDMENT	4
110	0810433	HHU CHAIN ROLLER BRACKET, LH	1
111	0810434	HHU CHAIN ROLLER BRACKET, RH	1
112	09000097	ILLUMINATED LEGEND ASSY-LT UPP	1
113	09000135	ILLUMINATED LEGEND ASSY-RT UPP	1
114	09002247	CONTROL ASSY, 11 HANDLE WV	1
115	09002910	PUMP KIT, 4K KNEE BOOM	1
116	09002949	ILLUM LEGEND LT 1150 KNEE	1
117	09004266	U/L BOOM ASSEMBLY (SHORT)	1
118	09009470	SUBFRAME ASSY, 1140 RXP KB 12V	1
119	0906532	SWIVEL - BOOM ASSEMBLY	1
120	0908418	KIT-MUDFLAP CENTURY ROTATOR	1
121	0910231	BOOM ASSEMBLY 1140 (3-STAGE)	1
122	0910232	WRECKER FRAME ASSEMBLY - 1140	1
123	0910411	KIT - REAR OUTRGR 4-STG LG BOS	1
124	0910838	BUA '10 ROT AL BODY W/ XP TRI	1
125	0910935	XBAR ASY HRDWR-XHD 5X5 CENTURY	1
126	0911237	ILLUM LEGEND ASSY RH LWR WLV	1
127	0911324	RH CTL STATION ASSY 5 WINCH WV	1
128	0911804	AIR REGULATOR-GAUGE ASSEMBLY	4
129	24773017	HOSE ASSEMBLY 140"LG	2
130	24773018	HOSE ASSEMBLY 140"LG	2
131	9010520	FITTING-ELBOW 1/4T-1/4NPT	5
132	9024041	SWITCH, ROCKER SPST RED 12V21A	22
133	9041402	1/2 NC X 1 1/4 HHCS PLT GR8	6
134	9041403	1/2 NC X 1 1/2 HHCS PL GR8	14
135	9402970	TOOLBOX MTG. PAD	14
136	942480011	PLATE,SLOT-SS REAR WASHER TBOX	16
137	AWS-6821-A	HOSE ASSY-PRESSURE	10
138	FC41	FITTING-90DEG BLKHD ELB W/ NUT	8
139	HC1291	FITTING, 4MJ-4MB STR THR	16

09009128 BASIC UNIT ASSEMBLY 1140 RXP KNEEBOOM (cont'd)

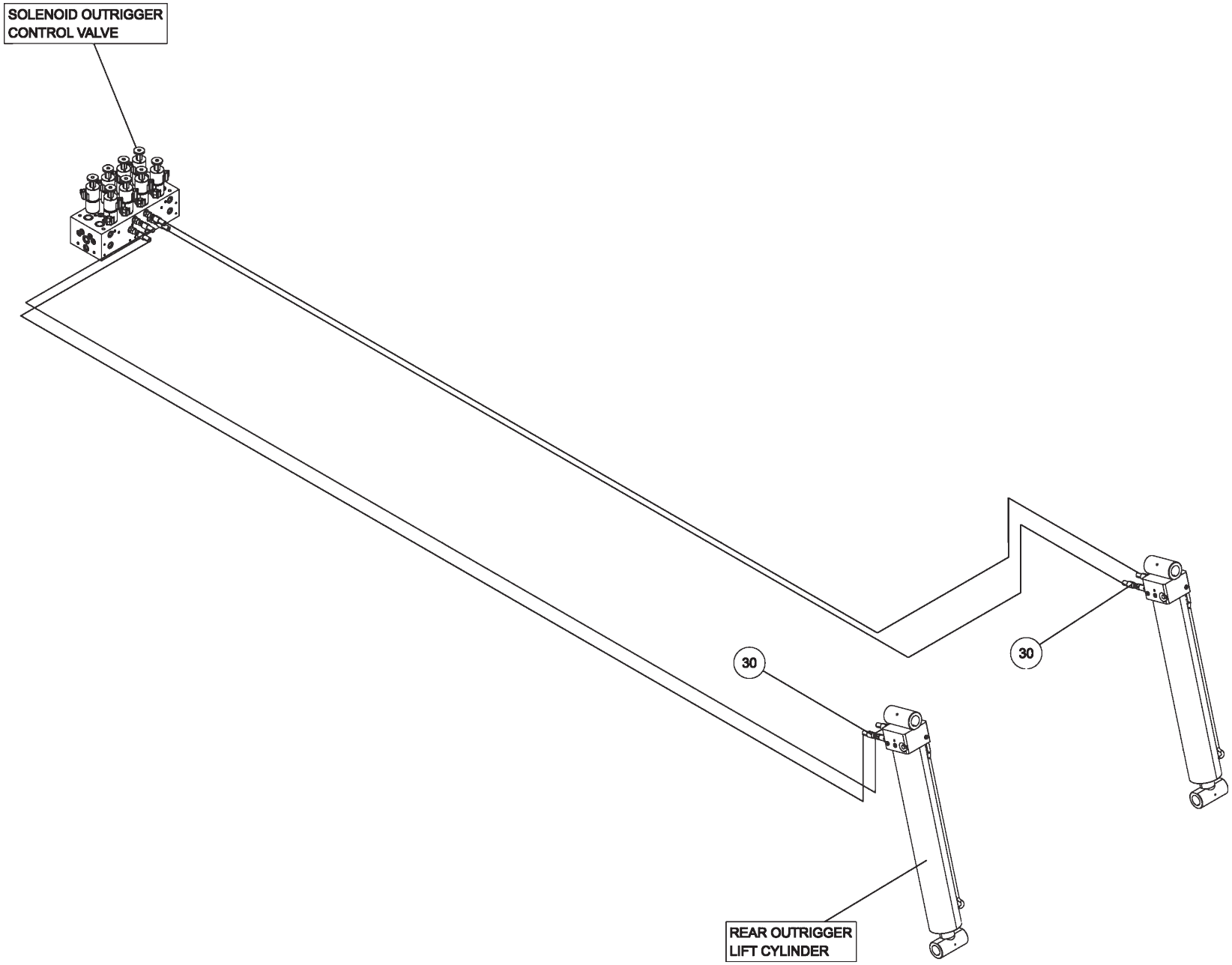

09009128 BASIC UNIT ASSEMBLY 1140 RXP KNEEBOOM (cont'd)

ITEM	PART NUMBER	DESCRIPTION	QTY
	09009128	BASIC UNIT ASSEMBLY 1140 RXP KB	
1	0300113	GREASE FITTING, 1/4-28 STR	1
2	03003419	HOSE, HYD 132" LG	1
3	03003420	HOSE, HYD 60" LG	1
4	03003421	HOSE, HYD 18"LG	3
5	03003424	HOSE, HYD 138"	1
6	03003425	HOSE, HYD 90" LG	4
7	03003426	HOSE, HYD 45" LG	6
8	0300364	CLAMP-HOSE,0.875"-2.75" 50"LBS	2
9	0300434	FITTING, HOSE BARB, 2	1
10	0300558	HOSE, SUCTION 2"ID 100R4 (C4)	1
11	0300835	KNOB-BOOM (UP-DOWN)	1
12	0300837	KNOB-BOOM (IN-OUT)	1
13	0300865	FITTING, CONNECTOR 8MJ-8MJ	5
14	0301113	HOSE HYD, 82"	2
15	0301207	HOSE HYD, 72"	4
16	0301377	FITTING, TEE,3/8" JIC	1
17	0301388	ELBOW, 8MJ-8MB90	3
18	0301422	FITTING, 6MJ-6MJ SMALL	4
19	0301473	HOSE HYD, 18" LG	2
20	0301522	ADAPTER, 6MJ-6MB	1
21	0301529	HOSE HYD, 58	2
22	03015922	STAUFF CLAMP, 3/8 TWIN	4
23	03016142	TUBE, HYD ASSY SF TO O/R	4
24	0301695	HOSE HYD, 91"	1
25	0301837	INLINE ORIFICE	4
26	0301909	RECEPTACLE BOOT	1
27	0301946	FITTING, BLKHD CONNECT	3
28	0301948	HD 7 WAY TRAILER CONNECT	1
29	0301961	BALL VALVE 2	1
30	0302056	HOSE HYD, 183"	5
31	0302205	GAUGE, FLUSH MNTG-6000 PSI	2
32	0302312	HOSE HYD, 43" LG 12G2AT	1
33	0302367	PIPE NIPPLE - 2 X 4	1
34	0302372	HOSE HYD, 240" LG	4
35	0302508	FITTING, ELL 8MJ-8MB 90LL	3
36	0302534	FITTING, 45 DEG ELBOW	2
37	0302604	HOSE HYD, 44"	2
38	0302632	HOSE HYD, 40"	8
39	0302805	HOSE HYD, 10"	1
40	0302856	KNOB-TILT, 3/8-16 THREAD	1
41	0302881	HOSE HYD, 45"	1
42	0303170	HOSE, HYD. 75"	1
43	0303340	HOSE HYD, 50" LG	1
44	0303379	KNOB, SWING CW - CCW	1
45	0303380	KNOB-UNDERLIFT (IN-OUT)	1
46	0303381	KNOB - UNDERLIFT (UP-DN)	1

ITEM	PART NUMBER	DESCRIPTION	QTY
47	0303391	HOSE 8AT2(8FJX-8FJ90) 110"	3
48	0303538	FITT, ADAPTER -BRASS 8FP-6MP	1
49	0303539	QUICK DISCONNECT 3/8 FPT	1
50	0303950	FITTING 45DEG DOT BRASS	1
51	0304363	QUICK DISCONNECT 1/2 FPT	2
52	0306537	EMERGENCY SWITCH	2
53	0306540	ROTARY SELECT SWITCH OPERATOR	12
54	0306870	HOSE HYDR - 96"	4
55	0306921	PIPE PLUG, 2" SQ HD	1
56	0307061	WINCH-35K dp 2-SP N.DRUM W/TEN	3
57	0307452	HOSE, HYD 146" LG	4
58	0307472	HOSE, HYD ASSY 24" LG	1
59	0307604	KNOB, RED LONG - SK0700-07	5
60	0310314	HOSE ASSY - 42" LG	4
61	0310456	PUSH BUTTN OPER W/MTG(RED) N/C	2
62	0310581	hose assy- 96" 8 fjx-10fjx90	4
63	0310637	PLUG, HOLE	2
64	0311191	ROLLER, POLY, 4" X 5/8"	2
65	0311305	T-BOLT CLAMP 1 3/8 TO 1 9/16	4
66	0311355	HOBBS HOURMETER	1
67	0311417	HOSE, 196" 3/8 2 X STRAIGHT	2
68	0311426	HOSE ASSY, 80" 4FJX-4FJX45	16
69	0311755	WATER SEPARATOR-MONNIER	1
70	0313129	HOSE, 1 SUCTION 16C4	34
71	0400005	SCREW, 6-32X1/2 PRH SS	6
72	0400012	LKWASHER, #8 SS	8
73	0400021	SCREW, 8-32X1/2 PRH SS	12
74	04000381	SS BHSCS 1/4-20 X 1	15
75	0400062	SCREW, 1/4-20X3/4 THC	3
76	0400066	SCREW, 1/4-20X3/4 HHC GR5	8
77	0400288	SCREW, 3/4-10X2-1/2 HHC GR8	16
78	0400307	SCREW, 7/8-9X4 HHC GR8	16
79	0400369	NUT, 1/4 SPR J	11
80	0400431	NUT, 3/4-10 LOK GR8	16
81	0400437	NUT, 7/8-9 LOK GR8	16
82	0400452	LKWASHER, 1/4	8
83	0400454	WASHER, 1/4 SS	2
84	0400473	WASHER, 7/8 PL GR8	16
85	0400489	WASHER, 3/4 SAE GR8	32
86	0400491	LKWASHER, 1/2	20
87	0400492	USS FLAT WASHER, 1/2	2
88	0400497	WASHER, 1/2 GR8	6
89	0400498	WASHER, 1/2X2X0.125	14
90	0400554	PIN, 3/8X1 SPR	3
91	0400900	NUT, 1/2-13 LOK JAM	2
92	0402020	SCREW, 1/4-20X3/4 HHC SS	2
93	0402021	SCREW, 1/4-20X1 HHC SS	13

ITEM	PART NUMBER	DESCRIPTION	QTY
94	0402044	SCREW, 3/8-16X1-1/2 HHC SS	8
95	0402080	WASHER, #8 SS	8
96	0402094	NUT, HEX 6-32 SS	6
97	0402110	WASHER, 1/4 SS	17
98	0402111	LKWASHER, 1/4 SS	30
99	0402113	NUT, 1/4-20 LOK SS	2
100	0402114	NUT, 1/4-20 LOK REV SS	11
101	0402120	WASHER, 3/8 SS	8
102	0402123	NUT, 3/8-16 LOK SS	8
103	07005922	MOUNT-HYD GAUGE	1
104	0712230	BOSS, TURNTABLE LOCK	4
105	0722104	ANGLE - WINCH MOUNTING	4
106	0724651	COVER	2
107	08005607	WINCH MOUNT, 35K FRONT	2
108	08005608	WINCH MOUNT, 35K REAR	2
109	0806994	HOUSE LOCK INDICATOR WELDMENT	4
110	0810433	HHU CHAIN ROLLER BRACKET, LH	1
111	0810434	HHU CHAIN ROLLER BRACKET, RH	1
112	09000097	ILLUMINATED LEGEND ASSY-LT UPP	1
113	09000135	ILLUMINATED LEGEND ASSY-RT UPP	1
114	09002247	CONTROL ASSY, 11 HANDLE WV	1
115	09002910	PUMP KIT, 4K KNEE BOOM	1
116	09002949	ILLUM LEGEND LT 1150 KNEE	1
117	09004266	U/L BOOM ASSEMBLY (SHORT)	1
118	09009470	SUBFRAME ASSY, 1140 RXP KB 12V	1
119	0906532	SWIVEL - BOOM ASSEMBLY	1
120	0908418	KIT-MUDFLAP CENTURY ROTATOR	1
121	0910231	BOOM ASSEMBLY 1140 (3-STAGE)	1
122	0910232	WRECKER FRAME ASSEMBLY - 1140	1
123	0910411	KIT - REAR OUTRGR 4-STG LG BOS	1
124	0910838	BUA '10 ROT AL BODY W/ XP TRI	1
125	0910935	XBAR ASY HRDWR-XHD 5X5 CENTURY	1
126	0911237	ILLUM LEGEND ASSY RH LWR WLV	1
127	0911324	RH CTL STATION ASSY 5 WINCH WV	1
128	0911804	AIR REGULATOR-GAUGE ASSEMBLY	4
129	24773017	HOSE ASSEMBLY 140"LG	2
130	24773018	HOSE ASSEMBLY 140"LG	2
131	9010520	FITTING-ELBOW 1/4T-1/4NPT	5
132	9024041	SWITCH, ROCKER SPST RED 12V21A	22
133	9041402	1/2 NC X 1 1/4 HHCS PLT GR8	6
134	9041403	1/2 NC X 1 1/2 HHCS PL GR8	14
135	9402970	TOOLBOX MTG. PAD	14
136	942480011	PLATE,SLOT-SS REAR WASHER TBOX	16
137	AWS-6821-A	HOSE ASSY-PRESSURE	10
138	FC41	FITTING-90DEG BLKHD ELB W/ NUT	8
139	HC1291	FITTING, 4MJ-4MB STR THR	16

09009128 BASIC UNIT ASSEMBLY 1140 RXP KNEEBOOM (cont'd)

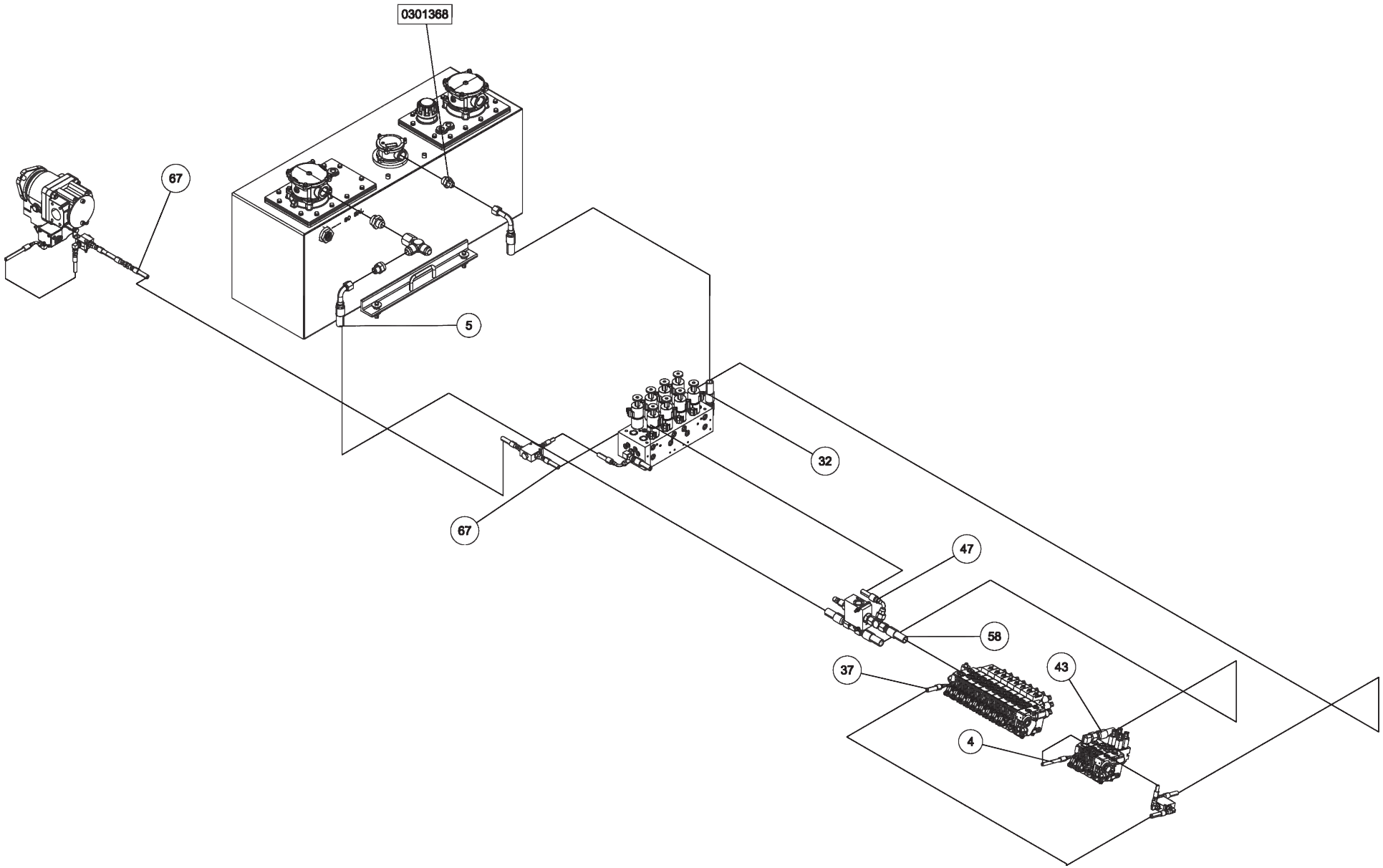

09009128 BASIC UNIT ASSEMBLY 1140 RXP KNEEBOOM (cont'd)

ITEM	PART NUMBER	DESCRIPTION	QTY
	09009128	BASIC UNIT ASSEMBLY 1140 RXP KB	
1	0300113	GREASE FITTING, 1/4-28 STR	1
2	03003419	HOSE, HYD 132" LG	1
3	03003420	HOSE, HYD 60" LG	1
4	03003421	HOSE, HYD 18"LG	3
5	03003424	HOSE, HYD 138"	1
6	03003425	HOSE, HYD 90" LG	4
7	03003426	HOSE, HYD 45" LG	6
8	0300364	CLAMP-HOSE,0.875"-2.75" 50"LBS	2
9	0300434	FITTING, HOSE BARB, 2	1
10	0300558	HOSE, SUCTION 2"ID 100R4 (C4)	1
11	0300835	KNOB-BOOM (UP-DOWN)	1
12	0300837	KNOB-BOOM (IN-OUT)	1
13	0300865	FITTING, CONNECTOR 8MJ-8MJ	5
14	0301113	HOSE HYD, 82"	2
15	0301207	HOSE HYD, 72"	4
16	0301377	FITTING, TEE,3/8" JIC	1
17	0301388	ELBOW, 8MJ-8MB90	3
18	0301422	FITTING, 6MJ-6MJ SMALL	4
19	0301473	HOSE HYD, 18" LG	2
20	0301522	ADAPTER, 6MJ-6MB	1
21	0301529	HOSE HYD, 58	2
22	03015922	STAUFF CLAMP, 3/8 TWIN	4
23	03016142	TUBE, HYD ASSY SF TO O/R	4
24	0301695	HOSE HYD, 91"	1
25	0301837	INLINE ORIFICE	4
26	0301909	RECEPTACLE BOOT	1
27	0301946	FITTING, BLKHD CONNECT	3
28	0301948	HD 7 WAY TRAILER CONNECT	1
29	0301961	BALL VALVE 2	1
30	0302056	HOSE HYD, 183"	5
31	0302205	GAUGE, FLUSH MNTG-6000 PSI	2
32	0302312	HOSE HYD, 43" LG 12G2AT	1
33	0302367	PIPE NIPPLE - 2 X 4	1
34	0302372	HOSE HYD, 240" LG	4
35	0302508	FITTING, ELL 8MJ-8MB 90LL	3
36	0302534	FITTING, 45 DEG ELBOW	2
37	0302604	HOSE HYD, 44"	2
38	0302632	HOSE HYD, 40"	8
39	0302805	HOSE HYD, 10"	1
40	0302856	KNOB-TILT, 3/8-16 THREAD	1
41	0302881	HOSE HYD, 45"	1
42	0303170	HOSE, HYD. 75"	1
43	0303340	HOSE HYD, 50" LG	1
44	0303379	KNOB, SWING CW - CCW	1
45	0303380	KNOB-UNDERLIFT (IN-OUT)	1
46	0303381	KNOB - UNDERLIFT (UP-DN)	1

ITEM	PART NUMBER	DESCRIPTION	QTY
47	0303391	HOSE 8AT2(8FJX-8FJ90) 110"	3
48	0303538	FITT, ADAPTER -BRASS 8FP-6MP	1
49	0303539	QUICK DISCONNECT 3/8 FPT	1
50	0303950	FITTING 45DEG DOT BRASS	1
51	0304363	QUICK DISCONNECT 1/2 FPT	2
52	0306537	EMERGENCY SWITCH	2
53	0306540	ROTARY SELECT SWITCH OPERATOR	12
54	0306870	HOSE HYDR - 96"	4
55	0306921	PIPE PLUG, 2" SQ HD	1
56	0307061	WINCH-35K dp 2-SP N.DRUM W/TEN	3
57	0307452	HOSE, HYD 146" LG	4
58	0307472	HOSE, HYD ASSY 24" LG	1
59	0307604	KNOB, RED LONG - SK0700-07	5
60	0310314	HOSE ASSY - 42" LG	4
61	0310456	PUSH BUTTN OPER W/MTG(RED) N/C	2
62	0310581	hose assy- 96" 8 fjx-10fjx90	4
63	0310637	PLUG, HOLE	2
64	0311191	ROLLER, POLY, 4" X 5/8"	2
65	0311305	T-BOLT CLAMP 1 3/8 TO 1 9/16	4
66	0311355	HOBBS HOURMETER	1
67	0311417	HOSE, 196" 3/8 2 X STRAIGHT	2
68	0311426	HOSE ASSY, 80" 4FJX-4FJX45	16
69	0311755	WATER SEPARATOR-MONNIER	1
70	0313129	HOSE, 1 SUCTION 16C4	34
71	0400005	SCREW, 6-32X1/2 PRH SS	6
72	0400012	LKWASHER, #8 SS	8
73	0400021	SCREW, 8-32X1/2 PRH SS	12
74	04000381	SS BHSCS 1/4-20 X 1	15
75	0400062	SCREW, 1/4-20X3/4 THC	3
76	0400066	SCREW, 1/4-20X3/4 HHC GR5	8
77	0400288	SCREW, 3/4-10X2-1/2 HHC GR8	16
78	0400307	SCREW, 7/8-9X4 HHC GR8	16
79	0400369	NUT, 1/4 SPR J	11
80	0400431	NUT, 3/4-10 LOK GR8	16
81	0400437	NUT, 7/8-9 LOK GR8	16
82	0400452	LKWASHER, 1/4	8
83	0400454	WASHER, 1/4 SS	2
84	0400473	WASHER, 7/8 PL GR8	16
85	0400489	WASHER, 3/4 SAE GR8	32
86	0400491	LKWASHER, 1/2	20
87	0400492	USS FLAT WASHER, 1/2	2
88	0400497	WASHER, 1/2 GR8	6
89	0400498	WASHER, 1/2X2X0.125	14
90	0400554	PIN, 3/8X1 SPR	3
91	0400900	NUT, 1/2-13 LOK JAM	2
92	0402020	SCREW, 1/4-20X3/4 HHC SS	2
93	0402021	SCREW, 1/4-20X1 HHC SS	13

ITEM	PART NUMBER	DESCRIPTION	QTY
94	0402044	SCREW, 3/8-16X1-1/2 HHC SS	8
95	0402080	WASHER, #8 SS	8
96	0402094	NUT, HEX 6-32 SS	6
97	0402110	WASHER, 1/4 SS	17
98	0402111	LKWASHER, 1/4 SS	30
99	0402113	NUT, 1/4-20 LOK SS	2
100	0402114	NUT, 1/4-20 LOK REV SS	11
101	0402120	WASHER, 3/8 SS	8
102	0402123	NUT, 3/8-16 LOK SS	8
103	07005922	MOUNT-HYD GAUGE	1
104	0712230	BOSS, TURNTABLE LOCK	4
105	0722104	ANGLE - WINCH MOUNTING	4
106	0724651	COVER	2
107	08005607	WINCH MOUNT, 35K FRONT	2
108	08005608	WINCH MOUNT, 35K REAR	2
109	0806994	HOUSE LOCK INDICATOR WELDMENT	4
110	0810433	HHU CHAIN ROLLER BRACKET, LH	1
111	0810434	HHU CHAIN ROLLER BRACKET, RH	1
112	09000097	ILLUMINATED LEGEND ASSY-LT UPP	1
113	09000135	ILLUMINATED LEGEND ASSY-RT UPP	1
114	09002247	CONTROL ASSY, 11 HANDLE WV	1
115	09002910	PUMP KIT, 4K KNEE BOOM	1
116	09002949	ILLUM LEGEND LT 1150 KNEE	1
117	09004266	U/L BOOM ASSEMBLY (SHORT)	1
118	09009470	SUBFRAME ASSY, 1140 RXP KB 12V	1
119	0906532	SWIVEL - BOOM ASSEMBLY	1
120	0908418	KIT-MUDFLAP CENTURY ROTATOR	1
121	0910231	BOOM ASSEMBLY 1140 (3-STAGE)	1
122	0910232	WRECKER FRAME ASSEMBLY - 1140	1
123	0910411	KIT - REAR OUTRGR 4-STG LG BOS	1
124	0910838	BUA '10 ROT AL BODY W/ XP TRI	1
125	0910935	XBAR ASY HRDWR-XHD 5X5 CENTURY	1
126	0911237	ILLUM LEGEND ASSY RH LWR WLV	1
127	0911324	RH CTL STATION ASSY 5 WINCH WV	1
128	0911804	AIR REGULATOR-GAUGE ASSEMBLY	4
129	24773017	HOSE ASSEMBLY 140"LG	2
130	24773018	HOSE ASSEMBLY 140"LG	2
131	9010520	FITTING-ELBOW 1/4T-1/4NPT	5
132	9024041	SWITCH, ROCKER SPST RED 12V21A	22
133	9041402	1/2 NC X 1 1/4 HHCS PLT GR8	6
134	9041403	1/2 NC X 1 1/2 HHCS PL GR8	14
135	9402970	TOOLBOX MTG. PAD	14
136	942480011	PLATE,SLOT-SS REAR WASHER TBOX	16
137	AWS-6821-A	HOSE ASSY-PRESSURE	10
138	FC41	FITTING-90DEG BLKHD ELB W/ NUT	8
139	HC1291	FITTING, 4MJ-4MB STR THR	16

09009128 BASIC UNIT ASSEMBLY 1140 RXP KNEEBOOM (cont'd)

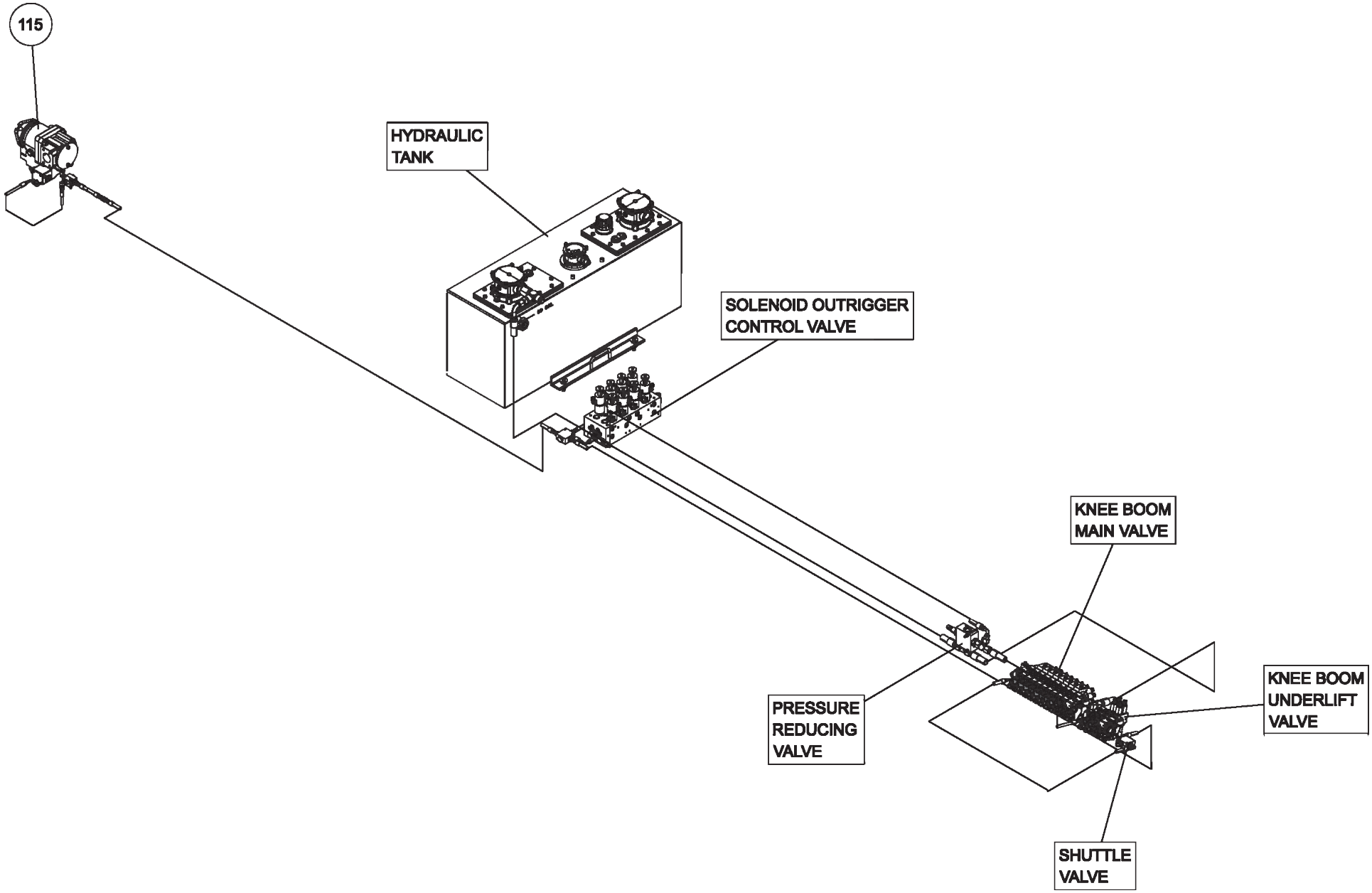

09009128 BASIC UNIT ASSEMBLY 1140 RXP KNEEBOOM (cont'd)

ITEM	PART NUMBER	DESCRIPTION	QTY
	09009128	BASIC UNIT ASSEMBLY 1140 RXP KB	
1	0300113	GREASE FITTING, 1/4-28 STR	1
2	03003419	HOSE, HYD 132" LG	1
3	03003420	HOSE, HYD 60" LG	1
4	03003421	HOSE, HYD 18"LG	3
5	03003424	HOSE, HYD 138"	1
6	03003425	HOSE, HYD 90" LG	4
7	03003426	HOSE, HYD 45" LG	6
8	0300364	CLAMP-HOSE,0.875"-2.75" 50"LBS	2
9	0300434	FITTING, HOSE BARB, 2	1
10	0300558	HOSE, SUCTION 2"ID 100R4 (C4)	1
11	0300835	KNOB-BOOM (UP-DOWN)	1
12	0300837	KNOB-BOOM (IN-OUT)	1
13	0300865	FITTING, CONNECTOR 8MJ-8MJ	5
14	0301113	HOSE HYD, 82"	2
15	0301207	HOSE HYD, 72"	4
16	0301377	FITTING, TEE,3/8" JIC	1
17	0301388	ELBOW, 8MJ-8MB90	3
18	0301422	FITTING, 6MJ-6MJ SMALL	4
19	0301473	HOSE HYD, 18" LG	2
20	0301522	ADAPTER, 6MJ-6MB	1
21	0301529	HOSE HYD, 58	2
22	03015922	STAUFF CLAMP, 3/8 TWIN	4
23	03016142	TUBE, HYD ASSY SF TO O/R	4
24	0301695	HOSE HYD, 91"	1
25	0301837	INLINE ORIFICE	4
26	0301909	RECEPTACLE BOOT	1
27	0301946	FITTING, BLKHD CONNECT	3
28	0301948	HD 7 WAY TRAILER CONNECT	1
29	0301961	BALL VALVE 2	1
30	0302056	HOSE HYD, 183"	5
31	0302205	GAUGE, FLUSH MNTG-6000 PSI	2
32	0302312	HOSE HYD, 43" LG 12G2AT	1
33	0302367	PIPE NIPPLE - 2 X 4	1
34	0302372	HOSE HYD, 240" LG	4
35	0302508	FITTING, ELL 8MJ-8MB 90LL	3
36	0302534	FITTING, 45 DEG ELBOW	2
37	0302604	HOSE HYD, 44"	2
38	0302632	HOSE HYD, 40"	8
39	0302805	HOSE HYD, 10"	1
40	0302856	KNOB-TILT, 3/8-16 THREAD	1
41	0302881	HOSE HYD, 45"	1
42	0303170	HOSE, HYD. 75"	1
43	0303340	HOSE HYD, 50" LG	1
44	0303379	KNOB, SWING CW - CCW	1
45	0303380	KNOB-UNDERLIFT (IN-OUT)	1
46	0303381	KNOB - UNDERLIFT (UP-DN)	1

ITEM	PART NUMBER	DESCRIPTION	QTY
47	0303391	HOSE 8AT2(8FJX-8FJ90) 110"	3
48	0303538	FITT, ADAPTER -BRASS 8FP-6MP	1
49	0303539	QUICK DISCONNECT 3/8 FPT	1
50	0303950	FITTING 45DEG DOT BRASS	1
51	0304363	QUICK DISCONNECT 1/2 FPT	2
52	0306537	EMERGENCY SWITCH	2
53	0306540	ROTARY SELECT SWITCH OPERATOR	12
54	0306870	HOSE HYDR - 96"	4
55	0306921	PIPE PLUG, 2" SQ HD	1
56	0307061	WINCH-35K dp 2-SP N.DRUM W/TEN	3
57	0307452	HOSE, HYD 146" LG	4
58	0307472	HOSE, HYD ASSY 24" LG	1
59	0307604	KNOB, RED LONG - SK0700-07	5
60	0310314	HOSE ASSY - 42" LG	4
61	0310456	PUSH BUTTN OPER W/MTG(RED) N/C	2
62	0310581	hose assy- 96" 8 fjx-10fjx90	4
63	0310637	PLUG, HOLE	2
64	0311191	ROLLER, POLY, 4" X 5/8"	2
65	0311305	T-BOLT CLAMP 1 3/8 TO 1 9/16	4
66	0311355	HOBBS HOURMETER	1
67	0311417	HOSE, 196" 3/8 2 X STRAIGHT	2
68	0311426	HOSE ASSY, 80" 4FJX-4FJX45	16
69	0311755	WATER SEPARATOR-MONNIER	1
70	0313129	HOSE, 1 SUCTION 16C4	34
71	0400005	SCREW, 6-32X1/2 PRH SS	6
72	0400012	LKWASHER, #8 SS	8
73	0400021	SCREW, 8-32X1/2 PRH SS	12
74	04000381	SS BHSCS 1/4-20 X 1	15
75	0400062	SCREW, 1/4-20X3/4 THC	3
76	0400066	SCREW, 1/4-20X3/4 HHC GR5	8
77	0400288	SCREW, 3/4-10X2-1/2 HHC GR8	16
78	0400307	SCREW, 7/8-9X4 HHC GR8	16
79	0400369	NUT, 1/4 SPR J	11
80	0400431	NUT, 3/4-10 LOK GR8	16
81	0400437	NUT, 7/8-9 LOK GR8	16
82	0400452	LKWASHER, 1/4	8
83	0400454	WASHER, 1/4 SS	2
84	0400473	WASHER, 7/8 PL GR8	16
85	0400489	WASHER, 3/4 SAE GR8	32
86	0400491	LKWASHER, 1/2	20
87	0400492	USS FLAT WASHER, 1/2	2
88	0400497	WASHER, 1/2 GR8	6
89	0400498	WASHER, 1/2X2X0.125	14
90	0400554	PIN, 3/8X1 SPR	3
91	0400900	NUT, 1/2-13 LOK JAM	2
92	0402020	SCREW, 1/4-20X3/4 HHC SS	2
93	0402021	SCREW, 1/4-20X1 HHC SS	13

ITEM	PART NUMBER	DESCRIPTION	QTY
94	0402044	SCREW, 3/8-16X1-1/2 HHC SS	8
95	0402080	WASHER, #8 SS	8
96	0402094	NUT, HEX 6-32 SS	6
97	0402110	WASHER, 1/4 SS	17
98	0402111	LKWASHER, 1/4 SS	30
99	0402113	NUT, 1/4-20 LOK SS	2
100	0402114	NUT, 1/4-20 LOK REV SS	11
101	0402120	WASHER, 3/8 SS	8
102	0402123	NUT, 3/8-16 LOK SS	8
103	07005922	MOUNT-HYD GAUGE	1
104	0712230	BOSS, TURNTABLE LOCK	4
105	0722104	ANGLE - WINCH MOUNTING	4
106	0724651	COVER	2
107	08005607	WINCH MOUNT, 35K FRONT	2
108	08005608	WINCH MOUNT, 35K REAR	2
109	0806994	HOUSE LOCK INDICATOR WELDMENT	4
110	0810433	HHU CHAIN ROLLER BRACKET, LH	1
111	0810434	HHU CHAIN ROLLER BRACKET, RH	1
112	09000097	ILLUMINATED LEGEND ASSY-LT UPP	1
113	09000135	ILLUMINATED LEGEND ASSY-RT UPP	1
114	09002247	CONTROL ASSY, 11 HANDLE WV	1
115	09002910	PUMP KIT, 4K KNEE BOOM	1
116	09002949	ILLUM LEGEND LT 1150 KNEE	1
117	09004266	U/L BOOM ASSEMBLY (SHORT)	1
118	09009470	SUBFRAME ASSY, 1140 RXP KB 12V	1
119	0906532	SWIVEL - BOOM ASSEMBLY	1
120	0908418	KIT-MUDFLAP CENTURY ROTATOR	1
121	0910231	BOOM ASSEMBLY 1140 (3-STAGE)	1
122	0910232	WRECKER FRAME ASSEMBLY - 1140	1
123	0910411	KIT - REAR OUTRGR 4-STG LG BOS	1
124	0910838	BUA '10 ROT AL BODY W/ XP TRI	1
125	0910935	XBAR ASY HRDWR-XHD 5X5 CENTURY	1
126	0911237	ILLUM LEGEND ASSY RH LWR WLV	1
127	0911324	RH CTL STATION ASSY 5 WINCH WV	1
128	0911804	AIR REGULATOR-GAUGE ASSEMBLY	4
129	24773017	HOSE ASSEMBLY 140"LG	2
130	24773018	HOSE ASSEMBLY 140"LG	2
131	9010520	FITTING-ELBOW 1/4T-1/4NPT	5
132	9024041	SWITCH, ROCKER SPST RED 12V21A	22
133	9041402	1/2 NC X 1 1/4 HHCS PLT GR8	6
134	9041403	1/2 NC X 1 1/2 HHCS PL GR8	14
135	9402970	TOOLBOX MTG. PAD	14
136	942480011	PLATE,SLOT-SS REAR WASHER TBOX	16
137	AWS-6821-A	HOSE ASSY-PRESSURE	10
138	FC41	FITTING-90DEG BLKHD ELB W/ NUT	8
139	HC1291	FITTING, 4MJ-4MB STR THR	16

09009128 BASIC UNIT ASSEMBLY 1140 RXP KNEEBOOM (cont'd)

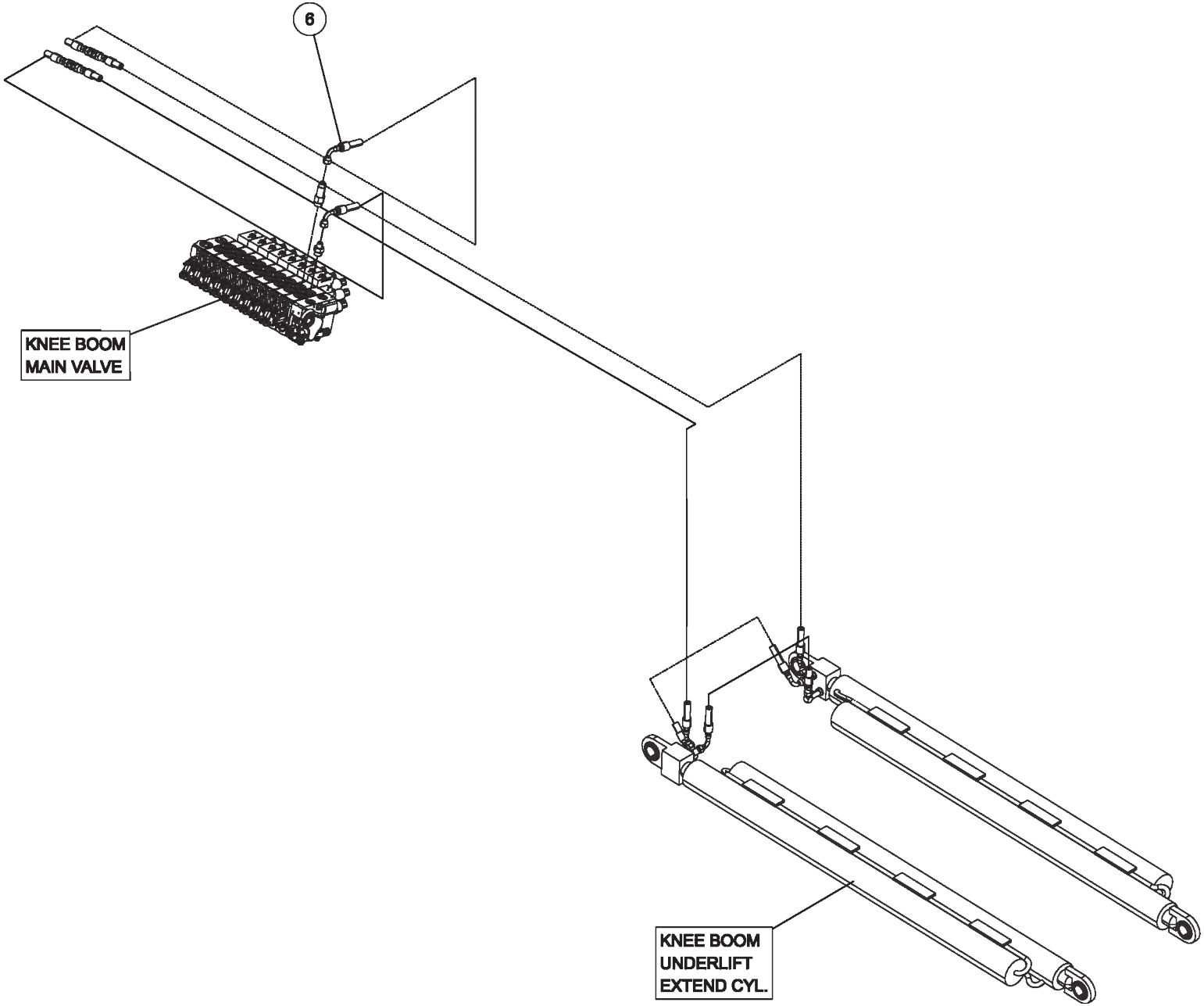

09009128 BASIC UNIT ASSEMBLY 1140 RXP KNEEBOOM (cont'd)

ITEM	PART NUMBER	DESCRIPTION	QTY
	09009128	BASIC UNIT ASSEMBLY 1140 RXP KB	
1	0300113	GREASE FITTING, 1/4-28 STR	1
2	03003419	HOSE, HYD 132" LG	1
3	03003420	HOSE, HYD 60" LG	1
4	03003421	HOSE, HYD 18"LG	3
5	03003424	HOSE, HYD 138"	1
6	03003425	HOSE, HYD 90" LG	4
7	03003426	HOSE, HYD 45" LG	6
8	0300364	CLAMP-HOSE,0.875"-2.75" 50"LBS	2
9	0300434	FITTING, HOSE BARB, 2	1
10	0300558	HOSE, SUCTION 2"ID 100R4 (C4)	1
11	0300835	KNOB-BOOM (UP-DOWN)	1
12	0300837	KNOB-BOOM (IN-OUT)	1
13	0300865	FITTING, CONNECTOR 8MJ-8MJ	5
14	0301113	HOSE HYD, 82"	2
15	0301207	HOSE HYD, 72"	4
16	0301377	FITTING, TEE,3/8" JIC	1
17	0301388	ELBOW, 8MJ-8MB90	3
18	0301422	FITTING, 6MJ-6MJ SMALL	4
19	0301473	HOSE HYD, 18" LG	2
20	0301522	ADAPTER, 6MJ-6MB	1
21	0301529	HOSE HYD, 58	2
22	03015922	STAUFF CLAMP, 3/8 TWIN	4
23	03016142	TUBE, HYD ASSY SF TO O/R	4
24	0301695	HOSE HYD, 91"	1
25	0301837	INLINE ORIFICE	4
26	0301909	RECEPTACLE BOOT	1
27	0301946	FITTING, BLKHD CONNECT	3
28	0301948	HD 7 WAY TRAILER CONNECT	1
29	0301961	BALL VALVE 2	1
30	0302056	HOSE HYD, 183"	5
31	0302205	GAUGE, FLUSH MNTG-6000 PSI	2
32	0302312	HOSE HYD, 43" LG 12G2AT	1
33	0302367	PIPE NIPPLE - 2 X 4	1
34	0302372	HOSE HYD, 240" LG	4
35	0302508	FITTING, ELL 8MJ-8MB 90LL	3
36	0302534	FITTING, 45 DEG ELBOW	2
37	0302604	HOSE HYD, 44"	2
38	0302632	HOSE HYD, 40"	8
39	0302805	HOSE HYD, 10"	1
40	0302856	KNOB-TILT, 3/8-16 THREAD	1
41	0302881	HOSE HYD, 45"	1
42	0303170	HOSE, HYD. 75"	1
43	0303340	HOSE HYD, 50" LG	1
44	0303379	KNOB, SWING CW - CCW	1
45	0303380	KNOB-UNDERLIFT (IN-OUT)	1
46	0303381	KNOB - UNDERLIFT (UP-DN)	1

ITEM	PART NUMBER	DESCRIPTION	QTY
47	0303391	HOSE 8AT2(8FJX-8FJ90) 110"	3
48	0303538	FITT, ADAPTER -BRASS 8FP-6MP	1
49	0303539	QUICK DISCONNECT 3/8 FPT	1
50	0303950	FITTING 45DEG DOT BRASS	1
51	0304363	QUICK DISCONNECT 1/2 FPT	2
52	0306537	EMERGENCY SWITCH	2
53	0306540	ROTARY SELECT SWITCH OPERATOR	12
54	0306870	HOSE HYDR - 96"	4
55	0306921	PIPE PLUG, 2" SQ HD	1
56	0307061	WINCH-35K dp 2-SP N.DRUM W/TEN	3
57	0307452	HOSE, HYD 146" LG	4
58	0307472	HOSE, HYD ASSY 24" LG	1
59	0307604	KNOB, RED LONG - SK0700-07	5
60	0310314	HOSE ASSY - 42" LG	4
61	0310456	PUSH BUTTN OPER W/MTG(RED) N/C	2
62	0310581	hose assy- 96" 8 fjx-10fjx90	4
63	0310637	PLUG, HOLE	2
64	0311191	ROLLER, POLY, 4" X 5/8"	2
65	0311305	T-BOLT CLAMP 1 3/8 TO 1 9/16	4
66	0311355	HOBBS HOURMETER	1
67	0311417	HOSE, 196" 3/8 2 X STRAIGHT	2
68	0311426	HOSE ASSY, 80" 4FJX-4FJX45	16
69	0311755	WATER SEPARATOR-MONNIER	1
70	0313129	HOSE, 1 SUCTION 16C4	34
71	0400005	SCREW, 6-32X1/2 PRH SS	6
72	0400012	LKWASHER, #8 SS	8
73	0400021	SCREW, 8-32X1/2 PRH SS	12
74	04000381	SS BHSCS 1/4-20 X 1	15
75	0400062	SCREW, 1/4-20X3/4 THC	3
76	0400066	SCREW, 1/4-20X3/4 HHC GR5	8
77	0400288	SCREW, 3/4-10X2-1/2 HHC GR8	16
78	0400307	SCREW, 7/8-9X4 HHC GR8	16
79	0400369	NUT, 1/4 SPR J	11
80	0400431	NUT, 3/4-10 LOK GR8	16
81	0400437	NUT, 7/8-9 LOK GR8	16
82	0400452	LKWASHER, 1/4	8
83	0400454	WASHER, 1/4 SS	2
84	0400473	WASHER, 7/8 PL GR8	16
85	0400489	WASHER, 3/4 SAE GR8	32
86	0400491	LKWASHER, 1/2	20
87	0400492	USS FLAT WASHER, 1/2	2
88	0400497	WASHER, 1/2 GR8	6
89	0400498	WASHER, 1/2X2X0.125	14
90	0400554	PIN, 3/8X1 SPR	3
91	0400900	NUT, 1/2-13 LOK JAM	2
92	0402020	SCREW, 1/4-20X3/4 HHC SS	2
93	0402021	SCREW, 1/4-20X1 HHC SS	13

ITEM	PART NUMBER	DESCRIPTION	QTY
94	0402044	SCREW, 3/8-16X1-1/2 HHC SS	8
95	0402080	WASHER, #8 SS	8
96	0402094	NUT, HEX 6-32 SS	6
97	0402110	WASHER, 1/4 SS	17
98	0402111	LKWASHER, 1/4 SS	30
99	0402113	NUT, 1/4-20 LOK SS	2
100	0402114	NUT, 1/4-20 LOK REV SS	11
101	0402120	WASHER, 3/8 SS	8
102	0402123	NUT, 3/8-16 LOK SS	8
103	07005922	MOUNT-HYD GAUGE	1
104	0712230	BOSS, TURNTABLE LOCK	4
105	0722104	ANGLE - WINCH MOUNTING	4
106	0724651	COVER	2
107	08005607	WINCH MOUNT, 35K FRONT	2
108	08005608	WINCH MOUNT, 35K REAR	2
109	0806994	HOUSE LOCK INDICATOR WELDMENT	4
110	0810433	HHU CHAIN ROLLER BRACKET, LH	1
111	0810434	HHU CHAIN ROLLER BRACKET, RH	1
112	09000097	ILLUMINATED LEGEND ASSY-LT UPP	1
113	09000135	ILLUMINATED LEGEND ASSY-RT UPP	1
114	09002247	CONTROL ASSY, 11 HANDLE WV	1
115	09002910	PUMP KIT, 4K KNEE BOOM	1
116	09002949	ILLUM LEGEND LT 1150 KNEE	1
117	09004266	U/L BOOM ASSEMBLY (SHORT)	1
118	09009470	SUBFRAME ASSY, 1140 RXP KB 12V	1
119	0906532	SWIVEL - BOOM ASSEMBLY	1
120	0908418	KIT-MUDFLAP CENTURY ROTATOR	1
121	0910231	BOOM ASSEMBLY 1140 (3-STAGE)	1
122	0910232	WRECKER FRAME ASSEMBLY - 1140	1
123	0910411	KIT - REAR OUTRGR 4-STG LG BOS	1
124	0910838	BUA '10 ROT AL BODY W/ XP TRI	1
125	0910935	XBAR ASY HRDWR-XHD 5X5 CENTURY	1
126	0911237	ILLUM LEGEND ASSY RH LWR WLV	1
127	0911324	RH CTL STATION ASSY 5 WINCH WV	1
128	0911804	AIR REGULATOR-GAUGE ASSEMBLY	4
129	24773017	HOSE ASSEMBLY 140"LG	2
130	24773018	HOSE ASSEMBLY 140"LG	2
131	9010520	FITTING-ELBOW 1/4T-1/4NPT	5
132	9024041	SWITCH, ROCKER SPST RED 12V21A	22
133	9041402	1/2 NC X 1 1/4 HHCS PLT GR8	6
134	9041403	1/2 NC X 1 1/2 HHCS PL GR8	14
135	9402970	TOOLBOX MTG. PAD	14
136	942480011	PLATE,SLOT-SS REAR WASHER TBOX	16
137	AWS-6821-A	HOSE ASSY-PRESSURE	10
138	FC41	FITTING-90DEG BLKHD ELB W/ NUT	8
139	HC1291	FITTING, 4MJ-4MB STR THR	16

09009128 BASIC UNIT ASSEMBLY 1140 RXP KNEEBOOM (cont'd)

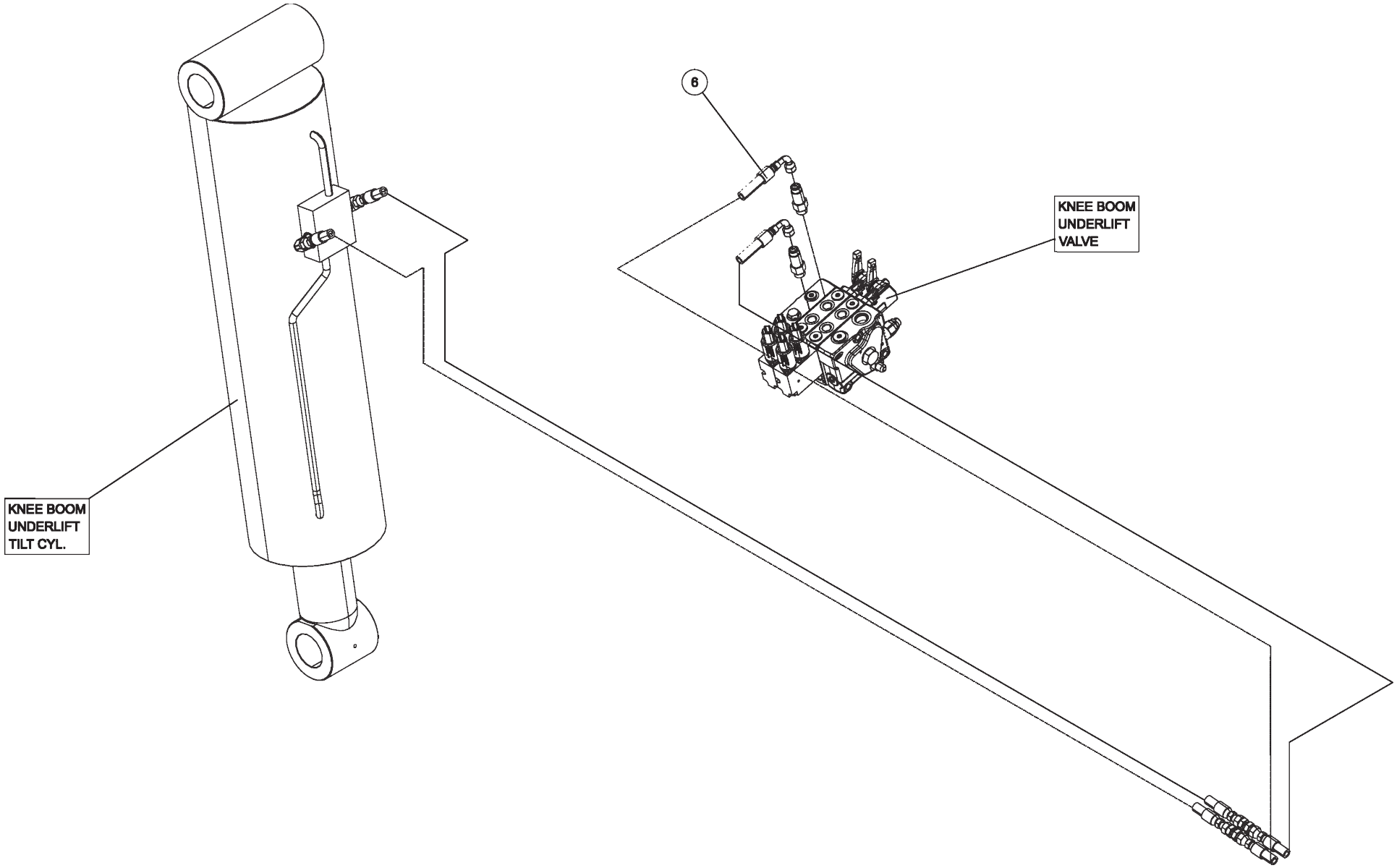

09009128 BASIC UNIT ASSEMBLY 1140 RXP KNEEBOOM (cont'd)

ITEM	PART NUMBER	DESCRIPTION	QTY
	09009128	BASIC UNIT ASSEMBLY 1140 RXP KB	
1	0300113	GREASE FITTING, 1/4-28 STR	1
2	03003419	HOSE, HYD 132" LG	1
3	03003420	HOSE, HYD 60" LG	1
4	03003421	HOSE, HYD 18"LG	3
5	03003424	HOSE, HYD 138"	1
6	03003425	HOSE, HYD 90" LG	4
7	03003426	HOSE, HYD 45" LG	6
8	0300364	CLAMP-HOSE,0.875"-2.75" 50"LBS	2
9	0300434	FITTING, HOSE BARB, 2	1
10	0300558	HOSE, SUCTION 2"ID 100R4 (C4)	1
11	0300835	KNOB-BOOM (UP-DOWN)	1
12	0300837	KNOB-BOOM (IN-OUT)	1
13	0300865	FITTING, CONNECTOR 8MJ-8MJ	5
14	0301113	HOSE HYD, 82"	2
15	0301207	HOSE HYD, 72"	4
16	0301377	FITTING, TEE,3/8" JIC	1
17	0301388	ELBOW, 8MJ-8MB90	3
18	0301422	FITTING, 6MJ-6MJ SMALL	4
19	0301473	HOSE HYD, 18" LG	2
20	0301522	ADAPTER, 6MJ-6MB	1
21	0301529	HOSE HYD, 58	2
22	03015922	STAUFF CLAMP, 3/8 TWIN	4
23	03016142	TUBE, HYD ASSY SF TO O/R	4
24	0301695	HOSE HYD, 91"	1
25	0301837	INLINE ORIFICE	4
26	0301909	RECEPTACLE BOOT	1
27	0301946	FITTING, BLKHD CONNECT	3
28	0301948	HD 7 WAY TRAILER CONNECT	1
29	0301961	BALL VALVE 2	1
30	0302056	HOSE HYD, 183"	5
31	0302205	GAUGE, FLUSH MNTG-6000 PSI	2
32	0302312	HOSE HYD, 43" LG 12G2AT	1
33	0302367	PIPE NIPPLE - 2 X 4	1
34	0302372	HOSE HYD, 240" LG	4
35	0302508	FITTING, ELL 8MJ-8MB 90LL	3
36	0302534	FITTING, 45 DEG ELBOW	2
37	0302604	HOSE HYD, 44"	2
38	0302632	HOSE HYD, 40"	8
39	0302805	HOSE HYD, 10"	1
40	0302856	KNOB-TILT, 3/8-16 THREAD	1
41	0302881	HOSE HYD, 45"	1
42	0303170	HOSE, HYD. 75"	1
43	0303340	HOSE HYD, 50" LG	1
44	0303379	KNOB, SWING CW - CCW	1
45	0303380	KNOB-UNDERLIFT (IN-OUT)	1
46	0303381	KNOB - UNDERLIFT (UP-DN)	1

ITEM	PART NUMBER	DESCRIPTION	QTY
47	0303391	HOSE 8AT2(8FJX-8FJ90) 110"	3
48	0303538	FITT, ADAPTER -BRASS 8FP-6MP	1
49	0303539	QUICK DISCONNECT 3/8 FPT	1
50	0303950	FITTING 45DEG DOT BRASS	1
51	0304363	QUICK DISCONNECT 1/2 FPT	2
52	0306537	EMERGENCY SWITCH	2
53	0306540	ROTARY SELECT SWITCH OPERATOR	12
54	0306870	HOSE HYDR - 96"	4
55	0306921	PIPE PLUG, 2" SQ HD	1
56	0307061	WINCH-35K dp 2-SP N.DRUM W/TEN	3
57	0307452	HOSE, HYD 146" LG	4
58	0307472	HOSE, HYD ASSY 24" LG	1
59	0307604	KNOB, RED LONG - SK0700-07	5
60	0310314	HOSE ASSY - 42" LG	4
61	0310456	PUSH BUTTN OPER W/MTG(RED) N/C	2
62	0310581	hose assy- 96" 8 fjx-10fjx90	4
63	0310637	PLUG, HOLE	2
64	0311191	ROLLER, POLY, 4" X 5/8"	2
65	0311305	T-BOLT CLAMP 1 3/8 TO 1 9/16	4
66	0311355	HOBBS HOURMETER	1
67	0311417	HOSE, 196" 3/8 2 X STRAIGHT	2
68	0311426	HOSE ASSY, 80" 4FJX-4FJX45	16
69	0311755	WATER SEPARATOR-MONNIER	1
70	0313129	HOSE, 1 SUCTION 16C4	34
71	0400005	SCREW, 6-32X1/2 PRH SS	6
72	0400012	LKWASHER, #8 SS	8
73	0400021	SCREW, 8-32X1/2 PRH SS	12
74	04000381	SS BHSCS 1/4-20 X 1	15
75	0400062	SCREW, 1/4-20X3/4 THC	3
76	0400066	SCREW, 1/4-20X3/4 HHC GR5	8
77	0400288	SCREW, 3/4-10X2-1/2 HHC GR8	16
78	0400307	SCREW, 7/8-9X4 HHC GR8	16
79	0400369	NUT, 1/4 SPR J	11
80	0400431	NUT, 3/4-10 LOK GR8	16
81	0400437	NUT, 7/8-9 LOK GR8	16
82	0400452	LKWASHER, 1/4	8
83	0400454	WASHER, 1/4 SS	2
84	0400473	WASHER, 7/8 PL GR8	16
85	0400489	WASHER, 3/4 SAE GR8	32
86	0400491	LKWASHER, 1/2	20
87	0400492	USS FLAT WASHER, 1/2	2
88	0400497	WASHER, 1/2 GR8	6
89	0400498	WASHER, 1/2X2X0.125	14
90	0400554	PIN, 3/8X1 SPR	3
91	0400900	NUT, 1/2-13 LOK JAM	2
92	0402020	SCREW, 1/4-20X3/4 HHC SS	2
93	0402021	SCREW, 1/4-20X1 HHC SS	13

ITEM	PART NUMBER	DESCRIPTION	QTY
94	0402044	SCREW, 3/8-16X1-1/2 HHC SS	8
95	0402080	WASHER, #8 SS	8
96	0402094	NUT, HEX 6-32 SS	6
97	0402110	WASHER, 1/4 SS	17
98	0402111	LKWASHER, 1/4 SS	30
99	0402113	NUT, 1/4-20 LOK SS	2
100	0402114	NUT, 1/4-20 LOK REV SS	11
101	0402120	WASHER, 3/8 SS	8
102	0402123	NUT, 3/8-16 LOK SS	8
103	07005922	MOUNT-HYD GAUGE	1
104	0712230	BOSS, TURNTABLE LOCK	4
105	0722104	ANGLE - WINCH MOUNTING	4
106	0724651	COVER	2
107	08005607	WINCH MOUNT, 35K FRONT	2
108	08005608	WINCH MOUNT, 35K REAR	2
109	0806994	HOUSE LOCK INDICATOR WELDMENT	4
110	0810433	HHU CHAIN ROLLER BRACKET, LH	1
111	0810434	HHU CHAIN ROLLER BRACKET, RH	1
112	09000097	ILLUMINATED LEGEND ASSY-LT UPP	1
113	09000135	ILLUMINATED LEGEND ASSY-RT UPP	1
114	09002247	CONTROL ASSY, 11 HANDLE WV	1
115	09002910	PUMP KIT, 4K KNEE BOOM	1
116	09002949	ILLUM LEGEND LT 1150 KNEE	1
117	09004266	U/L BOOM ASSEMBLY (SHORT)	1
118	09009470	SUBFRAME ASSY, 1140 RXP KB 12V	1
119	0906532	SWIVEL - BOOM ASSEMBLY	1
120	0908418	KIT-MUDFLAP CENTURY ROTATOR	1
121	0910231	BOOM ASSEMBLY 1140 (3-STAGE)	1
122	0910232	WRECKER FRAME ASSEMBLY - 1140	1
123	0910411	KIT - REAR OUTRGR 4-STG LG BOS	1
124	0910838	BUA '10 ROT AL BODY W/ XP TRI	1
125	0910935	XBAR ASY HRDWR-XHD 5X5 CENTURY	1
126	0911237	ILLUM LEGEND ASSY RH LWR WLV	1
127	0911324	RH CTL STATION ASSY 5 WINCH WV	1
128	0911804	AIR REGULATOR-GAUGE ASSEMBLY	4
129	24773017	HOSE ASSEMBLY 140"LG	2
130	24773018	HOSE ASSEMBLY 140"LG	2
131	9010520	FITTING-ELBOW 1/4T-1/4NPT	5
132	9024041	SWITCH, ROCKER SPST RED 12V21A	22
133	9041402	1/2 NC X 1 1/4 HHCS PLT GR8	6
134	9041403	1/2 NC X 1 1/2 HHCS PL GR8	14
135	9402970	TOOLBOX MTG. PAD	14
136	942480011	PLATE,SLOT-SS REAR WASHER TBOX	16
137	AWS-6821-A	HOSE ASSY-PRESSURE	10
138	FC41	FITTING-90DEG BLKHD ELB W/ NUT	8
139	HC1291	FITTING, 4MJ-4MB STR THR	16

09009128 BASIC UNIT ASSEMBLY 1140 RXP KNEEBOOM (cont'd)

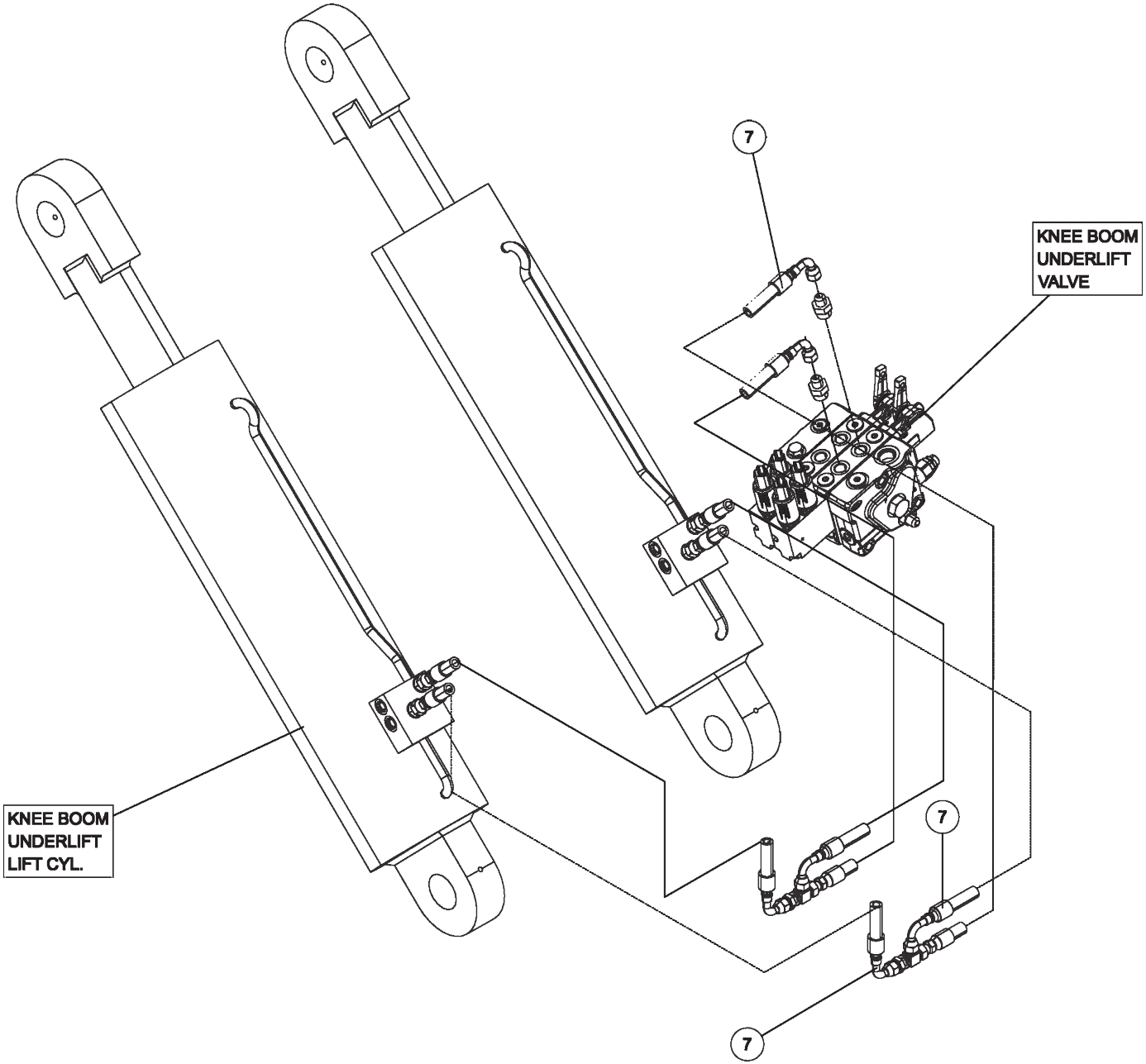

09009128 BASIC UNIT ASSEMBLY 1140 RXP KNEEBOOM (cont'd)

ITEM	PART NUMBER	DESCRIPTION	QTY
	09009128	BASIC UNIT ASSEMBLY 1140 RXP KB	
1	0300113	GREASE FITTING, 1/4-28 STR	1
2	03003419	HOSE, HYD 132" LG	1
3	03003420	HOSE, HYD 60" LG	1
4	03003421	HOSE, HYD 18"LG	3
5	03003424	HOSE, HYD 138"	1
6	03003425	HOSE, HYD 90" LG	4
7	03003426	HOSE, HYD 45" LG	6
8	0300364	CLAMP-HOSE,0.875"-2.75" 50"LBS	2
9	0300434	FITTING, HOSE BARB, 2	1
10	0300558	HOSE, SUCTION 2"ID 100R4 (C4)	1
11	0300835	KNOB-BOOM (UP-DOWN)	1
12	0300837	KNOB-BOOM (IN-OUT)	1
13	0300865	FITTING, CONNECTOR 8MJ-8MJ	5
14	0301113	HOSE HYD, 82"	2
15	0301207	HOSE HYD, 72"	4
16	0301377	FITTING, TEE,3/8" JIC	1
17	0301388	ELBOW, 8MJ-8MB90	3
18	0301422	FITTING, 6MJ-6MJ SMALL	4
19	0301473	HOSE HYD, 18" LG	2
20	0301522	ADAPTER, 6MJ-6MB	1
21	0301529	HOSE HYD, 58	2
22	03015922	STAUFF CLAMP, 3/8 TWIN	4
23	03016142	TUBE, HYD ASSY SF TO O/R	4
24	0301695	HOSE HYD, 91"	1
25	0301837	INLINE ORIFICE	4
26	0301909	RECEPTACLE BOOT	1
27	0301946	FITTING, BLKHD CONNECT	3
28	0301948	HD 7 WAY TRAILER CONNECT	1
29	0301961	BALL VALVE 2	1
30	0302056	HOSE HYD, 183"	5
31	0302205	GAUGE, FLUSH MNTG-6000 PSI	2
32	0302312	HOSE HYD, 43" LG 12G2AT	1
33	0302367	PIPE NIPPLE - 2 X 4	1
34	0302372	HOSE HYD, 240" LG	4
35	0302508	FITTING, ELL 8MJ-8MB 90LL	3
36	0302534	FITTING, 45 DEG ELBOW	2
37	0302604	HOSE HYD, 44"	2
38	0302632	HOSE HYD, 40"	8
39	0302805	HOSE HYD, 10"	1
40	0302856	KNOB-TILT, 3/8-16 THREAD	1
41	0302881	HOSE HYD, 45"	1
42	0303170	HOSE, HYD. 75"	1
43	0303340	HOSE HYD, 50" LG	1
44	0303379	KNOB, SWING CW - CCW	1
45	0303380	KNOB-UNDERLIFT (IN-OUT)	1
46	0303381	KNOB - UNDERLIFT (UP-DN)	1

ITEM	PART NUMBER	DESCRIPTION	QTY
47	0303391	HOSE 8AT2(8FJX-8FJ90) 110"	3
48	0303538	FITT, ADAPTER -BRASS 8FP-6MP	1
49	0303539	QUICK DISCONNECT 3/8 FPT	1
50	0303950	FITTING 45DEG DOT BRASS	1
51	0304363	QUICK DISCONNECT 1/2 FPT	2
52	0306537	EMERGENCY SWITCH	2
53	0306540	ROTARY SELECT SWITCH OPERATOR	12
54	0306870	HOSE HYDR - 96"	4
55	0306921	PIPE PLUG, 2" SQ HD	1
56	0307061	WINCH-35K dp 2-SP N.DRUM W/TEN	3
57	0307452	HOSE, HYD 146" LG	4
58	0307472	HOSE, HYD ASSY 24" LG	1
59	0307604	KNOB, RED LONG - SK0700-07	5
60	0310314	HOSE ASSY - 42" LG	4
61	0310456	PUSH BUTTN OPER W/MTG(RED) N/C	2
62	0310581	hose assy- 96" 8 fjx-10fjx90	4
63	0310637	PLUG, HOLE	2
64	0311191	ROLLER, POLY, 4" X 5/8"	2
65	0311305	T-BOLT CLAMP 1 3/8 TO 1 9/16	4
66	0311355	HOBBS HOURMETER	1
67	0311417	HOSE, 196" 3/8 2 X STRAIGHT	2
68	0311426	HOSE ASSY, 80" 4FJX-4FJX45	16
69	0311755	WATER SEPARATOR-MONNIER	1
70	0313129	HOSE, 1 SUCTION 16C4	34
71	0400005	SCREW, 6-32X1/2 PRH SS	6
72	0400012	LKWASHER, #8 SS	8
73	0400021	SCREW, 8-32X1/2 PRH SS	12
74	04000381	SS BHSCS 1/4-20 X 1	15
75	0400062	SCREW, 1/4-20X3/4 THC	3
76	0400066	SCREW, 1/4-20X3/4 HHC GR5	8
77	0400288	SCREW, 3/4-10X2-1/2 HHC GR8	16
78	0400307	SCREW, 7/8-9X4 HHC GR8	16
79	0400369	NUT, 1/4 SPR J	11
80	0400431	NUT, 3/4-10 LOK GR8	16
81	0400437	NUT, 7/8-9 LOK GR8	16
82	0400452	LKWASHER, 1/4	8
83	0400454	WASHER, 1/4 SS	2
84	0400473	WASHER, 7/8 PL GR8	16
85	0400489	WASHER, 3/4 SAE GR8	32
86	0400491	LKWASHER, 1/2	20
87	0400492	USS FLAT WASHER, 1/2	2
88	0400497	WASHER, 1/2 GR8	6
89	0400498	WASHER, 1/2X2X0.125	14
90	0400554	PIN, 3/8X1 SPR	3
91	0400900	NUT, 1/2-13 LOK JAM	2
92	0402020	SCREW, 1/4-20X3/4 HHC SS	2
93	0402021	SCREW, 1/4-20X1 HHC SS	13

ITEM	PART NUMBER	DESCRIPTION	QTY
94	0402044	SCREW, 3/8-16X1-1/2 HHC SS	8
95	0402080	WASHER, #8 SS	8
96	0402094	NUT, HEX 6-32 SS	6
97	0402110	WASHER, 1/4 SS	17
98	0402111	LKWASHER, 1/4 SS	30
99	0402113	NUT, 1/4-20 LOK SS	2
100	0402114	NUT, 1/4-20 LOK REV SS	11
101	0402120	WASHER, 3/8 SS	8
102	0402123	NUT, 3/8-16 LOK SS	8
103	07005922	MOUNT-HYD GAUGE	1
104	0712230	BOSS, TURNTABLE LOCK	4
105	0722104	ANGLE - WINCH MOUNTING	4
106	0724651	COVER	2
107	08005607	WINCH MOUNT, 35K FRONT	2
108	08005608	WINCH MOUNT, 35K REAR	2
109	0806994	HOUSE LOCK INDICATOR WELDMENT	4
110	0810433	HHU CHAIN ROLLER BRACKET, LH	1
111	0810434	HHU CHAIN ROLLER BRACKET, RH	1
112	09000097	ILLUMINATED LEGEND ASSY-LT UPP	1
113	09000135	ILLUMINATED LEGEND ASSY-RT UPP	1
114	09002247	CONTROL ASSY, 11 HANDLE WV	1
115	09002910	PUMP KIT, 4K KNEE BOOM	1
116	09002949	ILLUM LEGEND LT 1150 KNEE	1
117	09004266	U/L BOOM ASSEMBLY (SHORT)	1
118	09009470	SUBFRAME ASSY, 1140 RXP KB 12V	1
119	0906532	SWIVEL - BOOM ASSEMBLY	1
120	0908418	KIT-MUDFLAP CENTURY ROTATOR	1
121	0910231	BOOM ASSEMBLY 1140 (3-STAGE)	1
122	0910232	WRECKER FRAME ASSEMBLY - 1140	1
123	0910411	KIT - REAR OUTRGR 4-STG LG BOS	1
124	0910838	BUA '10 ROT AL BODY W/ XP TRI	1
125	0910935	XBAR ASY HRDWR-XHD 5X5 CENTURY	1
126	0911237	ILLUM LEGEND ASSY RH LWR WLV	1
127	0911324	RH CTL STATION ASSY 5 WINCH WV	1
128	0911804	AIR REGULATOR-GAUGE ASSEMBLY	4
129	24773017	HOSE ASSEMBLY 140"LG	2
130	24773018	HOSE ASSEMBLY 140"LG	2
131	9010520	FITTING-ELBOW 1/4T-1/4NPT	5
132	9024041	SWITCH, ROCKER SPST RED 12V21A	22
133	9041402	1/2 NC X 1 1/4 HHCS PLT GR8	6
134	9041403	1/2 NC X 1 1/2 HHCS PL GR8	14
135	9402970	TOOLBOX MTG. PAD	14
136	942480011	PLATE,SLOT-SS REAR WASHER TBOX	16
137	AWS-6821-A	HOSE ASSY-PRESSURE	10
138	FC41	FITTING-90DEG BLKHD ELB W/ NUT	8
139	HC1291	FITTING, 4MJ-4MB STR THR	16

09009128 BASIC UNIT ASSEMBLY 1140 RXP KNEEBOOM (cont'd)

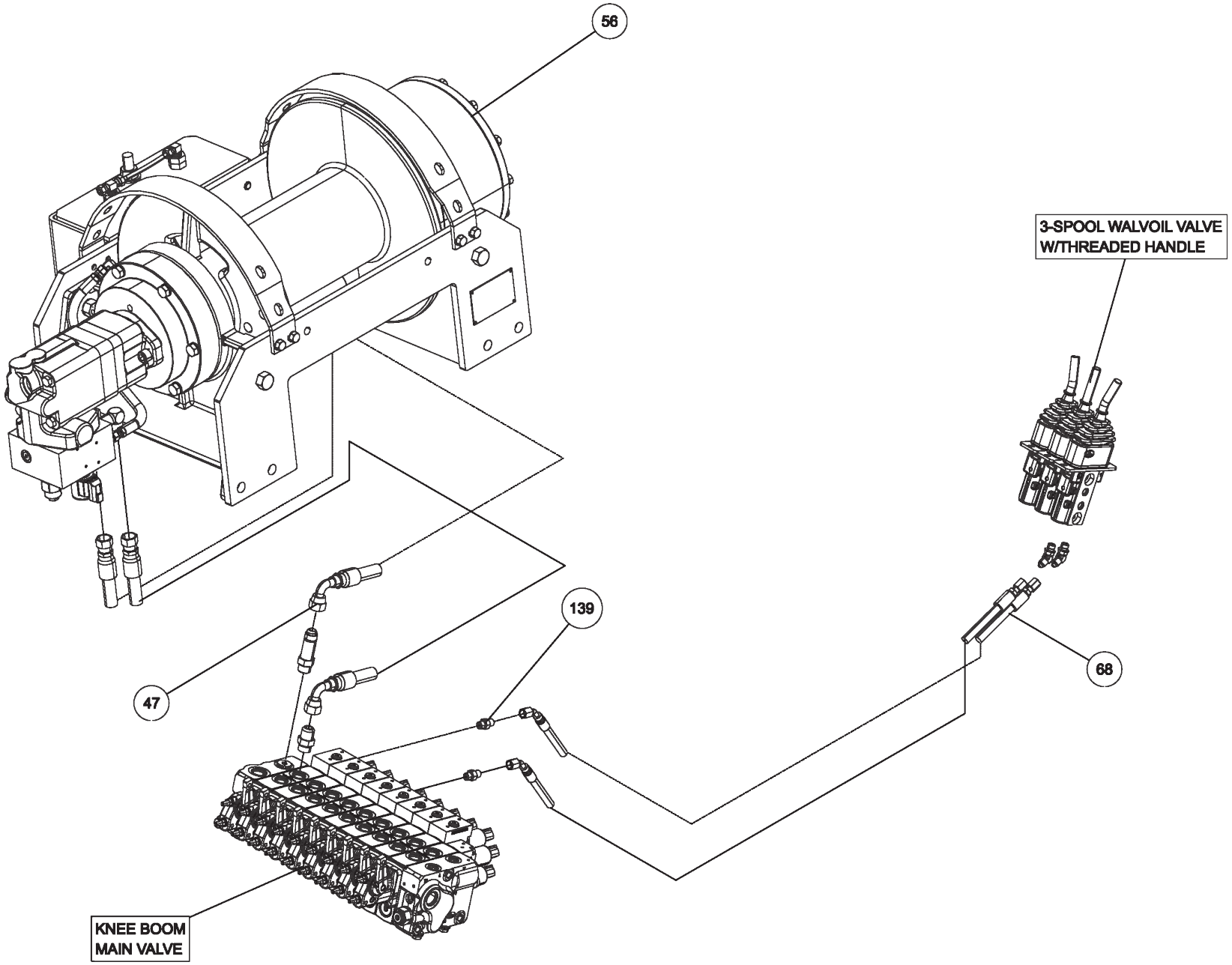

09009128 BASIC UNIT ASSEMBLY 1140 RXP KNEEBOOM (cont'd)

ITEM	PART NUMBER	DESCRIPTION	QTY
	09009128	BASIC UNIT ASSEMBLY 1140 RXP KB	
1	0300113	GREASE FITTING, 1/4-28 STR	1
2	03003419	HOSE, HYD 132" LG	1
3	03003420	HOSE, HYD 60" LG	1
4	03003421	HOSE, HYD 18"LG	3
5	03003424	HOSE, HYD 138"	1
6	03003425	HOSE, HYD 90" LG	4
7	03003426	HOSE, HYD 45" LG	6
8	0300364	CLAMP-HOSE,0.875"-2.75" 50"LBS	2
9	0300434	FITTING, HOSE BARB, 2	1
10	0300558	HOSE, SUCTION 2"ID 100R4 (C4)	1
11	0300835	KNOB-BOOM (UP-DOWN)	1
12	0300837	KNOB-BOOM (IN-OUT)	1
13	0300865	FITTING, CONNECTOR 8MJ-8MJ	5
14	0301113	HOSE HYD, 82"	2
15	0301207	HOSE HYD, 72"	4
16	0301377	FITTING, TEE,3/8" JIC	1
17	0301388	ELBOW, 8MJ-8MB90	3
18	0301422	FITTING, 6MJ-6MJ SMALL	4
19	0301473	HOSE HYD, 18" LG	2
20	0301522	ADAPTER, 6MJ-6MB	1
21	0301529	HOSE HYD, 58	2
22	03015922	STAUFF CLAMP, 3/8 TWIN	4
23	03016142	TUBE, HYD ASSY SF TO O/R	4
24	0301695	HOSE HYD, 91"	1
25	0301837	INLINE ORIFICE	4
26	0301909	RECEPTACLE BOOT	1
27	0301946	FITTING, BLKHD CONNECT	3
28	0301948	HD 7 WAY TRAILER CONNECT	1
29	0301961	BALL VALVE 2	1
30	0302056	HOSE HYD, 183"	5
31	0302205	GAUGE, FLUSH MNTG-6000 PSI	2
32	0302312	HOSE HYD, 43" LG 12G2AT	1
33	0302367	PIPE NIPPLE - 2 X 4	1
34	0302372	HOSE HYD, 240" LG	4
35	0302508	FITTING, ELL 8MJ-8MB 90LL	3
36	0302534	FITTING, 45 DEG ELBOW	2
37	0302604	HOSE HYD, 44"	2
38	0302632	HOSE HYD, 40"	8
39	0302805	HOSE HYD, 10"	1
40	0302856	KNOB-TILT, 3/8-16 THREAD	1
41	0302881	HOSE HYD, 45"	1
42	0303170	HOSE, HYD. 75"	1
43	0303340	HOSE HYD, 50" LG	1
44	0303379	KNOB, SWING CW - CCW	1
45	0303380	KNOB-UNDERLIFT (IN-OUT)	1
46	0303381	KNOB - UNDERLIFT (UP-DN)	1

ITEM	PART NUMBER	DESCRIPTION	QTY
47	0303391	HOSE 8AT2(8FJX-8FJ90) 110"	3
48	0303538	FITT, ADAPTER -BRASS 8FP-6MP	1
49	0303539	QUICK DISCONNECT 3/8 FPT	1
50	0303950	FITTING 45DEG DOT BRASS	1
51	0304363	QUICK DISCONNECT 1/2 FPT	2
52	0306537	EMERGENCY SWITCH	2
53	0306540	ROTARY SELECT SWITCH OPERATOR	12
54	0306870	HOSE HYDR - 96"	4
55	0306921	PIPE PLUG, 2" SQ HD	1
56	0307061	WINCH-35K dp 2-SP N.DRUM W/TEN	3
57	0307452	HOSE, HYD 146" LG	4
58	0307472	HOSE, HYD ASSY 24" LG	1
59	0307604	KNOB, RED LONG - SK0700-07	5
60	0310314	HOSE ASSY - 42" LG	4
61	0310456	PUSH BUTTN OPER W/MTG(RED) N/C	2
62	0310581	hose assy- 96" 8 fjx-10fjx90	4
63	0310637	PLUG, HOLE	2
64	0311191	ROLLER, POLY, 4" X 5/8"	2
65	0311305	T-BOLT CLAMP 1 3/8 TO 1 9/16	4
66	0311355	HOBBS HOURMETER	1
67	0311417	HOSE, 196" 3/8 2 X STRAIGHT	2
68	0311426	HOSE ASSY, 80" 4FJX-4FJX45	16
69	0311755	WATER SEPARATOR-MONNIER	1
70	0313129	HOSE, 1 SUCTION 16C4	34
71	0400005	SCREW, 6-32X1/2 PRH SS	6
72	0400012	LKWASHER, #8 SS	8
73	0400021	SCREW, 8-32X1/2 PRH SS	12
74	04000381	SS BHSCS 1/4-20 X 1	15
75	0400062	SCREW, 1/4-20X3/4 THC	3
76	0400066	SCREW, 1/4-20X3/4 HHC GR5	8
77	0400288	SCREW, 3/4-10X2-1/2 HHC GR8	16
78	0400307	SCREW, 7/8-9X4 HHC GR8	16
79	0400369	NUT, 1/4 SPR J	11
80	0400431	NUT, 3/4-10 LOK GR8	16
81	0400437	NUT, 7/8-9 LOK GR8	16
82	0400452	LKWASHER, 1/4	8
83	0400454	WASHER, 1/4 SS	2
84	0400473	WASHER, 7/8 PL GR8	16
85	0400489	WASHER, 3/4 SAE GR8	32
86	0400491	LKWASHER, 1/2	20
87	0400492	USS FLAT WASHER, 1/2	2
88	0400497	WASHER, 1/2 GR8	6
89	0400498	WASHER, 1/2X2X0.125	14
90	0400554	PIN, 3/8X1 SPR	3
91	0400900	NUT, 1/2-13 LOK JAM	2
92	0402020	SCREW, 1/4-20X3/4 HHC SS	2
93	0402021	SCREW, 1/4-20X1 HHC SS	13

ITEM	PART NUMBER	DESCRIPTION	QTY
94	0402044	SCREW, 3/8-16X1-1/2 HHC SS	8
95	0402080	WASHER, #8 SS	8
96	0402094	NUT, HEX 6-32 SS	6
97	0402110	WASHER, 1/4 SS	17
98	0402111	LKWASHER, 1/4 SS	30
99	0402113	NUT, 1/4-20 LOK SS	2
100	0402114	NUT, 1/4-20 LOK REV SS	11
101	0402120	WASHER, 3/8 SS	8
102	0402123	NUT, 3/8-16 LOK SS	8
103	07005922	MOUNT-HYD GAUGE	1
104	0712230	BOSS, TURNTABLE LOCK	4
105	0722104	ANGLE - WINCH MOUNTING	4
106	0724651	COVER	2
107	08005607	WINCH MOUNT, 35K FRONT	2
108	08005608	WINCH MOUNT, 35K REAR	2
109	0806994	HOUSE LOCK INDICATOR WELDMENT	4
110	0810433	HHU CHAIN ROLLER BRACKET, LH	1
111	0810434	HHU CHAIN ROLLER BRACKET, RH	1
112	09000097	ILLUMINATED LEGEND ASSY-LT UPP	1
113	09000135	ILLUMINATED LEGEND ASSY-RT UPP	1
114	09002247	CONTROL ASSY, 11 HANDLE WV	1
115	09002910	PUMP KIT, 4K KNEE BOOM	1
116	09002949	ILLUM LEGEND LT 1150 KNEE	1
117	09004266	U/L BOOM ASSEMBLY (SHORT)	1
118	09009470	SUBFRAME ASSY, 1140 RXP KB 12V	1
119	0906532	SWIVEL - BOOM ASSEMBLY	1
120	0908418	KIT-MUDFLAP CENTURY ROTATOR	1
121	0910231	BOOM ASSEMBLY 1140 (3-STAGE)	1
122	0910232	WRECKER FRAME ASSEMBLY - 1140	1
123	0910411	KIT - REAR OUTRGR 4-STG LG BOS	1
124	0910838	BUA '10 ROT AL BODY W/ XP TRI	1
125	0910935	XBAR ASY HRDWR-XHD 5X5 CENTURY	1
126	0911237	ILLUM LEGEND ASSY RH LWR WLV	1
127	0911324	RH CTL STATION ASSY 5 WINCH WV	1
128	0911804	AIR REGULATOR-GAUGE ASSEMBLY	4
129	24773017	HOSE ASSEMBLY 140"LG	2
130	24773018	HOSE ASSEMBLY 140"LG	2
131	9010520	FITTING-ELBOW 1/4T-1/4NPT	5
132	9024041	SWITCH, ROCKER SPST RED 12V21A	22
133	9041402	1/2 NC X 1 1/4 HHCS PLT GR8	6
134	9041403	1/2 NC X 1 1/2 HHCS PL GR8	14
135	9402970	TOOLBOX MTG. PAD	14
136	942480011	PLATE,SLOT-SS REAR WASHER TBOX	16
137	AWS-6821-A	HOSE ASSY-PRESSURE	10
138	FC41	FITTING-90DEG BLKHD ELB W/ NUT	8
139	HC1291	FITTING, 4MJ-4MB STR THR	16

09009128 BASIC UNIT ASSEMBLY 1140 RXP KNEEBOOM (cont'd)

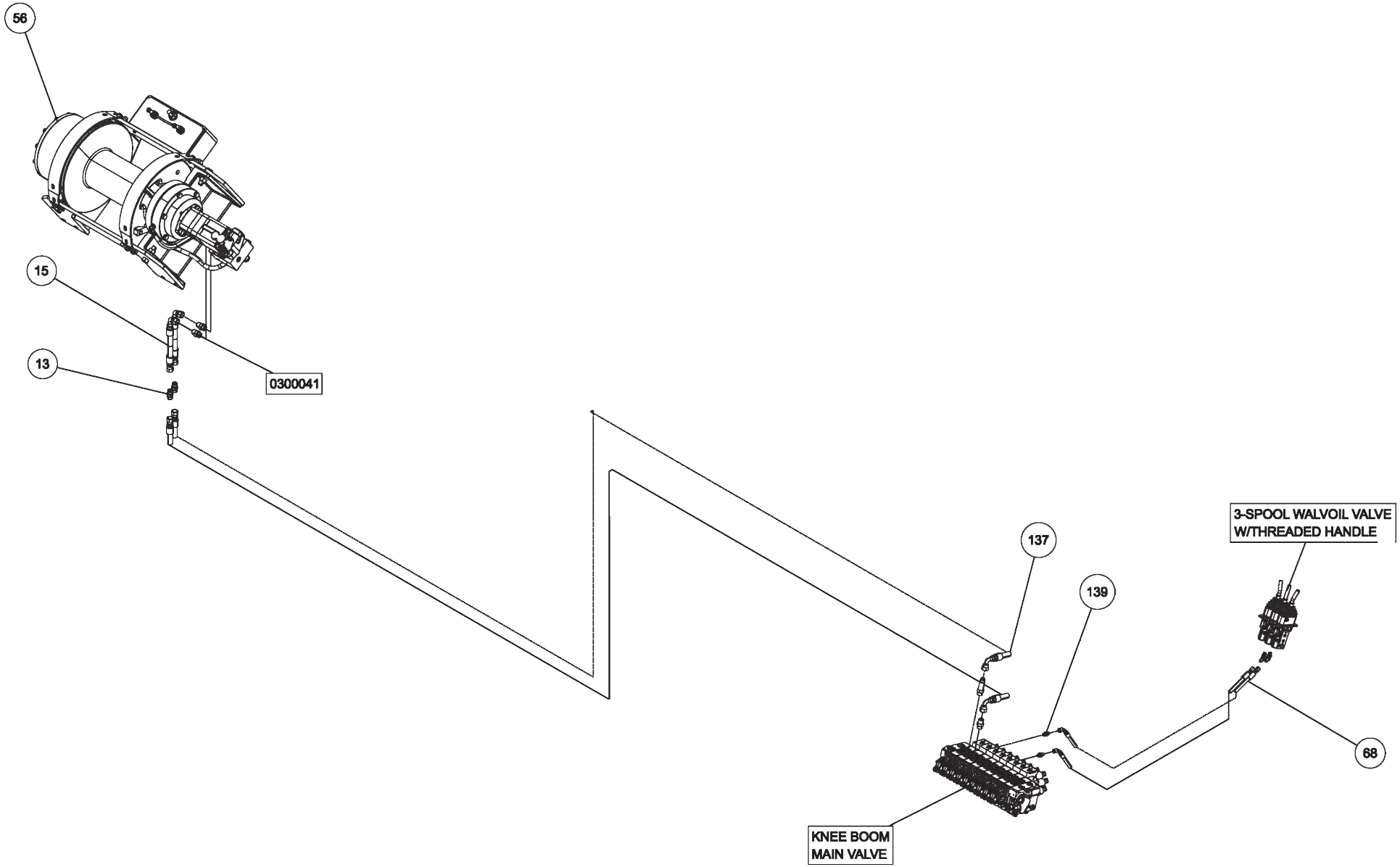

09009128 BASIC UNIT ASSEMBLY 1140 RXP KNEEBOOM (cont'd)

ITEM	PART NUMBER	DESCRIPTION	QTY
	09009128	BASIC UNIT ASSEMBLY 1140 RXP KB	
1	0300113	GREASE FITTING, 1/4-28 STR	1
2	03003419	HOSE, HYD 132" LG	1
3	03003420	HOSE, HYD 60" LG	1
4	03003421	HOSE, HYD 18"LG	3
5	03003424	HOSE, HYD 138"	1
6	03003425	HOSE, HYD 90" LG	4
7	03003426	HOSE, HYD 45" LG	6
8	0300364	CLAMP-HOSE,0.875"-2.75" 50"LBS	2
9	0300434	FITTING, HOSE BARB, 2	1
10	0300558	HOSE, SUCTION 2"ID 100R4 (C4)	1
11	0300835	KNOB-BOOM (UP-DOWN)	1
12	0300837	KNOB-BOOM (IN-OUT)	1
13	0300865	FITTING, CONNECTOR 8MJ-8MJ	5
14	0301113	HOSE HYD, 82"	2
15	0301207	HOSE HYD, 72"	4
16	0301377	FITTING, TEE,3/8" JIC	1
17	0301388	ELBOW, 8MJ-8MB90	3
18	0301422	FITTING, 6MJ-6MJ SMALL	4
19	0301473	HOSE HYD, 18" LG	2
20	0301522	ADAPTER, 6MJ-6MB	1
21	0301529	HOSE HYD, 58	2
22	03015922	STAUFF CLAMP, 3/8 TWIN	4
23	03016142	TUBE, HYD ASSY SF TO O/R	4
24	0301695	HOSE HYD, 91"	1
25	0301837	INLINE ORIFICE	4
26	0301909	RECEPTACLE BOOT	1
27	0301946	FITTING, BLKHD CONNECT	3
28	0301948	HD 7 WAY TRAILER CONNECT	1
29	0301961	BALL VALVE 2	1
30	0302056	HOSE HYD, 183"	5
31	0302205	GAUGE, FLUSH MNTG-6000 PSI	2
32	0302312	HOSE HYD, 43" LG 12G2AT	1
33	0302367	PIPE NIPPLE - 2 X 4	1
34	0302372	HOSE HYD, 240" LG	4
35	0302508	FITTING, ELL 8MJ-8MB 90LL	3
36	0302534	FITTING, 45 DEG ELBOW	2
37	0302604	HOSE HYD, 44"	2
38	0302632	HOSE HYD, 40"	8
39	0302805	HOSE HYD, 10"	1
40	0302856	KNOB-TILT, 3/8-16 THREAD	1
41	0302881	HOSE HYD, 45"	1
42	0303170	HOSE, HYD. 75"	1
43	0303340	HOSE HYD, 50" LG	1
44	0303379	KNOB, SWING CW - CCW	1
45	0303380	KNOB-UNDERLIFT (IN-OUT)	1
46	0303381	KNOB - UNDERLIFT (UP-DN)	1

ITEM	PART NUMBER	DESCRIPTION	QTY
47	0303391	HOSE 8AT2(8FJX-8FJ90) 110"	3
48	0303538	FITT, ADAPTER -BRASS 8FP-6MP	1
49	0303539	QUICK DISCONNECT 3/8 FPT	1
50	0303950	FITTING 45DEG DOT BRASS	1
51	0304363	QUICK DISCONNECT 1/2 FPT	2
52	0306537	EMERGENCY SWITCH	2
53	0306540	ROTARY SELECT SWITCH OPERATOR	12
54	0306870	HOSE HYDR - 96"	4
55	0306921	PIPE PLUG, 2" SQ HD	1
56	0307061	WINCH-35K dp 2-SP N.DRUM W/TEN	3
57	0307452	HOSE, HYD 146" LG	4
58	0307472	HOSE, HYD ASSY 24" LG	1
59	0307604	KNOB, RED LONG - SK0700-07	5
60	0310314	HOSE ASSY - 42" LG	4
61	0310456	PUSH BUTTN OPER W/MTG(RED) N/C	2
62	0310581	hose assy- 96" 8 fjx-10fjx90	4
63	0310637	PLUG, HOLE	2
64	0311191	ROLLER, POLY, 4" X 5/8"	2
65	0311305	T-BOLT CLAMP 1 3/8 TO 1 9/16	4
66	0311355	HOBBS HOURMETER	1
67	0311417	HOSE, 196" 3/8 2 X STRAIGHT	2
68	0311426	HOSE ASSY, 80" 4FJX-4FJX45	16
69	0311755	WATER SEPARATOR-MONNIER	1
70	0313129	HOSE, 1 SUCTION 16C4	34
71	0400005	SCREW, 6-32X1/2 PRH SS	6
72	0400012	LKWASHER, #8 SS	8
73	0400021	SCREW, 8-32X1/2 PRH SS	12
74	04000381	SS BHSCS 1/4-20 X 1	15
75	0400062	SCREW, 1/4-20X3/4 THC	3
76	0400066	SCREW, 1/4-20X3/4 HHC GR5	8
77	0400288	SCREW, 3/4-10X2-1/2 HHC GR8	16
78	0400307	SCREW, 7/8-9X4 HHC GR8	16
79	0400369	NUT, 1/4 SPR J	11
80	0400431	NUT, 3/4-10 LOK GR8	16
81	0400437	NUT, 7/8-9 LOK GR8	16
82	0400452	LKWASHER, 1/4	8
83	0400454	WASHER, 1/4 SS	2
84	0400473	WASHER, 7/8 PL GR8	16
85	0400489	WASHER, 3/4 SAE GR8	32
86	0400491	LKWASHER, 1/2	20
87	0400492	USS FLAT WASHER, 1/2	2
88	0400497	WASHER, 1/2 GR8	6
89	0400498	WASHER, 1/2X2X0.125	14
90	0400554	PIN, 3/8X1 SPR	3
91	0400900	NUT, 1/2-13 LOK JAM	2
92	0402020	SCREW, 1/4-20X3/4 HHC SS	2
93	0402021	SCREW, 1/4-20X1 HHC SS	13

ITEM	PART NUMBER	DESCRIPTION	QTY
94	0402044	SCREW, 3/8-16X1-1/2 HHC SS	8
95	0402080	WASHER, #8 SS	8
96	0402094	NUT, HEX 6-32 SS	6
97	0402110	WASHER, 1/4 SS	17
98	0402111	LKWASHER, 1/4 SS	30
99	0402113	NUT, 1/4-20 LOK SS	2
100	0402114	NUT, 1/4-20 LOK REV SS	11
101	0402120	WASHER, 3/8 SS	8
102	0402123	NUT, 3/8-16 LOK SS	8
103	07005922	MOUNT-HYD GAUGE	1
104	0712230	BOSS, TURNTABLE LOCK	4
105	0722104	ANGLE - WINCH MOUNTING	4
106	0724651	COVER	2
107	08005607	WINCH MOUNT, 35K FRONT	2
108	08005608	WINCH MOUNT, 35K REAR	2
109	0806994	HOUSE LOCK INDICATOR WELDMENT	4
110	0810433	HHU CHAIN ROLLER BRACKET, LH	1
111	0810434	HHU CHAIN ROLLER BRACKET, RH	1
112	09000097	ILLUMINATED LEGEND ASSY-LT UPP	1
113	09000135	ILLUMINATED LEGEND ASSY-RT UPP	1
114	09002247	CONTROL ASSY, 11 HANDLE WV	1
115	09002910	PUMP KIT, 4K KNEE BOOM	1
116	09002949	ILLUM LEGEND LT 1150 KNEE	1
117	09004266	U/L BOOM ASSEMBLY (SHORT)	1
118	09009470	SUBFRAME ASSY, 1140 RXP KB 12V	1
119	0906532	SWIVEL - BOOM ASSEMBLY	1
120	0908418	KIT-MUDFLAP CENTURY ROTATOR	1
121	0910231	BOOM ASSEMBLY 1140 (3-STAGE)	1
122	0910232	WRECKER FRAME ASSEMBLY - 1140	1
123	0910411	KIT - REAR OUTRGR 4-STG LG BOS	1
124	0910838	BUA '10 ROT AL BODY W/ XP TRI	1
125	0910935	XBAR ASY HRDWR-XHD 5X5 CENTURY	1
126	0911237	ILLUM LEGEND ASSY RH LWR WLV	1
127	0911324	RH CTL STATION ASSY 5 WINCH WV	1
128	0911804	AIR REGULATOR-GAUGE ASSEMBLY	4
129	24773017	HOSE ASSEMBLY 140"LG	2
130	24773018	HOSE ASSEMBLY 140"LG	2
131	9010520	FITTING-ELBOW 1/4T-1/4NPT	5
132	9024041	SWITCH, ROCKER SPST RED 12V21A	22
133	9041402	1/2 NC X 1 1/4 HHCS PLT GR8	6
134	9041403	1/2 NC X 1 1/2 HHCS PL GR8	14
135	9402970	TOOLBOX MTG. PAD	14
136	942480011	PLATE,SLOT-SS REAR WASHER TBOX	16
137	AWS-6821-A	HOSE ASSY-PRESSURE	10
138	FC41	FITTING-90DEG BLKHD ELB W/ NUT	8
139	HC1291	FITTING, 4MJ-4MB STR THR	16

09009128 BASIC UNIT ASSEMBLY 1140 RXP KNEEBOOM (cont'd)

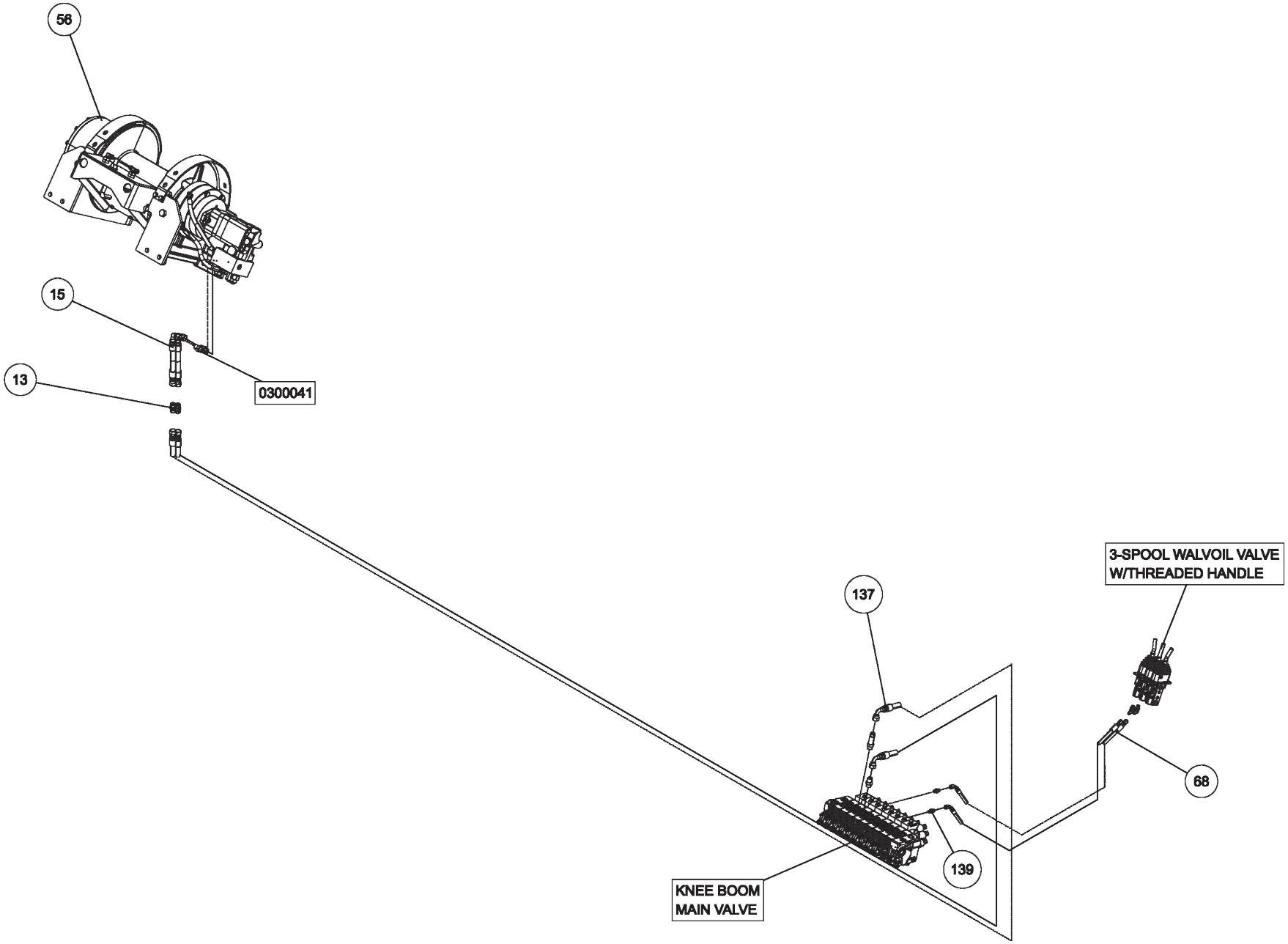

09009128 BASIC UNIT ASSEMBLY 1140 RXP KNEEBOOM (cont'd)

ITEM	PART NUMBER	DESCRIPTION	QTY
	09009128	BASIC UNIT ASSEMBLY 1140 RXP KB	
1	0300113	GREASE FITTING, 1/4-28 STR	1
2	03003419	HOSE, HYD 132" LG	1
3	03003420	HOSE, HYD 60" LG	1
4	03003421	HOSE, HYD 18"LG	3
5	03003424	HOSE, HYD 138"	1
6	03003425	HOSE, HYD 90" LG	4
7	03003426	HOSE, HYD 45" LG	6
8	0300364	CLAMP-HOSE,0.875"-2.75" 50"LBS	2
9	0300434	FITTING, HOSE BARB, 2	1
10	0300558	HOSE, SUCTION 2"ID 100R4 (C4)	1
11	0300835	KNOB-BOOM (UP-DOWN)	1
12	0300837	KNOB-BOOM (IN-OUT)	1
13	0300865	FITTING, CONNECTOR 8MJ-8MJ	5
14	0301113	HOSE HYD, 82"	2
15	0301207	HOSE HYD, 72"	4
16	0301377	FITTING, TEE,3/8" JIC	1
17	0301388	ELBOW, 8MJ-8MB90	3
18	0301422	FITTING, 6MJ-6MJ SMALL	4
19	0301473	HOSE HYD, 18" LG	2
20	0301522	ADAPTER, 6MJ-6MB	1
21	0301529	HOSE HYD, 58	2
22	03015922	STAUFF CLAMP, 3/8 TWIN	4
23	03016142	TUBE, HYD ASSY SF TO O/R	4
24	0301695	HOSE HYD, 91"	1
25	0301837	INLINE ORIFICE	4
26	0301909	RECEPTACLE BOOT	1
27	0301946	FITTING, BLKHD CONNECT	3
28	0301948	HD 7 WAY TRAILER CONNECT	1
29	0301961	BALL VALVE 2	1
30	0302056	HOSE HYD, 183"	5
31	0302205	GAUGE, FLUSH MNTG-6000 PSI	2
32	0302312	HOSE HYD, 43" LG 12G2AT	1
33	0302367	PIPE NIPPLE - 2 X 4	1
34	0302372	HOSE HYD, 240" LG	4
35	0302508	FITTING, ELL 8MJ-8MB 90LL	3
36	0302534	FITTING, 45 DEG ELBOW	2
37	0302604	HOSE HYD, 44"	2
38	0302632	HOSE HYD, 40"	8
39	0302805	HOSE HYD, 10"	1
40	0302856	KNOB-TILT, 3/8-16 THREAD	1
41	0302881	HOSE HYD, 45"	1
42	0303170	HOSE, HYD. 75"	1
43	0303340	HOSE HYD, 50" LG	1
44	0303379	KNOB, SWING CW - CCW	1
45	0303380	KNOB-UNDERLIFT (IN-OUT)	1
46	0303381	KNOB - UNDERLIFT (UP-DN)	1

ITEM	PART NUMBER	DESCRIPTION	QTY
47	0303391	HOSE 8AT2(8FJX-8FJ90) 110"	3
48	0303538	FITT, ADAPTER -BRASS 8FP-6MP	1
49	0303539	QUICK DISCONNECT 3/8 FPT	1
50	0303950	FITTING 45DEG DOT BRASS	1
51	0304363	QUICK DISCONNECT 1/2 FPT	2
52	0306537	EMERGENCY SWITCH	2
53	0306540	ROTARY SELECT SWITCH OPERATOR	12
54	0306870	HOSE HYDR - 96"	4
55	0306921	PIPE PLUG, 2" SQ HD	1
56	0307061	WINCH-35K dp 2-SP N.DRUM W/TEN	3
57	0307452	HOSE, HYD 146" LG	4
58	0307472	HOSE, HYD ASSY 24" LG	1
59	0307604	KNOB, RED LONG - SK0700-07	5
60	0310314	HOSE ASSY - 42" LG	4
61	0310456	PUSH BUTTN OPER W/MTG(RED) N/C	2
62	0310581	hose assy- 96" 8 fjx-10fjx90	4
63	0310637	PLUG, HOLE	2
64	0311191	ROLLER, POLY, 4" X 5/8"	2
65	0311305	T-BOLT CLAMP 1 3/8 TO 1 9/16	4
66	0311355	HOBBS HOURMETER	1
67	0311417	HOSE, 196" 3/8 2 X STRAIGHT	2
68	0311426	HOSE ASSY, 80" 4FJX-4FJX45	16
69	0311755	WATER SEPARATOR-MONNIER	1
70	0313129	HOSE, 1 SUCTION 16C4	34
71	0400005	SCREW, 6-32X1/2 PRH SS	6
72	0400012	LKWASHER, #8 SS	8
73	0400021	SCREW, 8-32X1/2 PRH SS	12
74	04000381	SS BHSCS 1/4-20 X 1	15
75	0400062	SCREW, 1/4-20X3/4 THC	3
76	0400066	SCREW, 1/4-20X3/4 HHC GR5	8
77	0400288	SCREW, 3/4-10X2-1/2 HHC GR8	16
78	0400307	SCREW, 7/8-9X4 HHC GR8	16
79	0400369	NUT, 1/4 SPR J	11
80	0400431	NUT, 3/4-10 LOK GR8	16
81	0400437	NUT, 7/8-9 LOK GR8	16
82	0400452	LKWASHER, 1/4	8
83	0400454	WASHER, 1/4 SS	2
84	0400473	WASHER, 7/8 PL GR8	16
85	0400489	WASHER, 3/4 SAE GR8	32
86	0400491	LKWASHER, 1/2	20
87	0400492	USS FLAT WASHER, 1/2	2
88	0400497	WASHER, 1/2 GR8	6
89	0400498	WASHER, 1/2X2X0.125	14
90	0400554	PIN, 3/8X1 SPR	3
91	0400900	NUT, 1/2-13 LOK JAM	2
92	0402020	SCREW, 1/4-20X3/4 HHC SS	2
93	0402021	SCREW, 1/4-20X1 HHC SS	13

ITEM	PART NUMBER	DESCRIPTION	QTY
94	0402044	SCREW, 3/8-16X1-1/2 HHC SS	8
95	0402080	WASHER, #8 SS	8
96	0402094	NUT, HEX 6-32 SS	6
97	0402110	WASHER, 1/4 SS	17
98	0402111	LKWASHER, 1/4 SS	30
99	0402113	NUT, 1/4-20 LOK SS	2
100	0402114	NUT, 1/4-20 LOK REV SS	11
101	0402120	WASHER, 3/8 SS	8
102	0402123	NUT, 3/8-16 LOK SS	8
103	07005922	MOUNT-HYD GAUGE	1
104	0712230	BOSS, TURNTABLE LOCK	4
105	0722104	ANGLE - WINCH MOUNTING	4
106	0724651	COVER	2
107	08005607	WINCH MOUNT, 35K FRONT	2
108	08005608	WINCH MOUNT, 35K REAR	2
109	0806994	HOUSE LOCK INDICATOR WELDMENT	4
110	0810433	HHU CHAIN ROLLER BRACKET, LH	1
111	0810434	HHU CHAIN ROLLER BRACKET, RH	1
112	09000097	ILLUMINATED LEGEND ASSY-LT UPP	1
113	09000135	ILLUMINATED LEGEND ASSY-RT UPP	1
114	09002247	CONTROL ASSY, 11 HANDLE WV	1
115	09002910	PUMP KIT, 4K KNEE BOOM	1
116	09002949	ILLUM LEGEND LT 1150 KNEE	1
117	09004266	U/L BOOM ASSEMBLY (SHORT)	1
118	09009470	SUBFRAME ASSY, 1140 RXP KB 12V	1
119	0906532	SWIVEL - BOOM ASSEMBLY	1
120	0908418	KIT-MUDFLAP CENTURY ROTATOR	1
121	0910231	BOOM ASSEMBLY 1140 (3-STAGE)	1
122	0910232	WRECKER FRAME ASSEMBLY - 1140	1
123	0910411	KIT - REAR OUTRGR 4-STG LG BOS	1
124	0910838	BUA '10 ROT AL BODY W/ XP TRI	1
125	0910935	XBAR ASY HRDWR-XHD 5X5 CENTURY	1
126	0911237	ILLUM LEGEND ASSY RH LWR WLV	1
127	0911324	RH CTL STATION ASSY 5 WINCH WV	1
128	0911804	AIR REGULATOR-GAUGE ASSEMBLY	4
129	24773017	HOSE ASSEMBLY 140"LG	2
130	24773018	HOSE ASSEMBLY 140"LG	2
131	9010520	FITTING-ELBOW 1/4T-1/4NPT	5
132	9024041	SWITCH, ROCKER SPST RED 12V21A	22
133	9041402	1/2 NC X 1 1/4 HHCS PLT GR8	6
134	9041403	1/2 NC X 1 1/2 HHCS PL GR8	14
135	9402970	TOOLBOX MTG. PAD	14
136	942480011	PLATE,SLOT-SS REAR WASHER TBOX	16
137	AWS-6821-A	HOSE ASSY-PRESSURE	10
138	FC41	FITTING-90DEG BLKHD ELB W/ NUT	8
139	HC1291	FITTING, 4MJ-4MB STR THR	16

09009128 BASIC UNIT ASSEMBLY 1140 RXP KNEEBOOM (cont'd)

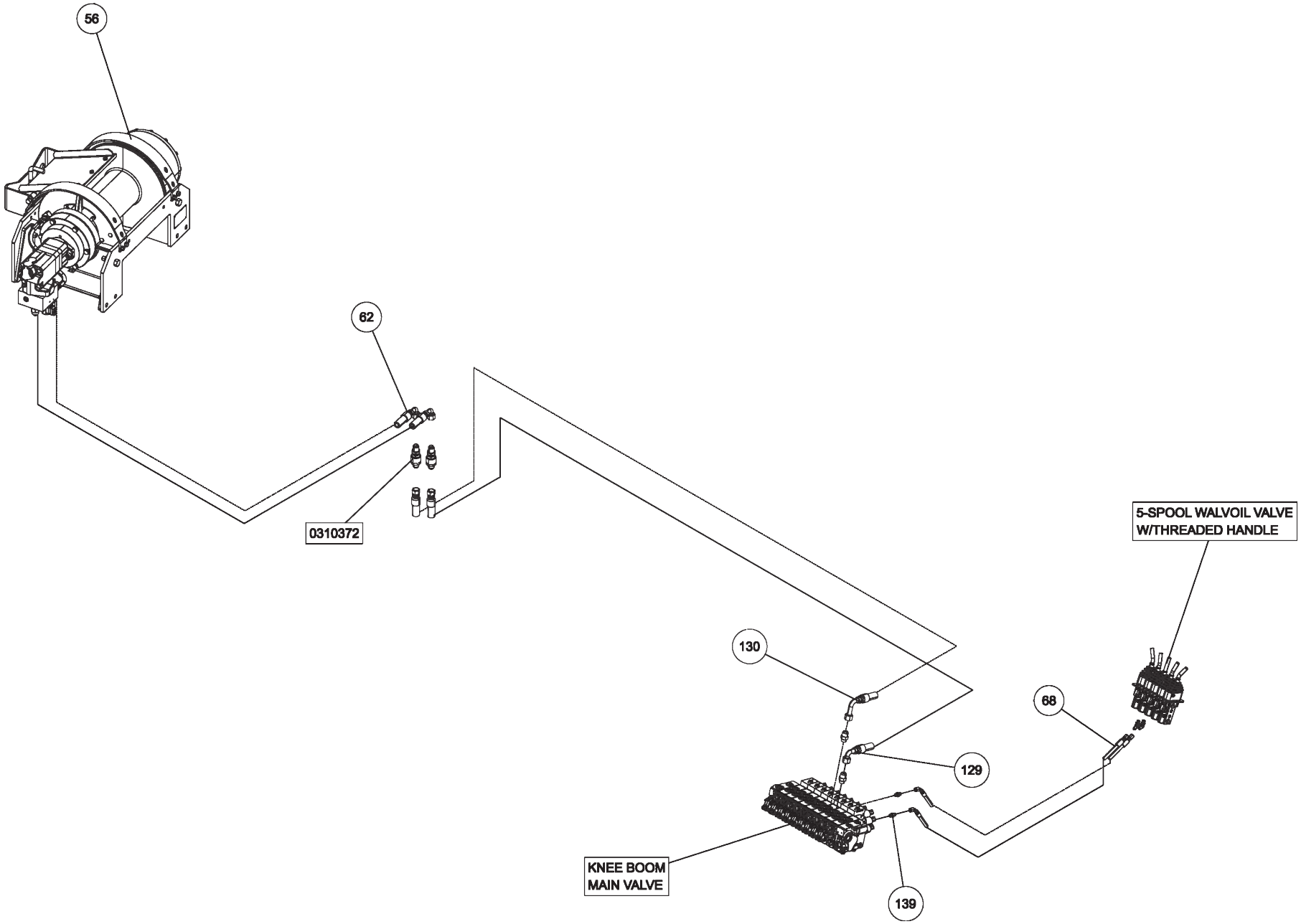

09009128 BASIC UNIT ASSEMBLY 1140 RXP KNEEBOOM (cont'd)

ITEM	PART NUMBER	DESCRIPTION	QTY
	09009128	BASIC UNIT ASSEMBLY 1140 RXP KB	
1	0300113	GREASE FITTING, 1/4-28 STR	1
2	03003419	HOSE, HYD 132" LG	1
3	03003420	HOSE, HYD 60" LG	1
4	03003421	HOSE, HYD 18"LG	3
5	03003424	HOSE, HYD 138"	1
6	03003425	HOSE, HYD 90" LG	4
7	03003426	HOSE, HYD 45" LG	6
8	0300364	CLAMP-HOSE,0.875"-2.75" 50"LBS	2
9	0300434	FITTING, HOSE BARB, 2	1
10	0300558	HOSE, SUCTION 2"ID 100R4 (C4)	1
11	0300835	KNOB-BOOM (UP-DOWN)	1
12	0300837	KNOB-BOOM (IN-OUT)	1
13	0300865	FITTING, CONNECTOR 8MJ-8MJ	5
14	0301113	HOSE HYD, 82"	2
15	0301207	HOSE HYD, 72"	4
16	0301377	FITTING, TEE,3/8" JIC	1
17	0301388	ELBOW, 8MJ-8MB90	3
18	0301422	FITTING, 6MJ-6MJ SMALL	4
19	0301473	HOSE HYD, 18" LG	2
20	0301522	ADAPTER, 6MJ-6MB	1
21	0301529	HOSE HYD, 58	2
22	03015922	STAUFF CLAMP, 3/8 TWIN	4
23	03016142	TUBE, HYD ASSY SF TO O/R	4
24	0301695	HOSE HYD, 91"	1
25	0301837	INLINE ORIFICE	4
26	0301909	RECEPTACLE BOOT	1
27	0301946	FITTING, BLKHD CONNECT	3
28	0301948	HD 7 WAY TRAILER CONNECT	1
29	0301961	BALL VALVE 2	1
30	0302056	HOSE HYD, 183"	5
31	0302205	GAUGE, FLUSH MNTG-6000 PSI	2
32	0302312	HOSE HYD, 43" LG 12G2AT	1
33	0302367	PIPE NIPPLE - 2 X 4	1
34	0302372	HOSE HYD, 240" LG	4
35	0302508	FITTING, ELL 8MJ-8MB 90LL	3
36	0302534	FITTING, 45 DEG ELBOW	2
37	0302604	HOSE HYD, 44"	2
38	0302632	HOSE HYD, 40"	8
39	0302805	HOSE HYD, 10"	1
40	0302856	KNOB-TILT, 3/8-16 THREAD	1
41	0302881	HOSE HYD, 45"	1
42	0303170	HOSE, HYD. 75"	1
43	0303340	HOSE HYD, 50" LG	1
44	0303379	KNOB, SWING CW - CCW	1
45	0303380	KNOB-UNDERLIFT (IN-OUT)	1
46	0303381	KNOB - UNDERLIFT (UP-DN)	1

ITEM	PART NUMBER	DESCRIPTION	QTY
47	0303391	HOSE 8AT2(8FJX-8FJ90) 110"	3
48	0303538	FITT, ADAPTER -BRASS 8FP-6MP	1
49	0303539	QUICK DISCONNECT 3/8 FPT	1
50	0303950	FITTING 45DEG DOT BRASS	1
51	0304363	QUICK DISCONNECT 1/2 FPT	2
52	0306537	EMERGENCY SWITCH	2
53	0306540	ROTARY SELECT SWITCH OPERATOR	12
54	0306870	HOSE HYDR - 96"	4
55	0306921	PIPE PLUG, 2" SQ HD	1
56	0307061	WINCH-35K dp 2-SP N.DRUM W/TEN	3
57	0307452	HOSE, HYD 146" LG	4
58	0307472	HOSE, HYD ASSY 24" LG	1
59	0307604	KNOB, RED LONG - SK0700-07	5
60	0310314	HOSE ASSY - 42" LG	4
61	0310456	PUSH BUTTN OPER W/MTG(RED) N/C	2
62	0310581	hose assy- 96" 8 fjx-10fjx90	4
63	0310637	PLUG, HOLE	2
64	0311191	ROLLER, POLY, 4" X 5/8"	2
65	0311305	T-BOLT CLAMP 1 3/8 TO 1 9/16	4
66	0311355	HOBBS HOURMETER	1
67	0311417	HOSE, 196" 3/8 2 X STRAIGHT	2
68	0311426	HOSE ASSY, 80" 4FJX-4FJX45	16
69	0311755	WATER SEPARATOR-MONNIER	1
70	0313129	HOSE, 1 SUCTION 16C4	34
71	0400005	SCREW, 6-32X1/2 PRH SS	6
72	0400012	LKWASHER, #8 SS	8
73	0400021	SCREW, 8-32X1/2 PRH SS	12
74	04000381	SS BHSCS 1/4-20 X 1	15
75	0400062	SCREW, 1/4-20X3/4 THC	3
76	0400066	SCREW, 1/4-20X3/4 HHC GR5	8
77	0400288	SCREW, 3/4-10X2-1/2 HHC GR8	16
78	0400307	SCREW, 7/8-9X4 HHC GR8	16
79	0400369	NUT, 1/4 SPR J	11
80	0400431	NUT, 3/4-10 LOK GR8	16
81	0400437	NUT, 7/8-9 LOK GR8	16
82	0400452	LKWASHER, 1/4	8
83	0400454	WASHER, 1/4 SS	2
84	0400473	WASHER, 7/8 PL GR8	16
85	0400489	WASHER, 3/4 SAE GR8	32
86	0400491	LKWASHER, 1/2	20
87	0400492	USS FLAT WASHER, 1/2	2
88	0400497	WASHER, 1/2 GR8	6
89	0400498	WASHER, 1/2X2X0.125	14
90	0400554	PIN, 3/8X1 SPR	3
91	0400900	NUT, 1/2-13 LOK JAM	2
92	0402020	SCREW, 1/4-20X3/4 HHC SS	2
93	0402021	SCREW, 1/4-20X1 HHC SS	13

ITEM	PART NUMBER	DESCRIPTION	QTY
94	0402044	SCREW, 3/8-16X1-1/2 HHC SS	8
95	0402080	WASHER, #8 SS	8
96	0402094	NUT, HEX 6-32 SS	6
97	0402110	WASHER, 1/4 SS	17
98	0402111	LKWASHER, 1/4 SS	30
99	0402113	NUT, 1/4-20 LOK SS	2
100	0402114	NUT, 1/4-20 LOK REV SS	11
101	0402120	WASHER, 3/8 SS	8
102	0402123	NUT, 3/8-16 LOK SS	8
103	07005922	MOUNT-HYD GAUGE	1
104	0712230	BOSS, TURNTABLE LOCK	4
105	0722104	ANGLE - WINCH MOUNTING	4
106	0724651	COVER	2
107	08005607	WINCH MOUNT, 35K FRONT	2
108	08005608	WINCH MOUNT, 35K REAR	2
109	0806994	HOUSE LOCK INDICATOR WELDMENT	4
110	0810433	HHU CHAIN ROLLER BRACKET, LH	1
111	0810434	HHU CHAIN ROLLER BRACKET, RH	1
112	09000097	ILLUMINATED LEGEND ASSY-LT UPP	1
113	09000135	ILLUMINATED LEGEND ASSY-RT UPP	1
114	09002247	CONTROL ASSY, 11 HANDLE WV	1
115	09002910	PUMP KIT, 4K KNEE BOOM	1
116	09002949	ILLUM LEGEND LT 1150 KNEE	1
117	09004266	U/L BOOM ASSEMBLY (SHORT)	1
118	09009470	SUBFRAME ASSY, 1140 RXP KB 12V	1
119	0906532	SWIVEL - BOOM ASSEMBLY	1
120	0908418	KIT-MUDFLAP CENTURY ROTATOR	1
121	0910231	BOOM ASSEMBLY 1140 (3-STAGE)	1
122	0910232	WRECKER FRAME ASSEMBLY - 1140	1
123	0910411	KIT - REAR OUTRGR 4-STG LG BOS	1
124	0910838	BUA '10 ROT AL BODY W/ XP TRI	1
125	0910935	XBAR ASY HRDWR-XHD 5X5 CENTURY	1
126	0911237	ILLUM LEGEND ASSY RH LWR WLV	1
127	0911324	RH CTL STATION ASSY 5 WINCH WV	1
128	0911804	AIR REGULATOR-GAUGE ASSEMBLY	4
129	24773017	HOSE ASSEMBLY 140"LG	2
130	24773018	HOSE ASSEMBLY 140"LG	2
131	9010520	FITTING-ELBOW 1/4T-1/4NPT	5
132	9024041	SWITCH, ROCKER SPST RED 12V21A	22
133	9041402	1/2 NC X 1 1/4 HHCS PLT GR8	6
134	9041403	1/2 NC X 1 1/2 HHCS PL GR8	14
135	9402970	TOOLBOX MTG. PAD	14
136	942480011	PLATE,SLOT-SS REAR WASHER TBOX	16
137	AWS-6821-A	HOSE ASSY-PRESSURE	10
138	FC41	FITTING-90DEG BLKHD ELB W/ NUT	8
139	HC1291	FITTING, 4MJ-4MB STR THR	16

09009128 BASIC UNIT ASSEMBLY 1140 RXP KNEEBOOM (cont'd)

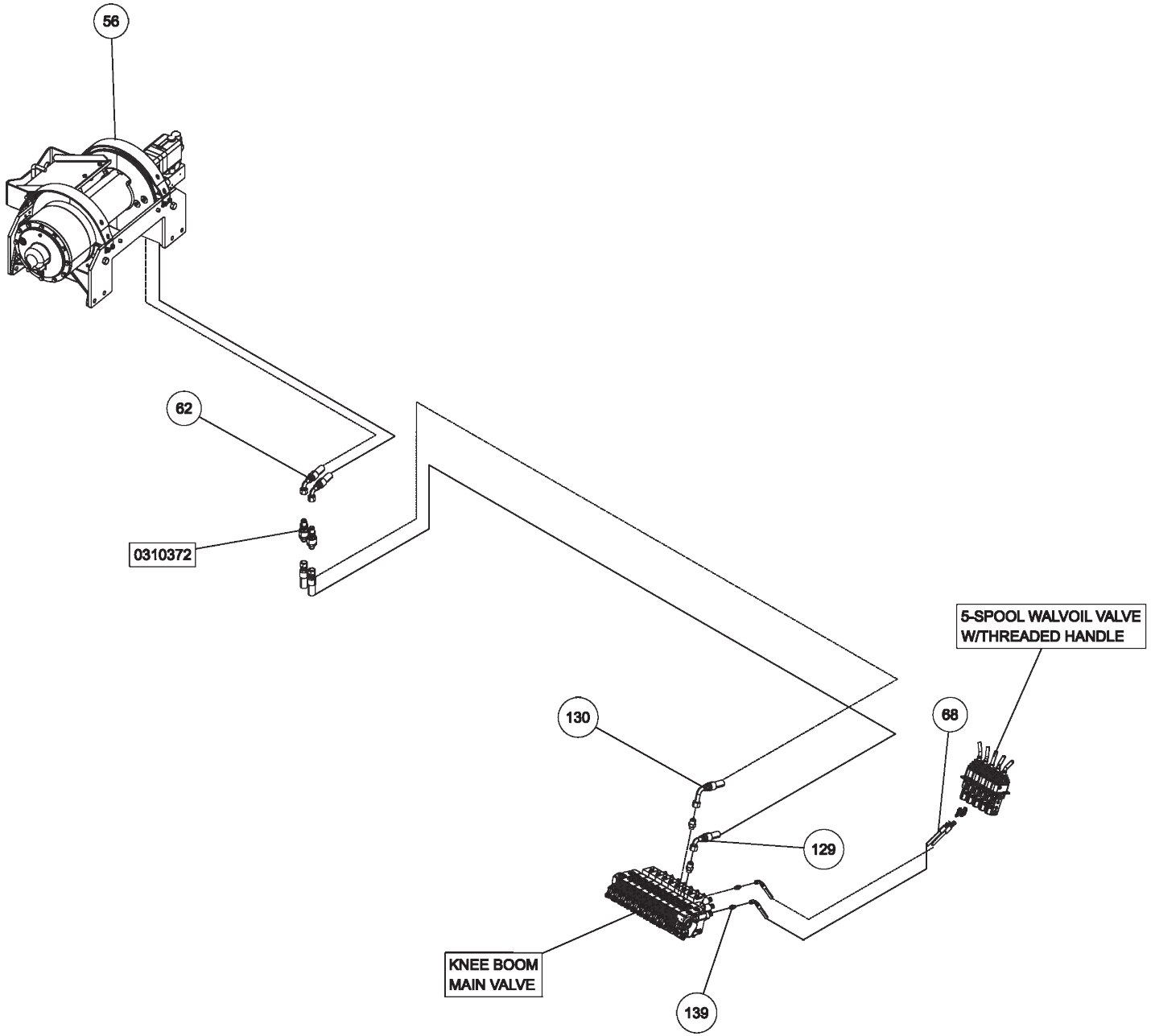

09009128 BASIC UNIT ASSEMBLY 1140 RXP KNEEBOOM (cont'd)

ITEM	PART NUMBER	DESCRIPTION	QTY
	09009128	BASIC UNIT ASSEMBLY 1140 RXP KB	
1	0300113	GREASE FITTING, 1/4-28 STR	1
2	03003419	HOSE, HYD 132" LG	1
3	03003420	HOSE, HYD 60" LG	1
4	03003421	HOSE, HYD 18"LG	3
5	03003424	HOSE, HYD 138"	1
6	03003425	HOSE, HYD 90" LG	4
7	03003426	HOSE, HYD 45" LG	6
8	0300364	CLAMP-HOSE,0.875"-2.75" 50"LBS	2
9	0300434	FITTING, HOSE BARB, 2	1
10	0300558	HOSE, SUCTION 2"ID 100R4 (C4)	1
11	0300835	KNOB-BOOM (UP-DOWN)	1
12	0300837	KNOB-BOOM (IN-OUT)	1
13	0300865	FITTING, CONNECTOR 8MJ-8MJ	5
14	0301113	HOSE HYD, 82"	2
15	0301207	HOSE HYD, 72"	4
16	0301377	FITTING, TEE,3/8" JIC	1
17	0301388	ELBOW, 8MJ-8MB90	3
18	0301422	FITTING, 6MJ-6MJ SMALL	4
19	0301473	HOSE HYD, 18" LG	2
20	0301522	ADAPTER, 6MJ-6MB	1
21	0301529	HOSE HYD, 58	2
22	03015922	STAUFF CLAMP, 3/8 TWIN	4
23	03016142	TUBE, HYD ASSY SF TO O/R	4
24	0301695	HOSE HYD, 91"	1
25	0301837	INLINE ORIFICE	4
26	0301909	RECEPTACLE BOOT	1
27	0301946	FITTING, BLKHD CONNECT	3
28	0301948	HD 7 WAY TRAILER CONNECT	1
29	0301961	BALL VALVE 2	1
30	0302056	HOSE HYD, 183"	5
31	0302205	GAUGE, FLUSH MNTG-6000 PSI	2
32	0302312	HOSE HYD, 43" LG 12G2AT	1
33	0302367	PIPE NIPPLE - 2 X 4	1
34	0302372	HOSE HYD, 240" LG	4
35	0302508	FITTING, ELL 8MJ-8MB 90LL	3
36	0302534	FITTING, 45 DEG ELBOW	2
37	0302604	HOSE HYD, 44"	2
38	0302632	HOSE HYD, 40"	8
39	0302805	HOSE HYD, 10"	1
40	0302856	KNOB-TILT, 3/8-16 THREAD	1
41	0302881	HOSE HYD, 45"	1
42	0303170	HOSE, HYD. 75"	1
43	0303340	HOSE HYD, 50" LG	1
44	0303379	KNOB, SWING CW - CCW	1
45	0303380	KNOB-UNDERLIFT (IN-OUT)	1
46	0303381	KNOB - UNDERLIFT (UP-DN)	1

ITEM	PART NUMBER	DESCRIPTION	QTY
47	0303391	HOSE 8AT2(8FJX-8FJ90) 110"	3
48	0303538	FITT, ADAPTER -BRASS 8FP-6MP	1
49	0303539	QUICK DISCONNECT 3/8 FPT	1
50	0303950	FITTING 45DEG DOT BRASS	1
51	0304363	QUICK DISCONNECT 1/2 FPT	2
52	0306537	EMERGENCY SWITCH	2
53	0306540	ROTARY SELECT SWITCH OPERATOR	12
54	0306870	HOSE HYDR - 96"	4
55	0306921	PIPE PLUG, 2" SQ HD	1
56	0307061	WINCH-35K dp 2-SP N.DRUM W/TEN	3
57	0307452	HOSE, HYD 146" LG	4
58	0307472	HOSE, HYD ASSY 24" LG	1
59	0307604	KNOB, RED LONG - SK0700-07	5
60	0310314	HOSE ASSY - 42" LG	4
61	0310456	PUSH BUTTN OPER W/MTG(RED) N/C	2
62	0310581	hose assy- 96" 8 fjx-10fjx90	4
63	0310637	PLUG, HOLE	2
64	0311191	ROLLER, POLY, 4" X 5/8"	2
65	0311305	T-BOLT CLAMP 1 3/8 TO 1 9/16	4
66	0311355	HOBBS HOURMETER	1
67	0311417	HOSE, 196" 3/8 2 X STRAIGHT	2
68	0311426	HOSE ASSY, 80" 4FJX-4FJX45	16
69	0311755	WATER SEPARATOR-MONNIER	1
70	0313129	HOSE, 1 SUCTION 16C4	34
71	0400005	SCREW, 6-32X1/2 PRH SS	6
72	0400012	LKWASHER, #8 SS	8
73	0400021	SCREW, 8-32X1/2 PRH SS	12
74	04000381	SS BHSCS 1/4-20 X 1	15
75	0400062	SCREW, 1/4-20X3/4 THC	3
76	0400066	SCREW, 1/4-20X3/4 HHC GR5	8
77	0400288	SCREW, 3/4-10X2-1/2 HHC GR8	16
78	0400307	SCREW, 7/8-9X4 HHC GR8	16
79	0400369	NUT, 1/4 SPR J	11
80	0400431	NUT, 3/4-10 LOK GR8	16
81	0400437	NUT, 7/8-9 LOK GR8	16
82	0400452	LKWASHER, 1/4	8
83	0400454	WASHER, 1/4 SS	2
84	0400473	WASHER, 7/8 PL GR8	16
85	0400489	WASHER, 3/4 SAE GR8	32
86	0400491	LKWASHER, 1/2	20
87	0400492	USS FLAT WASHER, 1/2	2
88	0400497	WASHER, 1/2 GR8	6
89	0400498	WASHER, 1/2X2X0.125	14
90	0400554	PIN, 3/8X1 SPR	3
91	0400900	NUT, 1/2-13 LOK JAM	2
92	0402020	SCREW, 1/4-20X3/4 HHC SS	2
93	0402021	SCREW, 1/4-20X1 HHC SS	13

ITEM	PART NUMBER	DESCRIPTION	QTY
94	0402044	SCREW, 3/8-16X1-1/2 HHC SS	8
95	0402080	WASHER, #8 SS	8
96	0402094	NUT, HEX 6-32 SS	6
97	0402110	WASHER, 1/4 SS	17
98	0402111	LKWASHER, 1/4 SS	30
99	0402113	NUT, 1/4-20 LOK SS	2
100	0402114	NUT, 1/4-20 LOK REV SS	11
101	0402120	WASHER, 3/8 SS	8
102	0402123	NUT, 3/8-16 LOK SS	8
103	07005922	MOUNT-HYD GAUGE	1
104	0712230	BOSS, TURNTABLE LOCK	4
105	0722104	ANGLE - WINCH MOUNTING	4
106	0724651	COVER	2
107	08005607	WINCH MOUNT, 35K FRONT	2
108	08005608	WINCH MOUNT, 35K REAR	2
109	0806994	HOUSE LOCK INDICATOR WELDMENT	4
110	0810433	HHU CHAIN ROLLER BRACKET, LH	1
111	0810434	HHU CHAIN ROLLER BRACKET, RH	1
112	09000097	ILLUMINATED LEGEND ASSY-LT UPP	1
113	09000135	ILLUMINATED LEGEND ASSY-RT UPP	1
114	09002247	CONTROL ASSY, 11 HANDLE WV	1
115	09002910	PUMP KIT, 4K KNEE BOOM	1
116	09002949	ILLUM LEGEND LT 1150 KNEE	1
117	09004266	U/L BOOM ASSEMBLY (SHORT)	1
118	09009470	SUBFRAME ASSY, 1140 RXP KB 12V	1
119	0906532	SWIVEL - BOOM ASSEMBLY	1
120	0908418	KIT-MUDFLAP CENTURY ROTATOR	1
121	0910231	BOOM ASSEMBLY 1140 (3-STAGE)	1
122	0910232	WRECKER FRAME ASSEMBLY - 1140	1
123	0910411	KIT - REAR OUTRGR 4-STG LG BOS	1
124	0910838	BUA '10 ROT AL BODY W/ XP TRI	1
125	0910935	XBAR ASY HRDWR-XHD 5X5 CENTURY	1
126	0911237	ILLUM LEGEND ASSY RH LWR WLV	1
127	0911324	RH CTL STATION ASSY 5 WINCH WV	1
128	0911804	AIR REGULATOR-GAUGE ASSEMBLY	4
129	24773017	HOSE ASSEMBLY 140"LG	2
130	24773018	HOSE ASSEMBLY 140"LG	2
131	9010520	FITTING-ELBOW 1/4T-1/4NPT	5
132	9024041	SWITCH, ROCKER SPST RED 12V21A	22
133	9041402	1/2 NC X 1 1/4 HHCS PLT GR8	6
134	9041403	1/2 NC X 1 1/2 HHCS PL GR8	14
135	9402970	TOOLBOX MTG. PAD	14
136	942480011	PLATE,SLOT-SS REAR WASHER TBOX	16
137	AWS-6821-A	HOSE ASSY-PRESSURE	10
138	FC41	FITTING-90DEG BLKHD ELB W/ NUT	8
139	HC1291	FITTING, 4MJ-4MB STR THR	16

09009128 BASIC UNIT ASSEMBLY 1140 RXP KNEEBOOM (cont'd)

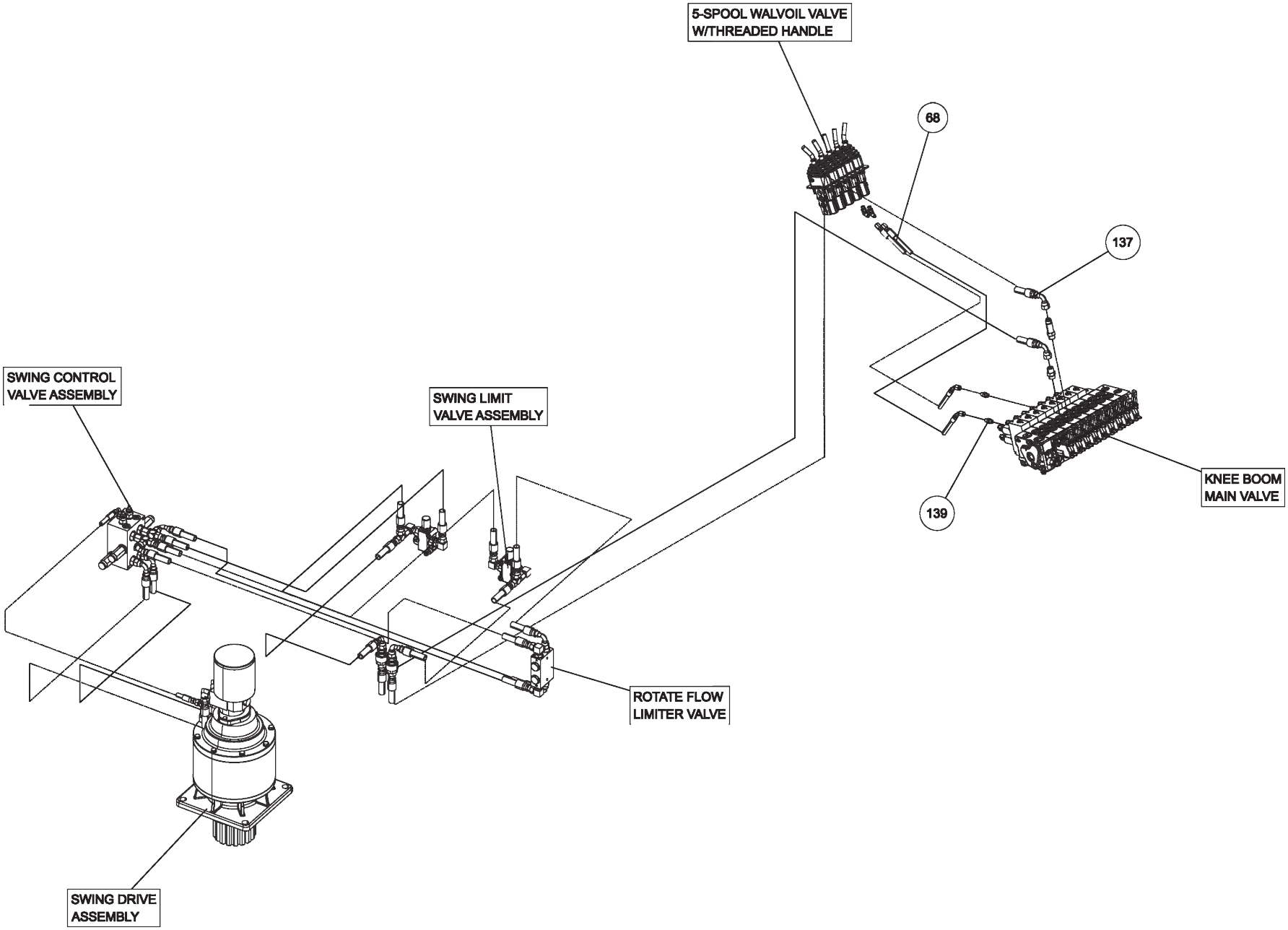

09009128 BASIC UNIT ASSEMBLY 1140 RXP KNEEBOOM (cont'd)

ITEM	PART NUMBER	DESCRIPTION	QTY
	09009128	BASIC UNIT ASSEMBLY 1140 RXP KB	
1	0300113	GREASE FITTING, 1/4-28 STR	1
2	03003419	HOSE, HYD 132" LG	1
3	03003420	HOSE, HYD 60" LG	1
4	03003421	HOSE, HYD 18"LG	3
5	03003424	HOSE, HYD 138"	1
6	03003425	HOSE, HYD 90" LG	4
7	03003426	HOSE, HYD 45" LG	6
8	0300364	CLAMP-HOSE,0.875"-2.75" 50"LBS	2
9	0300434	FITTING, HOSE BARB, 2	1
10	0300558	HOSE, SUCTION 2"ID 100R4 (C4)	1
11	0300835	KNOB-BOOM (UP-DOWN)	1
12	0300837	KNOB-BOOM (IN-OUT)	1
13	0300865	FITTING, CONNECTOR 8MJ-8MJ	5
14	0301113	HOSE HYD, 82"	2
15	0301207	HOSE HYD, 72"	4
16	0301377	FITTING, TEE,3/8" JIC	1
17	0301388	ELBOW, 8MJ-8MB90	3
18	0301422	FITTING, 6MJ-6MJ SMALL	4
19	0301473	HOSE HYD, 18" LG	2
20	0301522	ADAPTER, 6MJ-6MB	1
21	0301529	HOSE HYD, 58	2
22	03015922	STAUFF CLAMP, 3/8 TWIN	4
23	03016142	TUBE, HYD ASSY SF TO O/R	4
24	0301695	HOSE HYD, 91"	1
25	0301837	INLINE ORIFICE	4
26	0301909	RECEPTACLE BOOT	1
27	0301946	FITTING, BLKHD CONNECT	3
28	0301948	HD 7 WAY TRAILER CONNECT	1
29	0301961	BALL VALVE 2	1
30	0302056	HOSE HYD, 183"	5
31	0302205	GAUGE, FLUSH MNTG-6000 PSI	2
32	0302312	HOSE HYD, 43" LG 12G2AT	1
33	0302367	PIPE NIPPLE - 2 X 4	1
34	0302372	HOSE HYD, 240" LG	4
35	0302508	FITTING, ELL 8MJ-8MB 90LL	3
36	0302534	FITTING, 45 DEG ELBOW	2
37	0302604	HOSE HYD, 44"	2
38	0302632	HOSE HYD, 40"	8
39	0302805	HOSE HYD, 10"	1
40	0302856	KNOB-TILT, 3/8-16 THREAD	1
41	0302881	HOSE HYD, 45"	1
42	0303170	HOSE, HYD. 75"	1
43	0303340	HOSE HYD, 50" LG	1
44	0303379	KNOB, SWING CW - CCW	1
45	0303380	KNOB-UNDERLIFT (IN-OUT)	1
46	0303381	KNOB - UNDERLIFT (UP-DN)	1

ITEM	PART NUMBER	DESCRIPTION	QTY
47	0303391	HOSE 8AT2(8FJX-8FJ90) 110"	3
48	0303538	FITT, ADAPTER -BRASS 8FP-6MP	1
49	0303539	QUICK DISCONNECT 3/8 FPT	1
50	0303950	FITTING 45DEG DOT BRASS	1
51	0304363	QUICK DISCONNECT 1/2 FPT	2
52	0306537	EMERGENCY SWITCH	2
53	0306540	ROTARY SELECT SWITCH OPERATOR	12
54	0306870	HOSE HYDR - 96"	4
55	0306921	PIPE PLUG, 2" SQ HD	1
56	0307061	WINCH-35K dp 2-SP N.DRUM W/TEN	3
57	0307452	HOSE, HYD 146" LG	4
58	0307472	HOSE, HYD ASSY 24" LG	1
59	0307604	KNOB, RED LONG - SK0700-07	5
60	0310314	HOSE ASSY - 42" LG	4
61	0310456	PUSH BUTTN OPER W/MTG(RED) N/C	2
62	0310581	hose assy- 96" 8 fjx-10fjx90	4
63	0310637	PLUG, HOLE	2
64	0311191	ROLLER, POLY, 4" X 5/8"	2
65	0311305	T-BOLT CLAMP 1 3/8 TO 1 9/16	4
66	0311355	HOBBS HOURMETER	1
67	0311417	HOSE, 196" 3/8 2 X STRAIGHT	2
68	0311426	HOSE ASSY, 80" 4FJX-4FJX45	16
69	0311755	WATER SEPARATOR-MONNIER	1
70	0313129	HOSE, 1 SUCTION 16C4	34
71	0400005	SCREW, 6-32X1/2 PRH SS	6
72	0400012	LKWASHER, #8 SS	8
73	0400021	SCREW, 8-32X1/2 PRH SS	12
74	04000381	SS BHSCS 1/4-20 X 1	15
75	0400062	SCREW, 1/4-20X3/4 THC	3
76	0400066	SCREW, 1/4-20X3/4 HHC GR5	8
77	0400288	SCREW, 3/4-10X2-1/2 HHC GR8	16
78	0400307	SCREW, 7/8-9X4 HHC GR8	16
79	0400369	NUT, 1/4 SPR J	11
80	0400431	NUT, 3/4-10 LOK GR8	16
81	0400437	NUT, 7/8-9 LOK GR8	16
82	0400452	LKWASHER, 1/4	8
83	0400454	WASHER, 1/4 SS	2
84	0400473	WASHER, 7/8 PL GR8	16
85	0400489	WASHER, 3/4 SAE GR8	32
86	0400491	LKWASHER, 1/2	20
87	0400492	USS FLAT WASHER, 1/2	2
88	0400497	WASHER, 1/2 GR8	6
89	0400498	WASHER, 1/2X2X0.125	14
90	0400554	PIN, 3/8X1 SPR	3
91	0400900	NUT, 1/2-13 LOK JAM	2
92	0402020	SCREW, 1/4-20X3/4 HHC SS	2
93	0402021	SCREW, 1/4-20X1 HHC SS	13

ITEM	PART NUMBER	DESCRIPTION	QTY
94	0402044	SCREW, 3/8-16X1-1/2 HHC SS	8
95	0402080	WASHER, #8 SS	8
96	0402094	NUT, HEX 6-32 SS	6
97	0402110	WASHER, 1/4 SS	17
98	0402111	LKWASHER, 1/4 SS	30
99	0402113	NUT, 1/4-20 LOK SS	2
100	0402114	NUT, 1/4-20 LOK REV SS	11
101	0402120	WASHER, 3/8 SS	8
102	0402123	NUT, 3/8-16 LOK SS	8
103	07005922	MOUNT-HYD GAUGE	1
104	0712230	BOSS, TURNTABLE LOCK	4
105	0722104	ANGLE - WINCH MOUNTING	4
106	0724651	COVER	2
107	08005607	WINCH MOUNT, 35K FRONT	2
108	08005608	WINCH MOUNT, 35K REAR	2
109	0806994	HOUSE LOCK INDICATOR WELDMENT	4
110	0810433	HHU CHAIN ROLLER BRACKET, LH	1
111	0810434	HHU CHAIN ROLLER BRACKET, RH	1
112	09000097	ILLUMINATED LEGEND ASSY-LT UPP	1
113	09000135	ILLUMINATED LEGEND ASSY-RT UPP	1
114	09002247	CONTROL ASSY, 11 HANDLE WV	1
115	09002910	PUMP KIT, 4K KNEE BOOM	1
116	09002949	ILLUM LEGEND LT 1150 KNEE	1
117	09004266	U/L BOOM ASSEMBLY (SHORT)	1
118	09009470	SUBFRAME ASSY, 1140 RXP KB 12V	1
119	0906532	SWIVEL - BOOM ASSEMBLY	1
120	0908418	KIT-MUDFLAP CENTURY ROTATOR	1
121	0910231	BOOM ASSEMBLY 1140 (3-STAGE)	1
122	0910232	WRECKER FRAME ASSEMBLY - 1140	1
123	0910411	KIT - REAR OUTRGR 4-STG LG BOS	1
124	0910838	BUA '10 ROT AL BODY W/ XP TRI	1
125	0910935	XBAR ASY HRDWR-XHD 5X5 CENTURY	1
126	0911237	ILLUM LEGEND ASSY RH LWR WLV	1
127	0911324	RH CTL STATION ASSY 5 WINCH WV	1
128	0911804	AIR REGULATOR-GAUGE ASSEMBLY	4
129	24773017	HOSE ASSEMBLY 140"LG	2
130	24773018	HOSE ASSEMBLY 140"LG	2
131	9010520	FITTING-ELBOW 1/4T-1/4NPT	5
132	9024041	SWITCH, ROCKER SPST RED 12V21A	22
133	9041402	1/2 NC X 1 1/4 HHCS PLT GR8	6
134	9041403	1/2 NC X 1 1/2 HHCS PL GR8	14
135	9402970	TOOLBOX MTG. PAD	14
136	942480011	PLATE,SLOT-SS REAR WASHER TBOX	16
137	AWS-6821-A	HOSE ASSY-PRESSURE	10
138	FC41	FITTING-90DEG BLKHD ELB W/ NUT	8
139	HC1291	FITTING, 4MJ-4MB STR THR	16

09009128 BASIC UNIT ASSEMBLY 1140 RXP KNEEBOOM (cont'd)

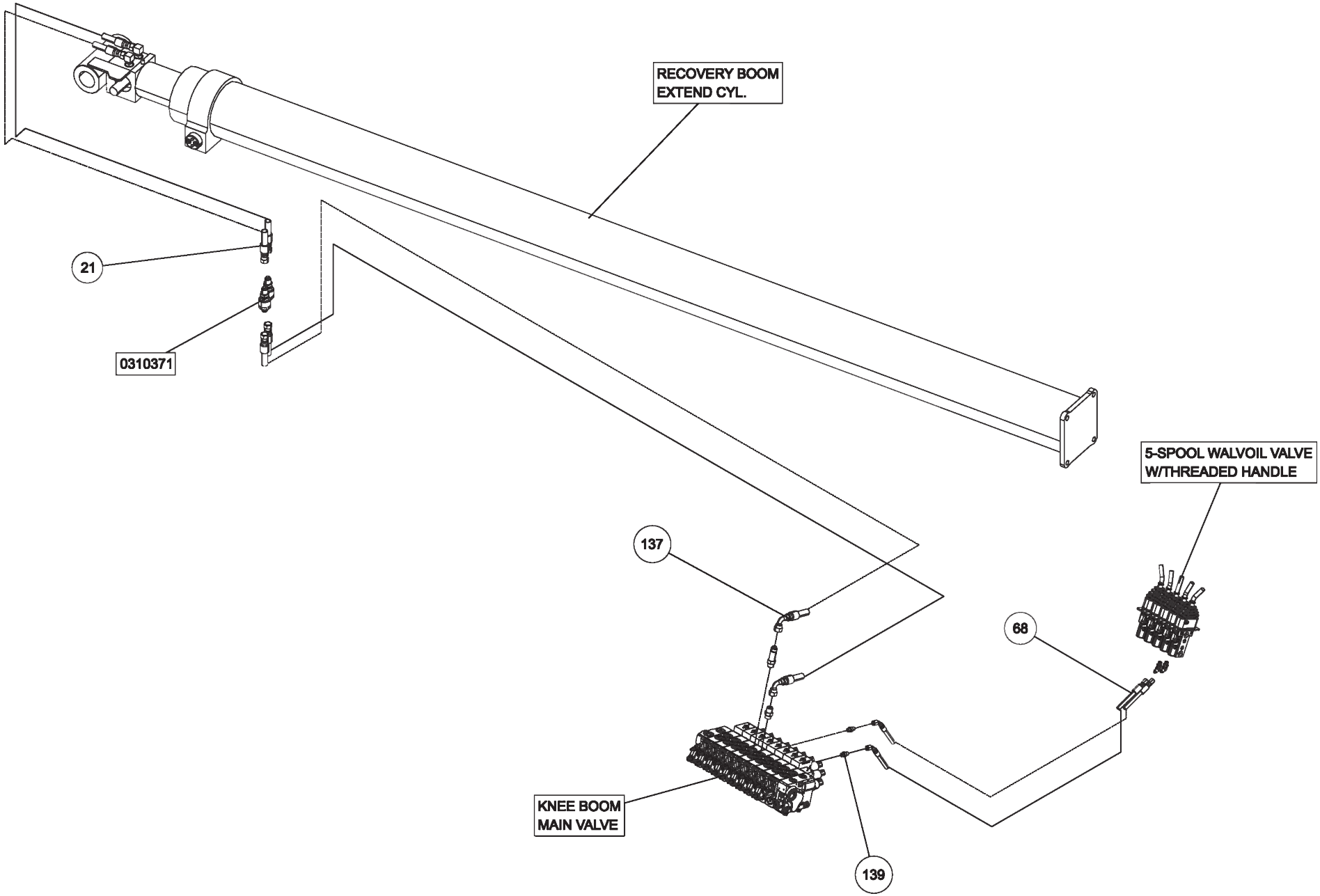

09009128 BASIC UNIT ASSEMBLY 1140 RXP KNEEBOOM (cont'd)

ITEM	PART NUMBER	DESCRIPTION	QTY
	09009128	BASIC UNIT ASSEMBLY 1140 RXP KB	
1	0300113	GREASE FITTING, 1/4-28 STR	1
2	03003419	HOSE, HYD 132" LG	1
3	03003420	HOSE, HYD 60" LG	1
4	03003421	HOSE, HYD 18"LG	3
5	03003424	HOSE, HYD 138"	1
6	03003425	HOSE, HYD 90" LG	4
7	03003426	HOSE, HYD 45" LG	6
8	0300364	CLAMP-HOSE,0.875"-2.75" 50"LBS	2
9	0300434	FITTING, HOSE BARB, 2	1
10	0300558	HOSE, SUCTION 2"ID 100R4 (C4)	1
11	0300835	KNOB-BOOM (UP-DOWN)	1
12	0300837	KNOB-BOOM (IN-OUT)	1
13	0300865	FITTING, CONNECTOR 8MJ-8MJ	5
14	0301113	HOSE HYD, 82"	2
15	0301207	HOSE HYD, 72"	4
16	0301377	FITTING, TEE,3/8" JIC	1
17	0301388	ELBOW, 8MJ-8MB90	3
18	0301422	FITTING, 6MJ-6MJ SMALL	4
19	0301473	HOSE HYD, 18" LG	2
20	0301522	ADAPTER, 6MJ-6MB	1
21	0301529	HOSE HYD, 58	2
22	03015922	STAUFF CLAMP, 3/8 TWIN	4
23	03016142	TUBE, HYD ASSY SF TO O/R	4
24	0301695	HOSE HYD, 91"	1
25	0301837	INLINE ORIFICE	4
26	0301909	RECEPTACLE BOOT	1
27	0301946	FITTING, BLKHD CONNECT	3
28	0301948	HD 7 WAY TRAILER CONNECT	1
29	0301961	BALL VALVE 2	1
30	0302056	HOSE HYD, 183"	5
31	0302205	GAUGE, FLUSH MNTG-6000 PSI	2
32	0302312	HOSE HYD, 43" LG 12G2AT	1
33	0302367	PIPE NIPPLE - 2 X 4	1
34	0302372	HOSE HYD, 240" LG	4
35	0302508	FITTING, ELL 8MJ-8MB 90LL	3
36	0302534	FITTING, 45 DEG ELBOW	2
37	0302604	HOSE HYD, 44"	2
38	0302632	HOSE HYD, 40"	8
39	0302805	HOSE HYD, 10"	1
40	0302856	KNOB-TILT, 3/8-16 THREAD	1
41	0302881	HOSE HYD, 45"	1
42	0303170	HOSE, HYD. 75"	1
43	0303340	HOSE HYD, 50" LG	1
44	0303379	KNOB, SWING CW - CCW	1
45	0303380	KNOB-UNDERLIFT (IN-OUT)	1
46	0303381	KNOB - UNDERLIFT (UP-DN)	1

ITEM	PART NUMBER	DESCRIPTION	QTY
47	0303391	HOSE 8AT2(8FJX-8FJ90) 110"	3
48	0303538	FITT, ADAPTER -BRASS 8FP-6MP	1
49	0303539	QUICK DISCONNECT 3/8 FPT	1
50	0303950	FITTING 45DEG DOT BRASS	1
51	0304363	QUICK DISCONNECT 1/2 FPT	2
52	0306537	EMERGENCY SWITCH	2
53	0306540	ROTARY SELECT SWITCH OPERATOR	12
54	0306870	HOSE HYDR - 96"	4
55	0306921	PIPE PLUG, 2" SQ HD	1
56	0307061	WINCH-35K dp 2-SP N.DRUM W/TEN	3
57	0307452	HOSE, HYD 146" LG	4
58	0307472	HOSE, HYD ASSY 24" LG	1
59	0307604	KNOB, RED LONG - SK0700-07	5
60	0310314	HOSE ASSY - 42" LG	4
61	0310456	PUSH BUTTN OPER W/MTG(RED) N/C	2
62	0310581	hose assy- 96" 8 fjx-10fjx90	4
63	0310637	PLUG, HOLE	2
64	0311191	ROLLER, POLY, 4" X 5/8"	2
65	0311305	T-BOLT CLAMP 1 3/8 TO 1 9/16	4
66	0311355	HOBBS HOURMETER	1
67	0311417	HOSE, 196" 3/8 2 X STRAIGHT	2
68	0311426	HOSE ASSY, 80" 4FJX-4FJX45	16
69	0311755	WATER SEPARATOR-MONNIER	1
70	0313129	HOSE, 1 SUCTION 16C4	34
71	0400005	SCREW, 6-32X1/2 PRH SS	6
72	0400012	LKWASHER, #8 SS	8
73	0400021	SCREW, 8-32X1/2 PRH SS	12
74	04000381	SS BHSCS 1/4-20 X 1	15
75	0400062	SCREW, 1/4-20X3/4 THC	3
76	0400066	SCREW, 1/4-20X3/4 HHC GR5	8
77	0400288	SCREW, 3/4-10X2-1/2 HHC GR8	16
78	0400307	SCREW, 7/8-9X4 HHC GR8	16
79	0400369	NUT, 1/4 SPR J	11
80	0400431	NUT, 3/4-10 LOK GR8	16
81	0400437	NUT, 7/8-9 LOK GR8	16
82	0400452	LKWASHER, 1/4	8
83	0400454	WASHER, 1/4 SS	2
84	0400473	WASHER, 7/8 PL GR8	16
85	0400489	WASHER, 3/4 SAE GR8	32
86	0400491	LKWASHER, 1/2	20
87	0400492	USS FLAT WASHER, 1/2	2
88	0400497	WASHER, 1/2 GR8	6
89	0400498	WASHER, 1/2X2X0.125	14
90	0400554	PIN, 3/8X1 SPR	3
91	0400900	NUT, 1/2-13 LOK JAM	2
92	0402020	SCREW, 1/4-20X3/4 HHC SS	2
93	0402021	SCREW, 1/4-20X1 HHC SS	13

ITEM	PART NUMBER	DESCRIPTION	QTY
94	0402044	SCREW, 3/8-16X1-1/2 HHC SS	8
95	0402080	WASHER, #8 SS	8
96	0402094	NUT, HEX 6-32 SS	6
97	0402110	WASHER, 1/4 SS	17
98	0402111	LKWASHER, 1/4 SS	30
99	0402113	NUT, 1/4-20 LOK SS	2
100	0402114	NUT, 1/4-20 LOK REV SS	11
101	0402120	WASHER, 3/8 SS	8
102	0402123	NUT, 3/8-16 LOK SS	8
103	07005922	MOUNT-HYD GAUGE	1
104	0712230	BOSS, TURNTABLE LOCK	4
105	0722104	ANGLE - WINCH MOUNTING	4
106	0724651	COVER	2
107	08005607	WINCH MOUNT, 35K FRONT	2
108	08005608	WINCH MOUNT, 35K REAR	2
109	0806994	HOUSE LOCK INDICATOR WELDMENT	4
110	0810433	HHU CHAIN ROLLER BRACKET, LH	1
111	0810434	HHU CHAIN ROLLER BRACKET, RH	1
112	09000097	ILLUMINATED LEGEND ASSY-LT UPP	1
113	09000135	ILLUMINATED LEGEND ASSY-RT UPP	1
114	09002247	CONTROL ASSY, 11 HANDLE WV	1
115	09002910	PUMP KIT, 4K KNEE BOOM	1
116	09002949	ILLUM LEGEND LT 1150 KNEE	1
117	09004266	U/L BOOM ASSEMBLY (SHORT)	1
118	09009470	SUBFRAME ASSY, 1140 RXP KB 12V	1
119	0906532	SWIVEL - BOOM ASSEMBLY	1
120	0908418	KIT-MUDFLAP CENTURY ROTATOR	1
121	0910231	BOOM ASSEMBLY 1140 (3-STAGE)	1
122	0910232	WRECKER FRAME ASSEMBLY - 1140	1
123	0910411	KIT - REAR OUTRGR 4-STG LG BOS	1
124	0910838	BUA '10 ROT AL BODY W/ XP TRI	1
125	0910935	XBAR ASY HRDWR-XHD 5X5 CENTURY	1
126	0911237	ILLUM LEGEND ASSY RH LWR WLV	1
127	0911324	RH CTL STATION ASSY 5 WINCH WV	1
128	0911804	AIR REGULATOR-GAUGE ASSEMBLY	4
129	24773017	HOSE ASSEMBLY 140"LG	2
130	24773018	HOSE ASSEMBLY 140"LG	2
131	9010520	FITTING-ELBOW 1/4T-1/4NPT	5
132	9024041	SWITCH, ROCKER SPST RED 12V21A	22
133	9041402	1/2 NC X 1 1/4 HHCS PLT GR8	6
134	9041403	1/2 NC X 1 1/2 HHCS PL GR8	14
135	9402970	TOOLBOX MTG. PAD	14
136	942480011	PLATE,SLOT-SS REAR WASHER TBOX	16
137	AWS-6821-A	HOSE ASSY-PRESSURE	10
138	FC41	FITTING-90DEG BLKHD ELB W/ NUT	8
139	HC1291	FITTING, 4MJ-4MB STR THR	16

09009128 BASIC UNIT ASSEMBLY 1140 RXP KNEEBOOM (cont'd)

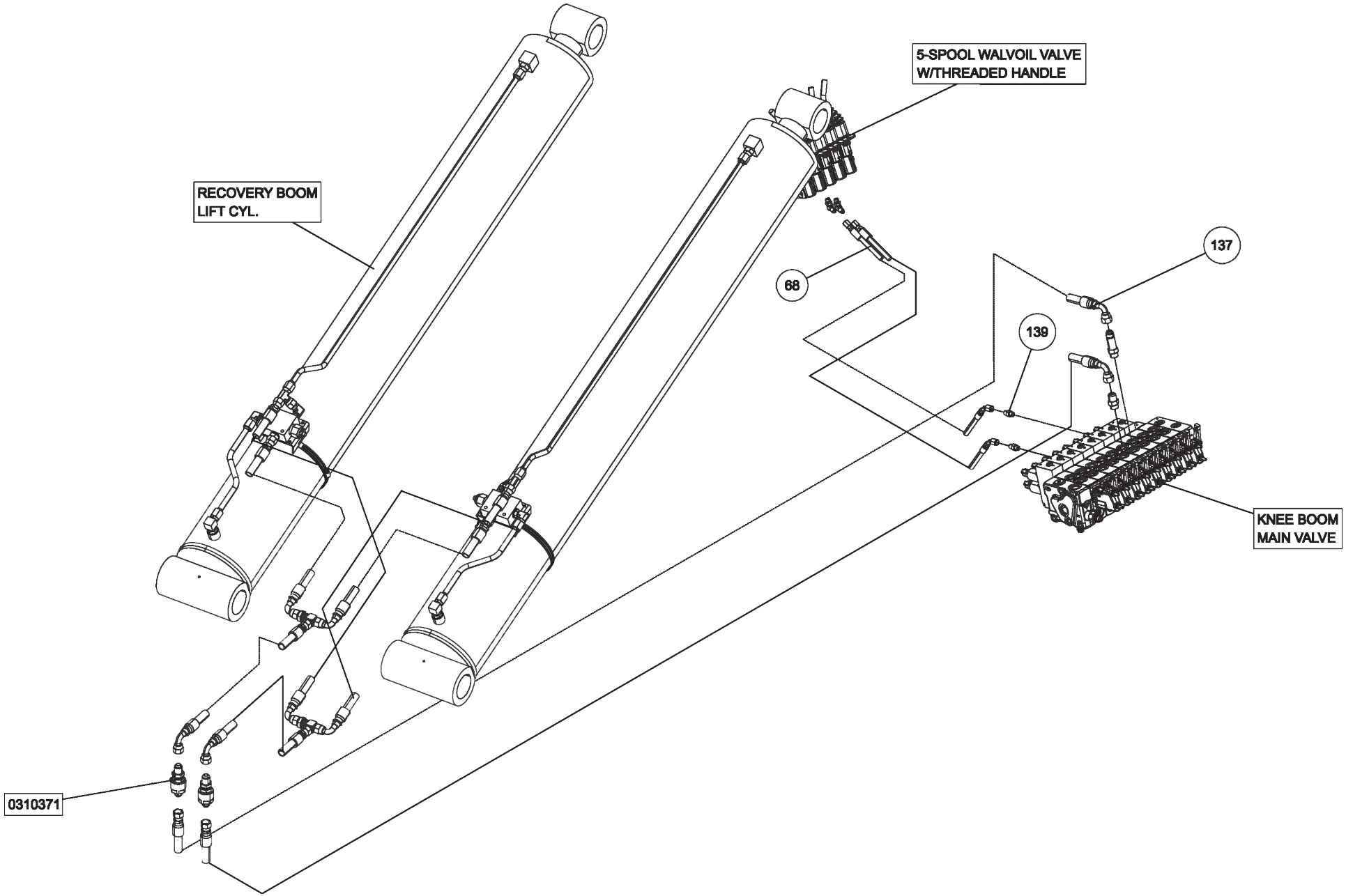

09009128 BASIC UNIT ASSEMBLY 1140 RXP KNEEBOOM (cont'd)

ITEM	PART NUMBER	DESCRIPTION	QTY
	09009128	BASIC UNIT ASSEMBLY 1140 RXP KB	
1	0300113	GREASE FITTING, 1/4-28 STR	1
2	03003419	HOSE, HYD 132" LG	1
3	03003420	HOSE, HYD 60" LG	1
4	03003421	HOSE, HYD 18"LG	3
5	03003424	HOSE, HYD 138"	1
6	03003425	HOSE, HYD 90" LG	4
7	03003426	HOSE, HYD 45" LG	6
8	0300364	CLAMP-HOSE,0.875"-2.75" 50"LBS	2
9	0300434	FITTING, HOSE BARB, 2	1
10	0300558	HOSE, SUCTION 2"ID 100R4 (C4)	1
11	0300835	KNOB-BOOM (UP-DOWN)	1
12	0300837	KNOB-BOOM (IN-OUT)	1
13	0300865	FITTING, CONNECTOR 8MJ-8MJ	5
14	0301113	HOSE HYD, 82"	2
15	0301207	HOSE HYD, 72"	4
16	0301377	FITTING, TEE,3/8" JIC	1
17	0301388	ELBOW, 8MJ-8MB90	3
18	0301422	FITTING, 6MJ-6MJ SMALL	4
19	0301473	HOSE HYD, 18" LG	2
20	0301522	ADAPTER, 6MJ-6MB	1
21	0301529	HOSE HYD, 58	2
22	03015922	STAUFF CLAMP, 3/8 TWIN	4
23	03016142	TUBE, HYD ASSY SF TO O/R	4
24	0301695	HOSE HYD, 91"	1
25	0301837	INLINE ORIFICE	4
26	0301909	RECEPTACLE BOOT	1
27	0301946	FITTING, BLKHD CONNECT	3
28	0301948	HD 7 WAY TRAILER CONNECT	1
29	0301961	BALL VALVE 2	1
30	0302056	HOSE HYD, 183"	5
31	0302205	GAUGE, FLUSH MNTG-6000 PSI	2
32	0302312	HOSE HYD, 43" LG 12G2AT	1
33	0302367	PIPE NIPPLE - 2 X 4	1
34	0302372	HOSE HYD, 240" LG	4
35	0302508	FITTING, ELL 8MJ-8MB 90LL	3
36	0302534	FITTING, 45 DEG ELBOW	2
37	0302604	HOSE HYD, 44"	2
38	0302632	HOSE HYD, 40"	8
39	0302805	HOSE HYD, 10"	1
40	0302856	KNOB-TILT, 3/8-16 THREAD	1
41	0302881	HOSE HYD, 45"	1
42	0303170	HOSE, HYD. 75"	1
43	0303340	HOSE HYD, 50" LG	1
44	0303379	KNOB, SWING CW - CCW	1
45	0303380	KNOB-UNDERLIFT (IN-OUT)	1
46	0303381	KNOB - UNDERLIFT (UP-DN)	1

ITEM	PART NUMBER	DESCRIPTION	QTY
47	0303391	HOSE 8AT2(8FJX-8FJ90) 110"	3
48	0303538	FITT, ADAPTER -BRASS 8FP-6MP	1
49	0303539	QUICK DISCONNECT 3/8 FPT	1
50	0303950	FITTING 45DEG DOT BRASS	1
51	0304363	QUICK DISCONNECT 1/2 FPT	2
52	0306537	EMERGENCY SWITCH	2
53	0306540	ROTARY SELECT SWITCH OPERATOR	12
54	0306870	HOSE HYDR - 96"	4
55	0306921	PIPE PLUG, 2" SQ HD	1
56	0307061	WINCH-35K dp 2-SP N.DRUM W/TEN	3
57	0307452	HOSE, HYD 146" LG	4
58	0307472	HOSE, HYD ASSY 24" LG	1
59	0307604	KNOB, RED LONG - SK0700-07	5
60	0310314	HOSE ASSY - 42" LG	4
61	0310456	PUSH BUTTN OPER W/MTG(RED) N/C	2
62	0310581	hose assy- 96" 8 fjx-10fjx90	4
63	0310637	PLUG, HOLE	2
64	0311191	ROLLER, POLY, 4" X 5/8"	2
65	0311305	T-BOLT CLAMP 1 3/8 TO 1 9/16	4
66	0311355	HOBBS HOURMETER	1
67	0311417	HOSE, 196" 3/8 2 X STRAIGHT	2
68	0311426	HOSE ASSY, 80" 4FJX-4FJX45	16
69	0311755	WATER SEPARATOR-MONNIER	1
70	0313129	HOSE, 1 SUCTION 16C4	34
71	0400005	SCREW, 6-32X1/2 PRH SS	6
72	0400012	LKWASHER, #8 SS	8
73	0400021	SCREW, 8-32X1/2 PRH SS	12
74	04000381	SS BHSCS 1/4-20 X 1	15
75	0400062	SCREW, 1/4-20X3/4 THC	3
76	0400066	SCREW, 1/4-20X3/4 HHC GR5	8
77	0400288	SCREW, 3/4-10X2-1/2 HHC GR8	16
78	0400307	SCREW, 7/8-9X4 HHC GR8	16
79	0400369	NUT, 1/4 SPR J	11
80	0400431	NUT, 3/4-10 LOK GR8	16
81	0400437	NUT, 7/8-9 LOK GR8	16
82	0400452	LKWASHER, 1/4	8
83	0400454	WASHER, 1/4 SS	2
84	0400473	WASHER, 7/8 PL GR8	16
85	0400489	WASHER, 3/4 SAE GR8	32
86	0400491	LKWASHER, 1/2	20
87	0400492	USS FLAT WASHER, 1/2	2
88	0400497	WASHER, 1/2 GR8	6
89	0400498	WASHER, 1/2X2X0.125	14
90	0400554	PIN, 3/8X1 SPR	3
91	0400900	NUT, 1/2-13 LOK JAM	2
92	0402020	SCREW, 1/4-20X3/4 HHC SS	2
93	0402021	SCREW, 1/4-20X1 HHC SS	13

ITEM	PART NUMBER	DESCRIPTION	QTY
94	0402044	SCREW, 3/8-16X1-1/2 HHC SS	8
95	0402080	WASHER, #8 SS	8
96	0402094	NUT, HEX 6-32 SS	6
97	0402110	WASHER, 1/4 SS	17
98	0402111	LKWASHER, 1/4 SS	30
99	0402113	NUT, 1/4-20 LOK SS	2
100	0402114	NUT, 1/4-20 LOK REV SS	11
101	0402120	WASHER, 3/8 SS	8
102	0402123	NUT, 3/8-16 LOK SS	8
103	07005922	MOUNT-HYD GAUGE	1
104	0712230	BOSS, TURNTABLE LOCK	4
105	0722104	ANGLE - WINCH MOUNTING	4
106	0724651	COVER	2
107	08005607	WINCH MOUNT, 35K FRONT	2
108	08005608	WINCH MOUNT, 35K REAR	2
109	0806994	HOUSE LOCK INDICATOR WELDMENT	4
110	0810433	HHU CHAIN ROLLER BRACKET, LH	1
111	0810434	HHU CHAIN ROLLER BRACKET, RH	1
112	09000097	ILLUMINATED LEGEND ASSY-LT UPP	1
113	09000135	ILLUMINATED LEGEND ASSY-RT UPP	1
114	09002247	CONTROL ASSY, 11 HANDLE WV	1
115	09002910	PUMP KIT, 4K KNEE BOOM	1
116	09002949	ILLUM LEGEND LT 1150 KNEE	1
117	09004266	U/L BOOM ASSEMBLY (SHORT)	1
118	09009470	SUBFRAME ASSY, 1140 RXP KB 12V	1
119	0906532	SWIVEL - BOOM ASSEMBLY	1
120	0908418	KIT-MUDFLAP CENTURY ROTATOR	1
121	0910231	BOOM ASSEMBLY 1140 (3-STAGE)	1
122	0910232	WRECKER FRAME ASSEMBLY - 1140	1
123	0910411	KIT - REAR OUTRGR 4-STG LG BOS	1
124	0910838	BUA '10 ROT AL BODY W/ XP TRI	1
125	0910935	XBAR ASY HRDWR-XHD 5X5 CENTURY	1
126	0911237	ILLUM LEGEND ASSY RH LWR WLV	1
127	0911324	RH CTL STATION ASSY 5 WINCH WV	1
128	0911804	AIR REGULATOR-GAUGE ASSEMBLY	4
129	24773017	HOSE ASSEMBLY 140"LG	2
130	24773018	HOSE ASSEMBLY 140"LG	2
131	9010520	FITTING-ELBOW 1/4T-1/4NPT	5
132	9024041	SWITCH, ROCKER SPST RED 12V21A	22
133	9041402	1/2 NC X 1 1/4 HHCS PLT GR8	6
134	9041403	1/2 NC X 1 1/2 HHCS PL GR8	14
135	9402970	TOOLBOX MTG. PAD	14
136	942480011	PLATE,SLOT-SS REAR WASHER TBOX	16
137	AWS-6821-A	HOSE ASSY-PRESSURE	10
138	FC41	FITTING-90DEG BLKHD ELB W/ NUT	8
139	HC1291	FITTING, 4MJ-4MB STR THR	16

09009128 BASIC UNIT ASSEMBLY 1140 RXP KNEEBOOM (cont'd)

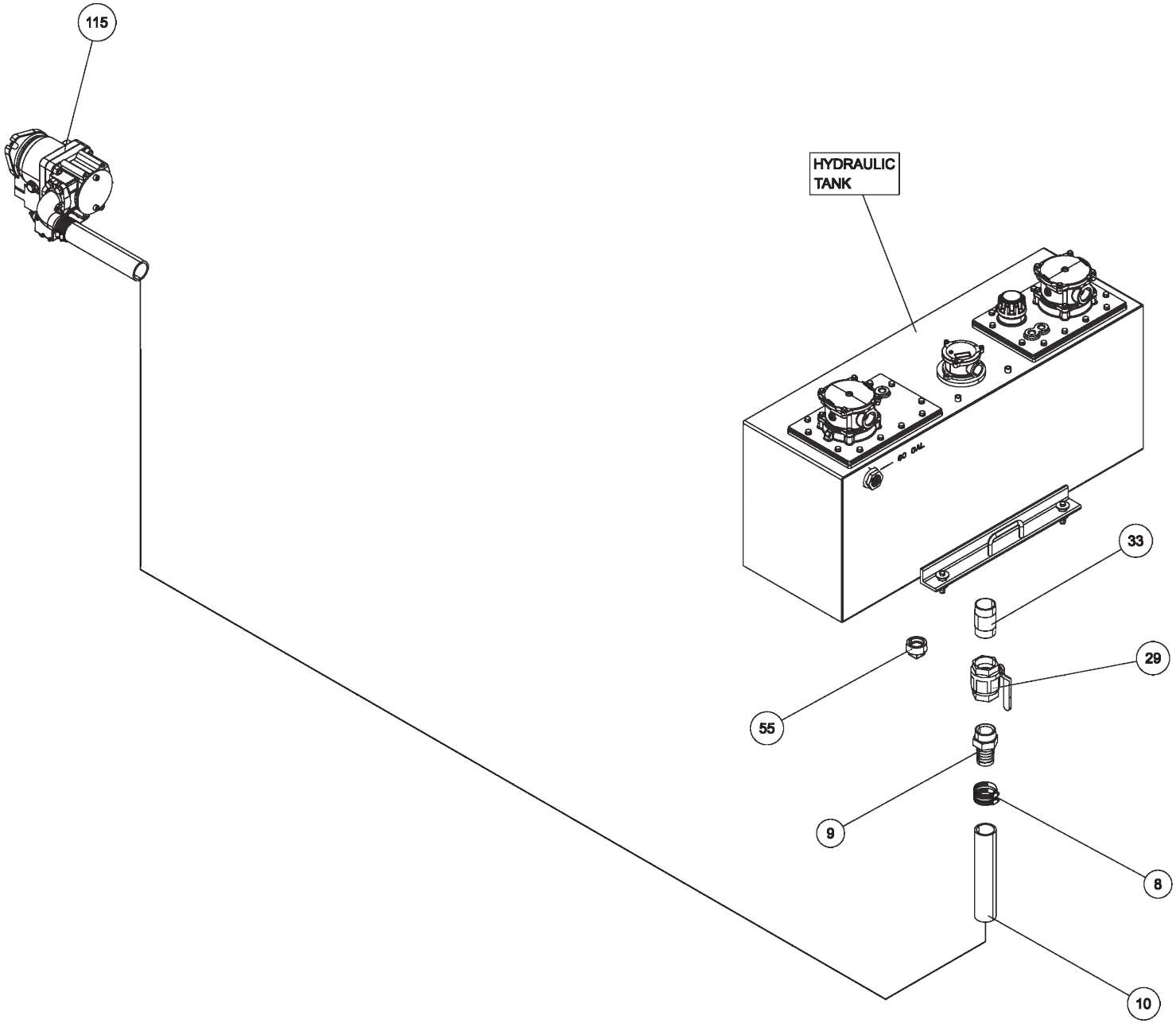

09009128 BASIC UNIT ASSEMBLY 1140 RXP KNEEBOOM (cont'd)

ITEM	PART NUMBER	DESCRIPTION	QTY
	09009128	BASIC UNIT ASSEMBLY 1140 RXP KB	
1	0300113	GREASE FITTING, 1/4-28 STR	1
2	03003419	HOSE, HYD 132" LG	1
3	03003420	HOSE, HYD 60" LG	1
4	03003421	HOSE, HYD 18"LG	3
5	03003424	HOSE, HYD 138"	1
6	03003425	HOSE, HYD 90" LG	4
7	03003426	HOSE, HYD 45" LG	6
8	0300364	CLAMP-HOSE,0.875"-2.75" 50"LBS	2
9	0300434	FITTING, HOSE BARB, 2	1
10	0300558	HOSE, SUCTION 2"ID 100R4 (C4)	1
11	0300835	KNOB-BOOM (UP-DOWN)	1
12	0300837	KNOB-BOOM (IN-OUT)	1
13	0300865	FITTING, CONNECTOR 8MJ-8MJ	5
14	0301113	HOSE HYD, 82"	2
15	0301207	HOSE HYD, 72"	4
16	0301377	FITTING, TEE,3/8" JIC	1
17	0301388	ELBOW, 8MJ-8MB90	3
18	0301422	FITTING, 6MJ-6MJ SMALL	4
19	0301473	HOSE HYD, 18" LG	2
20	0301522	ADAPTER, 6MJ-6MB	1
21	0301529	HOSE HYD, 58	2
22	03015922	STAUFF CLAMP, 3/8 TWIN	4
23	03016142	TUBE, HYD ASSY SF TO O/R	4
24	0301695	HOSE HYD, 91"	1
25	0301837	INLINE ORIFICE	4
26	0301909	RECEPTACLE BOOT	1
27	0301946	FITTING, BLKHD CONNECT	3
28	0301948	HD 7 WAY TRAILER CONNECT	1
29	0301961	BALL VALVE 2	1
30	0302056	HOSE HYD, 183"	5
31	0302205	GAUGE, FLUSH MNTG-6000 PSI	2
32	0302312	HOSE HYD, 43" LG 12G2AT	1
33	0302367	PIPE NIPPLE - 2 X 4	1
34	0302372	HOSE HYD, 240" LG	4
35	0302508	FITTING, ELL 8MJ-8MB 90LL	3
36	0302534	FITTING, 45 DEG ELBOW	2
37	0302604	HOSE HYD, 44"	2
38	0302632	HOSE HYD, 40"	8
39	0302805	HOSE HYD, 10"	1
40	0302856	KNOB-TILT, 3/8-16 THREAD	1
41	0302881	HOSE HYD, 45"	1
42	0303170	HOSE, HYD. 75"	1
43	0303340	HOSE HYD, 50" LG	1
44	0303379	KNOB, SWING CW - CCW	1
45	0303380	KNOB-UNDERLIFT (IN-OUT)	1
46	0303381	KNOB - UNDERLIFT (UP-DN)	1

ITEM	PART NUMBER	DESCRIPTION	QTY
47	0303391	HOSE 8AT2(8FJX-8FJ90) 110"	3
48	0303538	FITT, ADAPTER -BRASS 8FP-6MP	1
49	0303539	QUICK DISCONNECT 3/8 FPT	1
50	0303950	FITTING 45DEG DOT BRASS	1
51	0304363	QUICK DISCONNECT 1/2 FPT	2
52	0306537	EMERGENCY SWITCH	2
53	0306540	ROTARY SELECT SWITCH OPERATOR	12
54	0306870	HOSE HYDR - 96"	4
55	0306921	PIPE PLUG, 2" SQ HD	1
56	0307061	WINCH-35K dp 2-SP N.DRUM W/TEN	3
57	0307452	HOSE, HYD 146" LG	4
58	0307472	HOSE, HYD ASSY 24" LG	1
59	0307604	KNOB, RED LONG - SK0700-07	5
60	0310314	HOSE ASSY - 42" LG	4
61	0310456	PUSH BUTTN OPER W/MTG(RED) N/C	2
62	0310581	hose assy- 96" 8 fjx-10fjx90	4
63	0310637	PLUG, HOLE	2
64	0311191	ROLLER, POLY, 4" X 5/8"	2
65	0311305	T-BOLT CLAMP 1 3/8 TO 1 9/16	4
66	0311355	HOBBS HOURMETER	1
67	0311417	HOSE, 196" 3/8 2 X STRAIGHT	2
68	0311426	HOSE ASSY, 80" 4FJX-4FJX45	16
69	0311755	WATER SEPARATOR-MONNIER	1
70	0313129	HOSE, 1 SUCTION 16C4	34
71	0400005	SCREW, 6-32X1/2 PRH SS	6
72	0400012	LKWASHER, #8 SS	8
73	0400021	SCREW, 8-32X1/2 PRH SS	12
74	04000381	SS BHSCS 1/4-20 X 1	15
75	0400062	SCREW, 1/4-20X3/4 THC	3
76	0400066	SCREW, 1/4-20X3/4 HHC GR5	8
77	0400288	SCREW, 3/4-10X2-1/2 HHC GR8	16
78	0400307	SCREW, 7/8-9X4 HHC GR8	16
79	0400369	NUT, 1/4 SPR J	11
80	0400431	NUT, 3/4-10 LOK GR8	16
81	0400437	NUT, 7/8-9 LOK GR8	16
82	0400452	LKWASHER, 1/4	8
83	0400454	WASHER, 1/4 SS	2
84	0400473	WASHER, 7/8 PL GR8	16
85	0400489	WASHER, 3/4 SAE GR8	32
86	0400491	LKWASHER, 1/2	20
87	0400492	USS FLAT WASHER, 1/2	2
88	0400497	WASHER, 1/2 GR8	6
89	0400498	WASHER, 1/2X2X0.125	14
90	0400554	PIN, 3/8X1 SPR	3
91	0400900	NUT, 1/2-13 LOK JAM	2
92	0402020	SCREW, 1/4-20X3/4 HHC SS	2
93	0402021	SCREW, 1/4-20X1 HHC SS	13

ITEM	PART NUMBER	DESCRIPTION	QTY
94	0402044	SCREW, 3/8-16X1-1/2 HHC SS	8
95	0402080	WASHER, #8 SS	8
96	0402094	NUT, HEX 6-32 SS	6
97	0402110	WASHER, 1/4 SS	17
98	0402111	LKWASHER, 1/4 SS	30
99	0402113	NUT, 1/4-20 LOK SS	2
100	0402114	NUT, 1/4-20 LOK REV SS	11
101	0402120	WASHER, 3/8 SS	8
102	0402123	NUT, 3/8-16 LOK SS	8
103	07005922	MOUNT-HYD GAUGE	1
104	0712230	BOSS, TURNTABLE LOCK	4
105	0722104	ANGLE - WINCH MOUNTING	4
106	0724651	COVER	2
107	08005607	WINCH MOUNT, 35K FRONT	2
108	08005608	WINCH MOUNT, 35K REAR	2
109	0806994	HOUSE LOCK INDICATOR WELDMENT	4
110	0810433	HHU CHAIN ROLLER BRACKET, LH	1
111	0810434	HHU CHAIN ROLLER BRACKET, RH	1
112	09000097	ILLUMINATED LEGEND ASSY-LT UPP	1
113	09000135	ILLUMINATED LEGEND ASSY-RT UPP	1
114	09002247	CONTROL ASSY, 11 HANDLE WV	1
115	09002910	PUMP KIT, 4K KNEE BOOM	1
116	09002949	ILLUM LEGEND LT 1150 KNEE	1
117	09004266	U/L BOOM ASSEMBLY (SHORT)	1
118	09009470	SUBFRAME ASSY, 1140 RXP KB 12V	1
119	0906532	SWIVEL - BOOM ASSEMBLY	1
120	0908418	KIT-MUDFLAP CENTURY ROTATOR	1
121	0910231	BOOM ASSEMBLY 1140 (3-STAGE)	1
122	0910232	WRECKER FRAME ASSEMBLY - 1140	1
123	0910411	KIT - REAR OUTRGR 4-STG LG BOS	1
124	0910838	BUA '10 ROT AL BODY W/ XP TRI	1
125	0910935	XBAR ASY HRDWR-XHD 5X5 CENTURY	1
126	0911237	ILLUM LEGEND ASSY RH LWR WLV	1
127	0911324	RH CTL STATION ASSY 5 WINCH WV	1
128	0911804	AIR REGULATOR-GAUGE ASSEMBLY	4
129	24773017	HOSE ASSEMBLY 140"LG	2
130	24773018	HOSE ASSEMBLY 140"LG	2
131	9010520	FITTING-ELBOW 1/4T-1/4NPT	5
132	9024041	SWITCH, ROCKER SPST RED 12V21A	22
133	9041402	1/2 NC X 1 1/4 HHCS PLT GR8	6
134	9041403	1/2 NC X 1 1/2 HHCS PL GR8	14
135	9402970	TOOLBOX MTG. PAD	14
136	942480011	PLATE,SLOT-SS REAR WASHER TBOX	16
137	AWS-6821-A	HOSE ASSY-PRESSURE	10
138	FC41	FITTING-90DEG BLKHD ELB W/ NUT	8
139	HC1291	FITTING, 4MJ-4MB STR THR	16

09009128 BASIC UNIT ASSEMBLY 1140 RXP KNEEBOOM (cont'd)

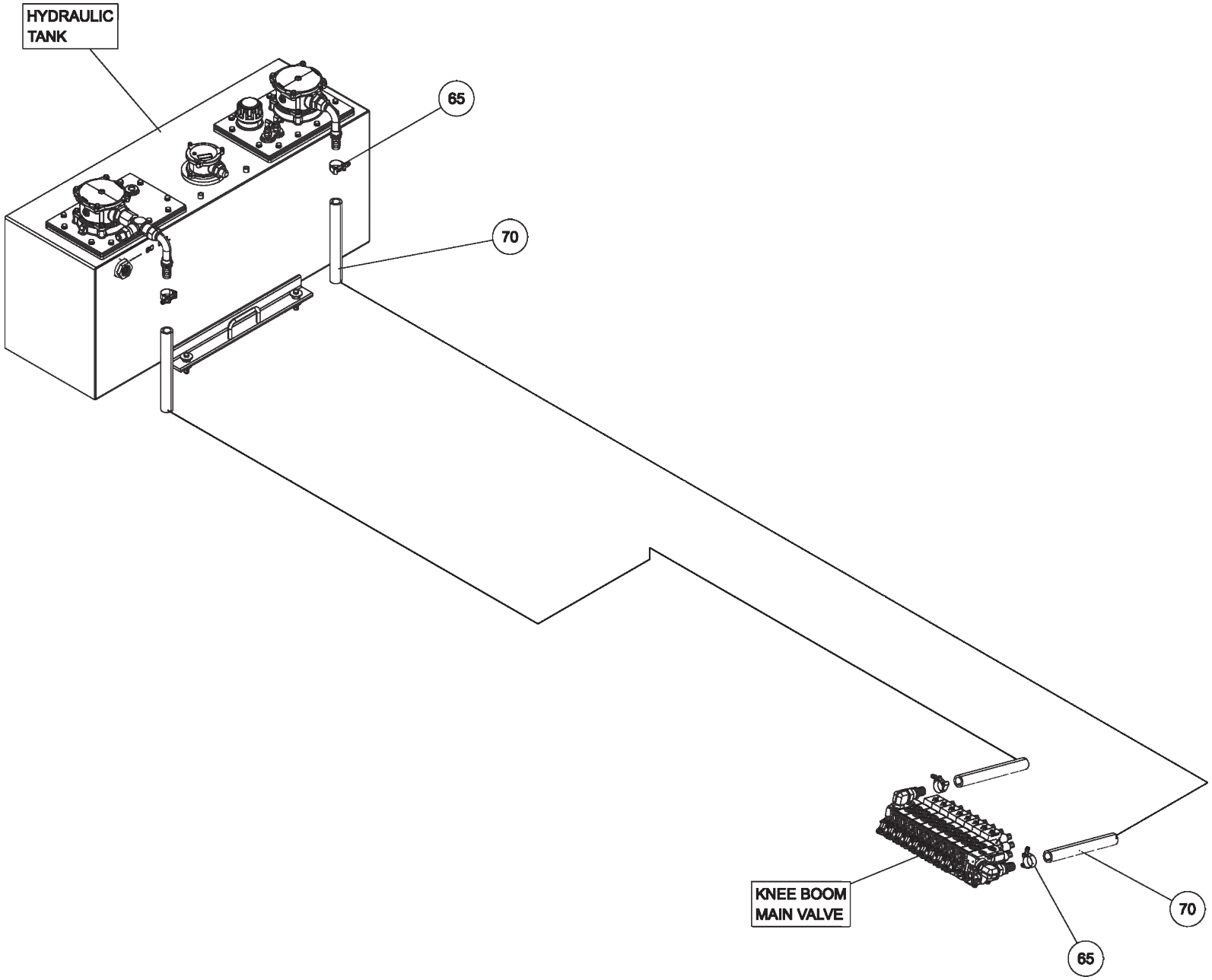

09009128 BASIC UNIT ASSEMBLY 1140 RXP KNEEBOOM (cont'd)

ITEM	PART NUMBER	DESCRIPTION	QTY
	09009128	BASIC UNIT ASSEMBLY 1140 RXP KB	
1	0300113	GREASE FITTING, 1/4-28 STR	1
2	03003419	HOSE, HYD 132" LG	1
3	03003420	HOSE, HYD 60" LG	1
4	03003421	HOSE, HYD 18"LG	3
5	03003424	HOSE, HYD 138"	1
6	03003425	HOSE, HYD 90" LG	4
7	03003426	HOSE, HYD 45" LG	6
8	0300364	CLAMP-HOSE,0.875"-2.75" 50"LBS	2
9	0300434	FITTING, HOSE BARB, 2	1
10	0300558	HOSE, SUCTION 2"ID 100R4 (C4)	1
11	0300835	KNOB-BOOM (UP-DOWN)	1
12	0300837	KNOB-BOOM (IN-OUT)	1
13	0300865	FITTING, CONNECTOR 8MJ-8MJ	5
14	0301113	HOSE HYD, 82"	2
15	0301207	HOSE HYD, 72"	4
16	0301377	FITTING, TEE,3/8" JIC	1
17	0301388	ELBOW, 8MJ-8MB90	3
18	0301422	FITTING, 6MJ-6MJ SMALL	4
19	0301473	HOSE HYD, 18" LG	2
20	0301522	ADAPTER, 6MJ-6MB	1
21	0301529	HOSE HYD, 58	2
22	03015922	STAUFF CLAMP, 3/8 TWIN	4
23	03016142	TUBE, HYD ASSY SF TO O/R	4
24	0301695	HOSE HYD, 91"	1
25	0301837	INLINE ORIFICE	4
26	0301909	RECEPTACLE BOOT	1
27	0301946	FITTING, BLKHD CONNECT	3
28	0301948	HD 7 WAY TRAILER CONNECT	1
29	0301961	BALL VALVE 2	1
30	0302056	HOSE HYD, 183"	5
31	0302205	GAUGE, FLUSH MNTG-6000 PSI	2
32	0302312	HOSE HYD, 43" LG 12G2AT	1
33	0302367	PIPE NIPPLE - 2 X 4	1
34	0302372	HOSE HYD, 240" LG	4
35	0302508	FITTING, ELL 8MJ-8MB 90LL	3
36	0302534	FITTING, 45 DEG ELBOW	2
37	0302604	HOSE HYD, 44"	2
38	0302632	HOSE HYD, 40"	8
39	0302805	HOSE HYD, 10"	1
40	0302856	KNOB-TILT, 3/8-16 THREAD	1
41	0302881	HOSE HYD, 45"	1
42	0303170	HOSE, HYD. 75"	1
43	0303340	HOSE HYD, 50" LG	1
44	0303379	KNOB, SWING CW - CCW	1
45	0303380	KNOB-UNDERLIFT (IN-OUT)	1
46	0303381	KNOB - UNDERLIFT (UP-DN)	1

ITEM	PART NUMBER	DESCRIPTION	QTY
47	0303391	HOSE 8AT2(8FJX-8FJ90) 110"	3
48	0303538	FITT, ADAPTER -BRASS 8FP-6MP	1
49	0303539	QUICK DISCONNECT 3/8 FPT	1
50	0303950	FITTING 45DEG DOT BRASS	1
51	0304363	QUICK DISCONNECT 1/2 FPT	2
52	0306537	EMERGENCY SWITCH	2
53	0306540	ROTARY SELECT SWITCH OPERATOR	12
54	0306870	HOSE HYDR - 96"	4
55	0306921	PIPE PLUG, 2" SQ HD	1
56	0307061	WINCH-35K dp 2-SP N.DRUM W/TEN	3
57	0307452	HOSE, HYD 146" LG	4
58	0307472	HOSE, HYD ASSY 24" LG	1
59	0307604	KNOB, RED LONG - SK0700-07	5
60	0310314	HOSE ASSY - 42" LG	4
61	0310456	PUSH BUTTN OPER W/MTG(RED) N/C	2
62	0310581	hose assy- 96" 8 fjx-10fjx90	4
63	0310637	PLUG, HOLE	2
64	0311191	ROLLER, POLY, 4" X 5/8"	2
65	0311305	T-BOLT CLAMP 1 3/8 TO 1 9/16	4
66	0311355	HOBBS HOURMETER	1
67	0311417	HOSE, 196" 3/8 2 X STRAIGHT	2
68	0311426	HOSE ASSY, 80" 4FJX-4FJX45	16
69	0311755	WATER SEPARATOR-MONNIER	1
70	0313129	HOSE, 1 SUCTION 16C4	34
71	0400005	SCREW, 6-32X1/2 PRH SS	6
72	0400012	LKWASHER, #8 SS	8
73	0400021	SCREW, 8-32X1/2 PRH SS	12
74	04000381	SS BHSCS 1/4-20 X 1	15
75	0400062	SCREW, 1/4-20X3/4 THC	3
76	0400066	SCREW, 1/4-20X3/4 HHC GR5	8
77	0400288	SCREW, 3/4-10X2-1/2 HHC GR8	16
78	0400307	SCREW, 7/8-9X4 HHC GR8	16
79	0400369	NUT, 1/4 SPR J	11
80	0400431	NUT, 3/4-10 LOK GR8	16
81	0400437	NUT, 7/8-9 LOK GR8	16
82	0400452	LKWASHER, 1/4	8
83	0400454	WASHER, 1/4 SS	2
84	0400473	WASHER, 7/8 PL GR8	16
85	0400489	WASHER, 3/4 SAE GR8	32
86	0400491	LKWASHER, 1/2	20
87	0400492	USS FLAT WASHER, 1/2	2
88	0400497	WASHER, 1/2 GR8	6
89	0400498	WASHER, 1/2X2X0.125	14
90	0400554	PIN, 3/8X1 SPR	3
91	0400900	NUT, 1/2-13 LOK JAM	2
92	0402020	SCREW, 1/4-20X3/4 HHC SS	2
93	0402021	SCREW, 1/4-20X1 HHC SS	13

ITEM	PART NUMBER	DESCRIPTION	QTY
94	0402044	SCREW, 3/8-16X1-1/2 HHC SS	8
95	0402080	WASHER, #8 SS	8
96	0402094	NUT, HEX 6-32 SS	6
97	0402110	WASHER, 1/4 SS	17
98	0402111	LKWASHER, 1/4 SS	30
99	0402113	NUT, 1/4-20 LOK SS	2
100	0402114	NUT, 1/4-20 LOK REV SS	11
101	0402120	WASHER, 3/8 SS	8
102	0402123	NUT, 3/8-16 LOK SS	8
103	07005922	MOUNT-HYD GAUGE	1
104	0712230	BOSS, TURNTABLE LOCK	4
105	0722104	ANGLE - WINCH MOUNTING	4
106	0724651	COVER	2
107	08005607	WINCH MOUNT, 35K FRONT	2
108	08005608	WINCH MOUNT, 35K REAR	2
109	0806994	HOUSE LOCK INDICATOR WELDMENT	4
110	0810433	HHU CHAIN ROLLER BRACKET, LH	1
111	0810434	HHU CHAIN ROLLER BRACKET, RH	1
112	09000097	ILLUMINATED LEGEND ASSY-LT UPP	1
113	09000135	ILLUMINATED LEGEND ASSY-RT UPP	1
114	09002247	CONTROL ASSY, 11 HANDLE WV	1
115	09002910	PUMP KIT, 4K KNEE BOOM	1
116	09002949	ILLUM LEGEND LT 1150 KNEE	1
117	09004266	U/L BOOM ASSEMBLY (SHORT)	1
118	09009470	SUBFRAME ASSY, 1140 RXP KB 12V	1
119	0906532	SWIVEL - BOOM ASSEMBLY	1
120	0908418	KIT-MUDFLAP CENTURY ROTATOR	1
121	0910231	BOOM ASSEMBLY 1140 (3-STAGE)	1
122	0910232	WRECKER FRAME ASSEMBLY - 1140	1
123	0910411	KIT - REAR OUTRGR 4-STG LG BOS	1
124	0910838	BUA '10 ROT AL BODY W/ XP TRI	1
125	0910935	XBAR ASY HRDWR-XHD 5X5 CENTURY	1
126	0911237	ILLUM LEGEND ASSY RH LWR WLV	1
127	0911324	RH CTL STATION ASSY 5 WINCH WV	1
128	0911804	AIR REGULATOR-GAUGE ASSEMBLY	4
129	24773017	HOSE ASSEMBLY 140"LG	2
130	24773018	HOSE ASSEMBLY 140"LG	2
131	9010520	FITTING-ELBOW 1/4T-1/4NPT	5
132	9024041	SWITCH, ROCKER SPST RED 12V21A	22
133	9041402	1/2 NC X 1 1/4 HHCS PLT GR8	6
134	9041403	1/2 NC X 1 1/2 HHCS PL GR8	14
135	9402970	TOOLBOX MTG. PAD	14
136	942480011	PLATE,SLOT-SS REAR WASHER TBOX	16
137	AWS-6821-A	HOSE ASSY-PRESSURE	10
138	FC41	FITTING-90DEG BLKHD ELB W/ NUT	8
139	HC1291	FITTING, 4MJ-4MB STR THR	16

09009128 BASIC UNIT ASSEMBLY 1140 RXP KNEEBOOM (cont'd)

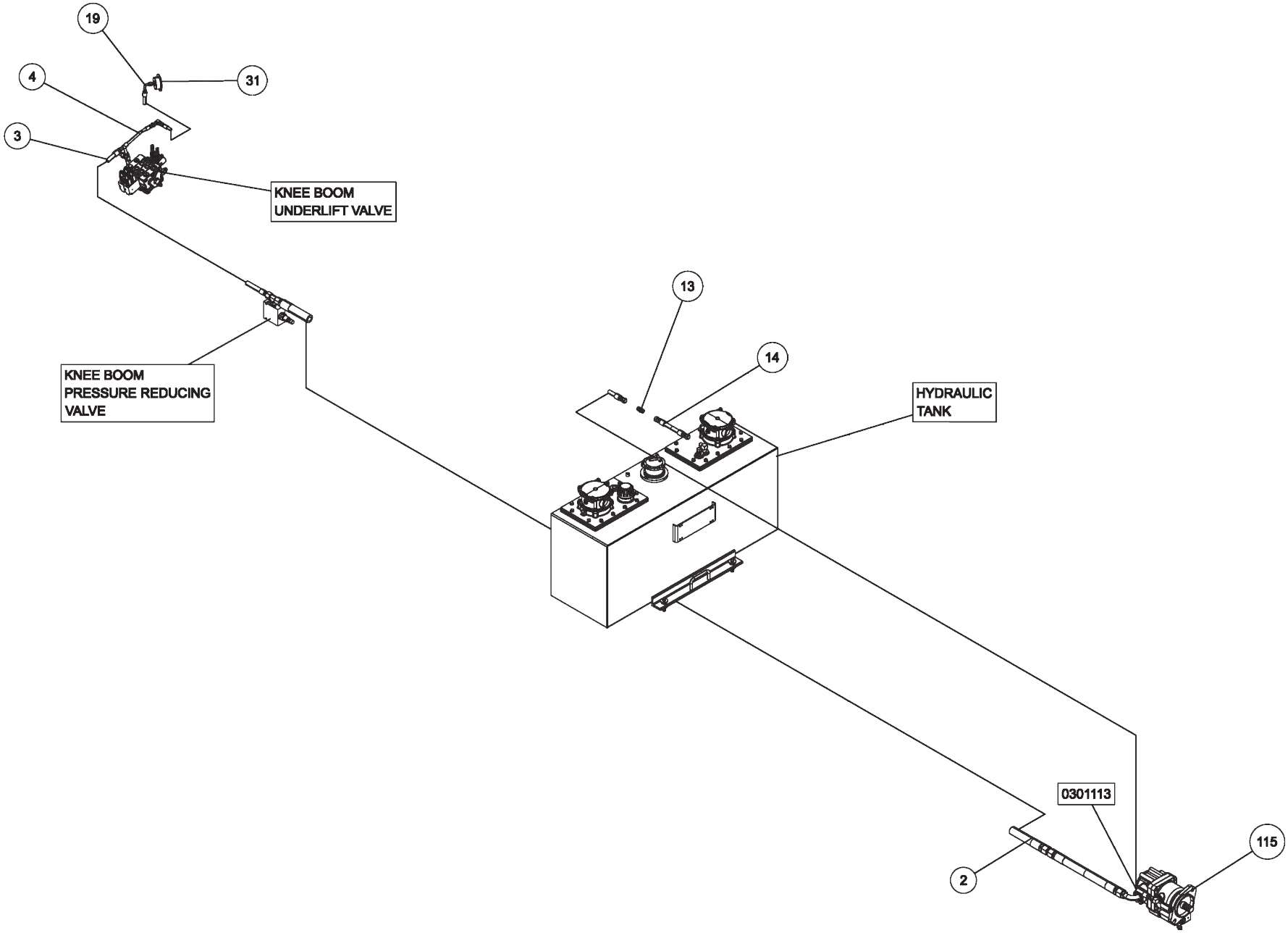

09009128 BASIC UNIT ASSEMBLY 1140 RXP KNEEBOOM (cont'd)

ITEM	PART NUMBER	DESCRIPTION	QTY
	09009128	BASIC UNIT ASSEMBLY 1140 RXP KB	
1	0300113	GREASE FITTING, 1/4-28 STR	1
2	03003419	HOSE, HYD 132" LG	1
3	03003420	HOSE, HYD 60" LG	1
4	03003421	HOSE, HYD 18"LG	3
5	03003424	HOSE, HYD 138"	1
6	03003425	HOSE, HYD 90" LG	4
7	03003426	HOSE, HYD 45" LG	6
8	0300364	CLAMP-HOSE,0.875"-2.75" 50"LBS	2
9	0300434	FITTING, HOSE BARB, 2	1
10	0300558	HOSE, SUCTION 2"ID 100R4 (C4)	1
11	0300835	KNOB-BOOM (UP-DOWN)	1
12	0300837	KNOB-BOOM (IN-OUT)	1
13	0300865	FITTING, CONNECTOR 8MJ-8MJ	5
14	0301113	HOSE HYD, 82"	2
15	0301207	HOSE HYD, 72"	4
16	0301377	FITTING, TEE,3/8" JIC	1
17	0301388	ELBOW, 8MJ-8MB90	3
18	0301422	FITTING, 6MJ-6MJ SMALL	4
19	0301473	HOSE HYD, 18" LG	2
20	0301522	ADAPTER, 6MJ-6MB	1
21	0301529	HOSE HYD, 58	2
22	03015922	STAUFF CLAMP, 3/8 TWIN	4
23	03016142	TUBE, HYD ASSY SF TO O/R	4
24	0301695	HOSE HYD, 91"	1
25	0301837	INLINE ORIFICE	4
26	0301909	RECEPTACLE BOOT	1
27	0301946	FITTING, BLKHD CONNECT	3
28	0301948	HD 7 WAY TRAILER CONNECT	1
29	0301961	BALL VALVE 2	1
30	0302056	HOSE HYD, 183"	5
31	0302205	GAUGE, FLUSH MNTG-6000 PSI	2
32	0302312	HOSE HYD, 43" LG 12G2AT	1
33	0302367	PIPE NIPPLE - 2 X 4	1
34	0302372	HOSE HYD, 240" LG	4
35	0302508	FITTING, ELL 8MJ-8MB 90LL	3
36	0302534	FITTING, 45 DEG ELBOW	2
37	0302604	HOSE HYD, 44"	2
38	0302632	HOSE HYD, 40"	8
39	0302805	HOSE HYD, 10"	1
40	0302856	KNOB-TILT, 3/8-16 THREAD	1
41	0302881	HOSE HYD, 45"	1
42	0303170	HOSE, HYD. 75"	1
43	0303340	HOSE HYD, 50" LG	1
44	0303379	KNOB, SWING CW - CCW	1
45	0303380	KNOB-UNDERLIFT (IN-OUT)	1
46	0303381	KNOB - UNDERLIFT (UP-DN)	1

ITEM	PART NUMBER	DESCRIPTION	QTY
47	0303391	HOSE 8AT2(8FJX-8FJ90) 110"	3
48	0303538	FITT, ADAPTER -BRASS 8FP-6MP	1
49	0303539	QUICK DISCONNECT 3/8 FPT	1
50	0303950	FITTING 45DEG DOT BRASS	1
51	0304363	QUICK DISCONNECT 1/2 FPT	2
52	0306537	EMERGENCY SWITCH	2
53	0306540	ROTARY SELECT SWITCH OPERATOR	12
54	0306870	HOSE HYDR - 96"	4
55	0306921	PIPE PLUG, 2" SQ HD	1
56	0307061	WINCH-35K dp 2-SP N.DRUM W/TEN	3
57	0307452	HOSE, HYD 146" LG	4
58	0307472	HOSE, HYD ASSY 24" LG	1
59	0307604	KNOB, RED LONG - SK0700-07	5
60	0310314	HOSE ASSY - 42" LG	4
61	0310456	PUSH BUTTN OPER W/MTG(RED) N/C	2
62	0310581	hose assy- 96" 8 fjx-10fjx90	4
63	0310637	PLUG, HOLE	2
64	0311191	ROLLER, POLY, 4" X 5/8"	2
65	0311305	T-BOLT CLAMP 1 3/8 TO 1 9/16	4
66	0311355	HOBBS HOURMETER	1
67	0311417	HOSE, 196" 3/8 2 X STRAIGHT	2
68	0311426	HOSE ASSY, 80" 4FJX-4FJX45	16
69	0311755	WATER SEPARATOR-MONNIER	1
70	0313129	HOSE, 1 SUCTION 16C4	34
71	0400005	SCREW, 6-32X1/2 PRH SS	6
72	0400012	LKWASHER, #8 SS	8
73	0400021	SCREW, 8-32X1/2 PRH SS	12
74	04000381	SS BHSCS 1/4-20 X 1	15
75	0400062	SCREW, 1/4-20X3/4 THC	3
76	0400066	SCREW, 1/4-20X3/4 HHC GR5	8
77	0400288	SCREW, 3/4-10X2-1/2 HHC GR8	16
78	0400307	SCREW, 7/8-9X4 HHC GR8	16
79	0400369	NUT, 1/4 SPR J	11
80	0400431	NUT, 3/4-10 LOK GR8	16
81	0400437	NUT, 7/8-9 LOK GR8	16
82	0400452	LKWASHER, 1/4	8
83	0400454	WASHER, 1/4 SS	2
84	0400473	WASHER, 7/8 PL GR8	16
85	0400489	WASHER, 3/4 SAE GR8	32
86	0400491	LKWASHER, 1/2	20
87	0400492	USS FLAT WASHER, 1/2	2
88	0400497	WASHER, 1/2 GR8	6
89	0400498	WASHER, 1/2X2X0.125	14
90	0400554	PIN, 3/8X1 SPR	3
91	0400900	NUT, 1/2-13 LOK JAM	2
92	0402020	SCREW, 1/4-20X3/4 HHC SS	2
93	0402021	SCREW, 1/4-20X1 HHC SS	13

ITEM	PART NUMBER	DESCRIPTION	QTY
94	0402044	SCREW, 3/8-16X1-1/2 HHC SS	8
95	0402080	WASHER, #8 SS	8
96	0402094	NUT, HEX 6-32 SS	6
97	0402110	WASHER, 1/4 SS	17
98	0402111	LKWASHER, 1/4 SS	30
99	0402113	NUT, 1/4-20 LOK SS	2
100	0402114	NUT, 1/4-20 LOK REV SS	11
101	0402120	WASHER, 3/8 SS	8
102	0402123	NUT, 3/8-16 LOK SS	8
103	07005922	MOUNT-HYD GAUGE	1
104	0712230	BOSS, TURNTABLE LOCK	4
105	0722104	ANGLE - WINCH MOUNTING	4
106	0724651	COVER	2
107	08005607	WINCH MOUNT, 35K FRONT	2
108	08005608	WINCH MOUNT, 35K REAR	2
109	0806994	HOUSE LOCK INDICATOR WELDMENT	4
110	0810433	HHU CHAIN ROLLER BRACKET, LH	1
111	0810434	HHU CHAIN ROLLER BRACKET, RH	1
112	09000097	ILLUMINATED LEGEND ASSY-LT UPP	1
113	09000135	ILLUMINATED LEGEND ASSY-RT UPP	1
114	09002247	CONTROL ASSY, 11 HANDLE WV	1
115	09002910	PUMP KIT, 4K KNEE BOOM	1
116	09002949	ILLUM LEGEND LT 1150 KNEE	1
117	09004266	U/L BOOM ASSEMBLY (SHORT)	1
118	09009470	SUBFRAME ASSY, 1140 RXP KB 12V	1
119	0906532	SWIVEL - BOOM ASSEMBLY	1
120	0908418	KIT-MUDFLAP CENTURY ROTATOR	1
121	0910231	BOOM ASSEMBLY 1140 (3-STAGE)	1
122	0910232	WRECKER FRAME ASSEMBLY - 1140	1
123	0910411	KIT - REAR OUTRGR 4-STG LG BOS	1
124	0910838	BUA '10 ROT AL BODY W/ XP TRI	1
125	0910935	XBAR ASY HRDWR-XHD 5X5 CENTURY	1
126	0911237	ILLUM LEGEND ASSY RH LWR WLV	1
127	0911324	RH CTL STATION ASSY 5 WINCH WV	1
128	0911804	AIR REGULATOR-GAUGE ASSEMBLY	4
129	24773017	HOSE ASSEMBLY 140"LG	2
130	24773018	HOSE ASSEMBLY 140"LG	2
131	9010520	FITTING-ELBOW 1/4T-1/4NPT	5
132	9024041	SWITCH, ROCKER SPST RED 12V21A	22
133	9041402	1/2 NC X 1 1/4 HHCS PLT GR8	6
134	9041403	1/2 NC X 1 1/2 HHCS PL GR8	14
135	9402970	TOOLBOX MTG. PAD	14
136	942480011	PLATE,SLOT-SS REAR WASHER TBOX	16
137	AWS-6821-A	HOSE ASSY-PRESSURE	10
138	FC41	FITTING-90DEG BLKHD ELB W/ NUT	8
139	HC1291	FITTING, 4MJ-4MB STR THR	16

09009128 BASIC UNIT ASSEMBLY 1140 RXP KNEEBOOM (cont'd)

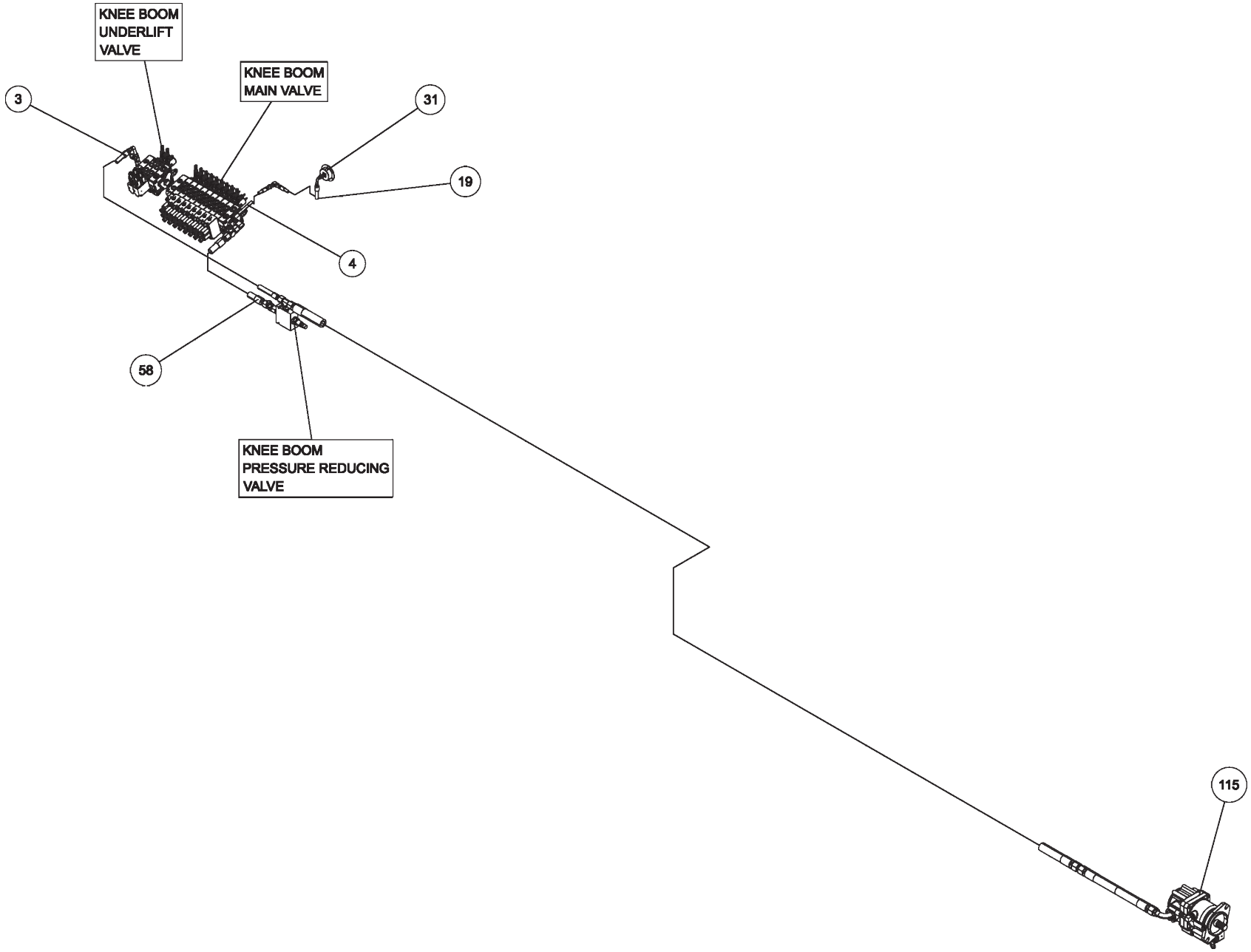

09009128 BASIC UNIT ASSEMBLY 1140 RXP KNEEBOOM (cont'd)

ITEM	PART NUMBER	DESCRIPTION	QTY
	09009128	BASIC UNIT ASSEMBLY 1140 RXP KB	
1	0300113	GREASE FITTING, 1/4-28 STR	1
2	03003419	HOSE, HYD 132" LG	1
3	03003420	HOSE, HYD 60" LG	1
4	03003421	HOSE, HYD 18"LG	3
5	03003424	HOSE, HYD 138"	1
6	03003425	HOSE, HYD 90" LG	4
7	03003426	HOSE, HYD 45" LG	6
8	0300364	CLAMP-HOSE,0.875"-2.75" 50"LBS	2
9	0300434	FITTING, HOSE BARB, 2	1
10	0300558	HOSE, SUCTION 2"ID 100R4 (C4)	1
11	0300835	KNOB-BOOM (UP-DOWN)	1
12	0300837	KNOB-BOOM (IN-OUT)	1
13	0300865	FITTING, CONNECTOR 8MJ-8MJ	5
14	0301113	HOSE HYD, 82"	2
15	0301207	HOSE HYD, 72"	4
16	0301377	FITTING, TEE,3/8" JIC	1
17	0301388	ELBOW, 8MJ-8MB90	3
18	0301422	FITTING, 6MJ-6MJ SMALL	4
19	0301473	HOSE HYD, 18" LG	2
20	0301522	ADAPTER, 6MJ-6MB	1
21	0301529	HOSE HYD, 58	2
22	03015922	STAUFF CLAMP, 3/8 TWIN	4
23	03016142	TUBE, HYD ASSY SF TO O/R	4
24	0301695	HOSE HYD, 91"	1
25	0301837	INLINE ORIFICE	4
26	0301909	RECEPTACLE BOOT	1
27	0301946	FITTING, BLKHD CONNECT	3
28	0301948	HD 7 WAY TRAILER CONNECT	1
29	0301961	BALL VALVE 2	1
30	0302056	HOSE HYD, 183"	5
31	0302205	GAUGE, FLUSH MNTG-6000 PSI	2
32	0302312	HOSE HYD, 43" LG 12G2AT	1
33	0302367	PIPE NIPPLE - 2 X 4	1
34	0302372	HOSE HYD, 240" LG	4
35	0302508	FITTING, ELL 8MJ-8MB 90LL	3
36	0302534	FITTING, 45 DEG ELBOW	2
37	0302604	HOSE HYD, 44"	2
38	0302632	HOSE HYD, 40"	8
39	0302805	HOSE HYD, 10"	1
40	0302856	KNOB-TILT, 3/8-16 THREAD	1
41	0302881	HOSE HYD, 45"	1
42	0303170	HOSE, HYD. 75"	1
43	0303340	HOSE HYD, 50" LG	1
44	0303379	KNOB, SWING CW - CCW	1
45	0303380	KNOB-UNDERLIFT (IN-OUT)	1
46	0303381	KNOB - UNDERLIFT (UP-DN)	1

ITEM	PART NUMBER	DESCRIPTION	QTY
47	0303391	HOSE 8AT2(8FJX-8FJ90) 110"	3
48	0303538	FITT, ADAPTER -BRASS 8FP-6MP	1
49	0303539	QUICK DISCONNECT 3/8 FPT	1
50	0303950	FITTING 45DEG DOT BRASS	1
51	0304363	QUICK DISCONNECT 1/2 FPT	2
52	0306537	EMERGENCY SWITCH	2
53	0306540	ROTARY SELECT SWITCH OPERATOR	12
54	0306870	HOSE HYDR - 96"	4
55	0306921	PIPE PLUG, 2" SQ HD	1
56	0307061	WINCH-35K dp 2-SP N.DRUM W/TEN	3
57	0307452	HOSE, HYD 146" LG	4
58	0307472	HOSE, HYD ASSY 24" LG	1
59	0307604	KNOB, RED LONG - SK0700-07	5
60	0310314	HOSE ASSY - 42" LG	4
61	0310456	PUSH BUTTN OPER W/MTG(RED) N/C	2
62	0310581	hose assy- 96" 8 fjx-10fjx90	4
63	0310637	PLUG, HOLE	2
64	0311191	ROLLER, POLY, 4" X 5/8"	2
65	0311305	T-BOLT CLAMP 1 3/8 TO 1 9/16	4
66	0311355	HOBBS HOURMETER	1
67	0311417	HOSE, 196" 3/8 2 X STRAIGHT	2
68	0311426	HOSE ASSY, 80" 4FJX-4FJX45	16
69	0311755	WATER SEPARATOR-MONNIER	1
70	0313129	HOSE, 1 SUCTION 16C4	34
71	0400005	SCREW, 6-32X1/2 PRH SS	6
72	0400012	LKWASHER, #8 SS	8
73	0400021	SCREW, 8-32X1/2 PRH SS	12
74	04000381	SS BHSCS 1/4-20 X 1	15
75	0400062	SCREW, 1/4-20X3/4 THC	3
76	0400066	SCREW, 1/4-20X3/4 HHC GR5	8
77	0400288	SCREW, 3/4-10X2-1/2 HHC GR8	16
78	0400307	SCREW, 7/8-9X4 HHC GR8	16
79	0400369	NUT, 1/4 SPR J	11
80	0400431	NUT, 3/4-10 LOK GR8	16
81	0400437	NUT, 7/8-9 LOK GR8	16
82	0400452	LKWASHER, 1/4	8
83	0400454	WASHER, 1/4 SS	2
84	0400473	WASHER, 7/8 PL GR8	16
85	0400489	WASHER, 3/4 SAE GR8	32
86	0400491	LKWASHER, 1/2	20
87	0400492	USS FLAT WASHER, 1/2	2
88	0400497	WASHER, 1/2 GR8	6
89	0400498	WASHER, 1/2X2X0.125	14
90	0400554	PIN, 3/8X1 SPR	3
91	0400900	NUT, 1/2-13 LOK JAM	2
92	0402020	SCREW, 1/4-20X3/4 HHC SS	2
93	0402021	SCREW, 1/4-20X1 HHC SS	13

ITEM	PART NUMBER	DESCRIPTION	QTY
94	0402044	SCREW, 3/8-16X1-1/2 HHC SS	8
95	0402080	WASHER, #8 SS	8
96	0402094	NUT, HEX 6-32 SS	6
97	0402110	WASHER, 1/4 SS	17
98	0402111	LKWASHER, 1/4 SS	30
99	0402113	NUT, 1/4-20 LOK SS	2
100	0402114	NUT, 1/4-20 LOK REV SS	11
101	0402120	WASHER, 3/8 SS	8
102	0402123	NUT, 3/8-16 LOK SS	8
103	07005922	MOUNT-HYD GAUGE	1
104	0712230	BOSS, TURNTABLE LOCK	4
105	0722104	ANGLE - WINCH MOUNTING	4
106	0724651	COVER	2
107	08005607	WINCH MOUNT, 35K FRONT	2
108	08005608	WINCH MOUNT, 35K REAR	2
109	0806994	HOUSE LOCK INDICATOR WELDMENT	4
110	0810433	HHU CHAIN ROLLER BRACKET, LH	1
111	0810434	HHU CHAIN ROLLER BRACKET, RH	1
112	09000097	ILLUMINATED LEGEND ASSY-LT UPP	1
113	09000135	ILLUMINATED LEGEND ASSY-RT UPP	1
114	09002247	CONTROL ASSY, 11 HANDLE WV	1
115	09002910	PUMP KIT, 4K KNEE BOOM	1
116	09002949	ILLUM LEGEND LT 1150 KNEE	1
117	09004266	U/L BOOM ASSEMBLY (SHORT)	1
118	09009470	SUBFRAME ASSY, 1140 RXP KB 12V	1
119	0906532	SWIVEL - BOOM ASSEMBLY	1
120	0908418	KIT-MUDFLAP CENTURY ROTATOR	1
121	0910231	BOOM ASSEMBLY 1140 (3-STAGE)	1
122	0910232	WRECKER FRAME ASSEMBLY - 1140	1
123	0910411	KIT - REAR OUTRGR 4-STG LG BOS	1
124	0910838	BUA '10 ROT AL BODY W/ XP TRI	1
125	0910935	XBAR ASY HRDWR-XHD 5X5 CENTURY	1
126	0911237	ILLUM LEGEND ASSY RH LWR WLV	1
127	0911324	RH CTL STATION ASSY 5 WINCH WV	1
128	0911804	AIR REGULATOR-GAUGE ASSEMBLY	4
129	24773017	HOSE ASSEMBLY 140"LG	2
130	24773018	HOSE ASSEMBLY 140"LG	2
131	9010520	FITTING-ELBOW 1/4T-1/4NPT	5
132	9024041	SWITCH, ROCKER SPST RED 12V21A	22
133	9041402	1/2 NC X 1 1/4 HHCS PLT GR8	6
134	9041403	1/2 NC X 1 1/2 HHCS PL GR8	14
135	9402970	TOOLBOX MTG. PAD	14
136	942480011	PLATE,SLOT-SS REAR WASHER TBOX	16
137	AWS-6821-A	HOSE ASSY-PRESSURE	10
138	FC41	FITTING-90DEG BLKHD ELB W/ NUT	8
139	HC1291	FITTING, 4MJ-4MB STR THR	16

09009128 BASIC UNIT ASSEMBLY 1140 RXP KNEEBOOM (cont'd)

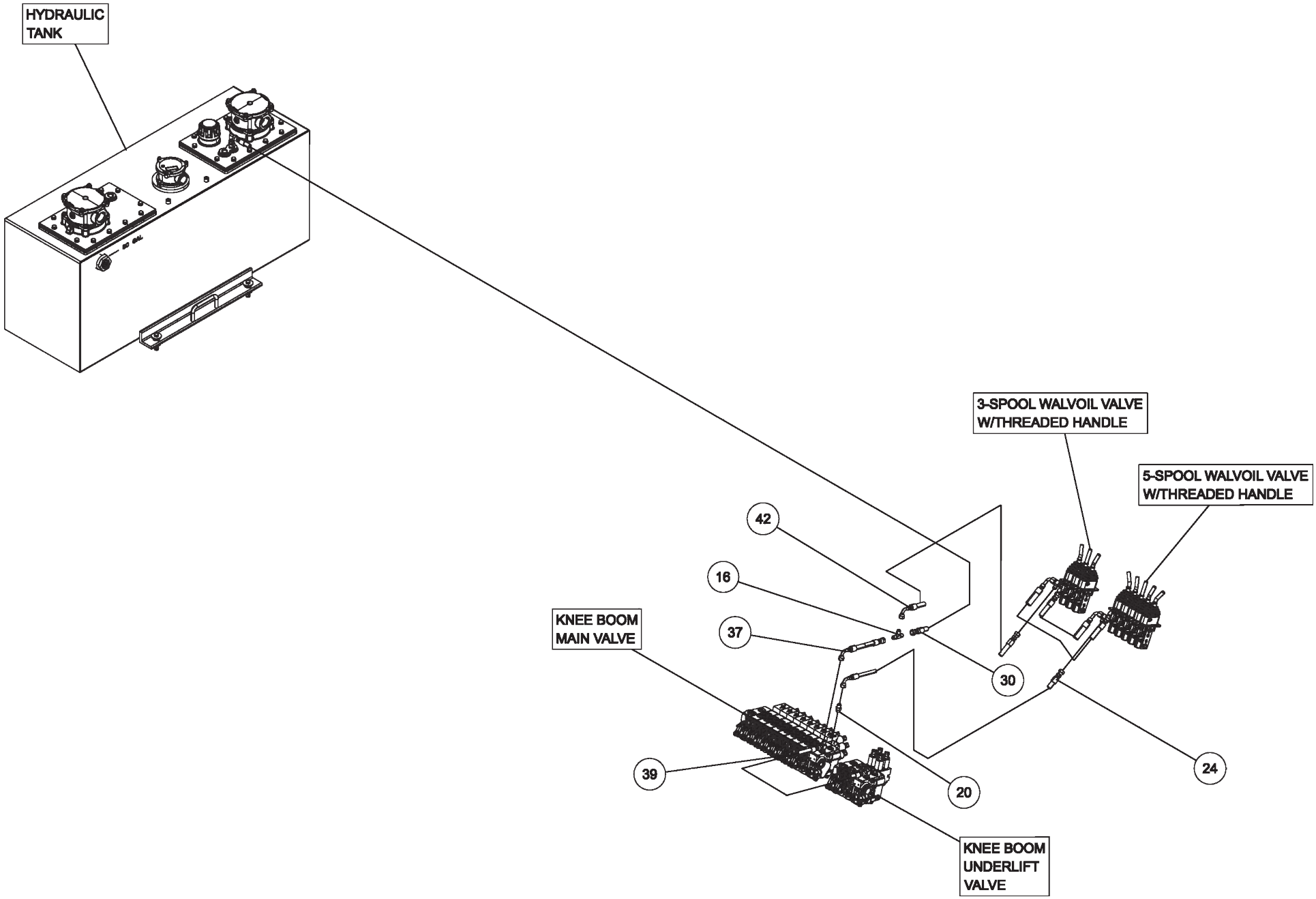

09009128 BASIC UNIT ASSEMBLY 1140 RXP KNEEBOOM (cont'd)

ITEM	PART NUMBER	DESCRIPTION	QTY
	09009128	BASIC UNIT ASSEMBLY 1140 RXP KB	
1	0300113	GREASE FITTING, 1/4-28 STR	1
2	03003419	HOSE, HYD 132" LG	1
3	03003420	HOSE, HYD 60" LG	1
4	03003421	HOSE, HYD 18"LG	3
5	03003424	HOSE, HYD 138"	1
6	03003425	HOSE, HYD 90" LG	4
7	03003426	HOSE, HYD 45" LG	6
8	0300364	CLAMP-HOSE,0.875"-2.75" 50"LBS	2
9	0300434	FITTING, HOSE BARB, 2	1
10	0300558	HOSE, SUCTION 2"ID 100R4 (C4)	1
11	0300835	KNOB-BOOM (UP-DOWN)	1
12	0300837	KNOB-BOOM (IN-OUT)	1
13	0300865	FITTING, CONNECTOR 8MJ-8MJ	5
14	0301113	HOSE HYD, 82"	2
15	0301207	HOSE HYD, 72"	4
16	0301377	FITTING, TEE,3/8" JIC	1
17	0301388	ELBOW, 8MJ-8MB90	3
18	0301422	FITTING, 6MJ-6MJ SMALL	4
19	0301473	HOSE HYD, 18" LG	2
20	0301522	ADAPTER, 6MJ-6MB	1
21	0301529	HOSE HYD, 58	2
22	03015922	STAUFF CLAMP, 3/8 TWIN	4
23	03016142	TUBE, HYD ASSY SF TO O/R	4
24	0301695	HOSE HYD, 91"	1
25	0301837	INLINE ORIFICE	4
26	0301909	RECEPTACLE BOOT	1
27	0301946	FITTING, BLKHD CONNECT	3
28	0301948	HD 7 WAY TRAILER CONNECT	1
29	0301961	BALL VALVE 2	1
30	0302056	HOSE HYD, 183"	5
31	0302205	GAUGE, FLUSH MNTG-6000 PSI	2
32	0302312	HOSE HYD, 43" LG 12G2AT	1
33	0302367	PIPE NIPPLE - 2 X 4	1
34	0302372	HOSE HYD, 240" LG	4
35	0302508	FITTING, ELL 8MJ-8MB 90LL	3
36	0302534	FITTING, 45 DEG ELBOW	2
37	0302604	HOSE HYD, 44"	2
38	0302632	HOSE HYD, 40"	8
39	0302805	HOSE HYD, 10"	1
40	0302856	KNOB-TILT, 3/8-16 THREAD	1
41	0302881	HOSE HYD, 45"	1
42	0303170	HOSE, HYD. 75"	1
43	0303340	HOSE HYD, 50" LG	1
44	0303379	KNOB, SWING CW - CCW	1
45	0303380	KNOB-UNDERLIFT (IN-OUT)	1
46	0303381	KNOB - UNDERLIFT (UP-DN)	1

ITEM	PART NUMBER	DESCRIPTION	QTY
47	0303391	HOSE 8AT2(8FJX-8FJ90) 110"	3
48	0303538	FITT, ADAPTER -BRASS 8FP-6MP	1
49	0303539	QUICK DISCONNECT 3/8 FPT	1
50	0303950	FITTING 45DEG DOT BRASS	1
51	0304363	QUICK DISCONNECT 1/2 FPT	2
52	0306537	EMERGENCY SWITCH	2
53	0306540	ROTARY SELECT SWITCH OPERATOR	12
54	0306870	HOSE HYDR - 96"	4
55	0306921	PIPE PLUG, 2" SQ HD	1
56	0307061	WINCH-35K dp 2-SP N.DRUM W/TEN	3
57	0307452	HOSE, HYD 146" LG	4
58	0307472	HOSE, HYD ASSY 24" LG	1
59	0307604	KNOB, RED LONG - SK0700-07	5
60	0310314	HOSE ASSY - 42" LG	4
61	0310456	PUSH BUTTN OPER W/MTG(RED) N/C	2
62	0310581	hose assy- 96" 8 fjx-10fjx90	4
63	0310637	PLUG, HOLE	2
64	0311191	ROLLER, POLY, 4" X 5/8"	2
65	0311305	T-BOLT CLAMP 1 3/8 TO 1 9/16	4
66	0311355	HOBBS HOURMETER	1
67	0311417	HOSE, 196" 3/8 2 X STRAIGHT	2
68	0311426	HOSE ASSY, 80" 4FJX-4FJX45	16
69	0311755	WATER SEPARATOR-MONNIER	1
70	0313129	HOSE, 1 SUCTION 16C4	34
71	0400005	SCREW, 6-32X1/2 PRH SS	6
72	0400012	LKWASHER, #8 SS	8
73	0400021	SCREW, 8-32X1/2 PRH SS	12
74	04000381	SS BHSCS 1/4-20 X 1	15
75	0400062	SCREW, 1/4-20X3/4 THC	3
76	0400066	SCREW, 1/4-20X3/4 HHC GR5	8
77	0400288	SCREW, 3/4-10X2-1/2 HHC GR8	16
78	0400307	SCREW, 7/8-9X4 HHC GR8	16
79	0400369	NUT, 1/4 SPR J	11
80	0400431	NUT, 3/4-10 LOK GR8	16
81	0400437	NUT, 7/8-9 LOK GR8	16
82	0400452	LKWASHER, 1/4	8
83	0400454	WASHER, 1/4 SS	2
84	0400473	WASHER, 7/8 PL GR8	16
85	0400489	WASHER, 3/4 SAE GR8	32
86	0400491	LKWASHER, 1/2	20
87	0400492	USS FLAT WASHER, 1/2	2
88	0400497	WASHER, 1/2 GR8	6
89	0400498	WASHER, 1/2X2X0.125	14
90	0400554	PIN, 3/8X1 SPR	3
91	0400900	NUT, 1/2-13 LOK JAM	2
92	0402020	SCREW, 1/4-20X3/4 HHC SS	2
93	0402021	SCREW, 1/4-20X1 HHC SS	13

ITEM	PART NUMBER	DESCRIPTION	QTY
94	0402044	SCREW, 3/8-16X1-1/2 HHC SS	8
95	0402080	WASHER, #8 SS	8
96	0402094	NUT, HEX 6-32 SS	6
97	0402110	WASHER, 1/4 SS	17
98	0402111	LKWASHER, 1/4 SS	30
99	0402113	NUT, 1/4-20 LOK SS	2
100	0402114	NUT, 1/4-20 LOK REV SS	11
101	0402120	WASHER, 3/8 SS	8
102	0402123	NUT, 3/8-16 LOK SS	8
103	07005922	MOUNT-HYD GAUGE	1
104	0712230	BOSS, TURNTABLE LOCK	4
105	0722104	ANGLE - WINCH MOUNTING	4
106	0724651	COVER	2
107	08005607	WINCH MOUNT, 35K FRONT	2
108	08005608	WINCH MOUNT, 35K REAR	2
109	0806994	HOUSE LOCK INDICATOR WELDMENT	4
110	0810433	HHU CHAIN ROLLER BRACKET, LH	1
111	0810434	HHU CHAIN ROLLER BRACKET, RH	1
112	09000097	ILLUMINATED LEGEND ASSY-LT UPP	1
113	09000135	ILLUMINATED LEGEND ASSY-RT UPP	1
114	09002247	CONTROL ASSY, 11 HANDLE WV	1
115	09002910	PUMP KIT, 4K KNEE BOOM	1
116	09002949	ILLUM LEGEND LT 1150 KNEE	1
117	09004266	U/L BOOM ASSEMBLY (SHORT)	1
118	09009470	SUBFRAME ASSY, 1140 RXP KB 12V	1
119	0906532	SWIVEL - BOOM ASSEMBLY	1
120	0908418	KIT-MUDFLAP CENTURY ROTATOR	1
121	0910231	BOOM ASSEMBLY 1140 (3-STAGE)	1
122	0910232	WRECKER FRAME ASSEMBLY - 1140	1
123	0910411	KIT - REAR OUTRGR 4-STG LG BOS	1
124	0910838	BUA '10 ROT AL BODY W/ XP TRI	1
125	0910935	XBAR ASY HRDWR-XHD 5X5 CENTURY	1
126	0911237	ILLUM LEGEND ASSY RH LWR WLV	1
127	0911324	RH CTL STATION ASSY 5 WINCH WV	1
128	0911804	AIR REGULATOR-GAUGE ASSEMBLY	4
129	24773017	HOSE ASSEMBLY 140"LG	2
130	24773018	HOSE ASSEMBLY 140"LG	2
131	9010520	FITTING-ELBOW 1/4T-1/4NPT	5
132	9024041	SWITCH, ROCKER SPST RED 12V21A	22
133	9041402	1/2 NC X 1 1/4 HHCS PLT GR8	6
134	9041403	1/2 NC X 1 1/2 HHCS PL GR8	14
135	9402970	TOOLBOX MTG. PAD	14
136	942480011	PLATE,SLOT-SS REAR WASHER TBOX	16
137	AWS-6821-A	HOSE ASSY-PRESSURE	10
138	FC41	FITTING-90DEG BLKHD ELB W/ NUT	8
139	HC1291	FITTING, 4MJ-4MB STR THR	16

09000097 ILLUMINATED LEGEND ASSEMBLY LH UPPER

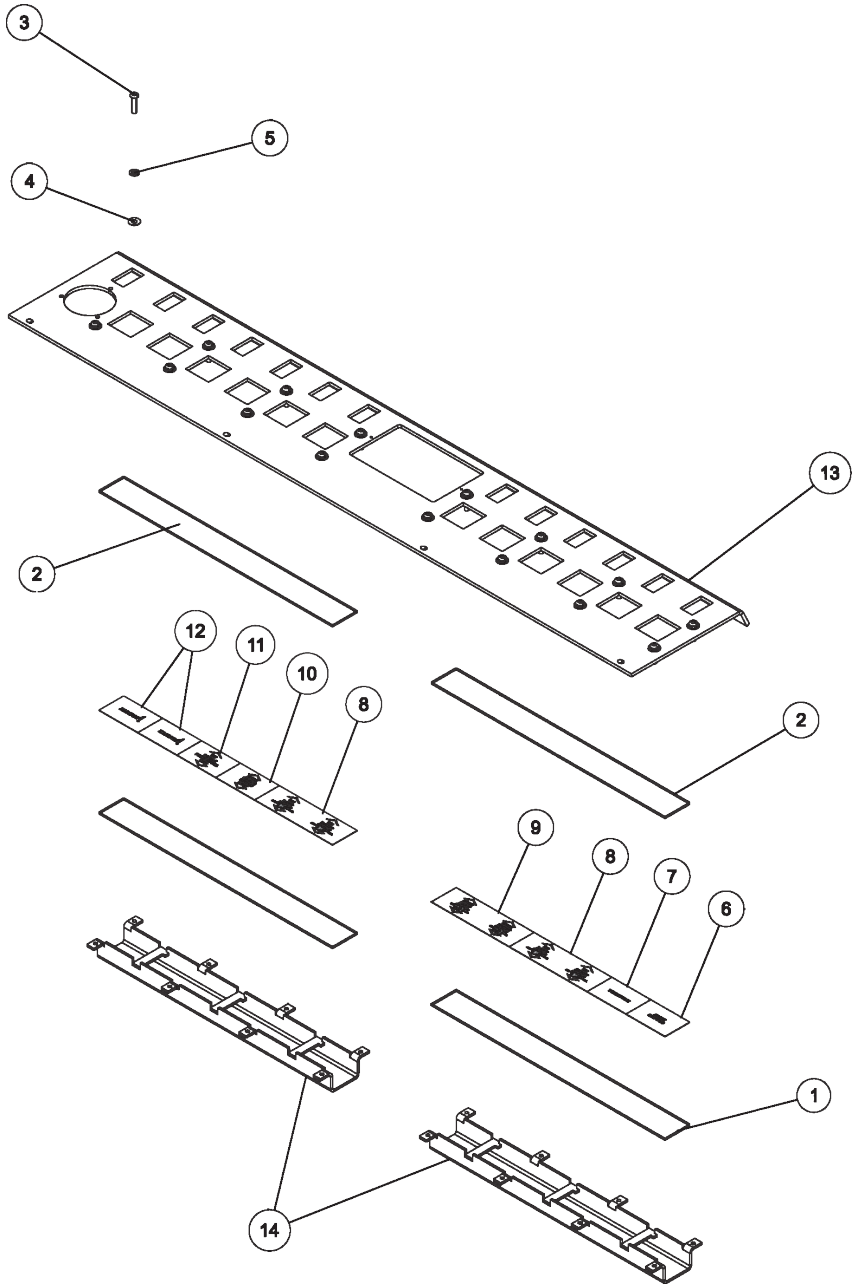

09000097 ILLUMINATED LEGEND ASSEMBLY LH UPPER (cont'd)

ITEM	PART NUMBER	DESCRIPTION	QTY
--	09000097	ILLUMINATED LEGEND ASSEMBLY - LT UPPER	
1	0310004	PLASTIC, DUST COVER-CLEAR 16.5	2
2	0310005	PLASTIC, COLOR LENS - RED 16.5	2
3	0310040	FLEXLITE LED STRIP	2
4	0310041	FLEXLITE LED POWER WIRE	2
5	04000381	SS BHSCS 1/4-20 X 1	16
6	0400454	WASHER, 1/4 SS	16
7	0402111	LKWASHER, 1/4 SS	16
8	0501587	LEGEND, PANEL-BOOM	1
9	0501588	LEGEND, PANEL-THROTTLE	1
10	0501589	LEGEND, PANEL-CABLE ON/OFF	2
11	0501590	LEGEND, PANEL-CABLE HIGH/LOW	1
12	0501591	LEGEND, PANEL-CABLE SPEED	1
13	0501593	LEGEND, PANEL-CABLE FREE SPOOL	1
14	0501597	LEGEND, PANEL-BLANK MILLER LGO	2
15	0727012	APANEL, LH 5 WINCH ROT	1
16	0807057	CHANNEL,LIGHT&LEGEND WLMT 16.5	2

09000135 ILLUMINATED LEGEND ASSEMBLY RH UPPER

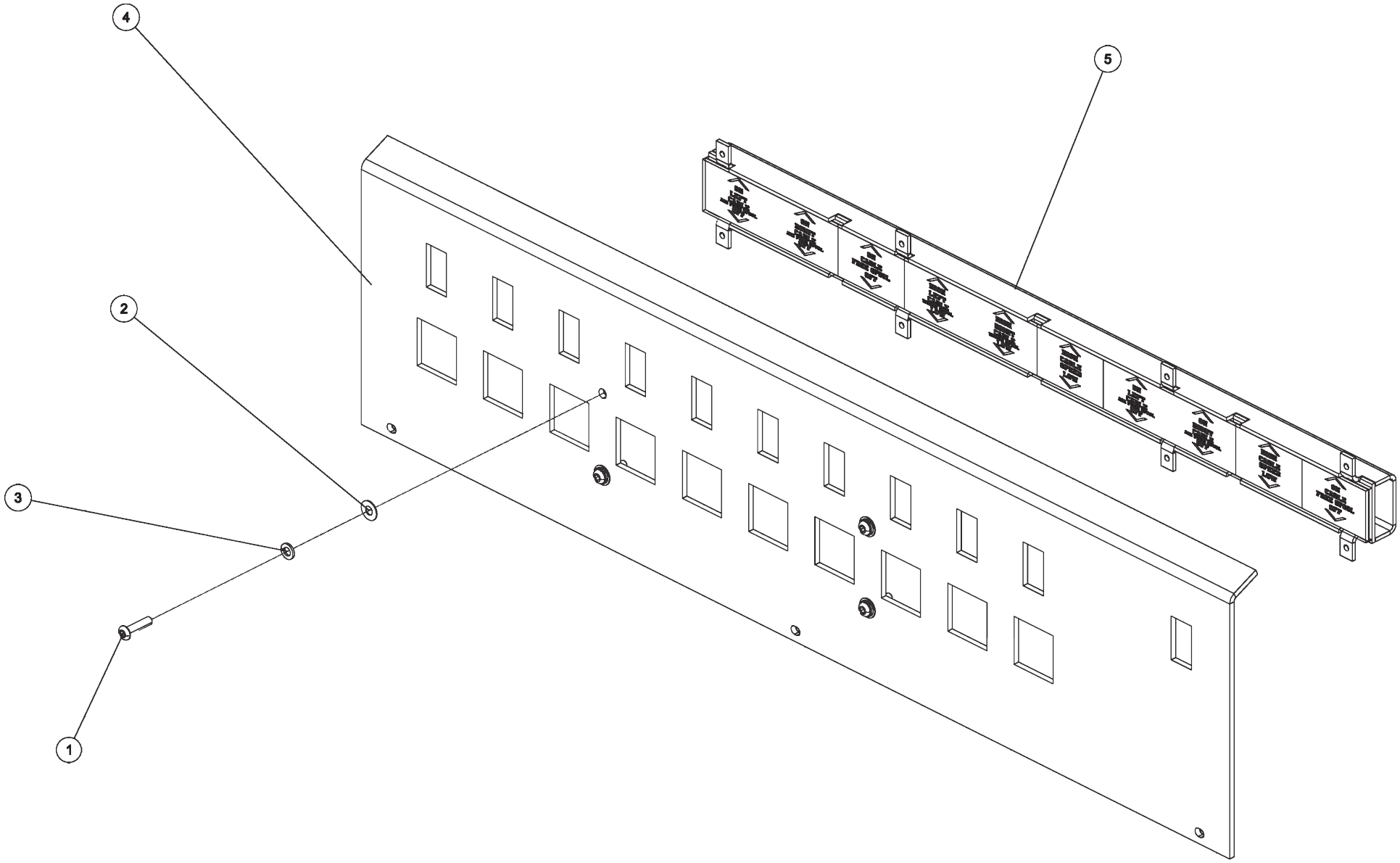

09000135 ILLUMINATED LEGEND ASSEMBLY RH UPPER (cont'd)

ITEM	PART NUMBER	DESCRIPTION	QTY
	09000135	ILLUMINATED LEGEND ASSEMBLY RH UPPER	
1	04000381	SS BHSCS 1/4-20 X 1	4
2	0400454	WASHER, 1/4 SS	4
3	0402111	LKWASHER, 1/4 SS	4
4	0727010	APANEL, 10 SWITCH	1
5	09000139	ILLUMINATED LEGEND ASSY 27.5	1

09000139 ILLUMINATED LEGEND ASSEMBLY 27.5

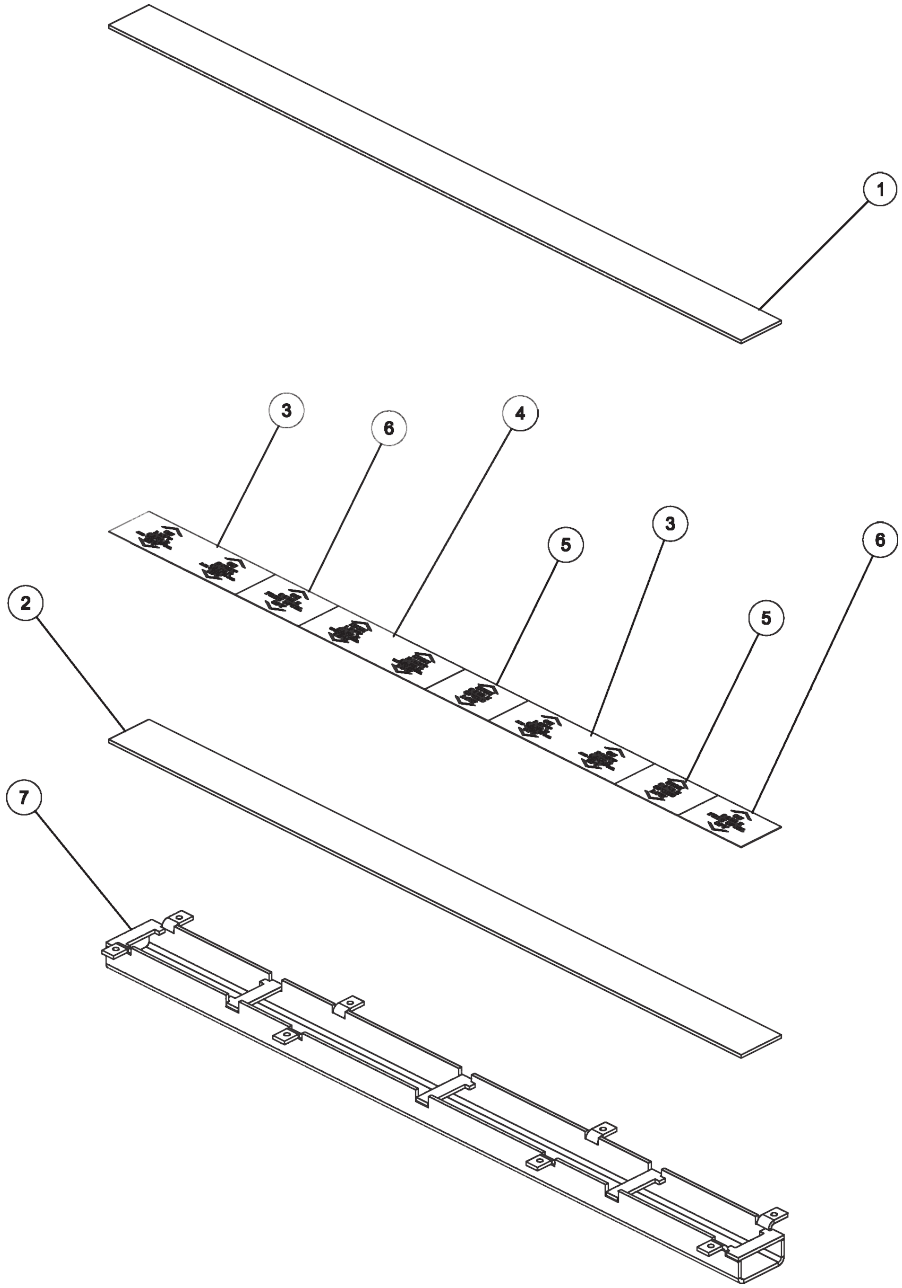

09000139 ILLUMINATED LEGEND ASSEMBLY 27.5 (cont'd)

ITEM	PART NUMBER	DESCRIPTION	QTY
	09000139	ILLUMINATE LEGEND ASSEMBLY 27.5	
1	0307971	PLASTIC, DUST COVER-CLEAR 27.5	1
2	0307975	PLASTIC, COLOR LENS - RED 27.5	1
3	0310040	FLEXLITE LED STRIP	1
4	0310041	FLEXLITE LED POWER WIRE	1
5	0310042	FLEXLITE LED JUMPER WIRE	1
6	0501589	LEGEND, PANEL-CABLE ON/OFF	2
7	0501590	LEGEND, PANEL-CABLE HIGH/LOW	1
8	0501591	LEGEND, PANEL-CABLE SPEED	2
9	0501593	LEGEND, PANEL-CABLE FREE SPOOL	2
10	0807046	CHANNEL,LIGHT&LEGEND WLMT 27.5	1

09002247 CONTROL ASSEMBLY 11 HANDLE WV

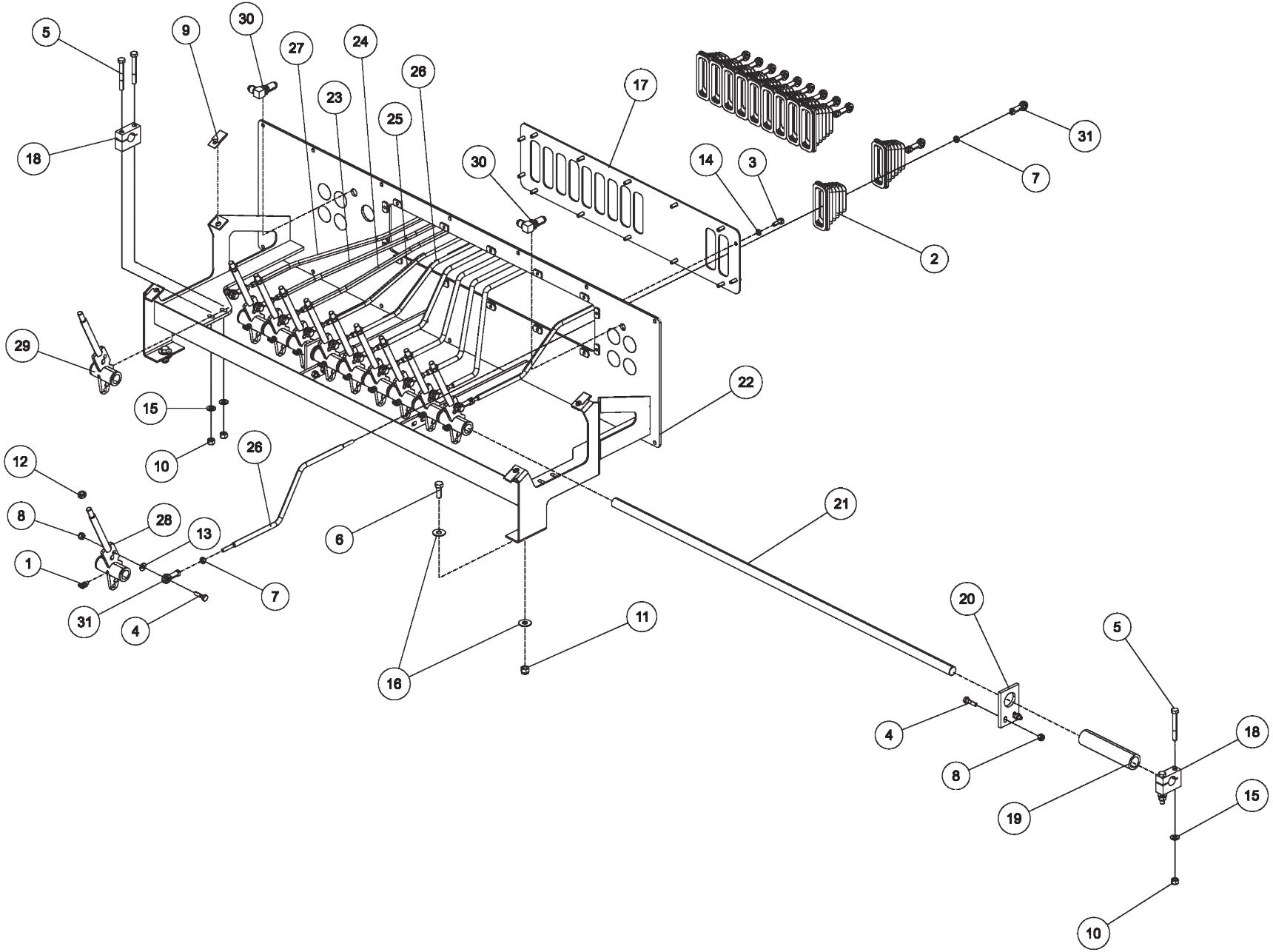

09002247 CONTROL ASSEMBLY 11 HANDLE WV

ITEM	PART NUMBER	DESCRIPTION	QTY
	09002247	CONTROL ASSEMBLY 11 HANDLE WV	
1	0302726	GREASE FITTING, 1/4-28 45	11
2	0310148	BOOT, CONTROL HANDLE	11
3	0400066	SCREW, 1/4-20X3/4 HHC GR5	14
4	0400070	SCREW, 1/4-20X1 HHC GR5	15
5	0400107	SCREW, 5/16-18X2-1/2 HHC GR5	4
6	0400126	SCREW, 3/8-16X1 HHC GR5	2
7	0400365	NUT, 1/4-28 HEX	22
8	0400367	NUT, 1/4-20 LOK	15
9	0400379	NUT, 5/16-18 SPR J	4
10	0400382	NUT, 5/16-18 LOK	4
11	0400392	NUT, 3/8-16 LOK	2
12	0400393	NUT, 3/8-16 JAM	11
13	0400451	WASHER, 1/4	11
14	0400452	LKWASHER, 1/4	14
15	0400463	WASHER, 5/16	4
16	0400480	WASHER, 3/8	4
17	07002691	PLATE, CONTROL ASSEMBLY BACK	1
18	0711235	CLAMP, SHAFT CONTROL BOX	2
19	0717206	TUBE - 1.25 OD SPACER	1
20	0723378	PLATE-PIN SUPPORT	2
21	0724669	PIN CONTROL HANDLE	1
22	08002068	CONTROL FRAME WELDMENT	1
23	0807980	CONTROL ROD WELDMENT	2
24	0807981	CONTROL ROD WELDMENT	2
25	0807982	CONTROL ROD WELDMENT	2
26	0807983	CONTROL ROD WELDMENT	4
27	0807984	CONTROL ROD WELDMENT	1
28	0907441	CONTROL HANDLE ASSY - SHORT	10
29	0911240	CTL HANDLE ASSY-SPL	1
30	FC41	FITTING-90DEG BLKHD ELB W/ NUT	2
31	HD0900	BEARING, ROD END, 1/4-28	22

09002910 PUMP KIT, 4K KNEEBOOM

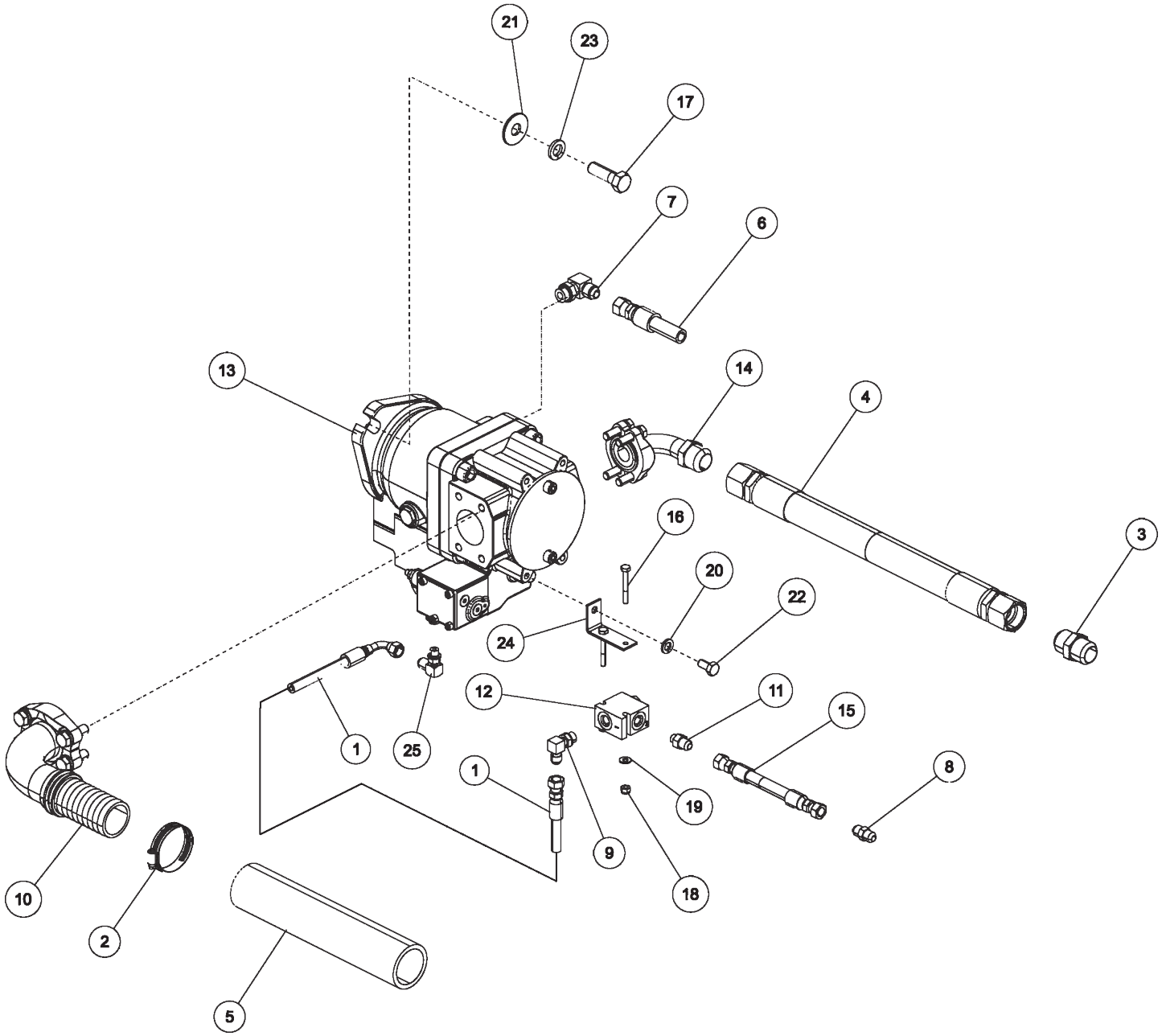

09002910 PUMP KIT, 4K KNEEBOOM (cont'd)

ITEM	PART NUMBER	DESCRIPTION	QTY
	09002910	PUMP KIT 4K KNEEBOOM	
1	03003421	HOSE, HYD 18"LG	1
2	0300364	CLAMP-HOSE,0.875"-2.75" 50"LBS	1
3	0300431	CONNECTOR, 16MJ-16MJ	1
4	03005247	HOSE, HYD 132" LG	1
5	0300558	HOSE, SUCTION 2"ID 100R4 (C4)	15
6	0301113	HOSE HYD, 82"	1
7	0301388	ELBOW, 8MJ-8MB90	1
8	0301422	FITTING, 6MJ-6MJ SMALL	1
9	0301620	FITTING, HYD. 6MJ - 6MB90	1
10	0301637	FITTING, FL - FLANGE	1
11	0302695	ADAPTER, 6MJ-4MB	1
12	0307311	FILTER SCREEN - INLINE	1
13	0310199	PUMP, PISTON - KAWASAKI	1
14	0310200	HYD FITTING,ELL 1 W/FLANGE KIT	1
15	0311418	HOSE, 90" 3/8 2 X STRAIGHT	1
16	0400078	SCREW, 1/4-20X2 HHC GR5	2
17	0400260	SCREW, 5/8-11X2 HHC GR5	2
18	0400367	NUT, 1/4-20 LOK	2
19	0400451	WASHER, 1/4	2
20	0400487	LKWASHER, 7/16	1
21	0400506	WASHER, 5/8	2
22	0400508	LKWASHER, 5/8	2
23	0400710	SCREW, M10-1.5X20 HHC 10.9	1
24	0730323	BRACKET, FILTER SCREEN	1
25	IC209	FTG-90DEG ADPTR 1/4 ORB	1

09002949 ILLUMINATED LEGEND ASSEMBLY LH

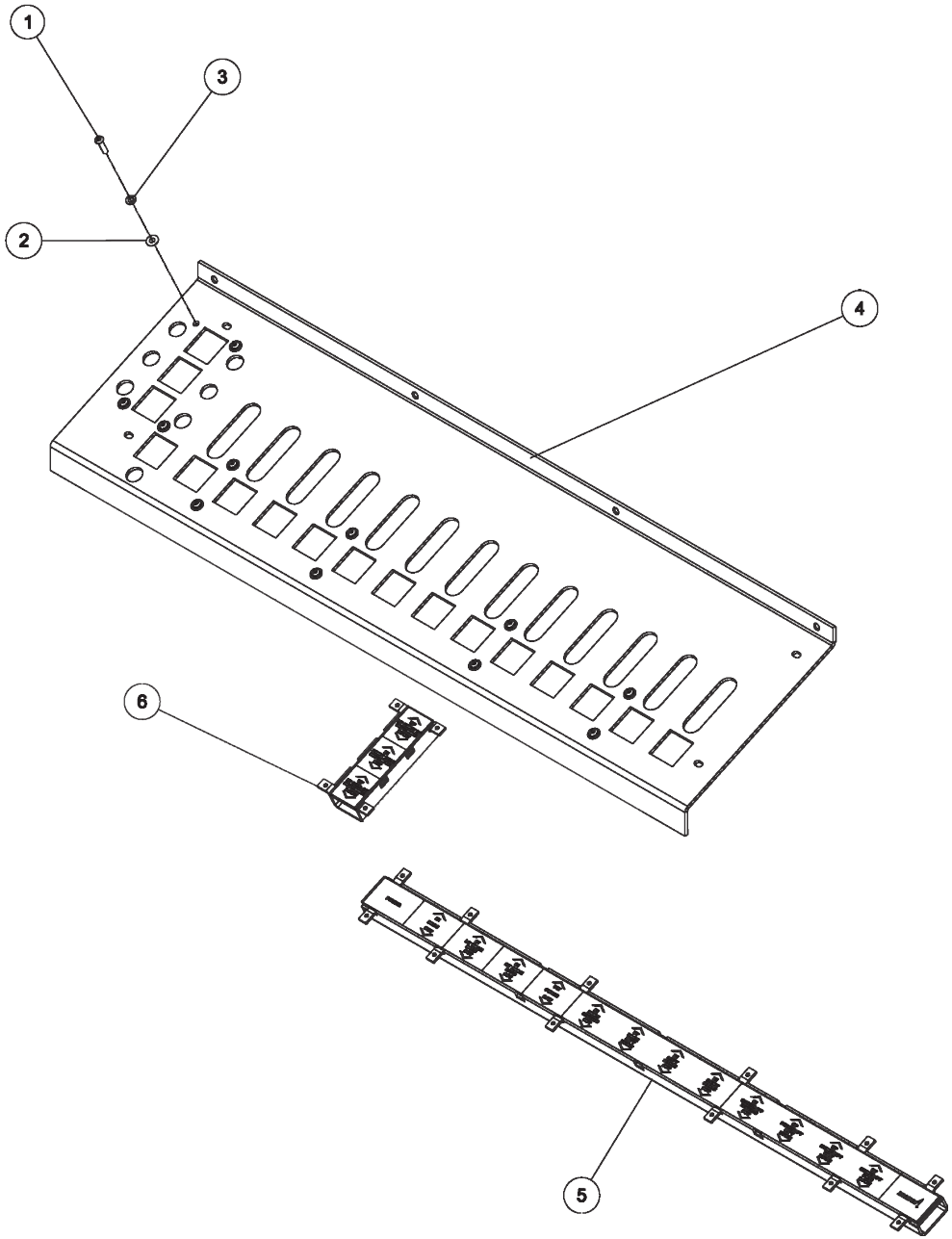

09002949 ILLUMINATED LEGEND ASSEMBLY LH (cont'd)

ITEM	PART NUMBER	DESCRIPTION	QTY
	09002949	ILLUMINATED LEGEND LH	
1	04000381	SS BHSCS 1/4-20 X 1	12
2	0400454	WASHER, 1/4 SS	12
3	0402111	LKWASHER, 1/4 SS	12
4	0727008	APANEL, CONTROL 13 HANDLE	1
5	09002950	ILLUM LEGEND ASSY LT 1150 KNEE	1
6	0908745	ILLUMINATED LEGEND ASSY 6	1

09002950 ILLUMINATED LEGEND ASSEMBLY LH

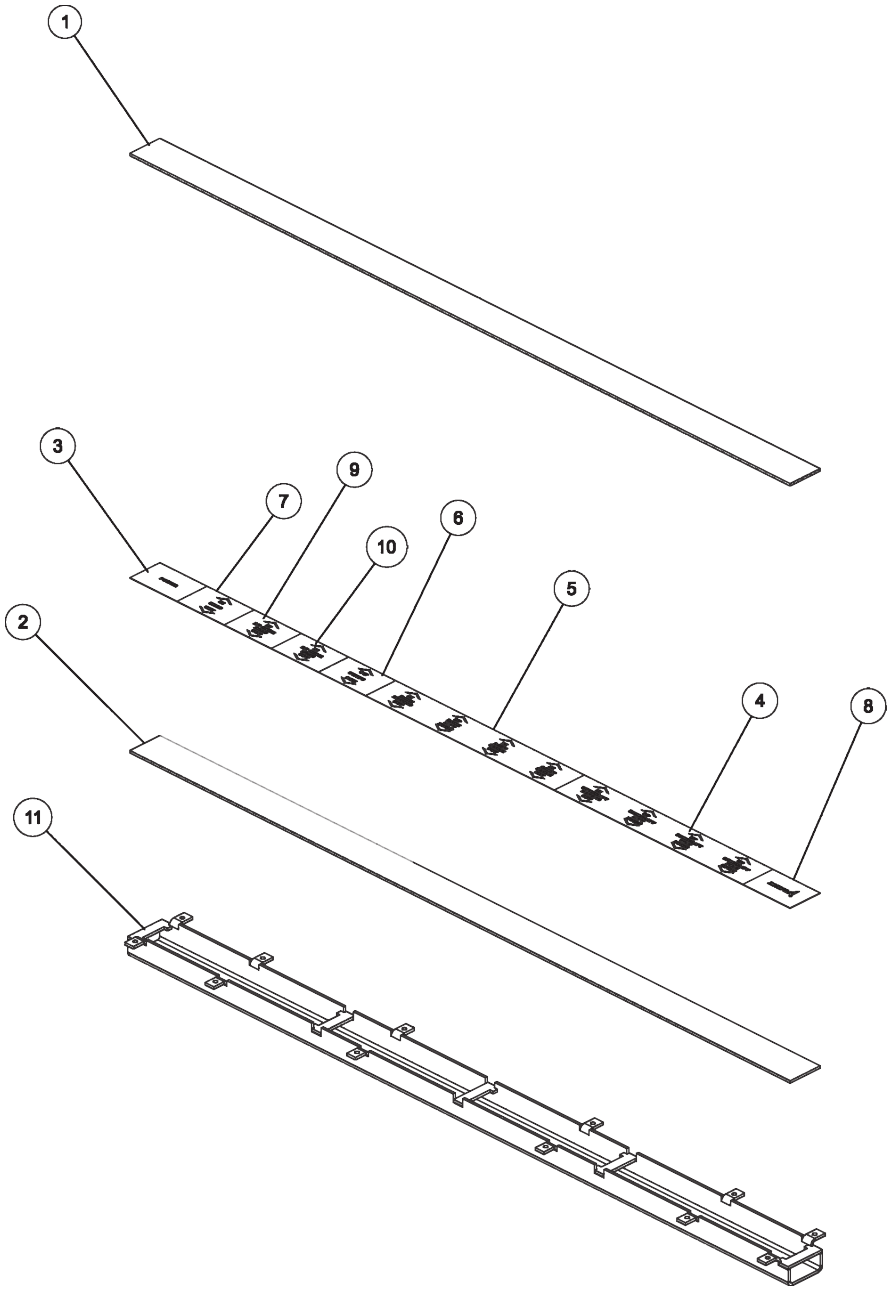

09002950 ILLUMINATED LEGEND ASSEMBLY LH (cont'd)

ITEM	PART NUMBER	DESCRIPTION	QTY
	09002950	ILLUMINATED LEGEND ASSY LH	
1	0310040	FLEXLITE LED STRIP	1
2	0310041	FLEXLITE LED POWER WIRE	1
3	0310042	FLEXLITE LED JUMPER WIRE	2
4	0310171	PLASTIC, COLOR LENS - CLEAR	1
5	0310172	PLASTIC, DUST COVER-RED	1
6	0310184	JUMPER WIRE, 15 FLEXLIGHT	1
7	0501582	LEGEND, PANEL-POWER	1
8	0501583	LEGEND, PANEL-UNDERLIFT	1
9	0501584	LEGEND, PANEL-BOOM/CABLE	1
10	0501585	LEGEND, PANEL-SWING	1
11	0501586	LEGEND, PANEL-DRAG	1
12	0501597	LEGEND, PANEL-BLANK MILLER LGO	1
13	0501621	LEGEND,PANEL- LT BOOM DRAG	1
14	0501622	LEGEND,PANEL- RT BOOM DRAG	1
15	0807202	CHANNEL,LIGHT&LEGEND WLMT 38.5	1

0908745 ILLUMINATED LEGEND ASSEMBLY

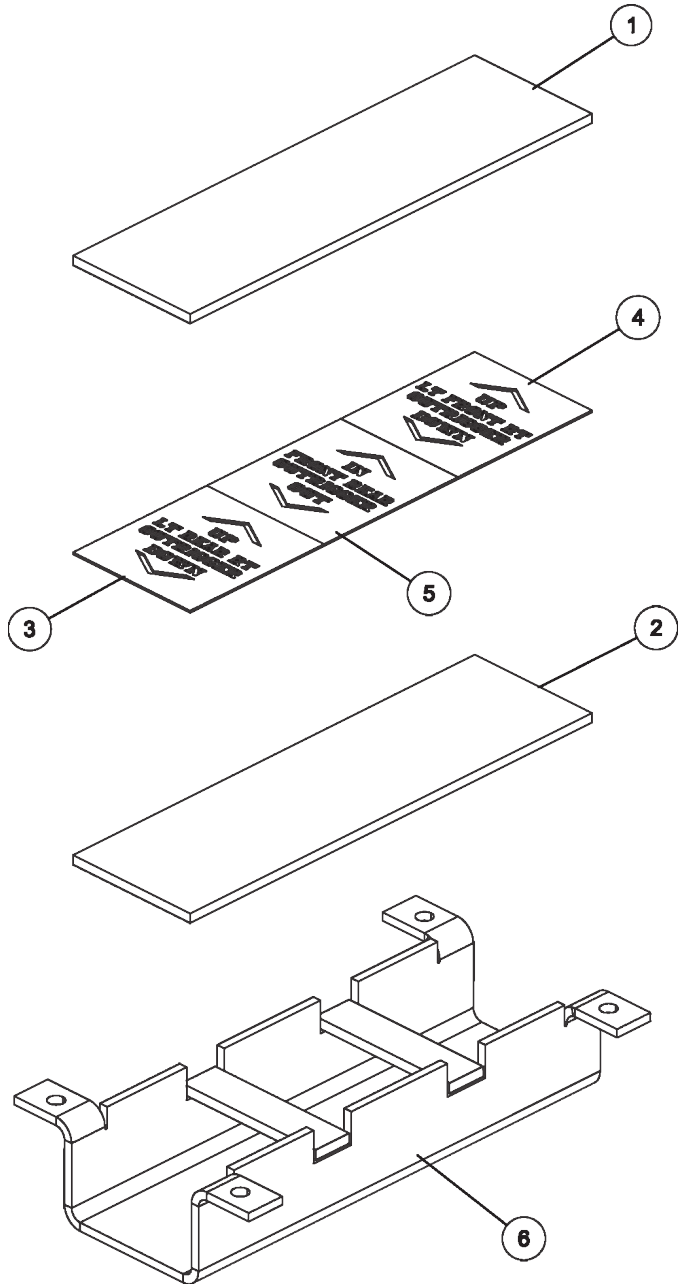

0908745 ILLUMINATED LEGEND ASSEMBLY (cont'd)

ITEM	PART NUMBER	DESCRIPTION	QTY
	0908745	ILLUMINATED LEGEND ASSY	
1	0307972	PLASTIC, DUST COVER-CLEAR 6	1
2	0307976	PLASTIC, COLOR LENS - RED 6	1
3	0501579	LEGEND, PANEL-REAR OUTRIGGER	1
4	0501580	LEGEND, PANEL-FRONT OUTRIGGER	1
5	0501581	LEGEND, PANEL-FRT/REAR OUTRIG	1
6	0807047	CHANNEL, LIGHT&LEGENDS WLMT 6	1

09004266 UNDERLIFT BOOM ASSEMBLY

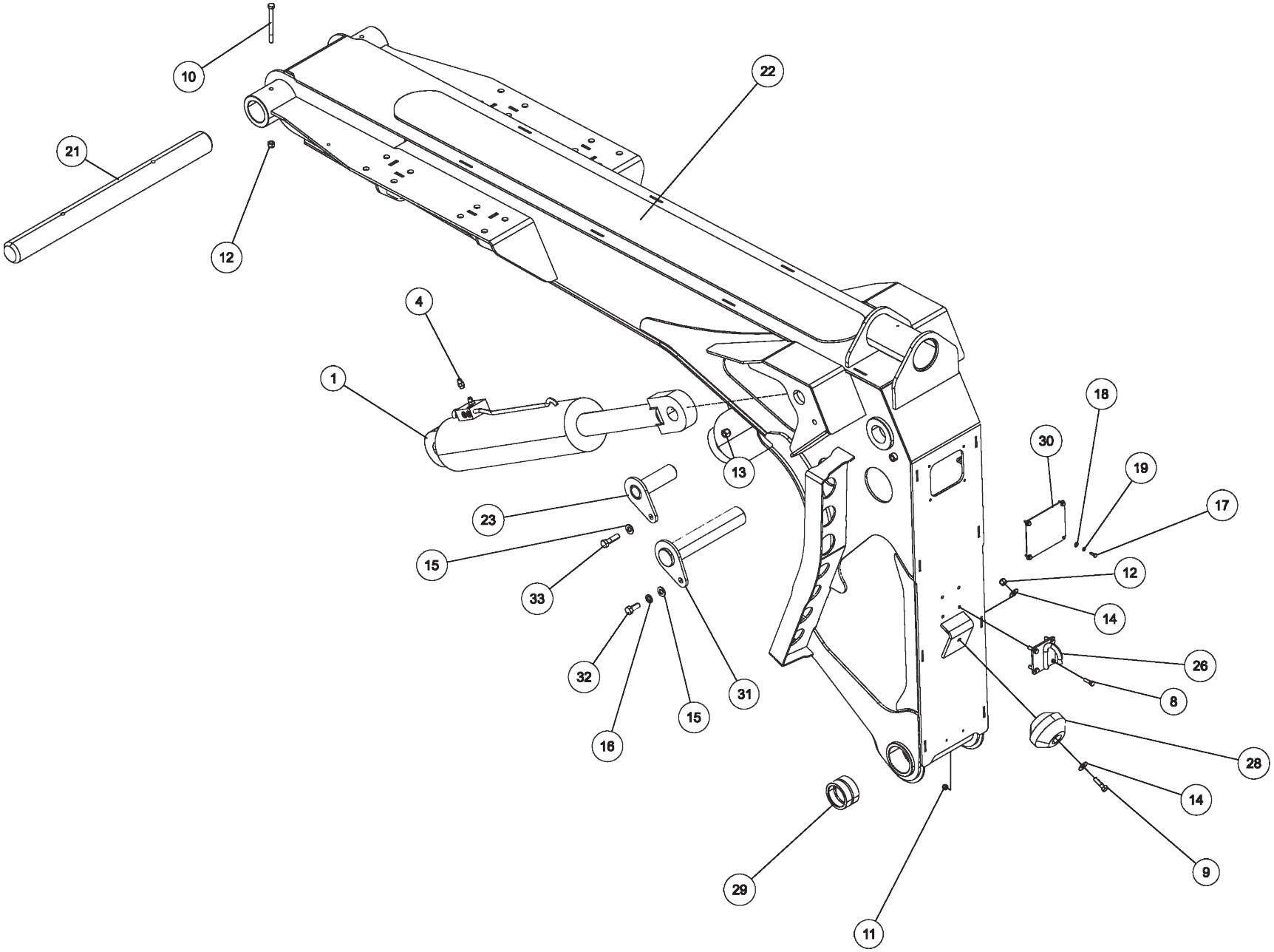

09004266 UNDERLIFT BOOM ASSEMBLY (cont'd)

ITEM	PART NUMBER	DESCRIPTION	QTY
	09004266	UNDERLIFT BOOM ASSEMBLY	
1	03001432	CYLINDER, U/L LIFT	2
2	03001433	CYLINDER, U/L TILT	1
3	0301470	FITTING, 90ELB 6MJ-8MB90	2
4	0301522	ADAPTER, 6MJ-6MB	4
5	0310480	FITTING - BULKHEAD -6 UNION	4
6	0311418	HOSE, 90" 3/8 2 X STRAIGHT	2
7	04000401	SCREW, 5/8-11X2-3/4 HHC GR8	1
8	0400122	SCREW, 3/8-16X1-1/4 HHC GR5	4
9	0400211	SCREW, 1/2-13X1-3/4 HHC GR5	1
10	0400220	SCREW, 1/2-13X5-1/2 HHC GR5	2
11	0400392	NUT, 3/8-16 LOK	4
12	0400408	NUT, 1/2-13 LOK	3
13	0400426	NUT, 5/8-11 LOK GR8	3
14	0400492	USS FLAT WASHER, 1/2	2
15	0400503	WASHER, 5/8 GR8	5
16	0400508	LKWASHER, 5/8	2
17	0402020	SCREW, 1/4-20X3/4 HHC SS	4
18	0402110	WASHER, 1/4 SS	4
19	0402111	LKWASHER, 1/4 SS	4
20	0410410	GREASE FITTING, M6-1.0 STR SS	2
21	0715953	PIN, BOOM PIVOT	1
22	08001034	U/L BOOM WELDMENT	1
23	08001289	U/L LIFT CYLINDER PIN WELDMENT	2
24	08001290	U/L PIVOT PIN WELDMENT	1
25	08002548	PIN WELDMENT, LOWER TILT CYL	1
26	0810517	HOOK PLATE WLDMT	1
27	09003929	U/L HORIZONTAL BOOM ASSY	1
28	26113028	TIMBREN SPRING - A103B-75	1
29	26687448	BUSHING 3 ID X 3 75 OD X 2 31	2
30	26687481	PLATE, COVER - TILT CYL ACCESS	1
31	26688067	PIN WELD'T - UPPER TILT CYL	1
32	9043950	5/8 NC X 1 1/2 HHCS PL GR 8	2
33	9044409	SCREW, 5/8-11X2-1/4 HHC GR8 YZ	2

09004266 UNDERLIFT BOOM ASSEMBLY

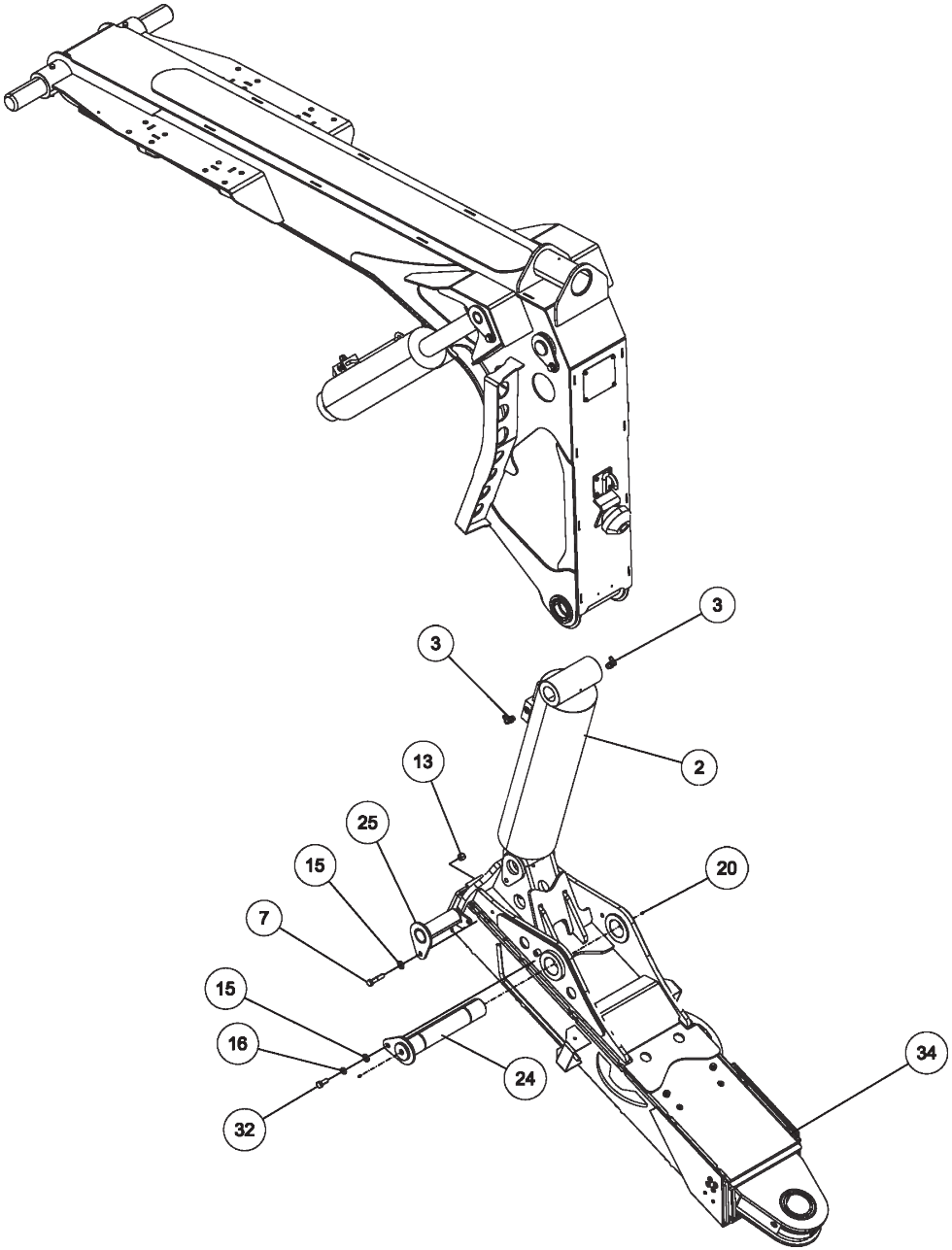

09004266 UNDERLIFT BOOM ASSEMBLY (cont'd)

ITEM	PART NUMBER	DESCRIPTION	QTY
	09004266	UNDERLIFT BOOM ASSEMBLY	
1	03001432	CYLINDER, U/L LIFT	2
2	03001433	CYLINDER, U/L TILT	1
3	0301470	FITTING, 90ELB 6MJ-8MB90	2
4	0301522	ADAPTER, 6MJ-6MB	4
5	0310480	FITTING - BULKHEAD -6 UNION	4
6	0311418	HOSE, 90" 3/8 2 X STRAIGHT	2
7	04000401	SCREW, 5/8-11X2-3/4 HHC GR8	1
8	0400122	SCREW, 3/8-16X1-1/4 HHC GR5	4
9	0400211	SCREW, 1/2-13X1-3/4 HHC GR5	1
10	0400220	SCREW, 1/2-13X5-1/2 HHC GR5	2
11	0400392	NUT, 3/8-16 LOK	4
12	0400408	NUT, 1/2-13 LOK	3
13	0400426	NUT, 5/8-11 LOK GR8	3
14	0400492	USS FLAT WASHER, 1/2	2
15	0400503	WASHER, 5/8 GR8	5
16	0400508	LKWASHER, 5/8	2
17	0402020	SCREW, 1/4-20X3/4 HHC SS	4
18	0402110	WASHER, 1/4 SS	4
19	0402111	LKWASHER, 1/4 SS	4
20	0410410	GREASE FITTING, M6-1.0 STR SS	2
21	0715953	PIN, BOOM PIVOT	1
22	08001034	U/L BOOM WELDMENT	1
23	08001289	U/L LIFT CYLINDER PIN WELDMENT	2
24	08001290	U/L PIVOT PIN WELDMENT	1
25	08002548	PIN WELDMENT, LOWER TILT CYL	1
26	0810517	HOOK PLATE WLDMT	1
27	09003929	U/L HORIZONTAL BOOM ASSY	1
28	26113028	TIMBREN SPRING - A103B-75	1
29	26687448	BUSHING 3 ID X 3 75 OD X 2 31	2
30	26687481	PLATE, COVER - TILT CYL ACCESS	1
31	26688067	PIN WELD'T - UPPER TILT CYL	1
32	9043950	5/8 NC X 1 1/2 HHCS PL GR 8	2
33	9044409	SCREW, 5/8-11X2-1/4 HHC GR8 YZ	2

09004266 UNDERLIFT BOOM ASSEMBLY

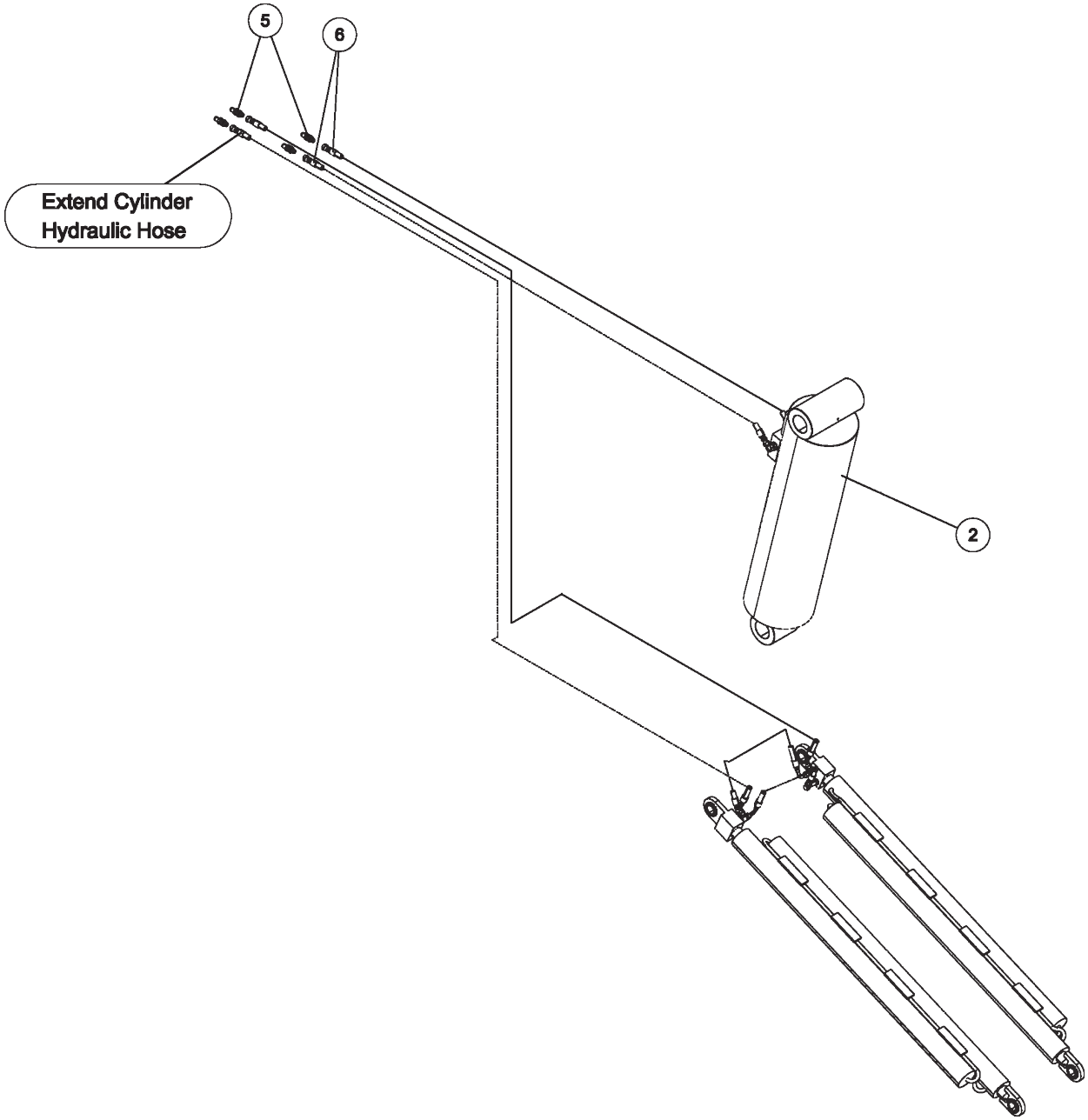

09004266 UNDERLIFT BOOM ASSEMBLY (cont'd)

ITEM	PART NUMBER	DESCRIPTION	QTY
	09004266	UNDERLIFT BOOM ASSEMBLY	
1	03001432	CYLINDER, U/L LIFT	2
2	03001433	CYLINDER, U/L TILT	1
3	0301470	FITTING, 90ELB 6MJ-8MB90	2
4	0301522	ADAPTER, 6MJ-6MB	4
5	0310480	FITTING - BULKHEAD -6 UNION	4
6	0311418	HOSE, 90" 3/8 2 X STRAIGHT	2
7	04000401	SCREW, 5/8-11X2-3/4 HHC GR8	1
8	0400122	SCREW, 3/8-16X1-1/4 HHC GR5	4
9	0400211	SCREW, 1/2-13X1-3/4 HHC GR5	1
10	0400220	SCREW, 1/2-13X5-1/2 HHC GR5	2
11	0400392	NUT, 3/8-16 LOK	4
12	0400408	NUT, 1/2-13 LOK	3
13	0400426	NUT, 5/8-11 LOK GR8	3
14	0400492	USS FLAT WASHER, 1/2	2
15	0400503	WASHER, 5/8 GR8	5
16	0400508	LKWASHER, 5/8	2
17	0402020	SCREW, 1/4-20X3/4 HHC SS	4
18	0402110	WASHER, 1/4 SS	4
19	0402111	LKWASHER, 1/4 SS	4
20	0410410	GREASE FITTING, M6-1.0 STR SS	2
21	0715953	PIN, BOOM PIVOT	1
22	08001034	U/L BOOM WELDMENT	1
23	08001289	U/L LIFT CYLINDER PIN WELDMENT	2
24	08001290	U/L PIVOT PIN WELDMENT	1
25	08002548	PIN WELDMENT, LOWER TILT CYL	1
26	0810517	HOOK PLATE WLDMT	1
27	09003929	U/L HORIZONTAL BOOM ASSY	1
28	26113028	TIMBREN SPRING - A103B-75	1
29	26687448	BUSHING 3 ID X 3 75 OD X 2 31	2
30	26687481	PLATE, COVER - TILT CYL ACCESS	1
31	26688067	PIN WELD'T - UPPER TILT CYL	1
32	9043950	5/8 NC X 1 1/2 HHCS PL GR 8	2
33	9044409	SCREW, 5/8-11X2-1/4 HHC GR8 YZ	2

09003929 UNDERLIFT HORIZONTAL BOOM ASSEMBLY

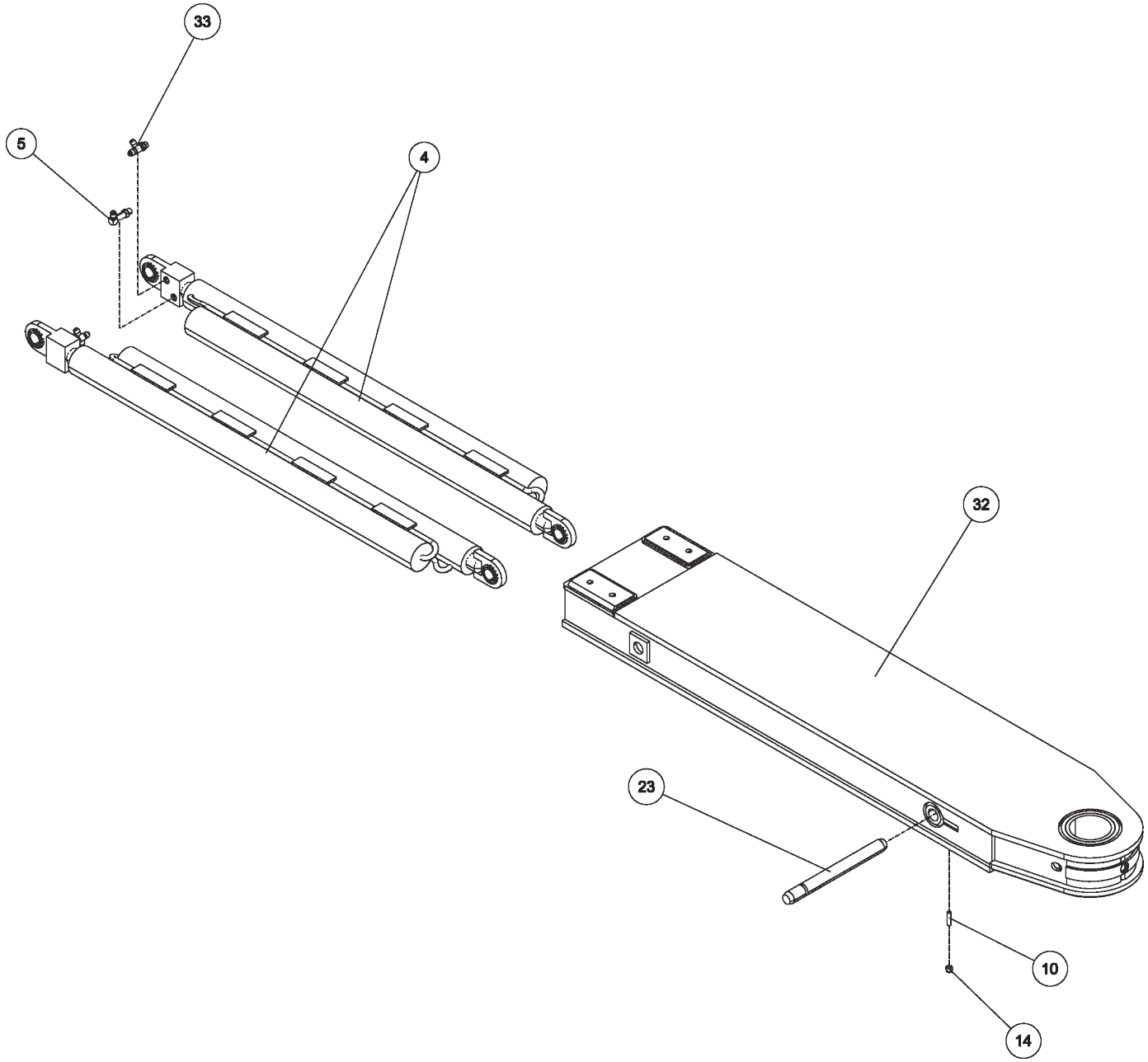

09003929 UNDERLIFT HORIZONTAL BOOM ASSEMBLY (cont'd)

ITEM	PART NUMBER	DESCRIPTION	QTY
	09003929	UNDERLIFT HORIZONTAL BOOM ASSY	
1	0300113	GREASE FITTING, 1/4-28 STR	4
2	03003427	HOSE, HYD 192" LG	2
3	0303968	HOSE HYD, 10" LG	2
4	0307425	CYL, HYD - U/L BOOM EXTEND	2
5	0307460	FITTING, HYD 6MJ-6MB90LL	2
6	0311442	WEAR PAD (15/16 x 1 x 4)	2
7	0400079	SCREW, 1/4-20X3/4 FHS GR5	8
8	0400086	SCREW, 1/4-20X1-1/4 FHS	4
9	0400118	SCREW, 5/16-18X3/4 HHC GR5	3
10	0400139	SET SCREW, 3/8-16X1-1/2 SOC	1
11	0400249	SCREW, 5/8-11X1-1/4 SHC	2
12	0400344	SCREW, 1/2-13X3/4 FHS GR8	8
13	0400379	NUT, 5/16-18 SPR J	1
14	0400392	NUT, 3/8-16 LOK	1
15	0400463	WASHER, 5/16	3
16	0400464	LKWASHER, 5/16	3
17	0400594	SCREW, 1/4-20X5/8 FHS	4
18	0400749	SCREW, 1/2-13X1-1/4 FHS	18
19	0400990	SET SCREW, 1/2-13X1/2 SOC	4
20	07004402	ANGLE, HOSE COVER	1
21	07004403	PLATE, HOSE COVER	1
22	0717869	PLATE, SPACER (BOLT-ON)	4
23	0717871	PIN, CYLINDER ROD	1
24	0717872	PIN, EXTEND CYLINDER BASE	1
25	0717873	PIN, SHEAR OUTER BOOM	2
26	0718087	PLATE - PAD SPACER	2
27	0718096	BLOCK, STOP	2
28	0724419	PLATE-PLUG RETAINER	2
29	08001288	EXTEND CYL BRACKET WELDMENT	1
30	08003427	U/L OUTER BOOM WELDMENT	1
31	0810106	2nd STAGE BOOM WLMT	1
32	0908282	INNER BOOM ASSY	1
33	9012594	FITT,HYD RUN TEE, 6MJx6MBx6MJ	2
34	930150003	TOP PADS	6
35	GH246	SPLIT RUBBER GROMMET	2

09003929 UNDERLIFT HORIZONTAL BOOM ASSEMBLY (cont'd)

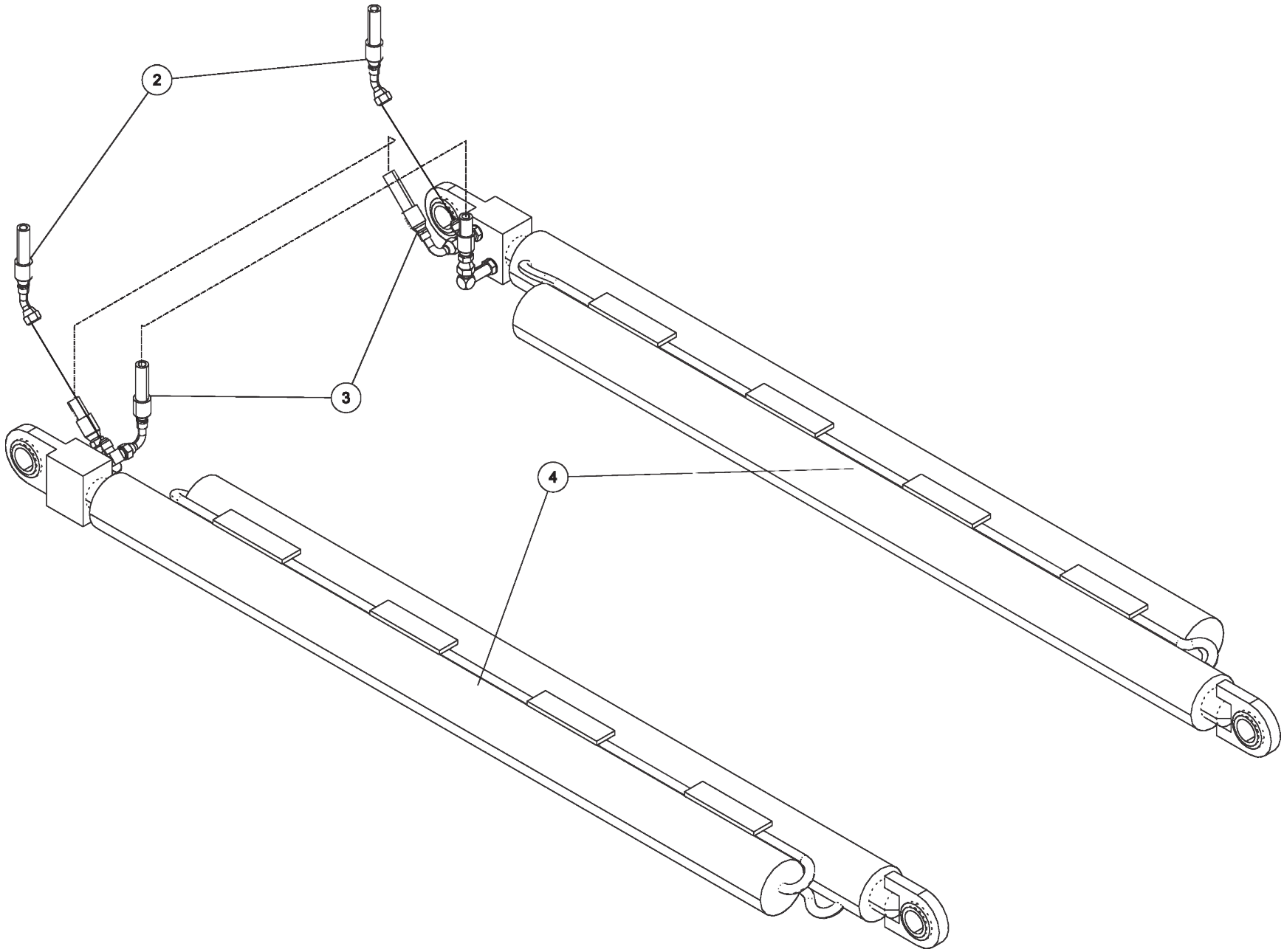

09003929 UNDERLIFT HORIZONTAL BOOM ASSEMBLY (cont'd)

ITEM	PART NUMBER	DESCRIPTION	QTY
	09003929	UNDERLIFT HORIZONTAL BOOM ASSY	
1	0300113	GREASE FITTING, 1/4-28 STR	4
2	03003427	HOSE, HYD 192" LG	2
3	0303968	HOSE HYD, 10" LG	2
4	0307425	CYL, HYD - U/L BOOM EXTEND	2
5	0307460	FITTING, HYD 6MJ-6MB90LL	2
6	0311442	WEAR PAD (15/16 x 1 x 4)	2
7	0400079	SCREW, 1/4-20X3/4 FHS GR5	8
8	0400086	SCREW, 1/4-20X1-1/4 FHS	4
9	0400118	SCREW, 5/16-18X3/4 HHC GR5	3
10	0400139	SET SCREW, 3/8-16X1-1/2 SOC	1
11	0400249	SCREW, 5/8-11X1-1/4 SHC	2
12	0400344	SCREW, 1/2-13X3/4 FHS GR8	8
13	0400379	NUT, 5/16-18 SPR J	1
14	0400392	NUT, 3/8-16 LOK	1
15	0400463	WASHER, 5/16	3
16	0400464	LKWASHER, 5/16	3
17	0400594	SCREW, 1/4-20X5/8 FHS	4
18	0400749	SCREW, 1/2-13X1-1/4 FHS	18
19	0400990	SET SCREW, 1/2-13X1/2 SOC	4
20	07004402	ANGLE, HOSE COVER	1
21	07004403	PLATE, HOSE COVER	1
22	0717869	PLATE, SPACER (BOLT-ON)	4
23	0717871	PIN, CYLINDER ROD	1
24	0717872	PIN, EXTEND CYLINDER BASE	1
25	0717873	PIN, SHEAR OUTER BOOM	2
26	0718087	PLATE - PAD SPACER	2
27	0718096	BLOCK, STOP	2
28	0724419	PLATE-PLUG RETAINER	2
29	08001288	EXTEND CYL BRACKET WELDMENT	1
30	08003427	U/L OUTER BOOM WELDMENT	1
31	0810106	2nd STAGE BOOM WLMT	1
32	0908282	INNER BOOM ASSY	1
33	9012594	FITT,HYD RUN TEE, 6MJx6MBx6MJ	2
34	930150003	TOP PADS	6
35	GH246	SPLIT RUBBER GROMMET	2

09003929 UNDERLIFT HORIZONTAL BOOM ASSEMBLY (cont'd)

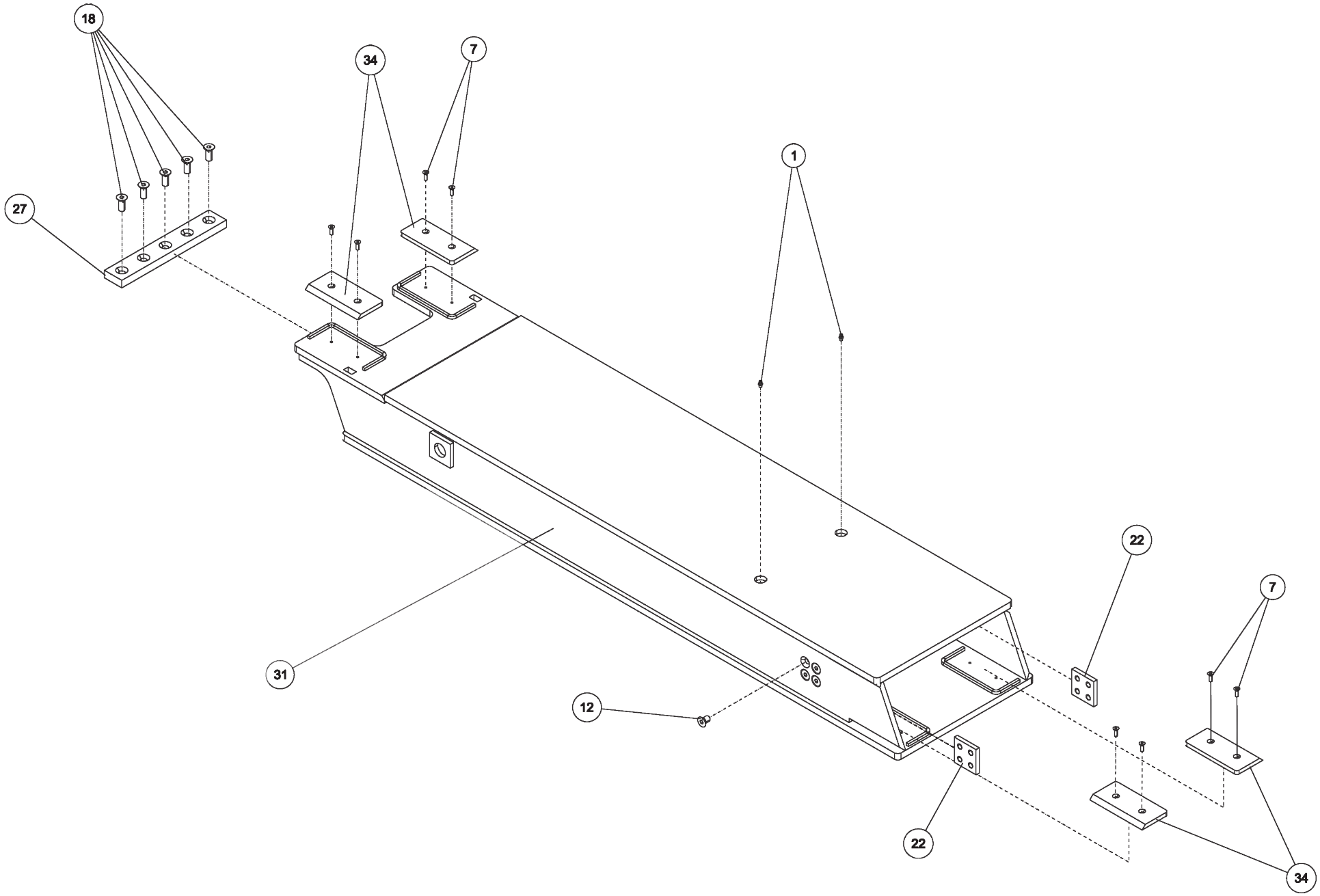

09003929 UNDERLIFT HORIZONTAL BOOM ASSEMBLY (cont'd)

ITEM	PART NUMBER	DESCRIPTION	QTY
	09003929	UNDERLIFT HORIZONTAL BOOM ASSY	
1	0300113	GREASE FITTING, 1/4-28 STR	4
2	03003427	HOSE, HYD 192" LG	2
3	0303968	HOSE HYD, 10" LG	2
4	0307425	CYL, HYD - U/L BOOM EXTEND	2
5	0307460	FITTING, HYD 6MJ-6MB90LL	2
6	0311442	WEAR PAD (15/16 x 1 x 4)	2
7	0400079	SCREW, 1/4-20X3/4 FHS GR5	8
8	0400086	SCREW, 1/4-20X1-1/4 FHS	4
9	0400118	SCREW, 5/16-18X3/4 HHC GR5	3
10	0400139	SET SCREW, 3/8-16X1-1/2 SOC	1
11	0400249	SCREW, 5/8-11X1-1/4 SHC	2
12	0400344	SCREW, 1/2-13X3/4 FHS GR8	8
13	0400379	NUT, 5/16-18 SPR J	1
14	0400392	NUT, 3/8-16 LOK	1
15	0400463	WASHER, 5/16	3
16	0400464	LKWASHER, 5/16	3
17	0400594	SCREW, 1/4-20X5/8 FHS	4
18	0400749	SCREW, 1/2-13X1-1/4 FHS	18
19	0400990	SET SCREW, 1/2-13X1/2 SOC	4
20	07004402	ANGLE, HOSE COVER	1
21	07004403	PLATE, HOSE COVER	1
22	0717869	PLATE, SPACER (BOLT-ON)	4
23	0717871	PIN, CYLINDER ROD	1
24	0717872	PIN, EXTEND CYLINDER BASE	1
25	0717873	PIN, SHEAR OUTER BOOM	2
26	0718087	PLATE - PAD SPACER	2
27	0718096	BLOCK, STOP	2
28	0724419	PLATE-PLUG RETAINER	2
29	08001288	EXTEND CYL BRACKET WELDMENT	1
30	08003427	U/L OUTER BOOM WELDMENT	1
31	0810106	2nd STAGE BOOM WLMT	1
32	0908282	INNER BOOM ASSY	1
33	9012594	FITT,HYD RUN TEE, 6MJx6MBx6MJ	2
34	930150003	TOP PADS	6
35	GH246	SPLIT RUBBER GROMMET	2

09003929 UNDERLIFT HORIZONTAL BOOM ASSEMBLY (cont'd)

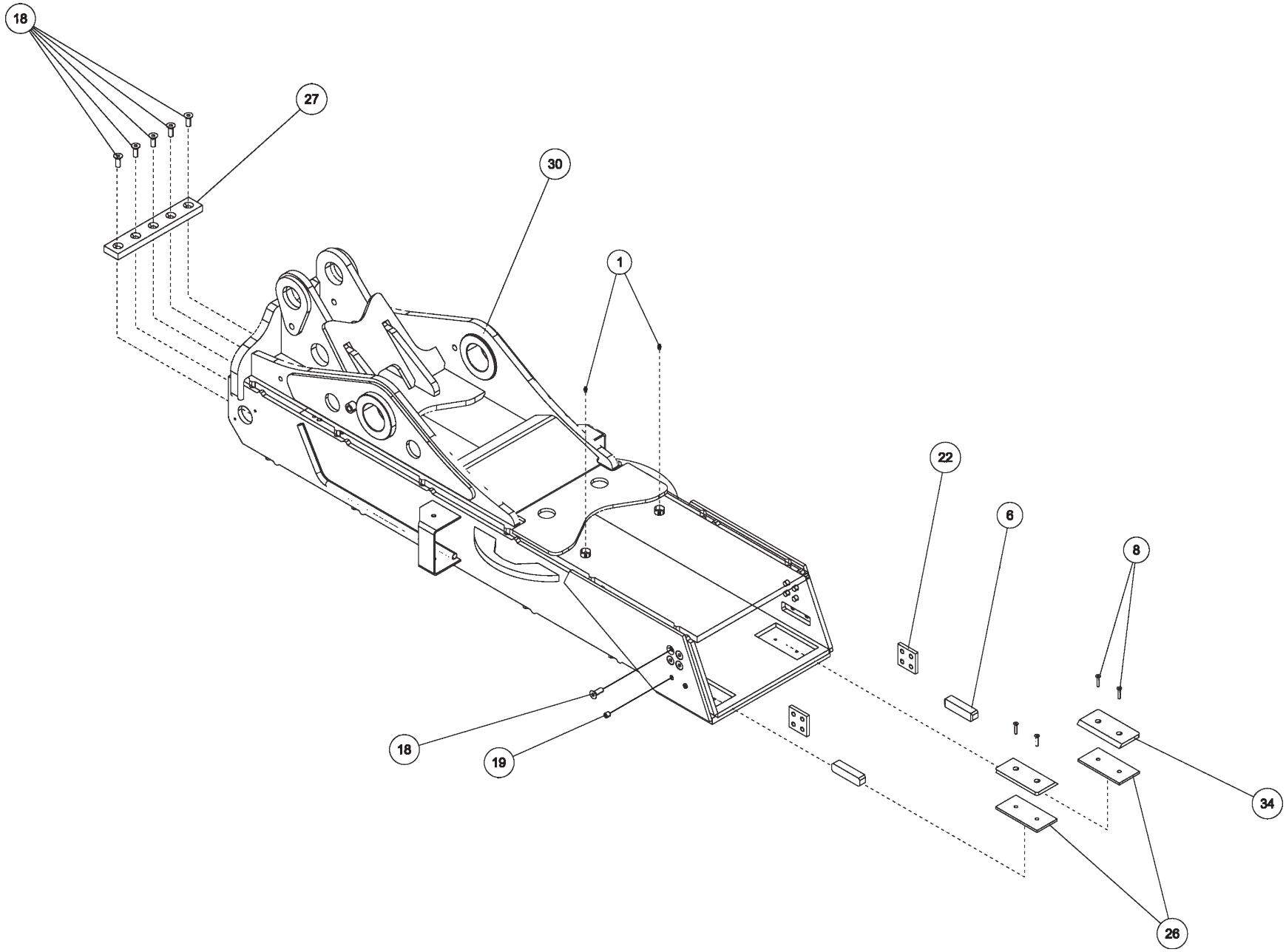

09003929 UNDERLIFT HORIZONTAL BOOM ASSEMBLY (cont'd)

ITEM	PART NUMBER	DESCRIPTION	QTY
	09003929	UNDERLIFT HORIZONTAL BOOM ASSY	
1	0300113	GREASE FITTING, 1/4-28 STR	4
2	03003427	HOSE, HYD 192" LG	2
3	0303968	HOSE HYD, 10" LG	2
4	0307425	CYL, HYD - U/L BOOM EXTEND	2
5	0307460	FITTING, HYD 6MJ-6MB90LL	2
6	0311442	WEAR PAD (15/16 x 1 x 4)	2
7	0400079	SCREW, 1/4-20X3/4 FHS GR5	8
8	0400086	SCREW, 1/4-20X1-1/4 FHS	4
9	0400118	SCREW, 5/16-18X3/4 HHC GR5	3
10	0400139	SET SCREW, 3/8-16X1-1/2 SOC	1
11	0400249	SCREW, 5/8-11X1-1/4 SHC	2
12	0400344	SCREW, 1/2-13X3/4 FHS GR8	8
13	0400379	NUT, 5/16-18 SPR J	1
14	0400392	NUT, 3/8-16 LOK	1
15	0400463	WASHER, 5/16	3
16	0400464	LKWASHER, 5/16	3
17	0400594	SCREW, 1/4-20X5/8 FHS	4
18	0400749	SCREW, 1/2-13X1-1/4 FHS	18
19	0400990	SET SCREW, 1/2-13X1/2 SOC	4
20	07004402	ANGLE, HOSE COVER	1
21	07004403	PLATE, HOSE COVER	1
22	0717869	PLATE, SPACER (BOLT-ON)	4
23	0717871	PIN, CYLINDER ROD	1
24	0717872	PIN, EXTEND CYLINDER BASE	1
25	0717873	PIN, SHEAR OUTER BOOM	2
26	0718087	PLATE - PAD SPACER	2
27	0718096	BLOCK, STOP	2
28	0724419	PLATE-PLUG RETAINER	2
29	08001288	EXTEND CYL BRACKET WELDMENT	1
30	08003427	U/L OUTER BOOM WELDMENT	1
31	0810106	2nd STAGE BOOM WLMT	1
32	0908282	INNER BOOM ASSY	1
33	9012594	FITT,HYD RUN TEE, 6MJx6MBx6MJ	2
34	930150003	TOP PADS	6
35	GH246	SPLIT RUBBER GROMMET	2

09003929 UNDERLIFT HORIZONTAL BOOM ASSEMBLY (cont'd)

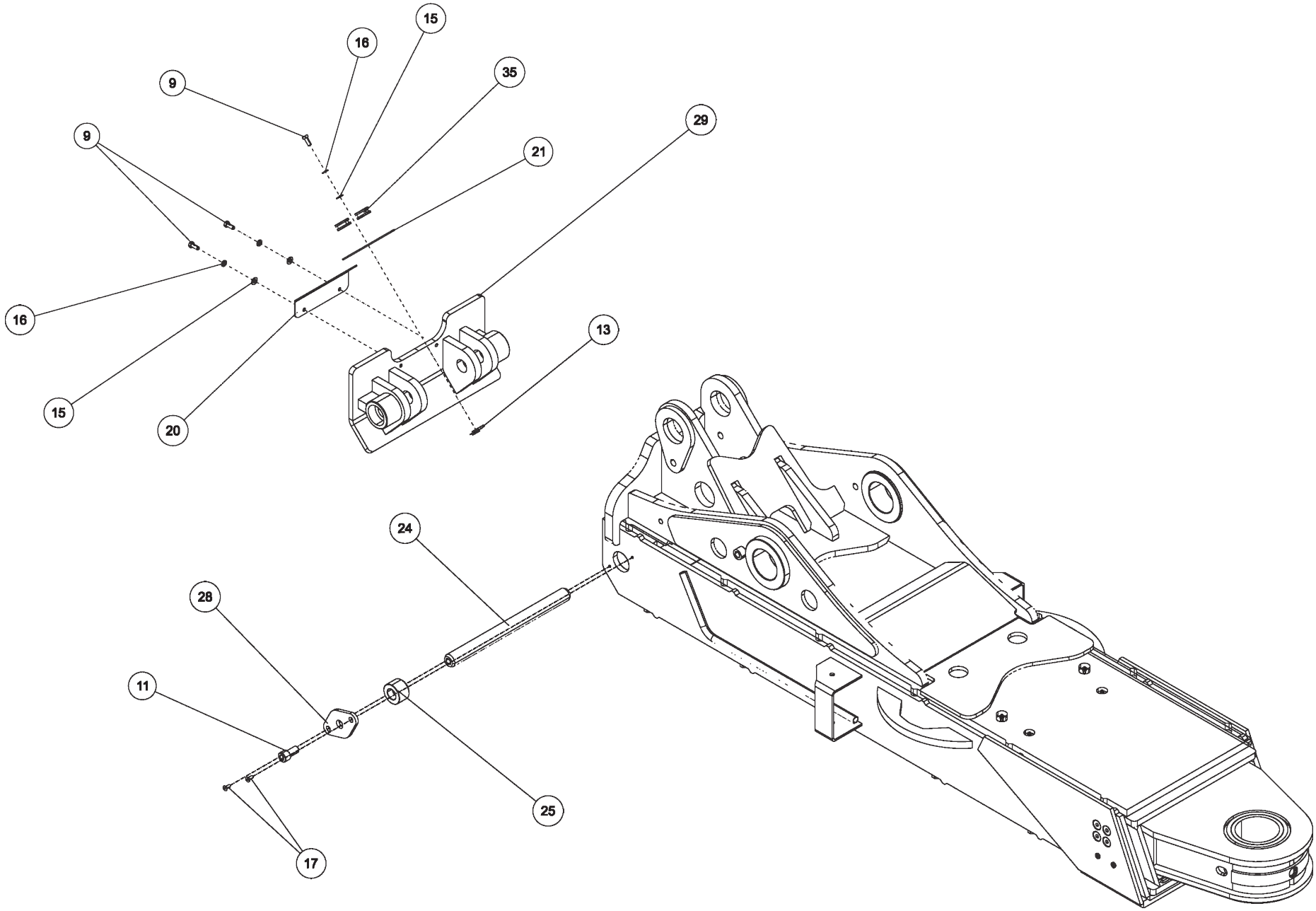

09003929 UNDERLIFT HORIZONTAL BOOM ASSEMBLY (cont'd)

ITEM	PART NUMBER	DESCRIPTION	QTY
	09003929	UNDERLIFT HORIZONTAL BOOM ASSY	
1	0300113	GREASE FITTING, 1/4-28 STR	4
2	03003427	HOSE, HYD 192" LG	2
3	0303968	HOSE HYD, 10" LG	2
4	0307425	CYL, HYD - U/L BOOM EXTEND	2
5	0307460	FITTING, HYD 6MJ-6MB90LL	2
6	0311442	WEAR PAD (15/16 x 1 x 4)	2
7	0400079	SCREW, 1/4-20X3/4 FHS GR5	8
8	0400086	SCREW, 1/4-20X1-1/4 FHS	4
9	0400118	SCREW, 5/16-18X3/4 HHC GR5	3
10	0400139	SET SCREW, 3/8-16X1-1/2 SOC	1
11	0400249	SCREW, 5/8-11X1-1/4 SHC	2
12	0400344	SCREW, 1/2-13X3/4 FHS GR8	8
13	0400379	NUT, 5/16-18 SPR J	1
14	0400392	NUT, 3/8-16 LOK	1
15	0400463	WASHER, 5/16	3
16	0400464	LKWASHER, 5/16	3
17	0400594	SCREW, 1/4-20X5/8 FHS	4
18	0400749	SCREW, 1/2-13X1-1/4 FHS	18
19	0400990	SET SCREW, 1/2-13X1/2 SOC	4
20	07004402	ANGLE, HOSE COVER	1
21	07004403	PLATE, HOSE COVER	1
22	0717869	PLATE, SPACER (BOLT-ON)	4
23	0717871	PIN, CYLINDER ROD	1
24	0717872	PIN, EXTEND CYLINDER BASE	1
25	0717873	PIN, SHEAR OUTER BOOM	2
26	0718087	PLATE - PAD SPACER	2
27	0718096	BLOCK, STOP	2
28	0724419	PLATE-PLUG RETAINER	2
29	08001288	EXTEND CYL BRACKET WELDMENT	1
30	08003427	U/L OUTER BOOM WELDMENT	1
31	0810106	2nd STAGE BOOM WLMT	1
32	0908282	INNER BOOM ASSY	1
33	9012594	FITT,HYD RUN TEE, 6MJx6MBx6MJ	2
34	930150003	TOP PADS	6
35	GH246	SPLIT RUBBER GROMMET	2

0908282 INNER BOOM ASSEMBLY

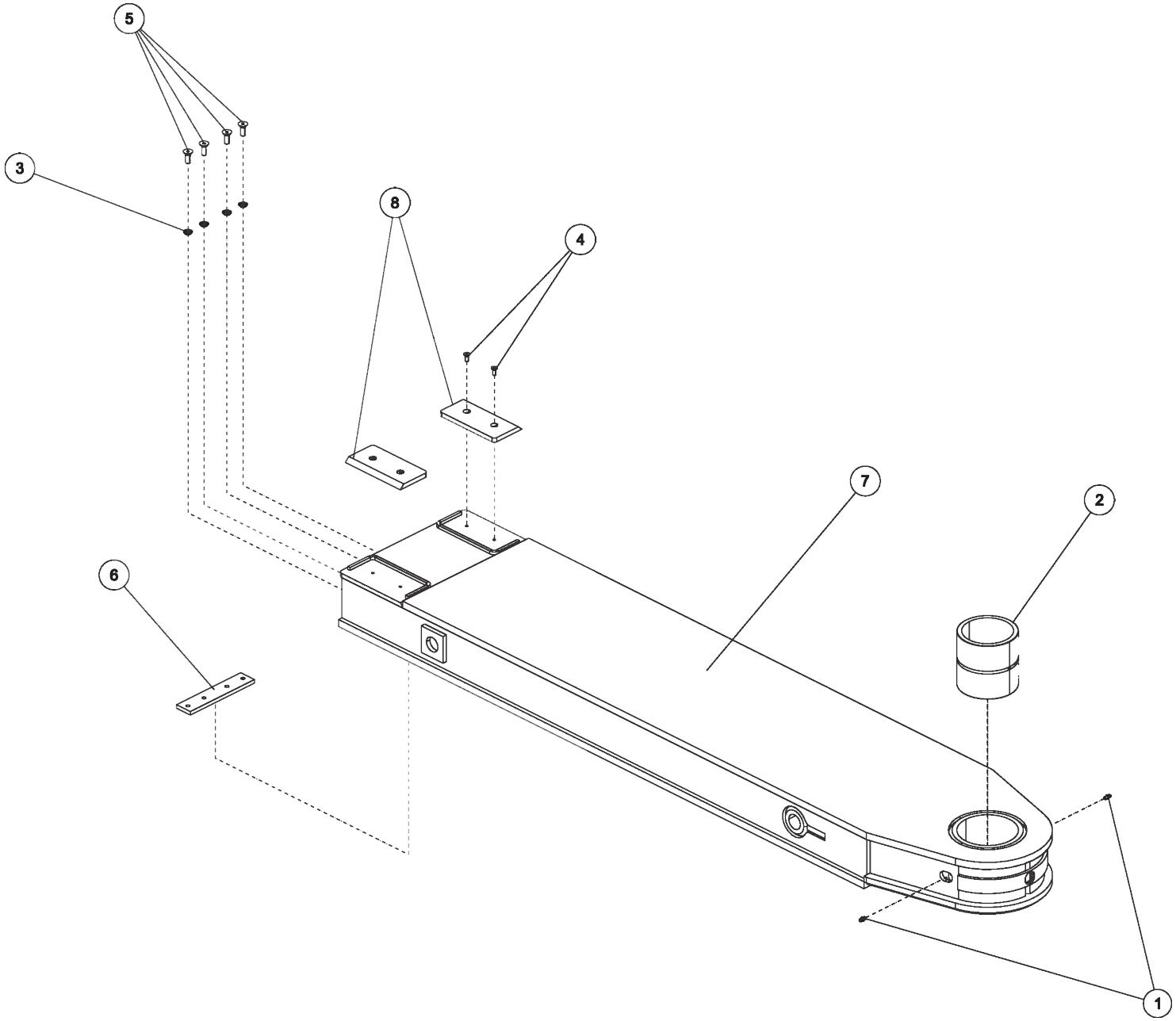

0908282 INNER BOOM ASSEMBLY (cont'd)

ITEM	PART NUMBER	DESCRIPTION	QTY
	0908282	INNER BOOM ASSEMBLY	
1	0300113	GREASE FITTING, 1/4-28 STR	2
2	0303088	BUSHING - PIVOT PIN	1
3	0400483	LKWASHER, 3/8 CET	4
4	0400594	SCREW, 1/4-20X5/8 FHS	4
5	0400653	SCREW, 3/8-24X1 FHS	4
6	0706996	PAD, SPACER	1
7	0806813	BOOM - 3rd STAGE WLMT U/L	1
8	930150003	TOP PADS	2

09009470 SUBFRAME ASSEMBLY, 1140 RXP KB

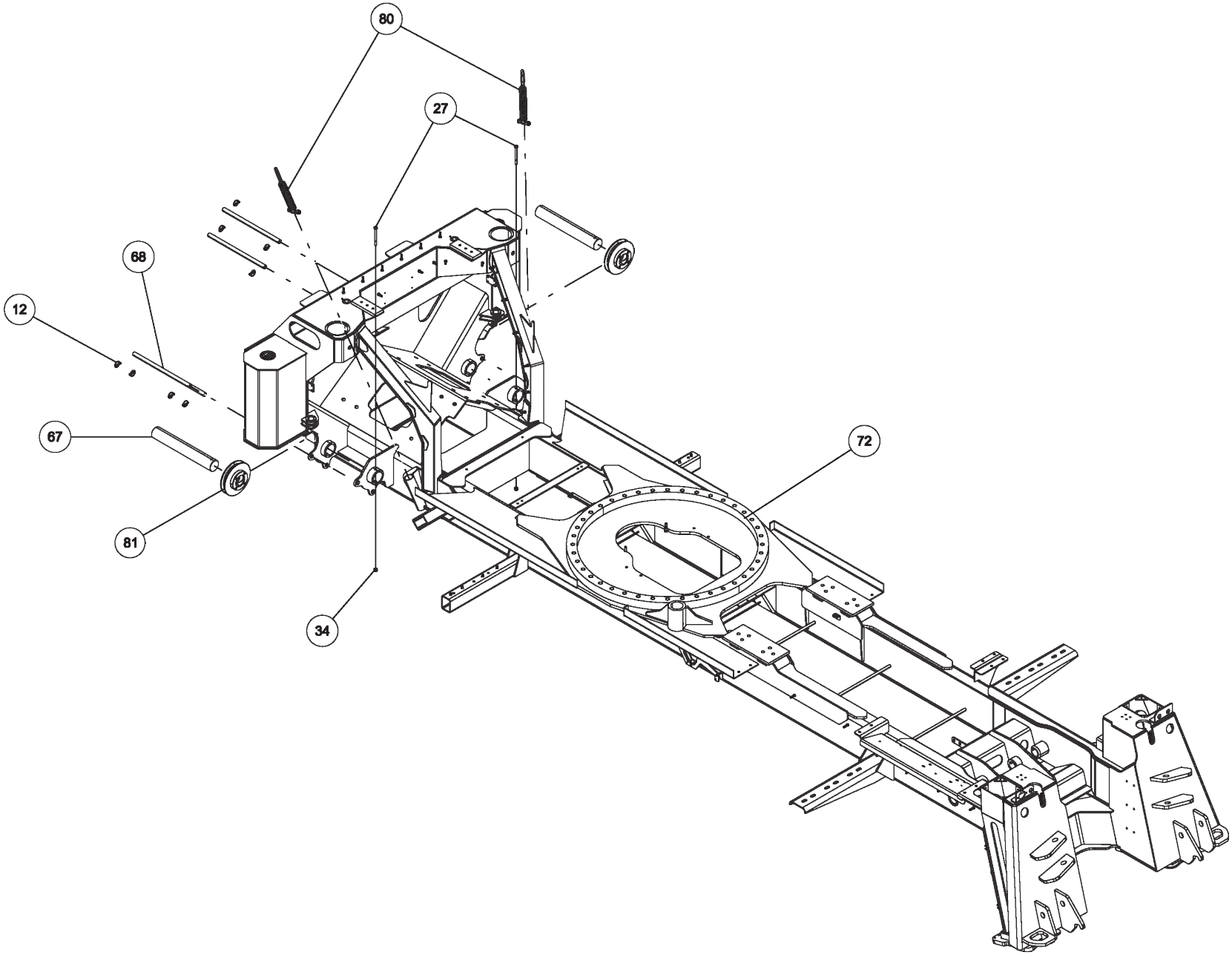

09009470 SUBFRAME ASSEMBLY, 1140 RXP KB (cont'd)

ITEM	PART NUMBER	DESCRIPTION	QTY
	09009470	SUBFRAME ASSEMBLY 1140 RXP KB	
1	0300041	CONNECTOR, 8MJ-8MB	4
2	0300108	SNAP RING, 2.5 5100-250	2
3	0300113	GREASE FITTING, 1/4-28 STR	5
4	0300229	FITTING, ELB 8MJ-8MP90	1
5	0301368	ADAPTER, 16MB-12MJ	1
6	0301470	FITTING, 90ELB 6MJ-8MB90	3
7	0301620	FITTING, HYD. 6MJ - 6MB90	4
8	0301696	FITTING, ELB 90 DEG 6MJ-6FJX90	2
9	0301895	GREASE FITTING, 1/8 STR PTF	7
10	0302065	FITTING, 6-FJ CAP	1
11	0302170	FITTING, SWV 90 DEG BENT	2
12	0302474	PIN, LINCH 3/16	8
13	0302538	BUSHING - U/L	2
14	0302575	FITTING-BULKHEAD RUN TEE	2
15	0302727	FITTING, HYD CONN	3
16	0306746	CYL HYD - FOLD	2
17	0307061	WINCH-35K dp 2-SP N.DRUM W/TEN	2
18	0307345	CONNECTOR, 16FJ-12MJ	1
19	0310406	VALVE, SHUTTLE LS10-30-8T-N	1
20	0310432	FITTING - ADAPTER 16MJ-20MB	2
21	0312570	BEARING - ROTATOR 1130/1140	1
22	0312575	BOOM PIVOT BRKT-MACHINED	2
23	0400070	SCREW, 1/4-20X1 HHC GR5	8
24	0400078	SCREW, 1/4-20X2 HHC GR5	2
25	0400109	SCREW, 5/16-18X1 HHC GR5	4
26	0400126	SCREW, 3/8-16X1 HHC GR5	4
27	0400206	SCREW, 1/2-13X5 HHC GR5	2
28	0400237	SCREW, 1/2-13X4 HHC GR5	2
29	0400262	SCREW, 5/8-11X2-1/2 HHC GR8	32
30	0400286	SCREW, 3/4-10X2-3/4 HHC GR8	12
31	0400336	SCREW, 1-8X3 HHC GR8	40
32	0400367	NUT, 1/4-20 LOK	2
33	0400379	NUT, 5/16-18 SPR J	8
34	0400408	NUT, 1/2-13 LOK	6
35	0400426	NUT, 5/8-11 LOK GR8	32
36	0400431	NUT, 3/4-10 LOK GR8	12
37	0400451	WASHER, 1/4	2
38	0400452	LKWASHER, 1/4	8
39	0400467	WASHER, SAE 1/2" HARDENED PL	2
40	0400480	WASHER, 3/8	4
41	0400482	LKWASHER, 3/8	4
42	0400491	LKWASHER, 1/2	10
43	0400497	WASHER, 1/2 GR8	2
44	0400503	WASHER, 5/8 GR8	32
45	0400522	WASHER, 1-1/16X2X1/8 TH YZ	40
46	0400980	SCREW, 3/8-16X1 FHS	12
47	0402032	SCREW, 5/16-18X1 HHC SS	4
48	0402043	SCREW, 3/8-16X1-1/4 HHC SS	16
49	0402110	WASHER, 1/4 SS	4
50	0402118	LKWASHER, 5/16 SS	4
51	0402121	LKWASHER, 3/8 SS	16
52	07002416	PIN, U/L LIFT CYLINDER BASE	2
53	07002417	COVER, LEFT CHAIN BOX	1
54	07002418	COVER, RIGHT CAHIN BOX	1
55	07002692	FLOOR SHEET, MID CENTER COVER	1
56	07002693	FLOOR SHEET, LEFT MID DECK	1
57	07002696	FLOOR SHEET, RIGHT MID DECK	1
58	07002697	FLOOR SHEET, LEFT REAR DECK	1
59	07002698	FLOOR SHEET, RIGHT REAR DECK	1
60	07002699	CHANNEL, VALVE COVER	1
61	07008501	PLATE, FRONT HYD COVER	1
62	07030626	PLATE - SPACER	4
63	0715947	ANGLE, WINCH MTG	2
64	0715948	ANGLE, WINCH MTG	2
65	0715949	ANGLE, WINCH MTG	2
66	0715950	ANGLE, WINCH MTG	2
67	0717763	PIN, FLEET SHEAVE	2
68	0717843	PIN, CABLE RETAINER	4
69	0722002	PLATE - REAR O/R COVER	2
70	0724476	PAD - NYLATRON - BBOM GUIDE	2
71	0725440	SHIM, WINCH, 35K DP	8
72	08004865	SUBFRAME WLMT - 1140 RXP KNEEB	1
73	0806727	PIN - PIVOT WLD'T	2
74	0807433	SWING LIMIT ANGLE WELDMENT	1
75	09000229	PIVOT MTG HOUSE LOCK ASSY	2
76	09002243	VALVE ASSY, 1150 KNEE MAIN	1
77	09002244	VALVE ASSY, 1150 KNEE BOOM U/L	1
78	09002246	VALVE ASSY, PRESSURE REDUCING	1
79	09009468	O/R CONTR VALVE KIT	1
80	0906572	KIT-WINCH CABLE STOW	2
81	0908055	REVERSING SHEAVE SUB-ASSEMBLY	2
82	0908062	CABLE SHEAVE & TENSIONER ASSY	2
83	0908432	ROTATOR PINLOCK ASSY	1
84	0911959	KIT, DRING PARTS W/SPACER WASH	4
85	24679012	LH LEG ASSEMBLY (USA)	1
86	24679013	RH LEG ASSEMBLY (USA)	1
87	25559013	RESERVOIR ASSEMBLY SPO	1
88	26687634	THRUST WASHER	2
89	805352500	PIN WELD'T UPPER TILT CY	4
90	9010520	FITTING-ELBOW 1/4T-1/4NPT	2
91	9041402	1/2 NC X 1 1/4 HHCS PLT GR8	10
92	HA293	FITTING-ADPTR SWV RUN	1

09009470 SUBFRAME ASSEMBLY, 1140 RXP KB (cont'd)

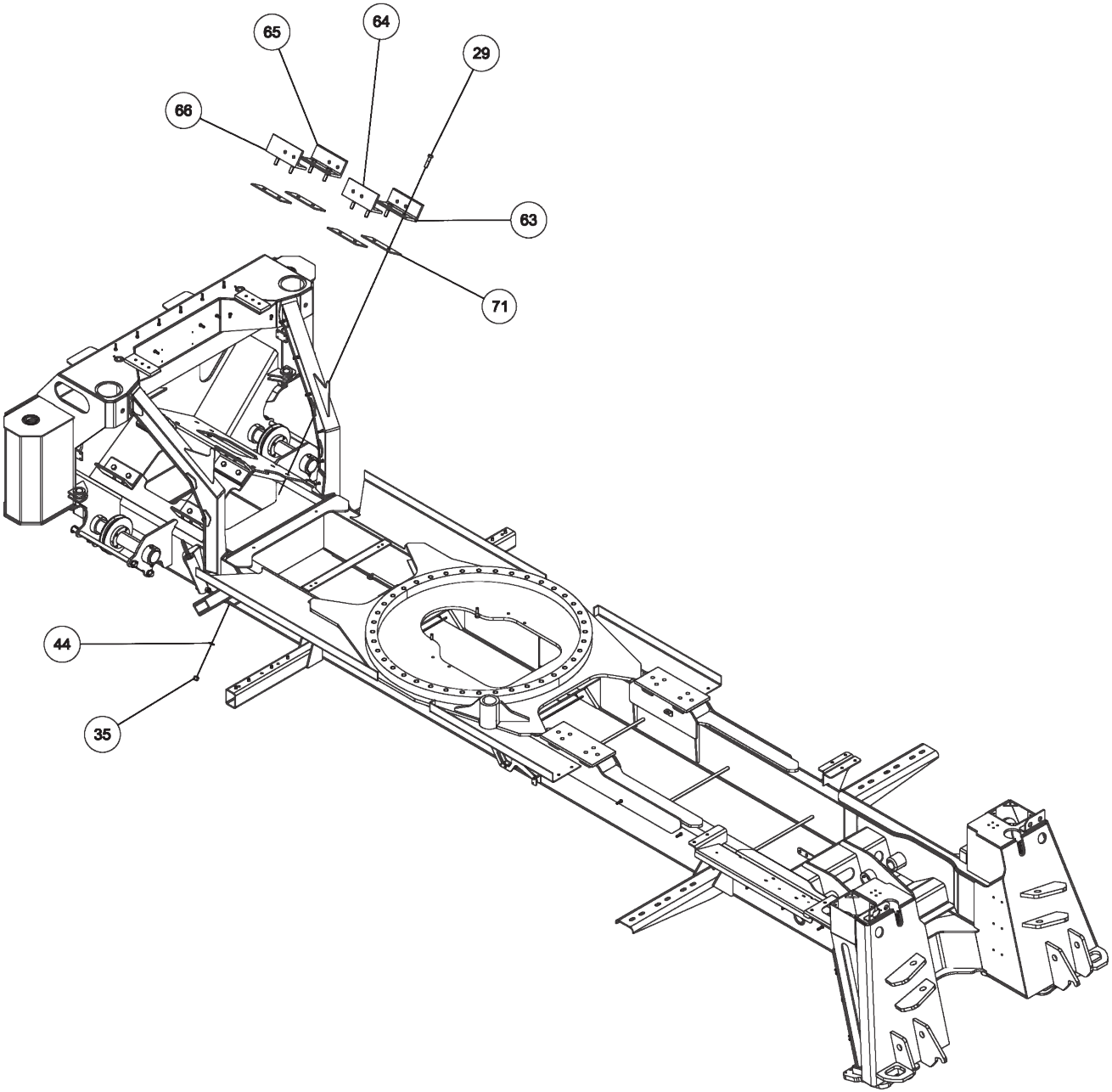

09009470 SUBFRAME ASSEMBLY, 1140 RXP KB (cont'd)

ITEM	PART NUMBER	DESCRIPTION	QTY
	09009470	SUBFRAME ASSEMBLY 1140 RXP KB	
1	0300041	CONNECTOR, 8MJ-8MB	4
2	0300108	SNAP RING, 2.5 5100-250	2
3	0300113	GREASE FITTING, 1/4-28 STR	5
4	0300229	FITTING, ELB 8MJ-8MP90	1
5	0301368	ADAPTER, 16MB-12MJ	1
6	0301470	FITTING, 90ELB 6MJ-8MB90	3
7	0301620	FITTING, HYD. 6MJ - 6MB90	4
8	0301696	FITTING, ELB 90 DEG 6MJ-6FJX90	2
9	0301895	GREASE FITTING, 1/8 STR PTF	7
10	0302065	FITTING, 6-FJ CAP	1
11	0302170	FITTING, SWV 90 DEG BENT	2
12	0302474	PIN, LINCH 3/16	8
13	0302538	BUSHING - U/L	2
14	0302575	FITTING-BULKHEAD RUN TEE	2
15	0302727	FITTING, HYD CONN	3
16	0306746	CYL HYD - FOLD	2
17	0307061	WINCH-35K dp 2-SP N.DRUM W/TEN	2
18	0307345	CONNECTOR, 16FJ-12MJ	1
19	0310406	VALVE, SHUTTLE LS10-30-8T-N	1
20	0310432	FITTING - ADAPTER 16MJ-20MB	2
21	0312570	BEARING - ROTATOR 1130/1140	1
22	0312575	BOOM PIVOT BRKT-MACHINED	2
23	0400070	SCREW, 1/4-20X1 HHC GR5	8
24	0400078	SCREW, 1/4-20X2 HHC GR5	2
25	0400109	SCREW, 5/16-18X1 HHC GR5	4
26	0400126	SCREW, 3/8-16X1 HHC GR5	4
27	0400206	SCREW, 1/2-13X5 HHC GR5	2
28	0400237	SCREW, 1/2-13X4 HHC GR5	2
29	0400262	SCREW, 5/8-11X2-1/2 HHC GR8	32
30	0400286	SCREW, 3/4-10X2-3/4 HHC GR8	12
31	0400336	SCREW, 1-8X3 HHC GR8	40

ITEM	PART NUMBER	DESCRIPTION	QTY
32	0400367	NUT, 1/4-20 LOK	2
33	0400379	NUT, 5/16-18 SPR J	8
34	0400408	NUT, 1/2-13 LOK	6
35	0400426	NUT, 5/8-11 LOK GR8	32
36	0400431	NUT, 3/4-10 LOK GR8	12
37	0400451	WASHER, 1/4	2
38	0400452	LKWASHER, 1/4	8
39	0400467	WASHER, SAE 1/2" HARDENED PL	2
40	0400480	WASHER, 3/8	4
41	0400482	LKWASHER, 3/8	4
42	0400491	LKWASHER, 1/2	10
43	0400497	WASHER, 1/2 GR8	2
44	0400503	WASHER, 5/8 GR8	32
45	0400522	WASHER, 1-1/16X2X1/8 TH YZ	40
46	0400980	SCREW, 3/8-16X1 FHS	12
47	0402032	SCREW, 5/16-18X1 HHC SS	4
48	0402043	SCREW, 3/8-16X1-1/4 HHC SS	16
49	0402110	WASHER, 1/4 SS	4
50	0402118	LKWASHER, 5/16 SS	4
51	0402121	LKWASHER, 3/8 SS	16
52	07002416	PIN, U/L LIFT CYLINDER BASE	2
53	07002417	COVER, LEFT CHAIN BOX	1
54	07002418	COVER, RIGHT CAHIN BOX	1
55	07002692	FLOOR SHEET, MID CENTER COVER	1
56	07002693	FLOOR SHEET, LEFT MID DECK	1
57	07002696	FLOOR SHEET, RIGHT MID DECK	1
58	07002697	FLOOR SHEET, LEFT REAR DECK	1
59	07002698	FLOOR SHEET, RIGHT REAR DECK	1
60	07002699	CHANNEL, VALVE COVER	1
61	07008501	PLATE, FRONT HYD COVER	1
62	07030626	PLATE - SPACER	4
63	0715947	ANGLE, WINCH MTG	2

ITEM	PART NUMBER	DESCRIPTION	QTY
64	0715948	ANGLE, WINCH MTG	2
65	0715949	ANGLE, WINCH MTG	2
66	0715950	ANGLE, WINCH MTG	2
67	0717763	PIN, FLEET SHEAVE	2
68	0717843	PIN, CABLE RETAINER	4
69	0722002	PLATE - REAR O/R COVER	2
70	0724476	PAD - NYLATRON - BBOM GUIDE	2
71	0725440	SHIM, WINCH, 35K DP	8
72	08004865	SUBFRAME WLMT - 1140 RXP KNEEB	1
73	0806727	PIN - PIVOT WLD'T	2
74	0807433	SWING LIMIT ANGLE WELDMENT	1
75	09000229	PIVOT MTG HOUSE LOCK ASSY	2
76	09002243	VALVE ASSY, 1150 KNEE MAIN	1
77	09002244	VALVE ASSY, 1150 KNEE BOOM U/L	1
78	09002246	VALVE ASSY, PRESSURE REDUCING	1
79	09009468	O/R CONTR VALVE KIT	1
80	0906572	KIT-WINCH CABLE STOW	2
81	0908055	REVERSING SHEAVE SUB-ASSEMBLY	2
82	0908062	CABLE SHEAVE & TENSIONER ASSY	2
83	0908432	ROTATOR PINLOCK ASSY	1
84	0911959	KIT, DRING PARTS W/SPACER WASH	4
85	24679012	LH LEG ASSEMBLY (USA)	1
86	24679013	RH LEG ASSEMBLY (USA)	1
87	25559013	RESERVOIR ASSEMBLY SPO	1
88	26687634	THRUST WASHER	2
89	805352500	PIN WELD'T UPPER TILT CY	4
90	9010520	FITTING-ELBOW 1/4T-1/4NPT	2
91	9041402	1/2 NC X 1 1/4 HHCS PLT GR8	10
92	HA293	FITTING-ADPTR SWV RUN	1

09009470 SUBFRAME ASSEMBLY, 1140 RXP KB (cont'd)

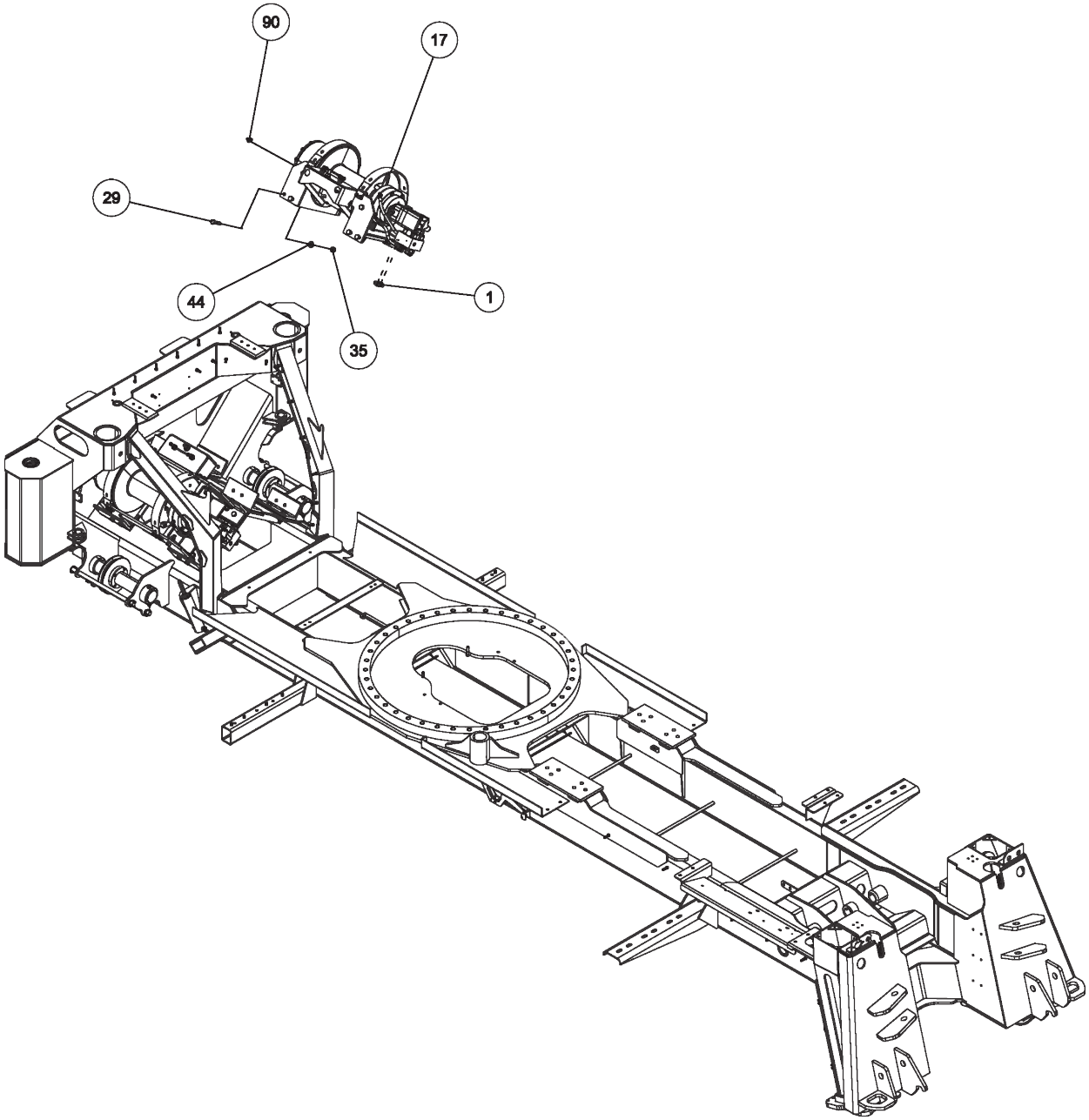

09009470 SUBFRAME ASSEMBLY, 1140 RXP KB (cont'd)

ITEM	PART NUMBER	DESCRIPTION	QTY
	09009470	SUBFRAME ASSEMBLY 1140 RXP KB	
1	0300041	CONNECTOR, 8MJ-8MB	4
2	0300108	SNAP RING, 2.5 5100-250	2
3	0300113	GREASE FITTING, 1/4-28 STR	5
4	0300229	FITTING, ELB 8MJ-8MP90	1
5	0301368	ADAPTER, 16MB-12MJ	1
6	0301470	FITTING, 90ELB 6MJ-8MB90	3
7	0301620	FITTING, HYD. 6MJ - 6MB90	4
8	0301696	FITTING, ELB 90 DEG 6MJ-6FJX90	2
9	0301895	GREASE FITTING, 1/8 STR PTF	7
10	0302065	FITTING, 6-FJ CAP	1
11	0302170	FITTING, SWV 90 DEG BENT	2
12	0302474	PIN, LINCH 3/16	8
13	0302538	BUSHING - U/L	2
14	0302575	FITTING-BULKHEAD RUN TEE	2
15	0302727	FITTING, HYD CONN	3
16	0306746	CYL HYD - FOLD	2
17	0307061	WINCH-35K dp 2-SP N.DRUM W/TEN	2
18	0307345	CONNECTOR, 16FJ-12MJ	1
19	0310406	VALVE, SHUTTLE LS10-30-8T-N	1
20	0310432	FITTING - ADAPTER 16MJ-20MB	2
21	0312570	BEARING - ROTATOR 1130/1140	1
22	0312575	BOOM PIVOT BRKT-MACHINED	2
23	0400070	SCREW, 1/4-20X1 HHC GR5	8
24	0400078	SCREW, 1/4-20X2 HHC GR5	2
25	0400109	SCREW, 5/16-18X1 HHC GR5	4
26	0400126	SCREW, 3/8-16X1 HHC GR5	4
27	0400206	SCREW, 1/2-13X5 HHC GR5	2
28	0400237	SCREW, 1/2-13X4 HHC GR5	2
29	0400262	SCREW, 5/8-11X2-1/2 HHC GR8	32
30	0400286	SCREW, 3/4-10X2-3/4 HHC GR8	12
31	0400336	SCREW, 1-8X3 HHC GR8	40

ITEM	PART NUMBER	DESCRIPTION	QTY
32	0400367	NUT, 1/4-20 LOK	2
33	0400379	NUT, 5/16-18 SPR J	8
34	0400408	NUT, 1/2-13 LOK	6
35	0400426	NUT, 5/8-11 LOK GR8	32
36	0400431	NUT, 3/4-10 LOK GR8	12
37	0400451	WASHER, 1/4	2
38	0400452	LKWASHER, 1/4	8
39	0400467	WASHER, SAE 1/2" HARDENED PL	2
40	0400480	WASHER, 3/8	4
41	0400482	LKWASHER, 3/8	4
42	0400491	LKWASHER, 1/2	10
43	0400497	WASHER, 1/2 GR8	2
44	0400503	WASHER, 5/8 GR8	32
45	0400522	WASHER, 1-1/16X2X1/8 TH YZ	40
46	0400980	SCREW, 3/8-16X1 FHS	12
47	0402032	SCREW, 5/16-18X1 HHC SS	4
48	0402043	SCREW, 3/8-16X1-1/4 HHC SS	16
49	0402110	WASHER, 1/4 SS	4
50	0402118	LKWASHER, 5/16 SS	4
51	0402121	LKWASHER, 3/8 SS	16
52	07002416	PIN, U/L LIFT CYLINDER BASE	2
53	07002417	COVER, LEFT CHAIN BOX	1
54	07002418	COVER, RIGHT CAHIN BOX	1
55	07002692	FLOOR SHEET, MID CENTER COVER	1
56	07002693	FLOOR SHEET, LEFT MID DECK	1
57	07002696	FLOOR SHEET, RIGHT MID DECK	1
58	07002697	FLOOR SHEET, LEFT REAR DECK	1
59	07002698	FLOOR SHEET, RIGHT REAR DECK	1
60	07002699	CHANNEL, VALVE COVER	1
61	07008501	PLATE, FRONT HYD COVER	1
62	07030626	PLATE - SPACER	4
63	0715947	ANGLE, WINCH MTG	2

ITEM	PART NUMBER	DESCRIPTION	QTY
64	0715948	ANGLE, WINCH MTG	2
65	0715949	ANGLE, WINCH MTG	2
66	0715950	ANGLE, WINCH MTG	2
67	0717763	PIN, FLEET SHEAVE	2
68	0717843	PIN, CABLE RETAINER	4
69	0722002	PLATE - REAR O/R COVER	2
70	0724476	PAD - NYLATRON - BBOM GUIDE	2
71	0725440	SHIM, WINCH, 35K DP	8
72	08004865	SUBFRAME WLMT - 1140 RXP KNEEB	1
73	0806727	PIN - PIVOT WLD'T	2
74	0807433	SWING LIMIT ANGLE WELDMENT	1
75	09000229	PIVOT MTG HOUSE LOCK ASSY	2
76	09002243	VALVE ASSY, 1150 KNEE MAIN	1
77	09002244	VALVE ASSY, 1150 KNEE BOOM U/L	1
78	09002246	VALVE ASSY, PRESSURE REDUCING	1
79	09009468	O/R CONTR VALVE KIT	1
80	0906572	KIT-WINCH CABLE STOW	2
81	0908055	REVERSING SHEAVE SUB-ASSEMBLY	2
82	0908062	CABLE SHEAVE & TENSIONER ASSY	2
83	0908432	ROTATOR PINLOCK ASSY	1
84	0911959	KIT, DRING PARTS W/SPACER WASH	4
85	24679012	LH LEG ASSEMBLY (USA)	1
86	24679013	RH LEG ASSEMBLY (USA)	1
87	25559013	RESERVOIR ASSEMBLY SPO	1
88	26687634	THRUST WASHER	2
89	805352500	PIN WELD'T UPPER TILT CY	4
90	9010520	FITTING-ELBOW 1/4T-1/4NPT	2
91	9041402	1/2 NC X 1 1/4 HHCS PLT GR8	10
92	HA293	FITTING-ADPTR SWV RUN	1

09009470 SUBFRAME ASSEMBLY, 1140 RXP KB (cont'd)

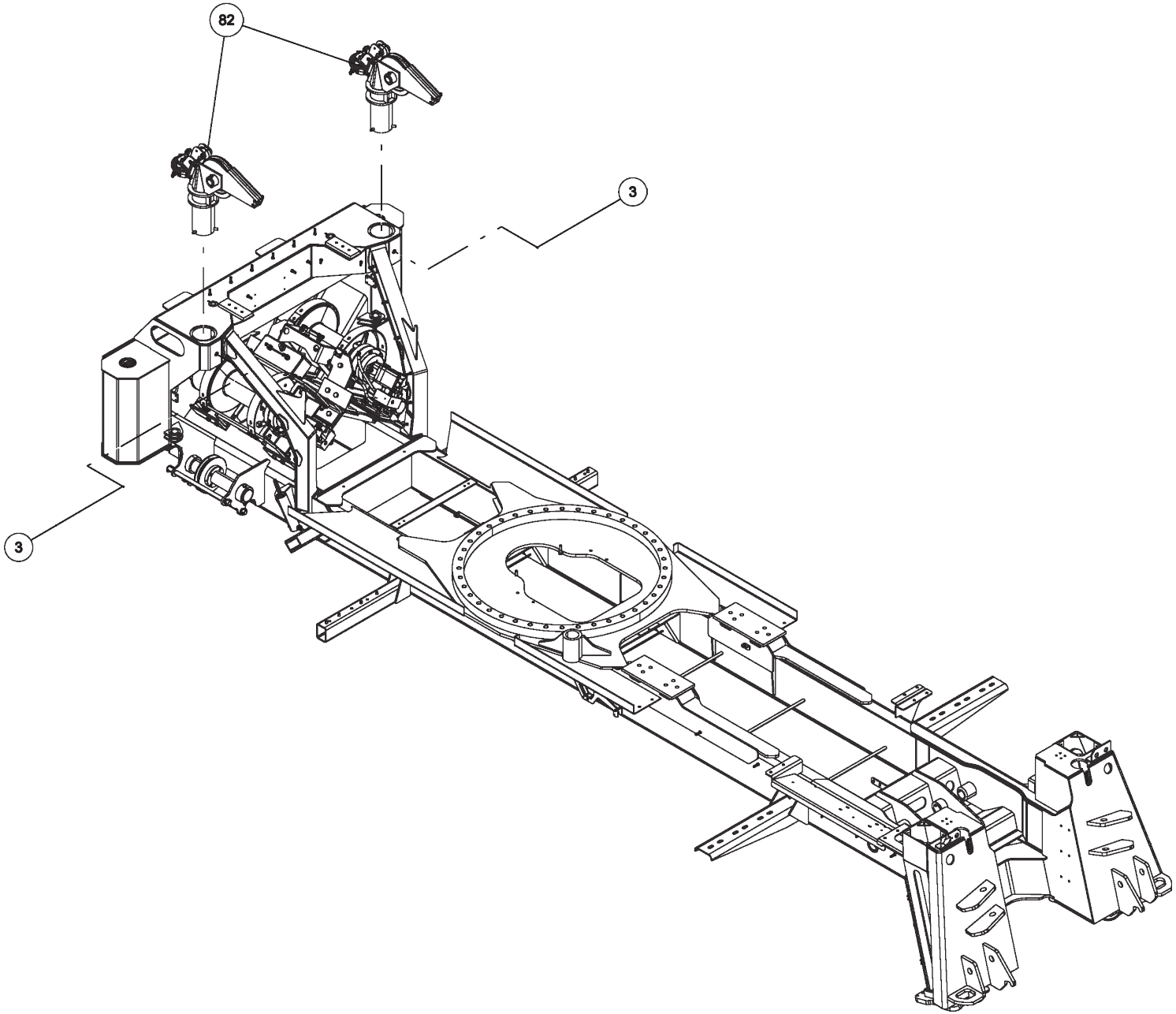

09009470 SUBFRAME ASSEMBLY, 1140 RXP KB (cont'd)

ITEM	PART NUMBER	DESCRIPTION	QTY
	09009470	SUBFRAME ASSEMBLY 1140 RXP KB	
1	0300041	CONNECTOR, 8MJ-8MB	4
2	0300108	SNAP RING, 2.5 5100-250	2
3	0300113	GREASE FITTING, 1/4-28 STR	5
4	0300229	FITTING, ELB 8MJ-8MP90	1
5	0301368	ADAPTER, 16MB-12MJ	1
6	0301470	FITTING, 90ELB 6MJ-8MB90	3
7	0301620	FITTING, HYD. 6MJ - 6MB90	4
8	0301696	FITTING, ELB 90 DEG 6MJ-6FJX90	2
9	0301895	GREASE FITTING, 1/8 STR PTF	7
10	0302065	FITTING, 6-FJ CAP	1
11	0302170	FITTING, SWV 90 DEG BENT	2
12	0302474	PIN, LINCH 3/16	8
13	0302538	BUSHING - U/L	2
14	0302575	FITTING-BULKHEAD RUN TEE	2
15	0302727	FITTING, HYD CONN	3
16	0306746	CYL HYD - FOLD	2
17	0307061	WINCH-35K dp 2-SP N.DRUM W/TEN	2
18	0307345	CONNECTOR, 16FJ-12MJ	1
19	0310406	VALVE, SHUTTLE LS10-30-8T-N	1
20	0310432	FITTING - ADAPTER 16MJ-20MB	2
21	0312570	BEARING - ROTATOR 1130/1140	1
22	0312575	BOOM PIVOT BRKT-MACHINED	2
23	0400070	SCREW, 1/4-20X1 HHC GR5	8
24	0400078	SCREW, 1/4-20X2 HHC GR5	2
25	0400109	SCREW, 5/16-18X1 HHC GR5	4
26	0400126	SCREW, 3/8-16X1 HHC GR5	4
27	0400206	SCREW, 1/2-13X5 HHC GR5	2
28	0400237	SCREW, 1/2-13X4 HHC GR5	2
29	0400262	SCREW, 5/8-11X2-1/2 HHC GR8	32
30	0400286	SCREW, 3/4-10X2-3/4 HHC GR8	12
31	0400336	SCREW, 1-8X3 HHC GR8	40

ITEM	PART NUMBER	DESCRIPTION	QTY
32	0400367	NUT, 1/4-20 LOK	2
33	0400379	NUT, 5/16-18 SPR J	8
34	0400408	NUT, 1/2-13 LOK	6
35	0400426	NUT, 5/8-11 LOK GR8	32
36	0400431	NUT, 3/4-10 LOK GR8	12
37	0400451	WASHER, 1/4	2
38	0400452	LKWASHER, 1/4	8
39	0400467	WASHER, SAE 1/2" HARDENED PL	2
40	0400480	WASHER, 3/8	4
41	0400482	LKWASHER, 3/8	4
42	0400491	LKWASHER, 1/2	10
43	0400497	WASHER, 1/2 GR8	2
44	0400503	WASHER, 5/8 GR8	32
45	0400522	WASHER, 1-1/16X2X1/8 TH YZ	40
46	0400980	SCREW, 3/8-16X1 FHS	12
47	0402032	SCREW, 5/16-18X1 HHC SS	4
48	0402043	SCREW, 3/8-16X1-1/4 HHC SS	16
49	0402110	WASHER, 1/4 SS	4
50	0402118	LKWASHER, 5/16 SS	4
51	0402121	LKWASHER, 3/8 SS	16
52	07002416	PIN, U/L LIFT CYLINDER BASE	2
53	07002417	COVER, LEFT CHAIN BOX	1
54	07002418	COVER, RIGHT CAHIN BOX	1
55	07002692	FLOOR SHEET, MID CENTER COVER	1
56	07002693	FLOOR SHEET, LEFT MID DECK	1
57	07002696	FLOOR SHEET, RIGHT MID DECK	1
58	07002697	FLOOR SHEET, LEFT REAR DECK	1
59	07002698	FLOOR SHEET, RIGHT REAR DECK	1
60	07002699	CHANNEL, VALVE COVER	1
61	07008501	PLATE, FRONT HYD COVER	1
62	07030626	PLATE - SPACER	4
63	0715947	ANGLE, WINCH MTG	2

ITEM	PART NUMBER	DESCRIPTION	QTY
64	0715948	ANGLE, WINCH MTG	2
65	0715949	ANGLE, WINCH MTG	2
66	0715950	ANGLE, WINCH MTG	2
67	0717763	PIN, FLEET SHEAVE	2
68	0717843	PIN, CABLE RETAINER	4
69	0722002	PLATE - REAR O/R COVER	2
70	0724476	PAD - NYLATRON - BBOM GUIDE	2
71	0725440	SHIM, WINCH, 35K DP	8
72	08004865	SUBFRAME WLMT - 1140 RXP KNEEB	1
73	0806727	PIN - PIVOT WLD'T	2
74	0807433	SWING LIMIT ANGLE WELDMENT	1
75	09000229	PIVOT MTG HOUSE LOCK ASSY	2
76	09002243	VALVE ASSY, 1150 KNEE MAIN	1
77	09002244	VALVE ASSY, 1150 KNEE BOOM U/L	1
78	09002246	VALVE ASSY, PRESSURE REDUCING	1
79	09009468	O/R CONTR VALVE KIT	1
80	0906572	KIT-WINCH CABLE STOW	2
81	0908055	REVERSING SHEAVE SUB-ASSEMBLY	2
82	0908062	CABLE SHEAVE & TENSIONER ASSY	2
83	0908432	ROTATOR PINLOCK ASSY	1
84	0911959	KIT, DRING PARTS W/SPACER WASH	4
85	24679012	LH LEG ASSEMBLY (USA)	1
86	24679013	RH LEG ASSEMBLY (USA)	1
87	25559013	RESERVOIR ASSEMBLY SPO	1
88	26687634	THRUST WASHER	2
89	805352500	PIN WELD'T UPPER TILT CY	4
90	9010520	FITTING-ELBOW 1/4T-1/4NPT	2
91	9041402	1/2 NC X 1 1/4 HHCS PLT GR8	10
92	HA293	FITTING-ADPTR SWV RUN	1

09009470 SUBFRAME ASSEMBLY, 1140 RXP KB (cont'd)

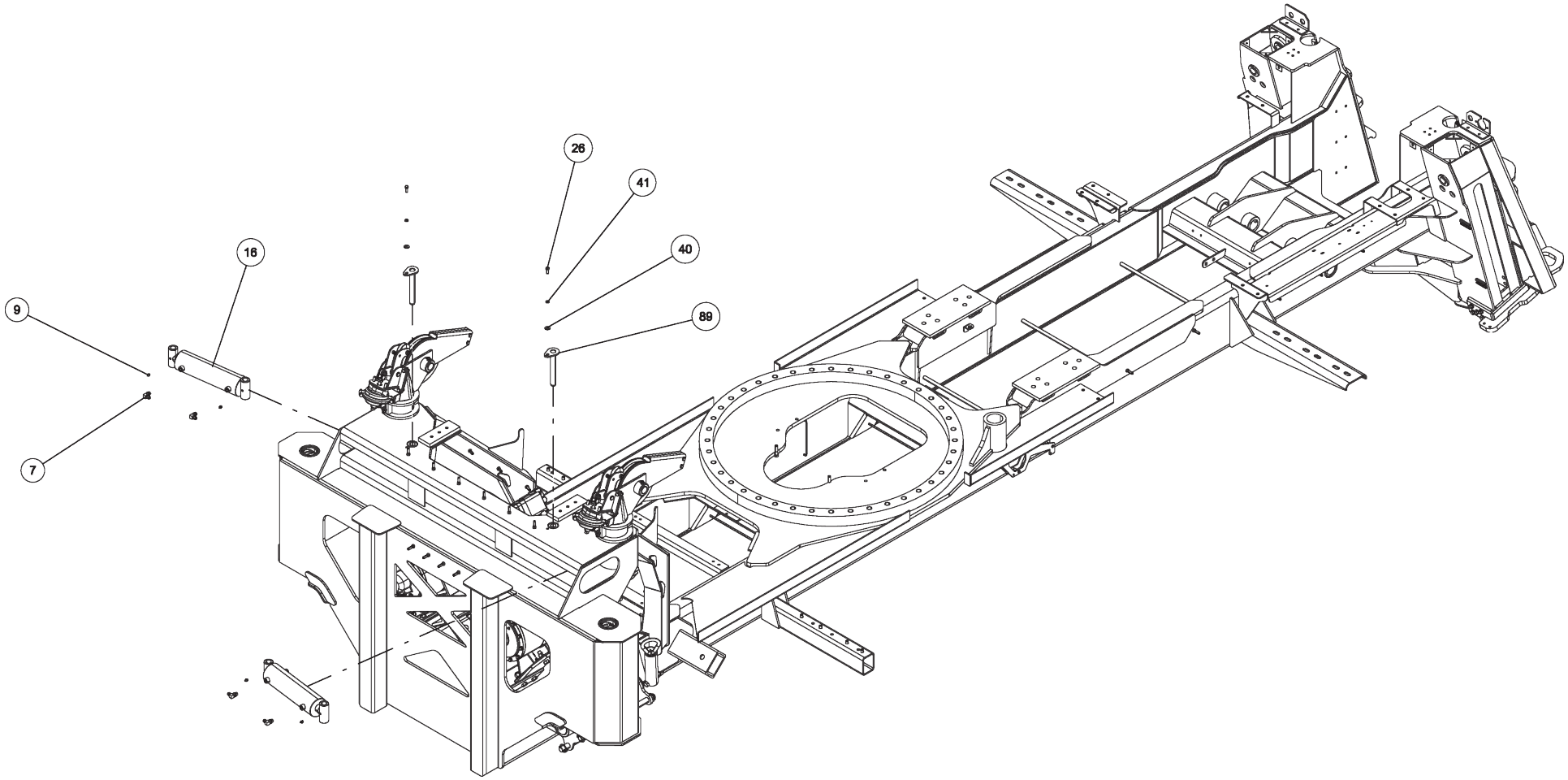

09009470 SUBFRAME ASSEMBLY, 1140 RXP KB (cont'd)

ITEM	PART NUMBER	DESCRIPTION	QTY
	09009470	SUBFRAME ASSEMBLY 1140 RXP KB	
1	0300041	CONNECTOR, 8MJ-8MB	4
2	0300108	SNAP RING, 2.5 5100-250	2
3	0300113	GREASE FITTING, 1/4-28 STR	5
4	0300229	FITTING, ELB 8MJ-8MP90	1
5	0301368	ADAPTER, 16MB-12MJ	1
6	0301470	FITTING, 90ELB 6MJ-8MB90	3
7	0301620	FITTING, HYD. 6MJ - 6MB90	4
8	0301696	FITTING, ELB 90 DEG 6MJ-6FJX90	2
9	0301895	GREASE FITTING, 1/8 STR PTF	7
10	0302065	FITTING, 6-FJ CAP	1
11	0302170	FITTING, SWV 90 DEG BENT	2
12	0302474	PIN, LINCH 3/16	8
13	0302538	BUSHING - U/L	2
14	0302575	FITTING-BULKHEAD RUN TEE	2
15	0302727	FITTING, HYD CONN	3
16	0306746	CYL HYD - FOLD	2
17	0307061	WINCH-35K dp 2-SP N.DRUM W/TEN	2
18	0307345	CONNECTOR, 16FJ-12MJ	1
19	0310406	VALVE, SHUTTLE LS10-30-8T-N	1
20	0310432	FITTING - ADAPTER 16MJ-20MB	2
21	0312570	BEARING - ROTATOR 1130/1140	1
22	0312575	BOOM PIVOT BRKT-MACHINED	2
23	0400070	SCREW, 1/4-20X1 HHC GR5	8
24	0400078	SCREW, 1/4-20X2 HHC GR5	2
25	0400109	SCREW, 5/16-18X1 HHC GR5	4
26	0400126	SCREW, 3/8-16X1 HHC GR5	4
27	0400206	SCREW, 1/2-13X5 HHC GR5	2
28	0400237	SCREW, 1/2-13X4 HHC GR5	2
29	0400262	SCREW, 5/8-11X2-1/2 HHC GR8	32
30	0400286	SCREW, 3/4-10X2-3/4 HHC GR8	12
31	0400336	SCREW, 1-8X3 HHC GR8	40

ITEM	PART NUMBER	DESCRIPTION	QTY
32	0400367	NUT, 1/4-20 LOK	2
33	0400379	NUT, 5/16-18 SPR J	8
34	0400408	NUT, 1/2-13 LOK	6
35	0400426	NUT, 5/8-11 LOK GR8	32
36	0400431	NUT, 3/4-10 LOK GR8	12
37	0400451	WASHER, 1/4	2
38	0400452	LKWASHER, 1/4	8
39	0400467	WASHER, SAE 1/2" HARDENED PL	2
40	0400480	WASHER, 3/8	4
41	0400482	LKWASHER, 3/8	4
42	0400491	LKWASHER, 1/2	10
43	0400497	WASHER, 1/2 GR8	2
44	0400503	WASHER, 5/8 GR8	32
45	0400522	WASHER, 1-1/16X2X1/8 TH YZ	40
46	0400980	SCREW, 3/8-16X1 FHS	12
47	0402032	SCREW, 5/16-18X1 HHC SS	4
48	0402043	SCREW, 3/8-16X1-1/4 HHC SS	16
49	0402110	WASHER, 1/4 SS	4
50	0402118	LKWASHER, 5/16 SS	4
51	0402121	LKWASHER, 3/8 SS	16
52	07002416	PIN, U/L LIFT CYLINDER BASE	2
53	07002417	COVER, LEFT CHAIN BOX	1
54	07002418	COVER, RIGHT CAHIN BOX	1
55	07002692	FLOOR SHEET, MID CENTER COVER	1
56	07002693	FLOOR SHEET, LEFT MID DECK	1
57	07002696	FLOOR SHEET, RIGHT MID DECK	1
58	07002697	FLOOR SHEET, LEFT REAR DECK	1
59	07002698	FLOOR SHEET, RIGHT REAR DECK	1
60	07002699	CHANNEL, VALVE COVER	1
61	07008501	PLATE, FRONT HYD COVER	1
62	07030626	PLATE - SPACER	4
63	0715947	ANGLE, WINCH MTG	2

ITEM	PART NUMBER	DESCRIPTION	QTY
64	0715948	ANGLE, WINCH MTG	2
65	0715949	ANGLE, WINCH MTG	2
66	0715950	ANGLE, WINCH MTG	2
67	0717763	PIN, FLEET SHEAVE	2
68	0717843	PIN, CABLE RETAINER	4
69	0722002	PLATE - REAR O/R COVER	2
70	0724476	PAD - NYLATRON - BBOM GUIDE	2
71	0725440	SHIM, WINCH, 35K DP	8
72	08004865	SUBFRAME WLMT - 1140 RXP KNEEB	1
73	0806727	PIN - PIVOT WLD'T	2
74	0807433	SWING LIMIT ANGLE WELDMENT	1
75	09000229	PIVOT MTG HOUSE LOCK ASSY	2
76	09002243	VALVE ASSY, 1150 KNEE MAIN	1
77	09002244	VALVE ASSY, 1150 KNEE BOOM U/L	1
78	09002246	VALVE ASSY, PRESSURE REDUCING	1
79	09009468	O/R CONTR VALVE KIT	1
80	0906572	KIT-WINCH CABLE STOW	2
81	0908055	REVERSING SHEAVE SUB-ASSEMBLY	2
82	0908062	CABLE SHEAVE & TENSIONER ASSY	2
83	0908432	ROTATOR PINLOCK ASSY	1
84	0911959	KIT, DRING PARTS W/SPACER WASH	4
85	24679012	LH LEG ASSEMBLY (USA)	1
86	24679013	RH LEG ASSEMBLY (USA)	1
87	25559013	RESERVOIR ASSEMBLY SPO	1
88	26687634	THRUST WASHER	2
89	805352500	PIN WELD'T UPPER TILT CY	4
90	9010520	FITTING-ELBOW 1/4T-1/4NPT	2
91	9041402	1/2 NC X 1 1/4 HHCS PLT GR8	10
92	HA293	FITTING-ADPTR SWV RUN	1

09009470 SUBFRAME ASSEMBLY, 1140 RXP KB (cont'd)

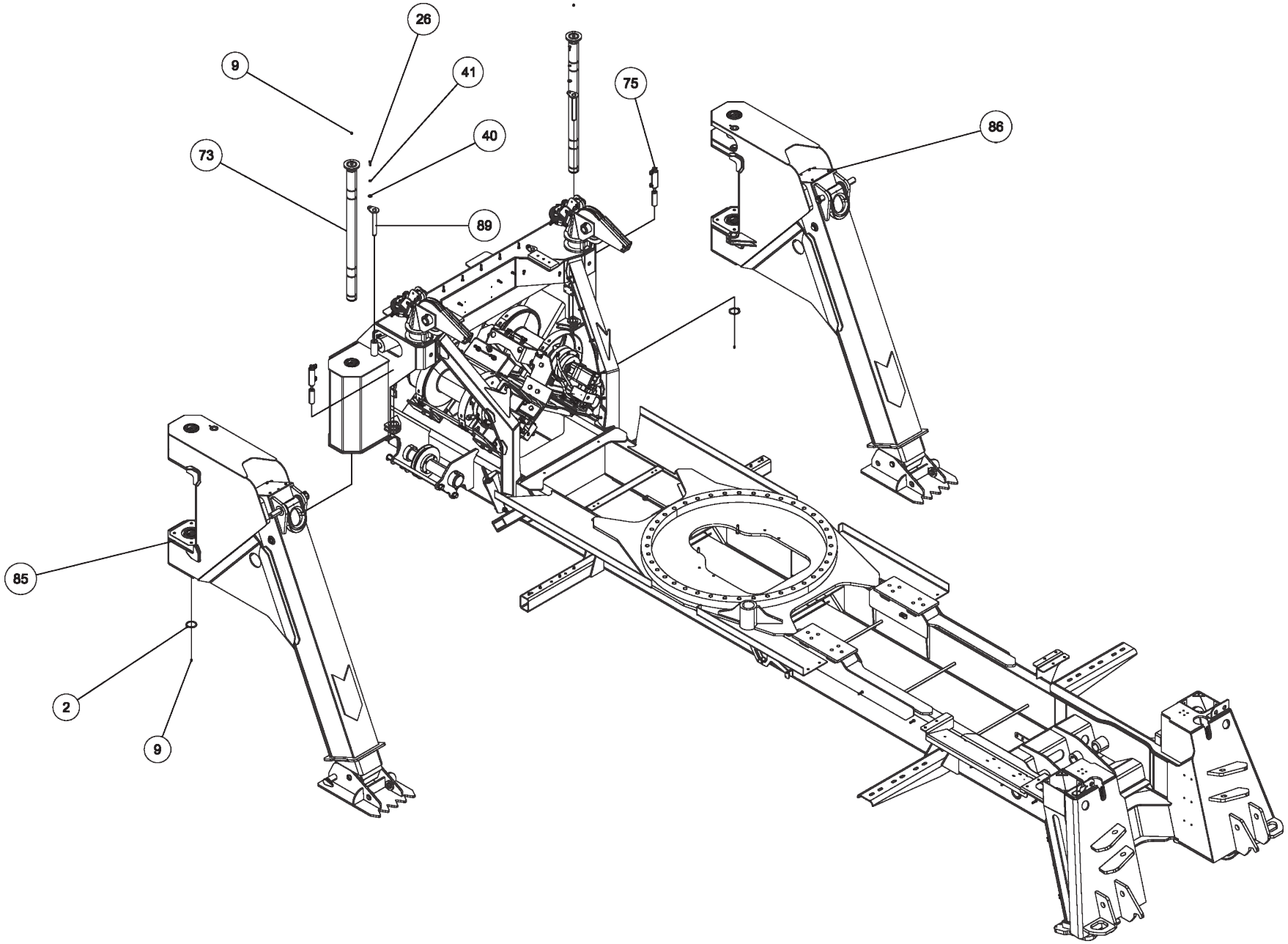

09009470 SUBFRAME ASSEMBLY, 1140 RXP KB (cont'd)

ITEM	PART NUMBER	DESCRIPTION	QTY
	09009470	SUBFRAME ASSEMBLY 1140 RXP KB	
1	0300041	CONNECTOR, 8MJ-8MB	4
2	0300108	SNAP RING, 2.5 5100-250	2
3	0300113	GREASE FITTING, 1/4-28 STR	5
4	0300229	FITTING, ELB 8MJ-8MP90	1
5	0301368	ADAPTER, 16MB-12MJ	1
6	0301470	FITTING, 90ELB 6MJ-8MB90	3
7	0301620	FITTING, HYD. 6MJ - 6MB90	4
8	0301696	FITTING, ELB 90 DEG 6MJ-6FJX90	2
9	0301895	GREASE FITTING, 1/8 STR PTF	7
10	0302065	FITTING, 6-FJ CAP	1
11	0302170	FITTING, SWV 90 DEG BENT	2
12	0302474	PIN, LINCH 3/16	8
13	0302538	BUSHING - U/L	2
14	0302575	FITTING-BULKHEAD RUN TEE	2
15	0302727	FITTING, HYD CONN	3
16	0306746	CYL HYD - FOLD	2
17	0307061	WINCH-35K dp 2-SP N.DRUM W/TEN	2
18	0307345	CONNECTOR, 16FJ-12MJ	1
19	0310406	VALVE, SHUTTLE LS10-30-8T-N	1
20	0310432	FITTING - ADAPTER 16MJ-20MB	2
21	0312570	BEARING - ROTATOR 1130/1140	1
22	0312575	BOOM PIVOT BRKT-MACHINED	2
23	0400070	SCREW, 1/4-20X1 HHC GR5	8
24	0400078	SCREW, 1/4-20X2 HHC GR5	2
25	0400109	SCREW, 5/16-18X1 HHC GR5	4
26	0400126	SCREW, 3/8-16X1 HHC GR5	4
27	0400206	SCREW, 1/2-13X5 HHC GR5	2
28	0400237	SCREW, 1/2-13X4 HHC GR5	2
29	0400262	SCREW, 5/8-11X2-1/2 HHC GR8	32
30	0400286	SCREW, 3/4-10X2-3/4 HHC GR8	12
31	0400336	SCREW, 1-8X3 HHC GR8	40

ITEM	PART NUMBER	DESCRIPTION	QTY
32	0400367	NUT, 1/4-20 LOK	2
33	0400379	NUT, 5/16-18 SPR J	8
34	0400408	NUT, 1/2-13 LOK	6
35	0400426	NUT, 5/8-11 LOK GR8	32
36	0400431	NUT, 3/4-10 LOK GR8	12
37	0400451	WASHER, 1/4	2
38	0400452	LKWASHER, 1/4	8
39	0400467	WASHER, SAE 1/2" HARDENED PL	2
40	0400480	WASHER, 3/8	4
41	0400482	LKWASHER, 3/8	4
42	0400491	LKWASHER, 1/2	10
43	0400497	WASHER, 1/2 GR8	2
44	0400503	WASHER, 5/8 GR8	32
45	0400522	WASHER, 1-1/16X2X1/8 TH YZ	40
46	0400980	SCREW, 3/8-16X1 FHS	12
47	0402032	SCREW, 5/16-18X1 HHC SS	4
48	0402043	SCREW, 3/8-16X1-1/4 HHC SS	16
49	0402110	WASHER, 1/4 SS	4
50	0402118	LKWASHER, 5/16 SS	4
51	0402121	LKWASHER, 3/8 SS	16
52	07002416	PIN, U/L LIFT CYLINDER BASE	2
53	07002417	COVER, LEFT CHAIN BOX	1
54	07002418	COVER, RIGHT CAHIN BOX	1
55	07002692	FLOOR SHEET, MID CENTER COVER	1
56	07002693	FLOOR SHEET, LEFT MID DECK	1
57	07002696	FLOOR SHEET, RIGHT MID DECK	1
58	07002697	FLOOR SHEET, LEFT REAR DECK	1
59	07002698	FLOOR SHEET, RIGHT REAR DECK	1
60	07002699	CHANNEL, VALVE COVER	1
61	07008501	PLATE, FRONT HYD COVER	1
62	07030626	PLATE - SPACER	4
63	0715947	ANGLE, WINCH MTG	2

ITEM	PART NUMBER	DESCRIPTION	QTY
64	0715948	ANGLE, WINCH MTG	2
65	0715949	ANGLE, WINCH MTG	2
66	0715950	ANGLE, WINCH MTG	2
67	0717763	PIN, FLEET SHEAVE	2
68	0717843	PIN, CABLE RETAINER	4
69	0722002	PLATE - REAR O/R COVER	2
70	0724476	PAD - NYLATRON - BBOM GUIDE	2
71	0725440	SHIM, WINCH, 35K DP	8
72	08004865	SUBFRAME WLMT - 1140 RXP KNEEB	1
73	0806727	PIN - PIVOT WLD'T	2
74	0807433	SWING LIMIT ANGLE WELDMENT	1
75	09000229	PIVOT MTG HOUSE LOCK ASSY	2
76	09002243	VALVE ASSY, 1150 KNEE MAIN	1
77	09002244	VALVE ASSY, 1150 KNEE BOOM U/L	1
78	09002246	VALVE ASSY, PRESSURE REDUCING	1
79	09009468	O/R CONTR VALVE KIT	1
80	0906572	KIT-WINCH CABLE STOW	2
81	0908055	REVERSING SHEAVE SUB-ASSEMBLY	2
82	0908062	CABLE SHEAVE & TENSIONER ASSY	2
83	0908432	ROTATOR PINLOCK ASSY	1
84	0911959	KIT, DRING PARTS W/SPACER WASH	4
85	24679012	LH LEG ASSEMBLY (USA)	1
86	24679013	RH LEG ASSEMBLY (USA)	1
87	25559013	RESERVOIR ASSEMBLY SPO	1
88	26687634	THRUST WASHER	2
89	805352500	PIN WELD'T UPPER TILT CY	4
90	9010520	FITTING-ELBOW 1/4T-1/4NPT	2
91	9041402	1/2 NC X 1 1/4 HHCS PLT GR8	10
92	HA293	FITTING-ADPTR SWV RUN	1

09009470 SUBFRAME ASSEMBLY, 1140 RXP KB (cont'd)

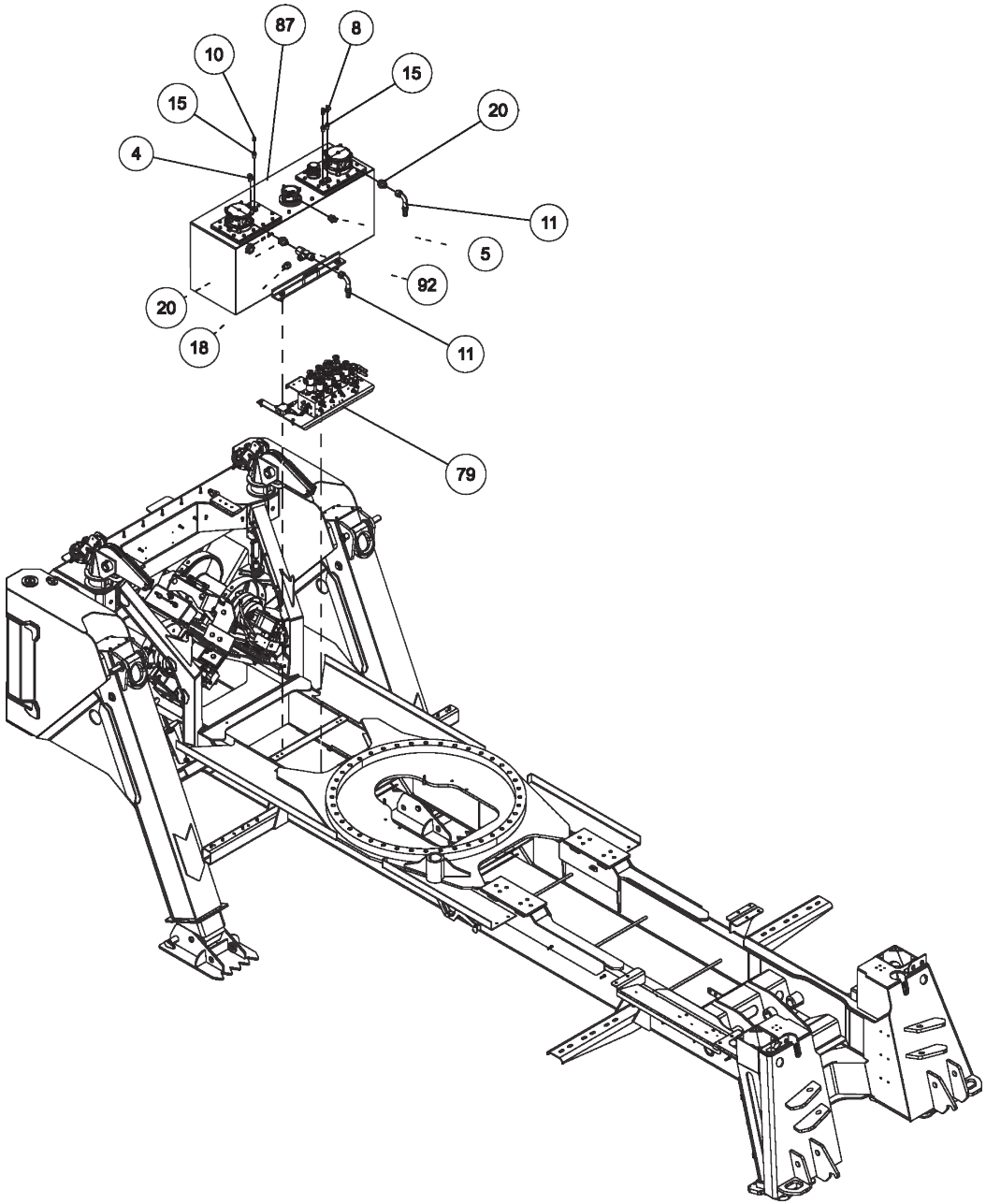

09009470 SUBFRAME ASSEMBLY, 1140 RXP KB (cont'd)

ITEM	PART NUMBER	DESCRIPTION	QTY
	09009470	SUBFRAME ASSEMBLY 1140 RXP KB	
1	0300041	CONNECTOR, 8MJ-8MB	4
2	0300108	SNAP RING, 2.5 5100-250	2
3	0300113	GREASE FITTING, 1/4-28 STR	5
4	0300229	FITTING, ELB 8MJ-8MP90	1
5	0301368	ADAPTER, 16MB-12MJ	1
6	0301470	FITTING, 90ELB 6MJ-8MB90	3
7	0301620	FITTING, HYD. 6MJ - 6MB90	4
8	0301696	FITTING, ELB 90 DEG 6MJ-6FJX90	2
9	0301895	GREASE FITTING, 1/8 STR PTF	7
10	0302065	FITTING, 6-FJ CAP	1
11	0302170	FITTING, SWV 90 DEG BENT	2
12	0302474	PIN, LINCH 3/16	8
13	0302538	BUSHING - U/L	2
14	0302575	FITTING-BULKHEAD RUN TEE	2
15	0302727	FITTING, HYD CONN	3
16	0306746	CYL HYD - FOLD	2
17	0307061	WINCH-35K dp 2-SP N.DRUM W/TEN	2
18	0307345	CONNECTOR, 16FJ-12MJ	1
19	0310406	VALVE, SHUTTLE LS10-30-8T-N	1
20	0310432	FITTING - ADAPTER 16MJ-20MB	2
21	0312570	BEARING - ROTATOR 1130/1140	1
22	0312575	BOOM PIVOT BRKT-MACHINED	2
23	0400070	SCREW, 1/4-20X1 HHC GR5	8
24	0400078	SCREW, 1/4-20X2 HHC GR5	2
25	0400109	SCREW, 5/16-18X1 HHC GR5	4
26	0400126	SCREW, 3/8-16X1 HHC GR5	4
27	0400206	SCREW, 1/2-13X5 HHC GR5	2
28	0400237	SCREW, 1/2-13X4 HHC GR5	2
29	0400262	SCREW, 5/8-11X2-1/2 HHC GR8	32
30	0400286	SCREW, 3/4-10X2-3/4 HHC GR8	12
31	0400336	SCREW, 1-8X3 HHC GR8	40

ITEM	PART NUMBER	DESCRIPTION	QTY
32	0400367	NUT, 1/4-20 LOK	2
33	0400379	NUT, 5/16-18 SPR J	8
34	0400408	NUT, 1/2-13 LOK	6
35	0400426	NUT, 5/8-11 LOK GR8	32
36	0400431	NUT, 3/4-10 LOK GR8	12
37	0400451	WASHER, 1/4	2
38	0400452	LKWASHER, 1/4	8
39	0400467	WASHER, SAE 1/2" HARDENED PL	2
40	0400480	WASHER, 3/8	4
41	0400482	LKWASHER, 3/8	4
42	0400491	LKWASHER, 1/2	10
43	0400497	WASHER, 1/2 GR8	2
44	0400503	WASHER, 5/8 GR8	32
45	0400522	WASHER, 1-1/16X2X1/8 TH YZ	40
46	0400980	SCREW, 3/8-16X1 FHS	12
47	0402032	SCREW, 5/16-18X1 HHC SS	4
48	0402043	SCREW, 3/8-16X1-1/4 HHC SS	16
49	0402110	WASHER, 1/4 SS	4
50	0402118	LKWASHER, 5/16 SS	4
51	0402121	LKWASHER, 3/8 SS	16
52	07002416	PIN, U/L LIFT CYLINDER BASE	2
53	07002417	COVER, LEFT CHAIN BOX	1
54	07002418	COVER, RIGHT CAHIN BOX	1
55	07002692	FLOOR SHEET, MID CENTER COVER	1
56	07002693	FLOOR SHEET, LEFT MID DECK	1
57	07002696	FLOOR SHEET, RIGHT MID DECK	1
58	07002697	FLOOR SHEET, LEFT REAR DECK	1
59	07002698	FLOOR SHEET, RIGHT REAR DECK	1
60	07002699	CHANNEL, VALVE COVER	1
61	07008501	PLATE, FRONT HYD COVER	1
62	07030626	PLATE - SPACER	4
63	0715947	ANGLE, WINCH MTG	2

ITEM	PART NUMBER	DESCRIPTION	QTY
64	0715948	ANGLE, WINCH MTG	2
65	0715949	ANGLE, WINCH MTG	2
66	0715950	ANGLE, WINCH MTG	2
67	0717763	PIN, FLEET SHEAVE	2
68	0717843	PIN, CABLE RETAINER	4
69	0722002	PLATE - REAR O/R COVER	2
70	0724476	PAD - NYLATRON - BBOM GUIDE	2
71	0725440	SHIM, WINCH, 35K DP	8
72	08004865	SUBFRAME WLMT - 1140 RXP KNEEB	1
73	0806727	PIN - PIVOT WLD'T	2
74	0807433	SWING LIMIT ANGLE WELDMENT	1
75	09000229	PIVOT MTG HOUSE LOCK ASSY	2
76	09002243	VALVE ASSY, 1150 KNEE MAIN	1
77	09002244	VALVE ASSY, 1150 KNEE BOOM U/L	1
78	09002246	VALVE ASSY, PRESSURE REDUCING	1
79	09009468	O/R CONTR VALVE KIT	1
80	0906572	KIT-WINCH CABLE STOW	2
81	0908055	REVERSING SHEAVE SUB-ASSEMBLY	2
82	0908062	CABLE SHEAVE & TENSIONER ASSY	2
83	0908432	ROTATOR PINLOCK ASSY	1
84	0911959	KIT, DRING PARTS W/SPACER WASH	4
85	24679012	LH LEG ASSEMBLY (USA)	1
86	24679013	RH LEG ASSEMBLY (USA)	1
87	25559013	RESERVOIR ASSEMBLY SPO	1
88	26687634	THRUST WASHER	2
89	805352500	PIN WELD'T UPPER TILT CY	4
90	9010520	FITTING-ELBOW 1/4T-1/4NPT	2
91	9041402	1/2 NC X 1 1/4 HHCS PLT GR8	10
92	HA293	FITTING-ADPTR SWV RUN	1

09009470 SUBFRAME ASSEMBLY, 1140 RXP KB (cont'd)

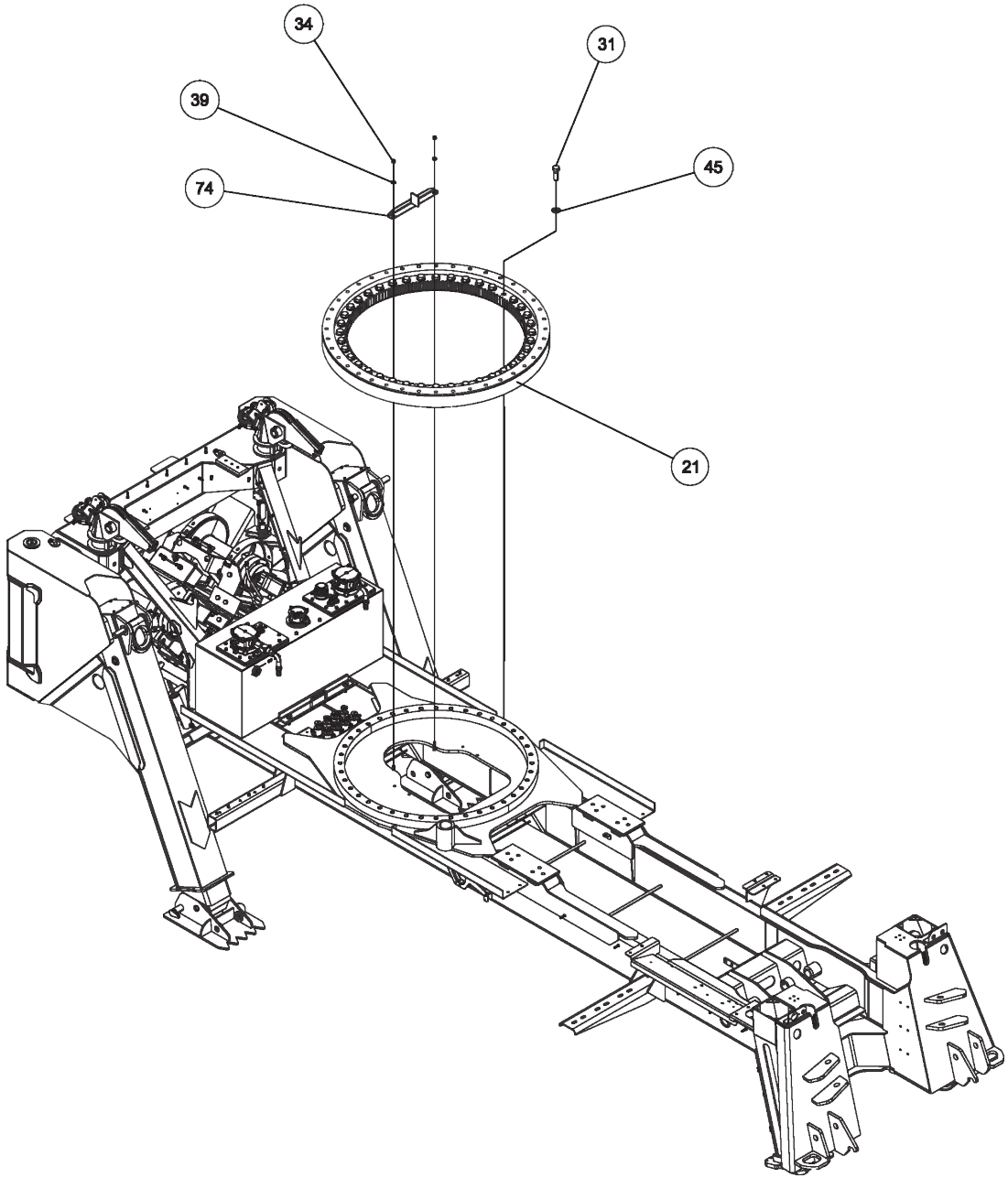

09009470 SUBFRAME ASSEMBLY, 1140 RXP KB (cont'd)

ITEM	PART NUMBER	DESCRIPTION	QTY
	09009470	SUBFRAME ASSEMBLY 1140 RXP KB	
1	0300041	CONNECTOR, 8MJ-8MB	4
2	0300108	SNAP RING, 2.5 5100-250	2
3	0300113	GREASE FITTING, 1/4-28 STR	5
4	0300229	FITTING, ELB 8MJ-8MP90	1
5	0301368	ADAPTER, 16MB-12MJ	1
6	0301470	FITTING, 90ELB 6MJ-8MB90	3
7	0301620	FITTING, HYD. 6MJ - 6MB90	4
8	0301696	FITTING, ELB 90 DEG 6MJ-6FJX90	2
9	0301895	GREASE FITTING, 1/8 STR PTF	7
10	0302065	FITTING, 6-FJ CAP	1
11	0302170	FITTING, SWV 90 DEG BENT	2
12	0302474	PIN, LINCH 3/16	8
13	0302538	BUSHING - U/L	2
14	0302575	FITTING-BULKHEAD RUN TEE	2
15	0302727	FITTING, HYD CONN	3
16	0306746	CYL HYD - FOLD	2
17	0307061	WINCH-35K dp 2-SP N.DRUM W/TEN	2
18	0307345	CONNECTOR, 16FJ-12MJ	1
19	0310406	VALVE, SHUTTLE LS10-30-8T-N	1
20	0310432	FITTING - ADAPTER 16MJ-20MB	2
21	0312570	BEARING - ROTATOR 1130/1140	1
22	0312575	BOOM PIVOT BRKT-MACHINED	2
23	0400070	SCREW, 1/4-20X1 HHC GR5	8
24	0400078	SCREW, 1/4-20X2 HHC GR5	2
25	0400109	SCREW, 5/16-18X1 HHC GR5	4
26	0400126	SCREW, 3/8-16X1 HHC GR5	4
27	0400206	SCREW, 1/2-13X5 HHC GR5	2
28	0400237	SCREW, 1/2-13X4 HHC GR5	2
29	0400262	SCREW, 5/8-11X2-1/2 HHC GR8	32
30	0400286	SCREW, 3/4-10X2-3/4 HHC GR8	12
31	0400336	SCREW, 1-8X3 HHC GR8	40

ITEM	PART NUMBER	DESCRIPTION	QTY
32	0400367	NUT, 1/4-20 LOK	2
33	0400379	NUT, 5/16-18 SPR J	8
34	0400408	NUT, 1/2-13 LOK	6
35	0400426	NUT, 5/8-11 LOK GR8	32
36	0400431	NUT, 3/4-10 LOK GR8	12
37	0400451	WASHER, 1/4	2
38	0400452	LKWASHER, 1/4	8
39	0400467	WASHER, SAE 1/2" HARDENED PL	2
40	0400480	WASHER, 3/8	4
41	0400482	LKWASHER, 3/8	4
42	0400491	LKWASHER, 1/2	10
43	0400497	WASHER, 1/2 GR8	2
44	0400503	WASHER, 5/8 GR8	32
45	0400522	WASHER, 1-1/16X2X1/8 TH YZ	40
46	0400980	SCREW, 3/8-16X1 FHS	12
47	0402032	SCREW, 5/16-18X1 HHC SS	4
48	0402043	SCREW, 3/8-16X1-1/4 HHC SS	16
49	0402110	WASHER, 1/4 SS	4
50	0402118	LKWASHER, 5/16 SS	4
51	0402121	LKWASHER, 3/8 SS	16
52	07002416	PIN, U/L LIFT CYLINDER BASE	2
53	07002417	COVER, LEFT CHAIN BOX	1
54	07002418	COVER, RIGHT CAHIN BOX	1
55	07002692	FLOOR SHEET, MID CENTER COVER	1
56	07002693	FLOOR SHEET, LEFT MID DECK	1
57	07002696	FLOOR SHEET, RIGHT MID DECK	1
58	07002697	FLOOR SHEET, LEFT REAR DECK	1
59	07002698	FLOOR SHEET, RIGHT REAR DECK	1
60	07002699	CHANNEL, VALVE COVER	1
61	07008501	PLATE, FRONT HYD COVER	1
62	07030626	PLATE - SPACER	4
63	0715947	ANGLE, WINCH MTG	2

ITEM	PART NUMBER	DESCRIPTION	QTY
64	0715948	ANGLE, WINCH MTG	2
65	0715949	ANGLE, WINCH MTG	2
66	0715950	ANGLE, WINCH MTG	2
67	0717763	PIN, FLEET SHEAVE	2
68	0717843	PIN, CABLE RETAINER	4
69	0722002	PLATE - REAR O/R COVER	2
70	0724476	PAD - NYLATRON - BBOM GUIDE	2
71	0725440	SHIM, WINCH, 35K DP	8
72	08004865	SUBFRAME WLMT - 1140 RXP KNEEB	1
73	0806727	PIN - PIVOT WLD'T	2
74	0807433	SWING LIMIT ANGLE WELDMENT	1
75	09000229	PIVOT MTG HOUSE LOCK ASSY	2
76	09002243	VALVE ASSY, 1150 KNEE MAIN	1
77	09002244	VALVE ASSY, 1150 KNEE BOOM U/L	1
78	09002246	VALVE ASSY, PRESSURE REDUCING	1
79	09009468	O/R CONTR VALVE KIT	1
80	0906572	KIT-WINCH CABLE STOW	2
81	0908055	REVERSING SHEAVE SUB-ASSEMBLY	2
82	0908062	CABLE SHEAVE & TENSIONER ASSY	2
83	0908432	ROTATOR PINLOCK ASSY	1
84	0911959	KIT, DRING PARTS W/SPACER WASH	4
85	24679012	LH LEG ASSEMBLY (USA)	1
86	24679013	RH LEG ASSEMBLY (USA)	1
87	25559013	RESERVOIR ASSEMBLY SPO	1
88	26687634	THRUST WASHER	2
89	805352500	PIN WELD'T UPPER TILT CY	4
90	9010520	FITTING-ELBOW 1/4T-1/4NPT	2
91	9041402	1/2 NC X 1 1/4 HHCS PLT GR8	10
92	HA293	FITTING-ADPTR SWV RUN	1

09009470 SUBFRAME ASSEMBLY, 1140 RXP KB (cont'd)

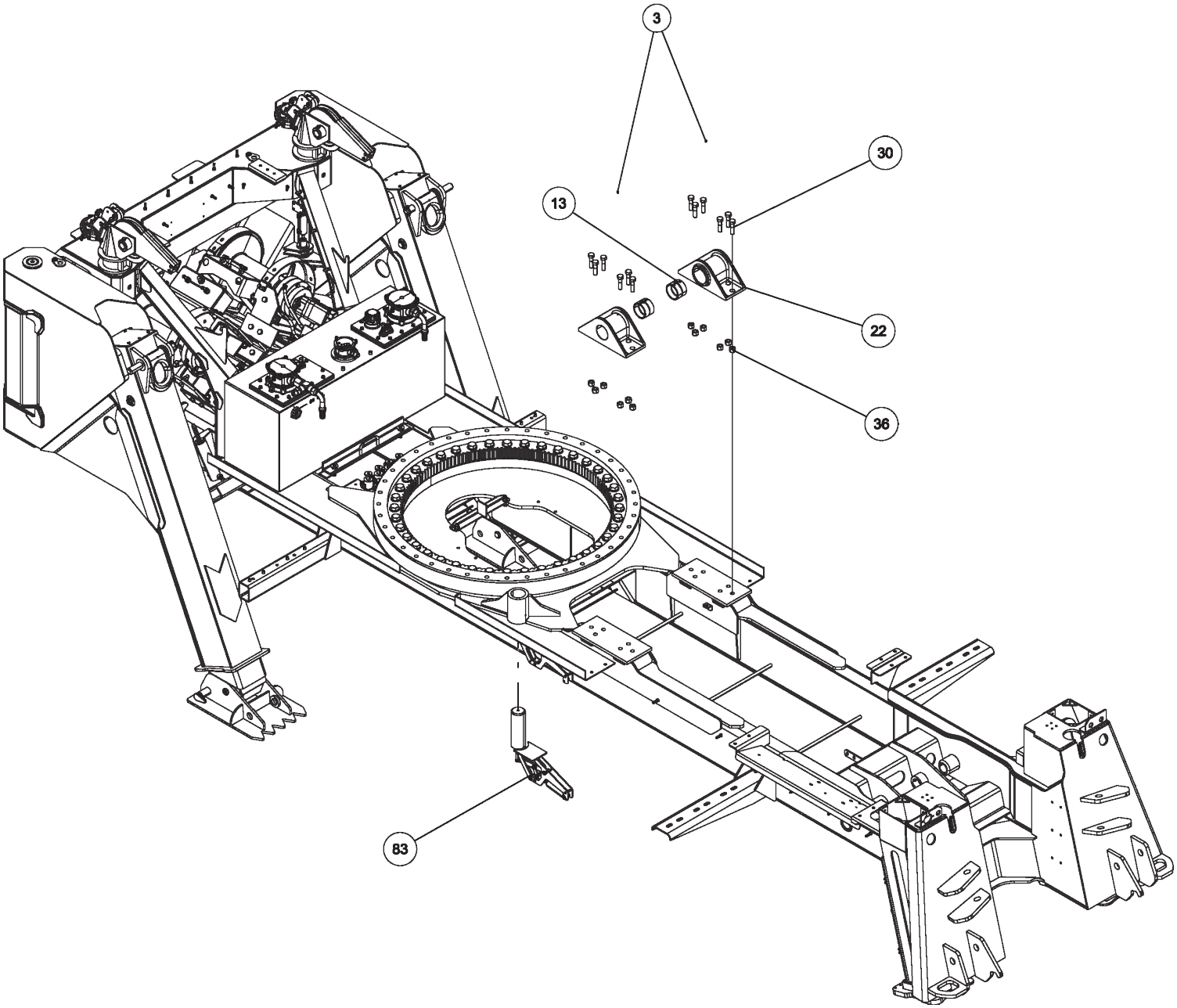

09009470 SUBFRAME ASSEMBLY, 1140 RXP KB (cont'd)

ITEM	PART NUMBER	DESCRIPTION	QTY
	09009470	SUBFRAME ASSEMBLY 1140 RXP KB	
1	0300041	CONNECTOR, 8MJ-8MB	4
2	0300108	SNAP RING, 2.5 5100-250	2
3	0300113	GREASE FITTING, 1/4-28 STR	5
4	0300229	FITTING, ELB 8MJ-8MP90	1
5	0301368	ADAPTER, 16MB-12MJ	1
6	0301470	FITTING, 90ELB 6MJ-8MB90	3
7	0301620	FITTING, HYD. 6MJ - 6MB90	4
8	0301696	FITTING, ELB 90 DEG 6MJ-6FJX90	2
9	0301895	GREASE FITTING, 1/8 STR PTF	7
10	0302065	FITTING, 6-FJ CAP	1
11	0302170	FITTING, SWV 90 DEG BENT	2
12	0302474	PIN, LINCH 3/16	8
13	0302538	BUSHING - U/L	2
14	0302575	FITTING-BULKHEAD RUN TEE	2
15	0302727	FITTING, HYD CONN	3
16	0306746	CYL HYD - FOLD	2
17	0307061	WINCH-35K dp 2-SP N.DRUM W/TEN	2
18	0307345	CONNECTOR, 16FJ-12MJ	1
19	0310406	VALVE, SHUTTLE LS10-30-8T-N	1
20	0310432	FITTING - ADAPTER 16MJ-20MB	2
21	0312570	BEARING - ROTATOR 1130/1140	1
22	0312575	BOOM PIVOT BRKT-MACHINED	2
23	0400070	SCREW, 1/4-20X1 HHC GR5	8
24	0400078	SCREW, 1/4-20X2 HHC GR5	2
25	0400109	SCREW, 5/16-18X1 HHC GR5	4
26	0400126	SCREW, 3/8-16X1 HHC GR5	4
27	0400206	SCREW, 1/2-13X5 HHC GR5	2
28	0400237	SCREW, 1/2-13X4 HHC GR5	2
29	0400262	SCREW, 5/8-11X2-1/2 HHC GR8	32
30	0400286	SCREW, 3/4-10X2-3/4 HHC GR8	12
31	0400336	SCREW, 1-8X3 HHC GR8	40

ITEM	PART NUMBER	DESCRIPTION	QTY
32	0400367	NUT, 1/4-20 LOK	2
33	0400379	NUT, 5/16-18 SPR J	8
34	0400408	NUT, 1/2-13 LOK	6
35	0400426	NUT, 5/8-11 LOK GR8	32
36	0400431	NUT, 3/4-10 LOK GR8	12
37	0400451	WASHER, 1/4	2
38	0400452	LKWASHER, 1/4	8
39	0400467	WASHER, SAE 1/2" HARDENED PL	2
40	0400480	WASHER, 3/8	4
41	0400482	LKWASHER, 3/8	4
42	0400491	LKWASHER, 1/2	10
43	0400497	WASHER, 1/2 GR8	2
44	0400503	WASHER, 5/8 GR8	32
45	0400522	WASHER, 1-1/16X2X1/8 TH YZ	40
46	0400980	SCREW, 3/8-16X1 FHS	12
47	0402032	SCREW, 5/16-18X1 HHC SS	4
48	0402043	SCREW, 3/8-16X1-1/4 HHC SS	16
49	0402110	WASHER, 1/4 SS	4
50	0402118	LKWASHER, 5/16 SS	4
51	0402121	LKWASHER, 3/8 SS	16
52	07002416	PIN, U/L LIFT CYLINDER BASE	2
53	07002417	COVER, LEFT CHAIN BOX	1
54	07002418	COVER, RIGHT CAHIN BOX	1
55	07002692	FLOOR SHEET, MID CENTER COVER	1
56	07002693	FLOOR SHEET, LEFT MID DECK	1
57	07002696	FLOOR SHEET, RIGHT MID DECK	1
58	07002697	FLOOR SHEET, LEFT REAR DECK	1
59	07002698	FLOOR SHEET, RIGHT REAR DECK	1
60	07002699	CHANNEL, VALVE COVER	1
61	07008501	PLATE, FRONT HYD COVER	1
62	07030626	PLATE - SPACER	4
63	0715947	ANGLE, WINCH MTG	2

ITEM	PART NUMBER	DESCRIPTION	QTY
64	0715948	ANGLE, WINCH MTG	2
65	0715949	ANGLE, WINCH MTG	2
66	0715950	ANGLE, WINCH MTG	2
67	0717763	PIN, FLEET SHEAVE	2
68	0717843	PIN, CABLE RETAINER	4
69	0722002	PLATE - REAR O/R COVER	2
70	0724476	PAD - NYLATRON - BBOM GUIDE	2
71	0725440	SHIM, WINCH, 35K DP	8
72	08004865	SUBFRAME WLMT - 1140 RXP KNEEB	1
73	0806727	PIN - PIVOT WLD'T	2
74	0807433	SWING LIMIT ANGLE WELDMENT	1
75	09000229	PIVOT MTG HOUSE LOCK ASSY	2
76	09002243	VALVE ASSY, 1150 KNEE MAIN	1
77	09002244	VALVE ASSY, 1150 KNEE BOOM U/L	1
78	09002246	VALVE ASSY, PRESSURE REDUCING	1
79	09009468	O/R CONTR VALVE KIT	1
80	0906572	KIT-WINCH CABLE STOW	2
81	0908055	REVERSING SHEAVE SUB-ASSEMBLY	2
82	0908062	CABLE SHEAVE & TENSIONER ASSY	2
83	0908432	ROTATOR PINLOCK ASSY	1
84	0911959	KIT, DRING PARTS W/SPACER WASH	4
85	24679012	LH LEG ASSEMBLY (USA)	1
86	24679013	RH LEG ASSEMBLY (USA)	1
87	25559013	RESERVOIR ASSEMBLY SPO	1
88	26687634	THRUST WASHER	2
89	805352500	PIN WELD'T UPPER TILT CY	4
90	9010520	FITTING-ELBOW 1/4T-1/4NPT	2
91	9041402	1/2 NC X 1 1/4 HHCS PLT GR8	10
92	HA293	FITTING-ADPTR SWV RUN	1

09009470 SUBFRAME ASSEMBLY, 1140 RXP KB (cont'd)

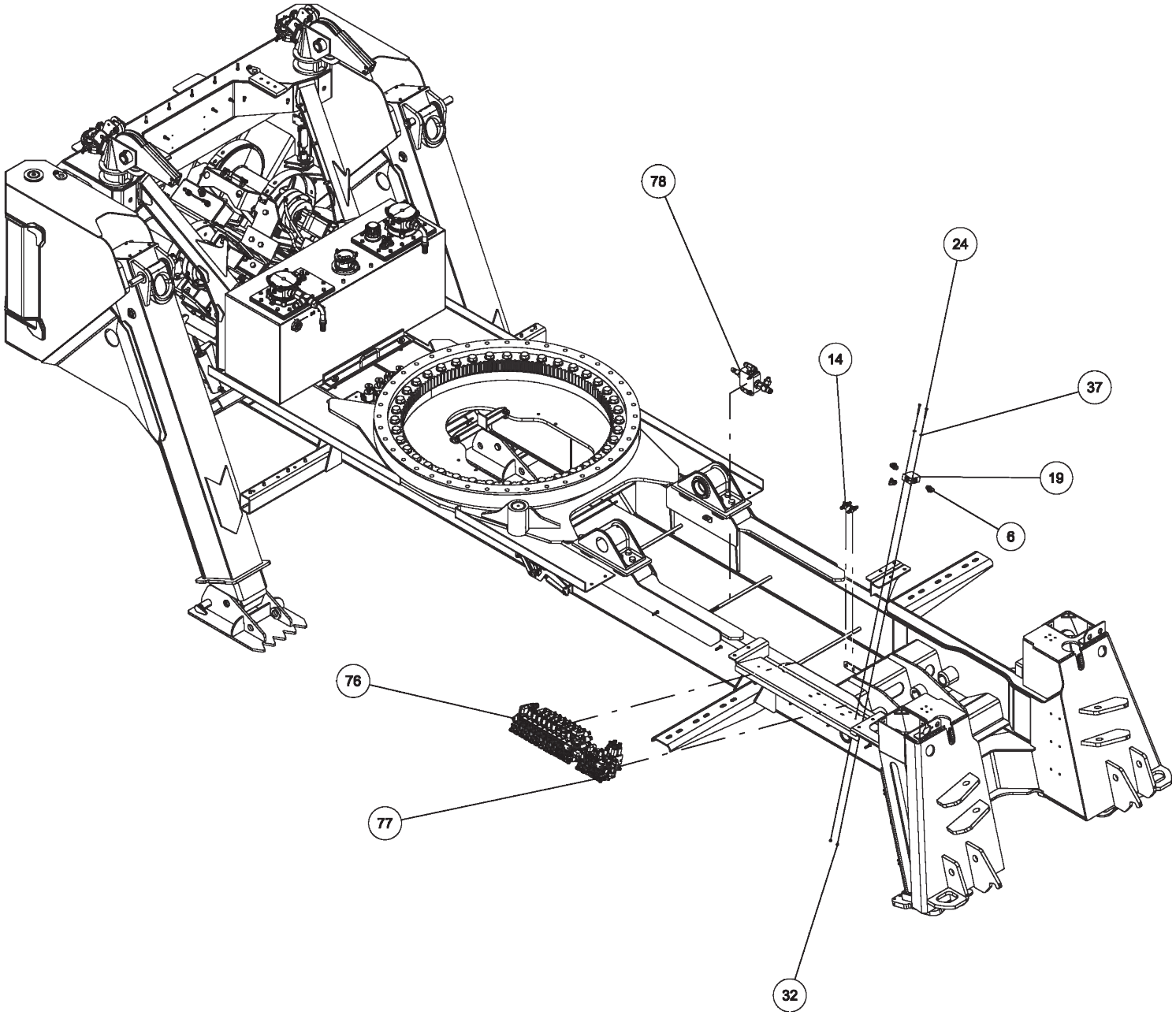

09009470 SUBFRAME ASSEMBLY, 1140 RXP KB (cont'd)

ITEM	PART NUMBER	DESCRIPTION	QTY
	09009470	SUBFRAME ASSEMBLY 1140 RXP KB	
1	0300041	CONNECTOR, 8MJ-8MB	4
2	0300108	SNAP RING, 2.5 5100-250	2
3	0300113	GREASE FITTING, 1/4-28 STR	5
4	0300229	FITTING, ELB 8MJ-8MP90	1
5	0301368	ADAPTER, 16MB-12MJ	1
6	0301470	FITTING, 90ELB 6MJ-8MB90	3
7	0301620	FITTING, HYD. 6MJ - 6MB90	4
8	0301696	FITTING, ELB 90 DEG 6MJ-6FJX90	2
9	0301895	GREASE FITTING, 1/8 STR PTF	7
10	0302065	FITTING, 6-FJ CAP	1
11	0302170	FITTING, SWV 90 DEG BENT	2
12	0302474	PIN, LINCH 3/16	8
13	0302538	BUSHING - U/L	2
14	0302575	FITTING-BULKHEAD RUN TEE	2
15	0302727	FITTING, HYD CONN	3
16	0306746	CYL HYD - FOLD	2
17	0307061	WINCH-35K dp 2-SP N.DRUM W/TEN	2
18	0307345	CONNECTOR, 16FJ-12MJ	1
19	0310406	VALVE, SHUTTLE LS10-30-8T-N	1
20	0310432	FITTING - ADAPTER 16MJ-20MB	2
21	0312570	BEARING - ROTATOR 1130/1140	1
22	0312575	BOOM PIVOT BRKT-MACHINED	2
23	0400070	SCREW, 1/4-20X1 HHC GR5	8
24	0400078	SCREW, 1/4-20X2 HHC GR5	2
25	0400109	SCREW, 5/16-18X1 HHC GR5	4
26	0400126	SCREW, 3/8-16X1 HHC GR5	4
27	0400206	SCREW, 1/2-13X5 HHC GR5	2
28	0400237	SCREW, 1/2-13X4 HHC GR5	2
29	0400262	SCREW, 5/8-11X2-1/2 HHC GR8	32
30	0400286	SCREW, 3/4-10X2-3/4 HHC GR8	12
31	0400336	SCREW, 1-8X3 HHC GR8	40

ITEM	PART NUMBER	DESCRIPTION	QTY
32	0400367	NUT, 1/4-20 LOK	2
33	0400379	NUT, 5/16-18 SPR J	8
34	0400408	NUT, 1/2-13 LOK	6
35	0400426	NUT, 5/8-11 LOK GR8	32
36	0400431	NUT, 3/4-10 LOK GR8	12
37	0400451	WASHER, 1/4	2
38	0400452	LKWASHER, 1/4	8
39	0400467	WASHER, SAE 1/2" HARDENED PL	2
40	0400480	WASHER, 3/8	4
41	0400482	LKWASHER, 3/8	4
42	0400491	LKWASHER, 1/2	10
43	0400497	WASHER, 1/2 GR8	2
44	0400503	WASHER, 5/8 GR8	32
45	0400522	WASHER, 1-1/16X2X1/8 TH YZ	40
46	0400980	SCREW, 3/8-16X1 FHS	12
47	0402032	SCREW, 5/16-18X1 HHC SS	4
48	0402043	SCREW, 3/8-16X1-1/4 HHC SS	16
49	0402110	WASHER, 1/4 SS	4
50	0402118	LKWASHER, 5/16 SS	4
51	0402121	LKWASHER, 3/8 SS	16
52	07002416	PIN, U/L LIFT CYLINDER BASE	2
53	07002417	COVER, LEFT CHAIN BOX	1
54	07002418	COVER, RIGHT CAHIN BOX	1
55	07002692	FLOOR SHEET, MID CENTER COVER	1
56	07002693	FLOOR SHEET, LEFT MID DECK	1
57	07002696	FLOOR SHEET, RIGHT MID DECK	1
58	07002697	FLOOR SHEET, LEFT REAR DECK	1
59	07002698	FLOOR SHEET, RIGHT REAR DECK	1
60	07002699	CHANNEL, VALVE COVER	1
61	07008501	PLATE, FRONT HYD COVER	1
62	07030626	PLATE - SPACER	4
63	0715947	ANGLE, WINCH MTG	2

ITEM	PART NUMBER	DESCRIPTION	QTY
64	0715948	ANGLE, WINCH MTG	2
65	0715949	ANGLE, WINCH MTG	2
66	0715950	ANGLE, WINCH MTG	2
67	0717763	PIN, FLEET SHEAVE	2
68	0717843	PIN, CABLE RETAINER	4
69	0722002	PLATE - REAR O/R COVER	2
70	0724476	PAD - NYLATRON - BBOM GUIDE	2
71	0725440	SHIM, WINCH, 35K DP	8
72	08004865	SUBFRAME WLMT - 1140 RXP KNEEB	1
73	0806727	PIN - PIVOT WLD'T	2
74	0807433	SWING LIMIT ANGLE WELDMENT	1
75	09000229	PIVOT MTG HOUSE LOCK ASSY	2
76	09002243	VALVE ASSY, 1150 KNEE MAIN	1
77	09002244	VALVE ASSY, 1150 KNEE BOOM U/L	1
78	09002246	VALVE ASSY, PRESSURE REDUCING	1
79	09009468	O/R CONTR VALVE KIT	1
80	0906572	KIT-WINCH CABLE STOW	2
81	0908055	REVERSING SHEAVE SUB-ASSEMBLY	2
82	0908062	CABLE SHEAVE & TENSIONER ASSY	2
83	0908432	ROTATOR PINLOCK ASSY	1
84	0911959	KIT, DRING PARTS W/SPACER WASH	4
85	24679012	LH LEG ASSEMBLY (USA)	1
86	24679013	RH LEG ASSEMBLY (USA)	1
87	25559013	RESERVOIR ASSEMBLY SPO	1
88	26687634	THRUST WASHER	2
89	805352500	PIN WELD'T UPPER TILT CY	4
90	9010520	FITTING-ELBOW 1/4T-1/4NPT	2
91	9041402	1/2 NC X 1 1/4 HHCS PLT GR8	10
92	HA293	FITTING-ADPTR SWV RUN	1

09009470 SUBFRAME ASSEMBLY, 1140 RXP KB (cont'd)

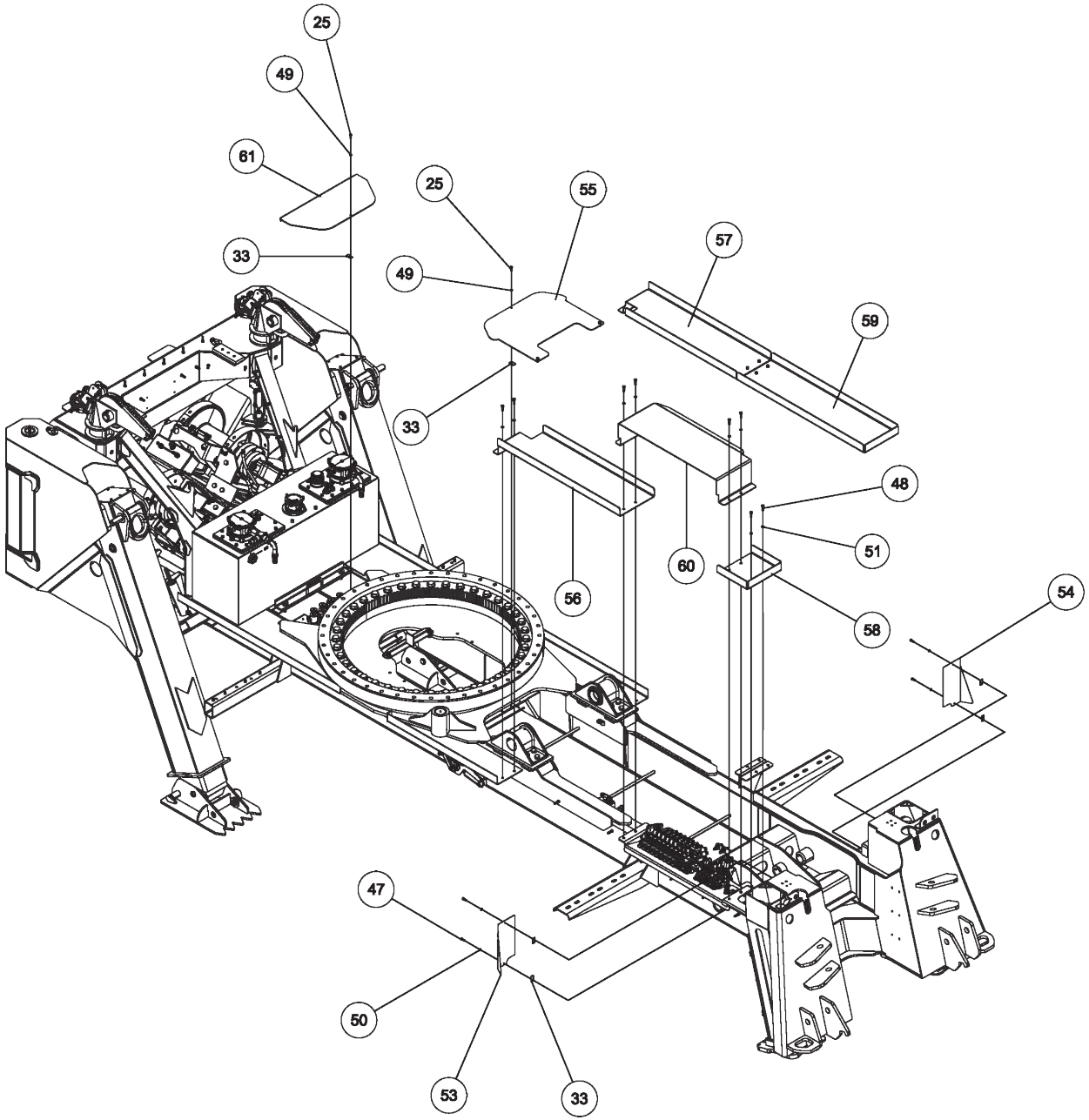

09009470 SUBFRAME ASSEMBLY, 1140 RXP KB (cont'd)

ITEM	PART NUMBER	DESCRIPTION	QTY
	09009470	SUBFRAME ASSEMBLY 1140 RXP KB	
1	0300041	CONNECTOR, 8MJ-8MB	4
2	0300108	SNAP RING, 2.5 5100-250	2
3	0300113	GREASE FITTING, 1/4-28 STR	5
4	0300229	FITTING, ELB 8MJ-8MP90	1
5	0301368	ADAPTER, 16MB-12MJ	1
6	0301470	FITTING, 90ELB 6MJ-8MB90	3
7	0301620	FITTING, HYD. 6MJ - 6MB90	4
8	0301696	FITTING, ELB 90 DEG 6MJ-6FJX90	2
9	0301895	GREASE FITTING, 1/8 STR PTF	7
10	0302065	FITTING, 6-FJ CAP	1
11	0302170	FITTING, SWV 90 DEG BENT	2
12	0302474	PIN, LINCH 3/16	8
13	0302538	BUSHING - U/L	2
14	0302575	FITTING-BULKHEAD RUN TEE	2
15	0302727	FITTING, HYD CONN	3
16	0306746	CYL HYD - FOLD	2
17	0307061	WINCH-35K dp 2-SP N.DRUM W/TEN	2
18	0307345	CONNECTOR, 16FJ-12MJ	1
19	0310406	VALVE, SHUTTLE LS10-30-8T-N	1
20	0310432	FITTING - ADAPTER 16MJ-20MB	2
21	0312570	BEARING - ROTATOR 1130/1140	1
22	0312575	BOOM PIVOT BRKT-MACHINED	2
23	0400070	SCREW, 1/4-20X1 HHC GR5	8
24	0400078	SCREW, 1/4-20X2 HHC GR5	2
25	0400109	SCREW, 5/16-18X1 HHC GR5	4
26	0400126	SCREW, 3/8-16X1 HHC GR5	4
27	0400206	SCREW, 1/2-13X5 HHC GR5	2
28	0400237	SCREW, 1/2-13X4 HHC GR5	2
29	0400262	SCREW, 5/8-11X2-1/2 HHC GR8	32
30	0400286	SCREW, 3/4-10X2-3/4 HHC GR8	12
31	0400336	SCREW, 1-8X3 HHC GR8	40

ITEM	PART NUMBER	DESCRIPTION	QTY
32	0400367	NUT, 1/4-20 LOK	2
33	0400379	NUT, 5/16-18 SPR J	8
34	0400408	NUT, 1/2-13 LOK	6
35	0400426	NUT, 5/8-11 LOK GR8	32
36	0400431	NUT, 3/4-10 LOK GR8	12
37	0400451	WASHER, 1/4	2
38	0400452	LKWASHER, 1/4	8
39	0400467	WASHER, SAE 1/2" HARDENED PL	2
40	0400480	WASHER, 3/8	4
41	0400482	LKWASHER, 3/8	4
42	0400491	LKWASHER, 1/2	10
43	0400497	WASHER, 1/2 GR8	2
44	0400503	WASHER, 5/8 GR8	32
45	0400522	WASHER, 1-1/16X2X1/8 TH YZ	40
46	0400980	SCREW, 3/8-16X1 FHS	12
47	0402032	SCREW, 5/16-18X1 HHC SS	4
48	0402043	SCREW, 3/8-16X1-1/4 HHC SS	16
49	0402110	WASHER, 1/4 SS	4
50	0402118	LKWASHER, 5/16 SS	4
51	0402121	LKWASHER, 3/8 SS	16
52	07002416	PIN, U/L LIFT CYLINDER BASE	2
53	07002417	COVER, LEFT CHAIN BOX	1
54	07002418	COVER, RIGHT CAHIN BOX	1
55	07002692	FLOOR SHEET, MID CENTER COVER	1
56	07002693	FLOOR SHEET, LEFT MID DECK	1
57	07002696	FLOOR SHEET, RIGHT MID DECK	1
58	07002697	FLOOR SHEET, LEFT REAR DECK	1
59	07002698	FLOOR SHEET, RIGHT REAR DECK	1
60	07002699	CHANNEL, VALVE COVER	1
61	07008501	PLATE, FRONT HYD COVER	1
62	07030626	PLATE - SPACER	4
63	0715947	ANGLE, WINCH MTG	2

ITEM	PART NUMBER	DESCRIPTION	QTY
64	0715948	ANGLE, WINCH MTG	2
65	0715949	ANGLE, WINCH MTG	2
66	0715950	ANGLE, WINCH MTG	2
67	0717763	PIN, FLEET SHEAVE	2
68	0717843	PIN, CABLE RETAINER	4
69	0722002	PLATE - REAR O/R COVER	2
70	0724476	PAD - NYLATRON - BBOM GUIDE	2
71	0725440	SHIM, WINCH, 35K DP	8
72	08004865	SUBFRAME WLMT - 1140 RXP KNEEB	1
73	0806727	PIN - PIVOT WLD'T	2
74	0807433	SWING LIMIT ANGLE WELDMENT	1
75	09000229	PIVOT MTG HOUSE LOCK ASSY	2
76	09002243	VALVE ASSY, 1150 KNEE MAIN	1
77	09002244	VALVE ASSY, 1150 KNEE BOOM U/L	1
78	09002246	VALVE ASSY, PRESSURE REDUCING	1
79	09009468	O/R CONTR VALVE KIT	1
80	0906572	KIT-WINCH CABLE STOW	2
81	0908055	REVERSING SHEAVE SUB-ASSEMBLY	2
82	0908062	CABLE SHEAVE & TENSIONER ASSY	2
83	0908432	ROTATOR PINLOCK ASSY	1
84	0911959	KIT, DRING PARTS W/SPACER WASH	4
85	24679012	LH LEG ASSEMBLY (USA)	1
86	24679013	RH LEG ASSEMBLY (USA)	1
87	25559013	RESERVOIR ASSEMBLY SPO	1
88	26687634	THRUST WASHER	2
89	805352500	PIN WELD'T UPPER TILT CY	4
90	9010520	FITTING-ELBOW 1/4T-1/4NPT	2
91	9041402	1/2 NC X 1 1/4 HHCS PLT GR8	10
92	HA293	FITTING-ADPTR SWV RUN	1

09009470 SUBFRAME ASSEMBLY, 1140 RXP KB (cont'd)

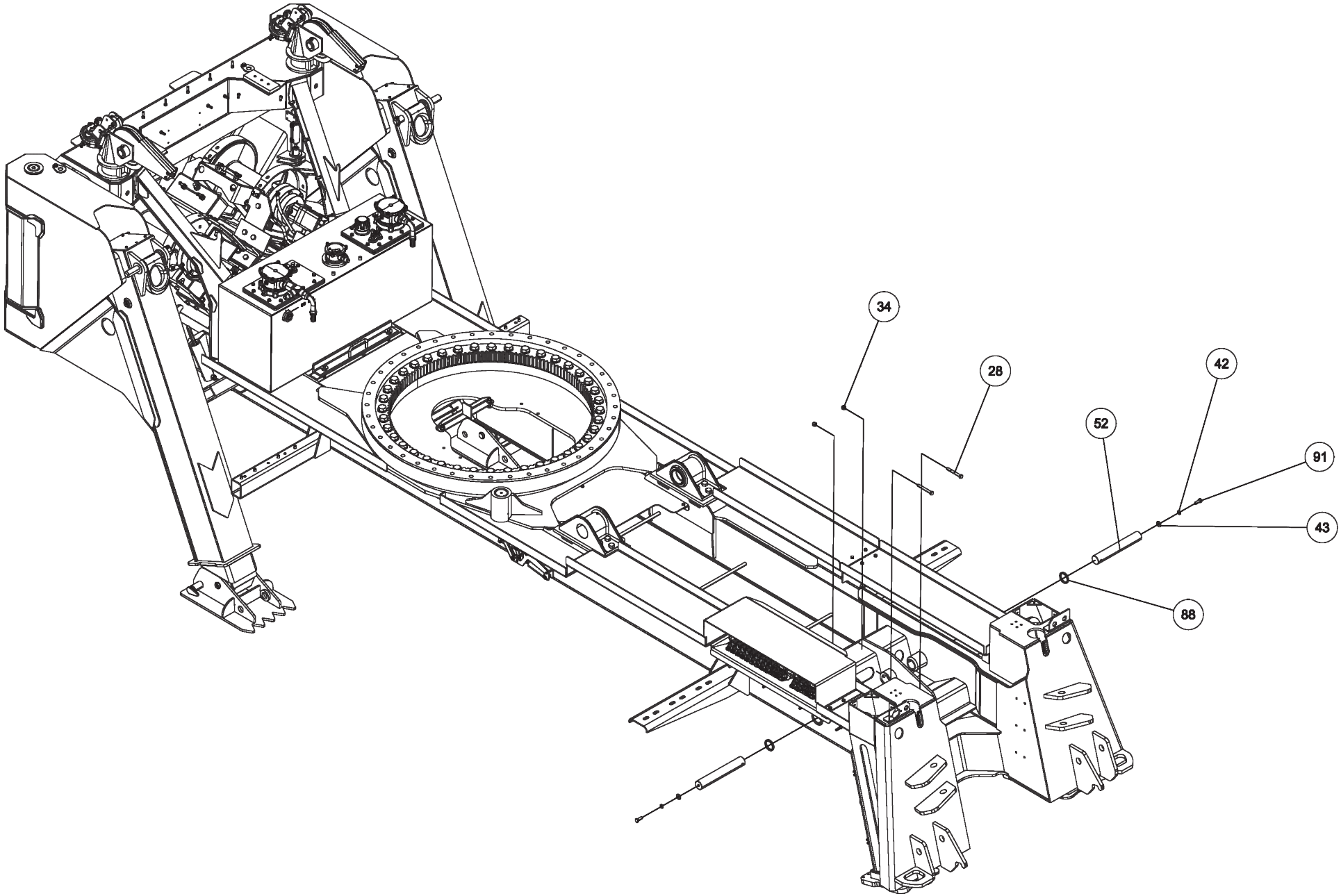

09009470 SUBFRAME ASSEMBLY, 1140 RXP KB (cont'd)

ITEM	PART NUMBER	DESCRIPTION	QTY
	09009470	SUBFRAME ASSEMBLY 1140 RXP KB	
1	0300041	CONNECTOR, 8MJ-8MB	4
2	0300108	SNAP RING, 2.5 5100-250	2
3	0300113	GREASE FITTING, 1/4-28 STR	5
4	0300229	FITTING, ELB 8MJ-8MP90	1
5	0301368	ADAPTER, 16MB-12MJ	1
6	0301470	FITTING, 90ELB 6MJ-8MB90	3
7	0301620	FITTING, HYD. 6MJ - 6MB90	4
8	0301696	FITTING, ELB 90 DEG 6MJ-6FJX90	2
9	0301895	GREASE FITTING, 1/8 STR PTF	7
10	0302065	FITTING, 6-FJ CAP	1
11	0302170	FITTING, SWV 90 DEG BENT	2
12	0302474	PIN, LINCH 3/16	8
13	0302538	BUSHING - U/L	2
14	0302575	FITTING-BULKHEAD RUN TEE	2
15	0302727	FITTING, HYD CONN	3
16	0306746	CYL HYD - FOLD	2
17	0307061	WINCH-35K dp 2-SP N.DRUM W/TEN	2
18	0307345	CONNECTOR, 16FJ-12MJ	1
19	0310406	VALVE, SHUTTLE LS10-30-8T-N	1
20	0310432	FITTING - ADAPTER 16MJ-20MB	2
21	0312570	BEARING - ROTATOR 1130/1140	1
22	0312575	BOOM PIVOT BRKT-MACHINED	2
23	0400070	SCREW, 1/4-20X1 HHC GR5	8
24	0400078	SCREW, 1/4-20X2 HHC GR5	2
25	0400109	SCREW, 5/16-18X1 HHC GR5	4
26	0400126	SCREW, 3/8-16X1 HHC GR5	4
27	0400206	SCREW, 1/2-13X5 HHC GR5	2
28	0400237	SCREW, 1/2-13X4 HHC GR5	2
29	0400262	SCREW, 5/8-11X2-1/2 HHC GR8	32
30	0400286	SCREW, 3/4-10X2-3/4 HHC GR8	12
31	0400336	SCREW, 1-8X3 HHC GR8	40

ITEM	PART NUMBER	DESCRIPTION	QTY
32	0400367	NUT, 1/4-20 LOK	2
33	0400379	NUT, 5/16-18 SPR J	8
34	0400408	NUT, 1/2-13 LOK	6
35	0400426	NUT, 5/8-11 LOK GR8	32
36	0400431	NUT, 3/4-10 LOK GR8	12
37	0400451	WASHER, 1/4	2
38	0400452	LKWASHER, 1/4	8
39	0400467	WASHER, SAE 1/2" HARDENED PL	2
40	0400480	WASHER, 3/8	4
41	0400482	LKWASHER, 3/8	4
42	0400491	LKWASHER, 1/2	10
43	0400497	WASHER, 1/2 GR8	2
44	0400503	WASHER, 5/8 GR8	32
45	0400522	WASHER, 1-1/16X2X1/8 TH YZ	40
46	0400980	SCREW, 3/8-16X1 FHS	12
47	0402032	SCREW, 5/16-18X1 HHC SS	4
48	0402043	SCREW, 3/8-16X1-1/4 HHC SS	16
49	0402110	WASHER, 1/4 SS	4
50	0402118	LKWASHER, 5/16 SS	4
51	0402121	LKWASHER, 3/8 SS	16
52	07002416	PIN, U/L LIFT CYLINDER BASE	2
53	07002417	COVER, LEFT CHAIN BOX	1
54	07002418	COVER, RIGHT CAHIN BOX	1
55	07002692	FLOOR SHEET, MID CENTER COVER	1
56	07002693	FLOOR SHEET, LEFT MID DECK	1
57	07002696	FLOOR SHEET, RIGHT MID DECK	1
58	07002697	FLOOR SHEET, LEFT REAR DECK	1
59	07002698	FLOOR SHEET, RIGHT REAR DECK	1
60	07002699	CHANNEL, VALVE COVER	1
61	07008501	PLATE, FRONT HYD COVER	1
62	07030626	PLATE - SPACER	4
63	0715947	ANGLE, WINCH MTG	2

ITEM	PART NUMBER	DESCRIPTION	QTY
64	0715948	ANGLE, WINCH MTG	2
65	0715949	ANGLE, WINCH MTG	2
66	0715950	ANGLE, WINCH MTG	2
67	0717763	PIN, FLEET SHEAVE	2
68	0717843	PIN, CABLE RETAINER	4
69	0722002	PLATE - REAR O/R COVER	2
70	0724476	PAD - NYLATRON - BBOM GUIDE	2
71	0725440	SHIM, WINCH, 35K DP	8
72	08004865	SUBFRAME WLMT - 1140 RXP KNEEB	1
73	0806727	PIN - PIVOT WLD'T	2
74	0807433	SWING LIMIT ANGLE WELDMENT	1
75	09000229	PIVOT MTG HOUSE LOCK ASSY	2
76	09002243	VALVE ASSY, 1150 KNEE MAIN	1
77	09002244	VALVE ASSY, 1150 KNEE BOOM U/L	1
78	09002246	VALVE ASSY, PRESSURE REDUCING	1
79	09009468	O/R CONTR VALVE KIT	1
80	0906572	KIT-WINCH CABLE STOW	2
81	0908055	REVERSING SHEAVE SUB-ASSEMBLY	2
82	0908062	CABLE SHEAVE & TENSIONER ASSY	2
83	0908432	ROTATOR PINLOCK ASSY	1
84	0911959	KIT, DRING PARTS W/SPACER WASH	4
85	24679012	LH LEG ASSEMBLY (USA)	1
86	24679013	RH LEG ASSEMBLY (USA)	1
87	25559013	RESERVOIR ASSEMBLY SPO	1
88	26687634	THRUST WASHER	2
89	805352500	PIN WELD'T UPPER TILT CY	4
90	9010520	FITTING-ELBOW 1/4T-1/4NPT	2
91	9041402	1/2 NC X 1 1/4 HHCS PLT GR8	10
92	HA293	FITTING-ADPTR SWV RUN	1

09009470 SUBFRAME ASSEMBLY, 1140 RXP KB (cont'd)

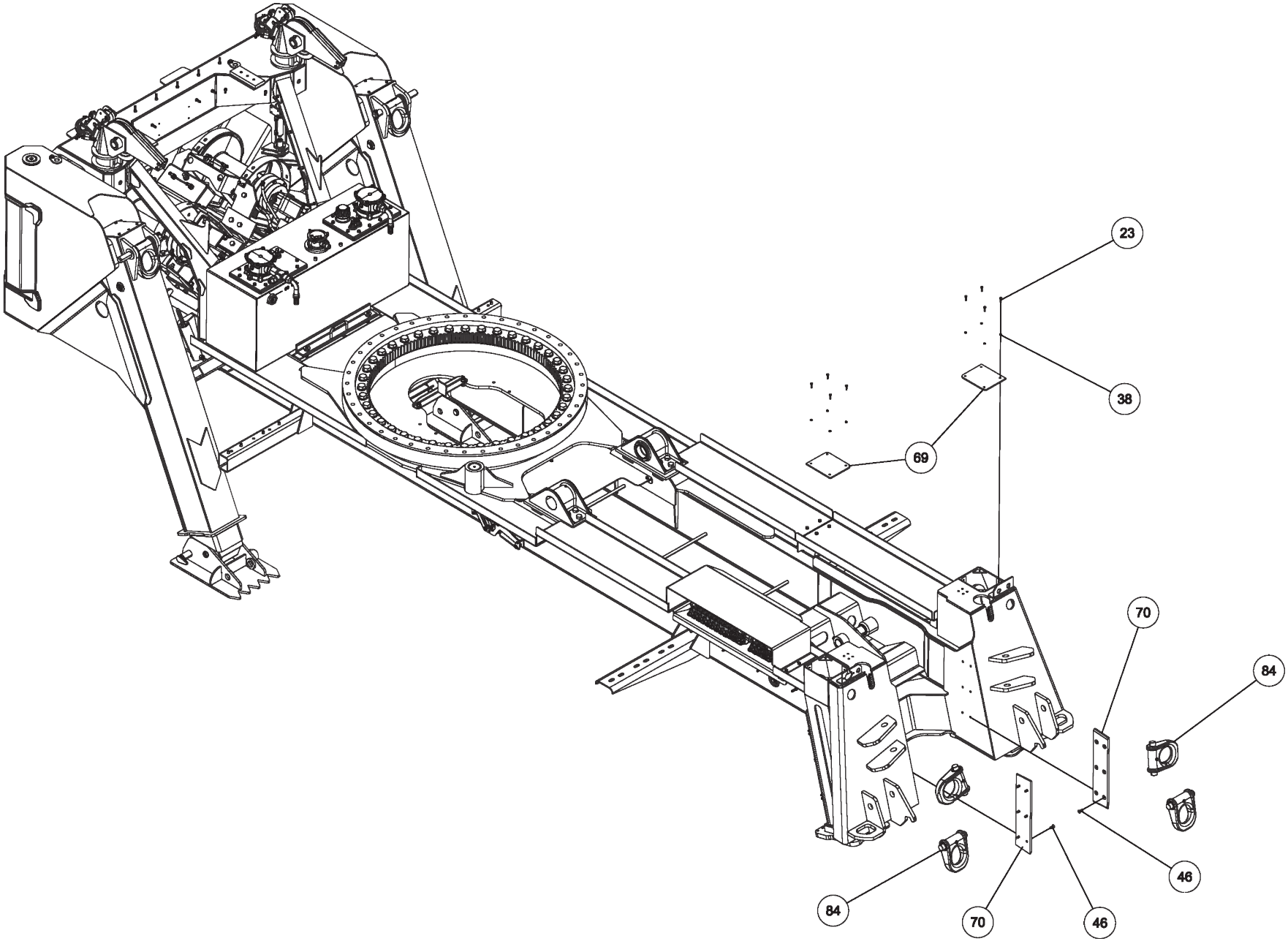

09009470 SUBFRAME ASSEMBLY, 1140 RXP KB (cont'd)

ITEM	PART NUMBER	DESCRIPTION	QTY
	09009470	SUBFRAME ASSEMBLY 1140 RXP KB	
1	0300041	CONNECTOR, 8MJ-8MB	4
2	0300108	SNAP RING, 2.5 5100-250	2
3	0300113	GREASE FITTING, 1/4-28 STR	5
4	0300229	FITTING, ELB 8MJ-8MP90	1
5	0301368	ADAPTER, 16MB-12MJ	1
6	0301470	FITTING, 90ELB 6MJ-8MB90	3
7	0301620	FITTING, HYD. 6MJ - 6MB90	4
8	0301696	FITTING, ELB 90 DEG 6MJ-6FJX90	2
9	0301895	GREASE FITTING, 1/8 STR PTF	7
10	0302065	FITTING, 6-FJ CAP	1
11	0302170	FITTING, SWV 90 DEG BENT	2
12	0302474	PIN, LINCH 3/16	8
13	0302538	BUSHING - U/L	2
14	0302575	FITTING-BULKHEAD RUN TEE	2
15	0302727	FITTING, HYD CONN	3
16	0306746	CYL HYD - FOLD	2
17	0307061	WINCH-35K dp 2-SP N.DRUM W/TEN	2
18	0307345	CONNECTOR, 16FJ-12MJ	1
19	0310406	VALVE, SHUTTLE LS10-30-8T-N	1
20	0310432	FITTING - ADAPTER 16MJ-20MB	2
21	0312570	BEARING - ROTATOR 1130/1140	1
22	0312575	BOOM PIVOT BRKT-MACHINED	2
23	0400070	SCREW, 1/4-20X1 HHC GR5	8
24	0400078	SCREW, 1/4-20X2 HHC GR5	2
25	0400109	SCREW, 5/16-18X1 HHC GR5	4
26	0400126	SCREW, 3/8-16X1 HHC GR5	4
27	0400206	SCREW, 1/2-13X5 HHC GR5	2
28	0400237	SCREW, 1/2-13X4 HHC GR5	2
29	0400262	SCREW, 5/8-11X2-1/2 HHC GR8	32
30	0400286	SCREW, 3/4-10X2-3/4 HHC GR8	12
31	0400336	SCREW, 1-8X3 HHC GR8	40

ITEM	PART NUMBER	DESCRIPTION	QTY
32	0400367	NUT, 1/4-20 LOK	2
33	0400379	NUT, 5/16-18 SPR J	8
34	0400408	NUT, 1/2-13 LOK	6
35	0400426	NUT, 5/8-11 LOK GR8	32
36	0400431	NUT, 3/4-10 LOK GR8	12
37	0400451	WASHER, 1/4	2
38	0400452	LKWASHER, 1/4	8
39	0400467	WASHER, SAE 1/2" HARDENED PL	2
40	0400480	WASHER, 3/8	4
41	0400482	LKWASHER, 3/8	4
42	0400491	LKWASHER, 1/2	10
43	0400497	WASHER, 1/2 GR8	2
44	0400503	WASHER, 5/8 GR8	32
45	0400522	WASHER, 1-1/16X2X1/8 TH YZ	40
46	0400980	SCREW, 3/8-16X1 FHS	12
47	0402032	SCREW, 5/16-18X1 HHC SS	4
48	0402043	SCREW, 3/8-16X1-1/4 HHC SS	16
49	0402110	WASHER, 1/4 SS	4
50	0402118	LKWASHER, 5/16 SS	4
51	0402121	LKWASHER, 3/8 SS	16
52	07002416	PIN, U/L LIFT CYLINDER BASE	2
53	07002417	COVER, LEFT CHAIN BOX	1
54	07002418	COVER, RIGHT CAHIN BOX	1
55	07002692	FLOOR SHEET, MID CENTER COVER	1
56	07002693	FLOOR SHEET, LEFT MID DECK	1
57	07002696	FLOOR SHEET, RIGHT MID DECK	1
58	07002697	FLOOR SHEET, LEFT REAR DECK	1
59	07002698	FLOOR SHEET, RIGHT REAR DECK	1
60	07002699	CHANNEL, VALVE COVER	1
61	07008501	PLATE, FRONT HYD COVER	1
62	07030626	PLATE - SPACER	4
63	0715947	ANGLE, WINCH MTG	2

ITEM	PART NUMBER	DESCRIPTION	QTY
64	0715948	ANGLE, WINCH MTG	2
65	0715949	ANGLE, WINCH MTG	2
66	0715950	ANGLE, WINCH MTG	2
67	0717763	PIN, FLEET SHEAVE	2
68	0717843	PIN, CABLE RETAINER	4
69	0722002	PLATE - REAR O/R COVER	2
70	0724476	PAD - NYLATRON - BBOM GUIDE	2
71	0725440	SHIM, WINCH, 35K DP	8
72	08004865	SUBFRAME WLMT - 1140 RXP KNEEB	1
73	0806727	PIN - PIVOT WLD'T	2
74	0807433	SWING LIMIT ANGLE WELDMENT	1
75	09000229	PIVOT MTG HOUSE LOCK ASSY	2
76	09002243	VALVE ASSY, 1150 KNEE MAIN	1
77	09002244	VALVE ASSY, 1150 KNEE BOOM U/L	1
78	09002246	VALVE ASSY, PRESSURE REDUCING	1
79	09009468	O/R CONTR VALVE KIT	1
80	0906572	KIT-WINCH CABLE STOW	2
81	0908055	REVERSING SHEAVE SUB-ASSEMBLY	2
82	0908062	CABLE SHEAVE & TENSIONER ASSY	2
83	0908432	ROTATOR PINLOCK ASSY	1
84	0911959	KIT, DRING PARTS W/SPACER WASH	4
85	24679012	LH LEG ASSEMBLY (USA)	1
86	24679013	RH LEG ASSEMBLY (USA)	1
87	25559013	RESERVOIR ASSEMBLY SPO	1
88	26687634	THRUST WASHER	2
89	805352500	PIN WELD'T UPPER TILT CY	4
90	9010520	FITTING-ELBOW 1/4T-1/4NPT	2
91	9041402	1/2 NC X 1 1/4 HHCS PLT GR8	10
92	HA293	FITTING-ADPTR SWV RUN	1

09009470 SUBFRAME ASSEMBLY, 1140 RXP KB (cont'd)

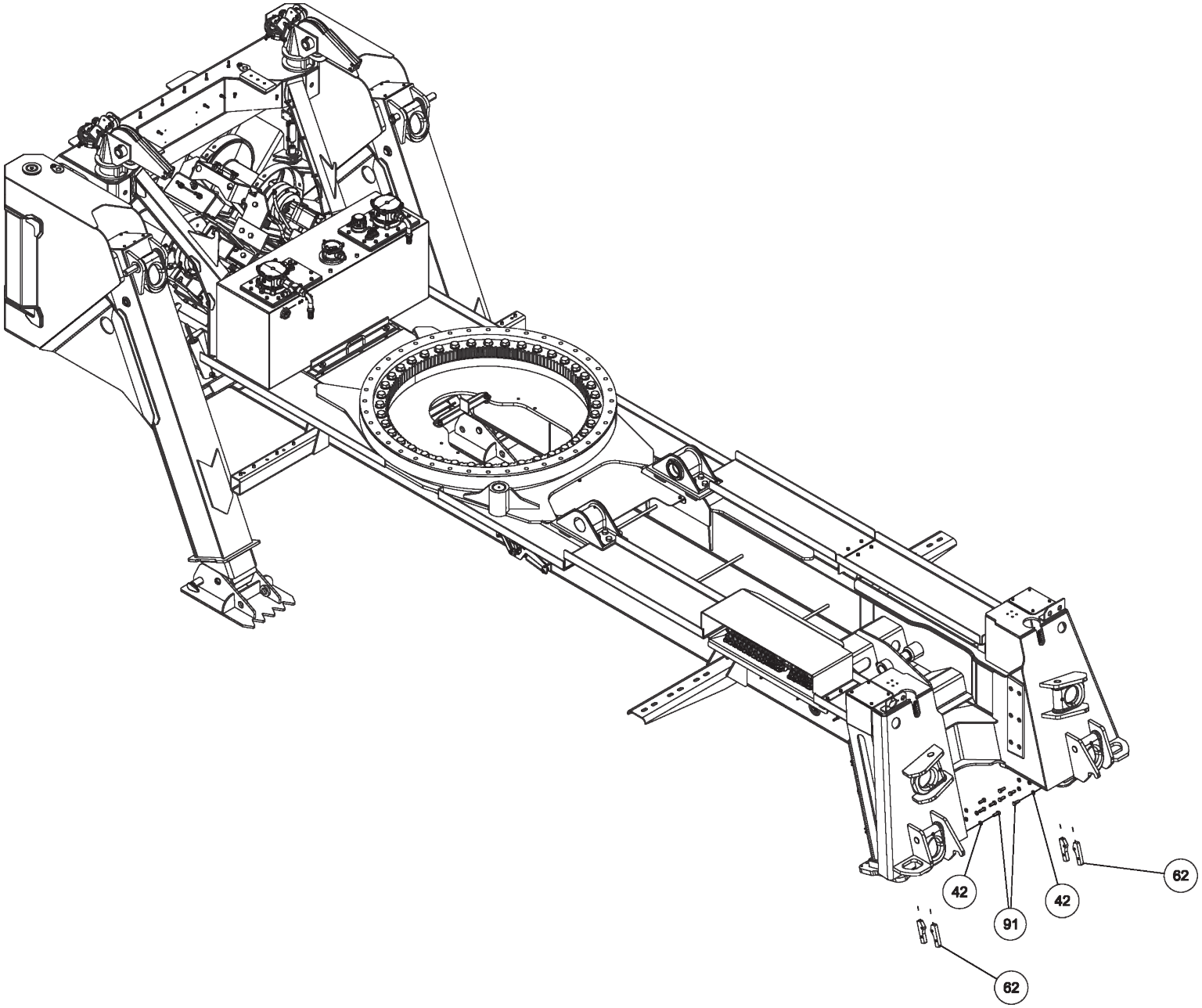

09009470 SUBFRAME ASSEMBLY, 1140 RXP KB (cont'd)

ITEM	PART NUMBER	DESCRIPTION	QTY
	09009470	SUBFRAME ASSEMBLY 1140 RXP KB	
1	0300041	CONNECTOR, 8MJ-8MB	4
2	0300108	SNAP RING, 2.5 5100-250	2
3	0300113	GREASE FITTING, 1/4-28 STR	5
4	0300229	FITTING, ELB 8MJ-8MP90	1
5	0301368	ADAPTER, 16MB-12MJ	1
6	0301470	FITTING, 90ELB 6MJ-8MB90	3
7	0301620	FITTING, HYD. 6MJ - 6MB90	4
8	0301696	FITTING, ELB 90 DEG 6MJ-6FJX90	2
9	0301895	GREASE FITTING, 1/8 STR PTF	7
10	0302065	FITTING, 6-FJ CAP	1
11	0302170	FITTING, SWV 90 DEG BENT	2
12	0302474	PIN, LINCH 3/16	8
13	0302538	BUSHING - U/L	2
14	0302575	FITTING-BULKHEAD RUN TEE	2
15	0302727	FITTING, HYD CONN	3
16	0306746	CYL HYD - FOLD	2
17	0307061	WINCH-35K dp 2-SP N.DRUM W/TEN	2
18	0307345	CONNECTOR, 16FJ-12MJ	1
19	0310406	VALVE, SHUTTLE LS10-30-8T-N	1
20	0310432	FITTING - ADAPTER 16MJ-20MB	2
21	0312570	BEARING - ROTATOR 1130/1140	1
22	0312575	BOOM PIVOT BRKT-MACHINED	2
23	0400070	SCREW, 1/4-20X1 HHC GR5	8
24	0400078	SCREW, 1/4-20X2 HHC GR5	2
25	0400109	SCREW, 5/16-18X1 HHC GR5	4
26	0400126	SCREW, 3/8-16X1 HHC GR5	4
27	0400206	SCREW, 1/2-13X5 HHC GR5	2
28	0400237	SCREW, 1/2-13X4 HHC GR5	2
29	0400262	SCREW, 5/8-11X2-1/2 HHC GR8	32
30	0400286	SCREW, 3/4-10X2-3/4 HHC GR8	12
31	0400336	SCREW, 1-8X3 HHC GR8	40

ITEM	PART NUMBER	DESCRIPTION	QTY
32	0400367	NUT, 1/4-20 LOK	2
33	0400379	NUT, 5/16-18 SPR J	8
34	0400408	NUT, 1/2-13 LOK	6
35	0400426	NUT, 5/8-11 LOK GR8	32
36	0400431	NUT, 3/4-10 LOK GR8	12
37	0400451	WASHER, 1/4	2
38	0400452	LKWASHER, 1/4	8
39	0400467	WASHER, SAE 1/2" HARDENED PL	2
40	0400480	WASHER, 3/8	4
41	0400482	LKWASHER, 3/8	4
42	0400491	LKWASHER, 1/2	10
43	0400497	WASHER, 1/2 GR8	2
44	0400503	WASHER, 5/8 GR8	32
45	0400522	WASHER, 1-1/16X2X1/8 TH YZ	40
46	0400980	SCREW, 3/8-16X1 FHS	12
47	0402032	SCREW, 5/16-18X1 HHC SS	4
48	0402043	SCREW, 3/8-16X1-1/4 HHC SS	16
49	0402110	WASHER, 1/4 SS	4
50	0402118	LKWASHER, 5/16 SS	4
51	0402121	LKWASHER, 3/8 SS	16
52	07002416	PIN, U/L LIFT CYLINDER BASE	2
53	07002417	COVER, LEFT CHAIN BOX	1
54	07002418	COVER, RIGHT CAHIN BOX	1
55	07002692	FLOOR SHEET, MID CENTER COVER	1
56	07002693	FLOOR SHEET, LEFT MID DECK	1
57	07002696	FLOOR SHEET, RIGHT MID DECK	1
58	07002697	FLOOR SHEET, LEFT REAR DECK	1
59	07002698	FLOOR SHEET, RIGHT REAR DECK	1
60	07002699	CHANNEL, VALVE COVER	1
61	07008501	PLATE, FRONT HYD COVER	1
62	07030626	PLATE - SPACER	4
63	0715947	ANGLE, WINCH MTG	2

ITEM	PART NUMBER	DESCRIPTION	QTY
64	0715948	ANGLE, WINCH MTG	2
65	0715949	ANGLE, WINCH MTG	2
66	0715950	ANGLE, WINCH MTG	2
67	0717763	PIN, FLEET SHEAVE	2
68	0717843	PIN, CABLE RETAINER	4
69	0722002	PLATE - REAR O/R COVER	2
70	0724476	PAD - NYLATRON - BBOM GUIDE	2
71	0725440	SHIM, WINCH, 35K DP	8
72	08004865	SUBFRAME WLMT - 1140 RXP KNEEB	1
73	0806727	PIN - PIVOT WLD'T	2
74	0807433	SWING LIMIT ANGLE WELDMENT	1
75	09000229	PIVOT MTG HOUSE LOCK ASSY	2
76	09002243	VALVE ASSY, 1150 KNEE MAIN	1
77	09002244	VALVE ASSY, 1150 KNEE BOOM U/L	1
78	09002246	VALVE ASSY, PRESSURE REDUCING	1
79	09009468	O/R CONTR VALVE KIT	1
80	0906572	KIT-WINCH CABLE STOW	2
81	0908055	REVERSING SHEAVE SUB-ASSEMBLY	2
82	0908062	CABLE SHEAVE & TENSIONER ASSY	2
83	0908432	ROTATOR PINLOCK ASSY	1
84	0911959	KIT, DRING PARTS W/SPACER WASH	4
85	24679012	LH LEG ASSEMBLY (USA)	1
86	24679013	RH LEG ASSEMBLY (USA)	1
87	25559013	RESERVOIR ASSEMBLY SPO	1
88	26687634	THRUST WASHER	2
89	805352500	PIN WELD'T UPPER TILT CY	4
90	9010520	FITTING-ELBOW 1/4T-1/4NPT	2
91	9041402	1/2 NC X 1 1/4 HHCS PLT GR8	10
92	HA293	FITTING-ADPTR SWV RUN	1

09000229 PIVOT MTG HOUSE LOCK ASSEMBLY

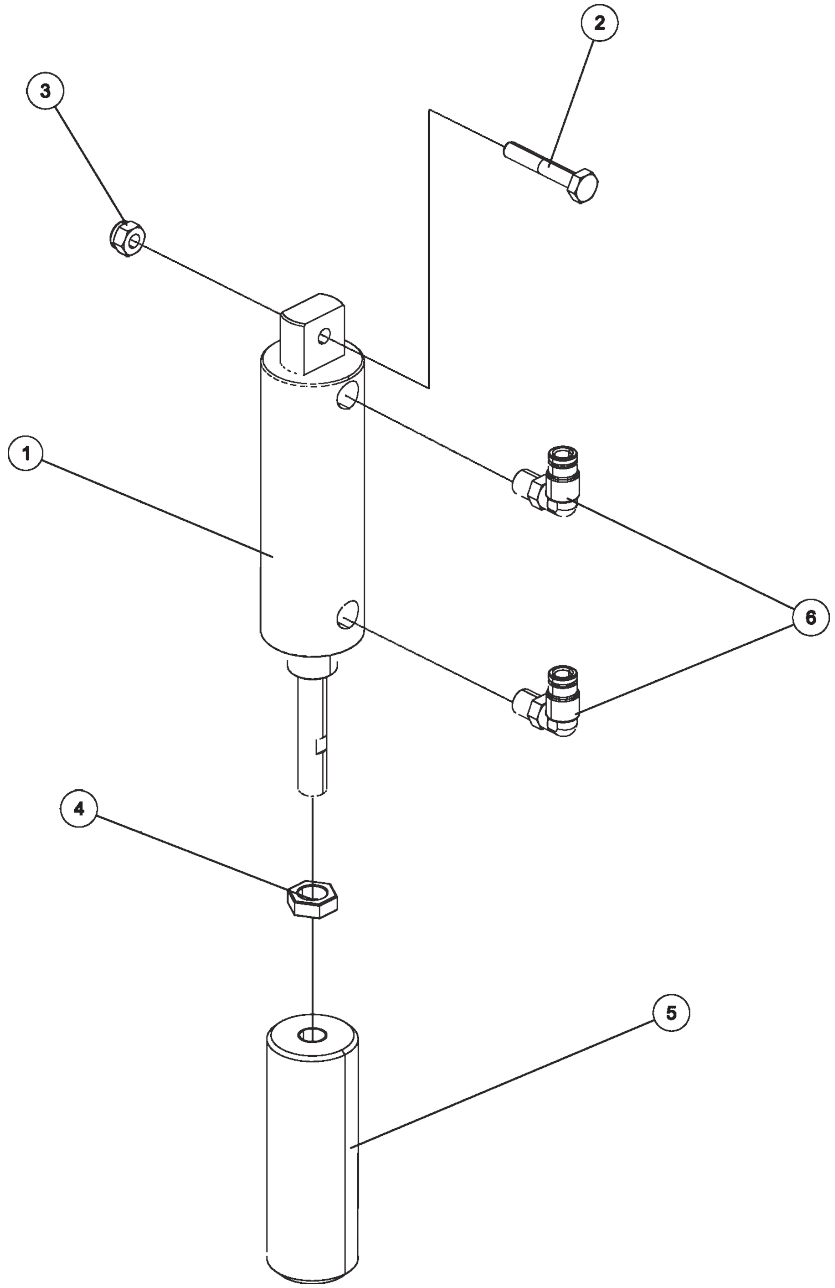

09000229 PIVOT MTG HOUSE LOCK ASSEMBLY (cont'd)

ITEM	PART NUMBER	DESCRIPTION	QTY
	09000229	PIVOT MTG HOUSE LOCK ASSEMBLY	
1	0306698	AIR CYLINDER-1.5BORE/1.71STROK	2
2	0400084	SCREW, 1/4-20X1-1/2 HHC GR5	2
3	0400367	NUT, 1/4-20 LOK	2
4	0400401	NUT, 7/16-20 JAM PL	2
5	0719679	PIN, RETAINER	2
6	9010030	FITT, BRASS ELBOW 1/4T-1/8MPX	4

09002243 VALVE ASSEMBLY KB MAIN

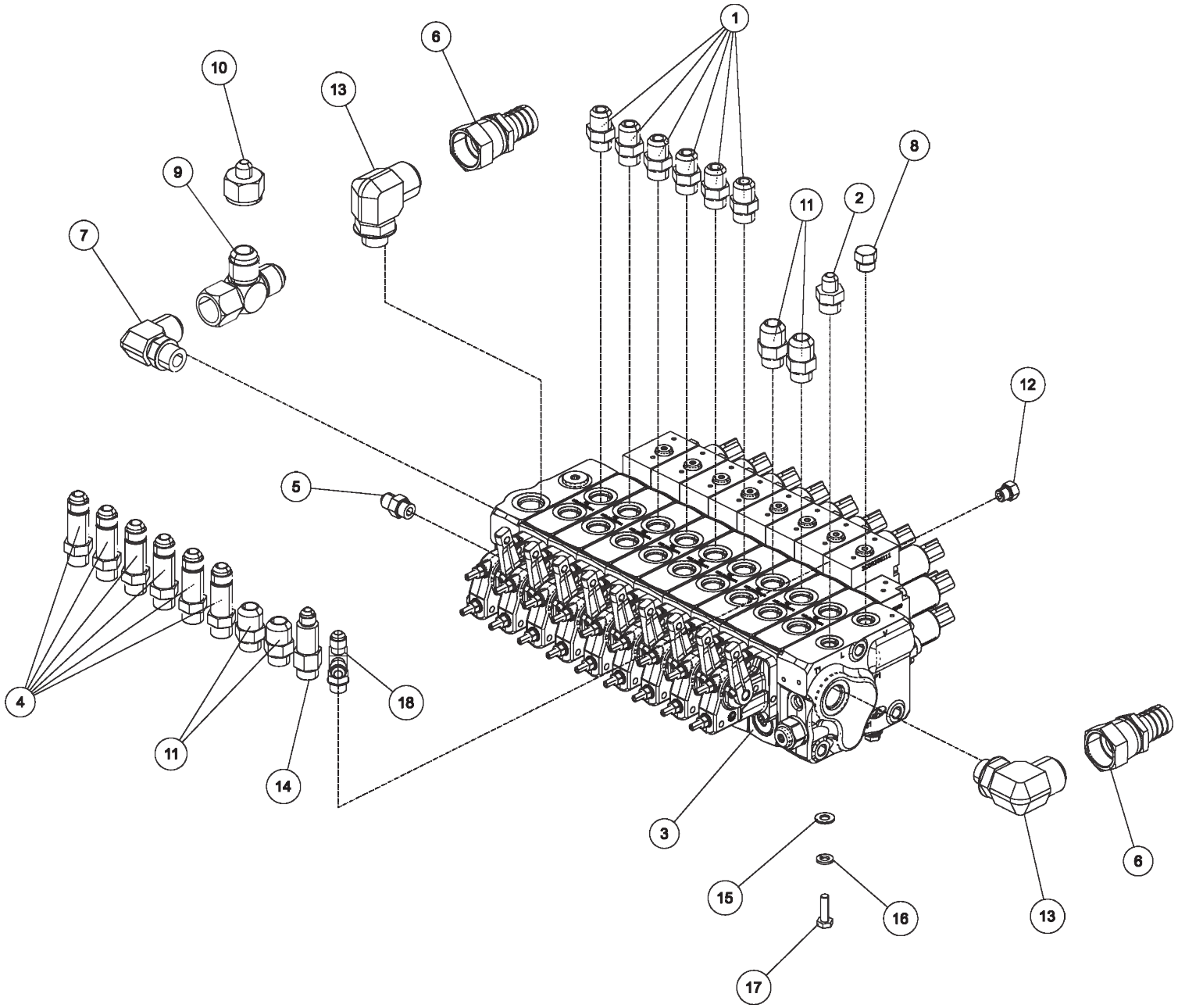

09002243 VALVE ASSEMBLY KB MAIN (cont'd)

ITEM	PART NUMBER	DESCRIPTION	QTY
	09002243	VALVE ASSEMBLY 1150 KNEE	
1	0300041	CONNECTOR, 8MJ-8MB	6
2	0300044	FITT, HYD CONN. 6MJ-8MB	1
3	03001779	VALVE, MAIN CONTROL	1
4	0301445	FITTING, EXTENDED	6
5	0301522	ADAPTER, 6MJ-6MB	1
6	0301767	FITTING, HOSE BARB 1FJIX	2
7	0302085	FITTING, 90 DEG ADPTR	1
8	0302507	6 SAE PLUG (6MB PLUG)	1
9	0302826	FITTING, TEE	1
10	0302829	FITTING, ADAPTOR	1
11	0303079	ADAPTER, 10MJ-8MB	4
12	0303886	4 MB-PLUG	16
13	0307444	FITTING, 16MJ-10MB90	2
14	0310289	FITTING-LONG ADAPTER 6MJ-8MBLL	1
15	0400463	WASHER, 5/16	3
16	0400464	LKWASHER, 5/16	3
17	0410540	SCREW, M8-1.25X25 HHC 8.8	3
18	9012594	FITT,HYD RUN TEE, 6MJx6MBx6MJ	1

09002244 VALVE ASSEMBLY KB U/L

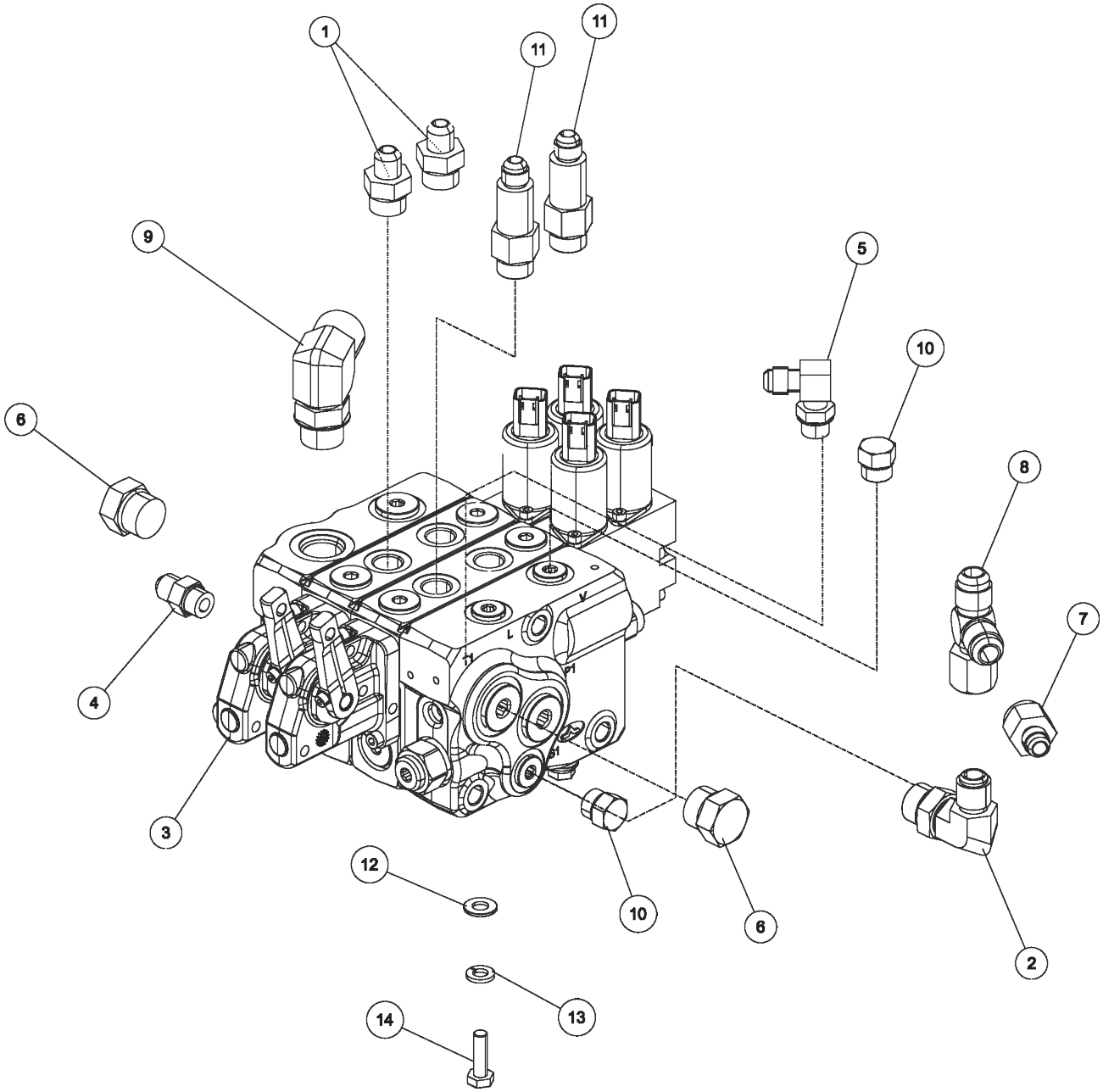

09002244 VALVE ASSEMBLY KB U/L (cont'd)

ITEM	PART NUMBER	DESCRIPTION	QTY
	09002244	VALVE ASSEMBLY 1150 KNEE U/L	
1	0300044	FITT, HYD CONN. 6MJ-8MB	2
2	0300052	FITTING, ELB 8MJ-10MB 90	1
3	03001780	VALVE, 4K U/L CONTROL	1
4	0301522	ADAPTER, 6MJ-6MB	1
5	0301620	FITTING, HYD. 6MJ - 6MB90	1
6	0301783	FIT-STR THRD O-RING PLUG 10MB	2
7	0301995	FITTING, ADAPTER STR	1
8	0302052	TEE, 8MJ-8FJX-8MJ RUN	1
9	0302085	FITTING, 90 DEG ADPTR	1
10	0302507	6 SAE PLUG (6MB PLUG)	2
11	0310289	FITTING-LONG ADAPTER 6MJ-8MBLL	2
12	0400463	WASHER, 5/16	3
13	0400464	LKWASHER, 5/16	3
14	0410540	SCREW, M8-1.25X25 HHC 8.8	3

09002246 VALVE ASSEMBLY PRESSURE REDUCING

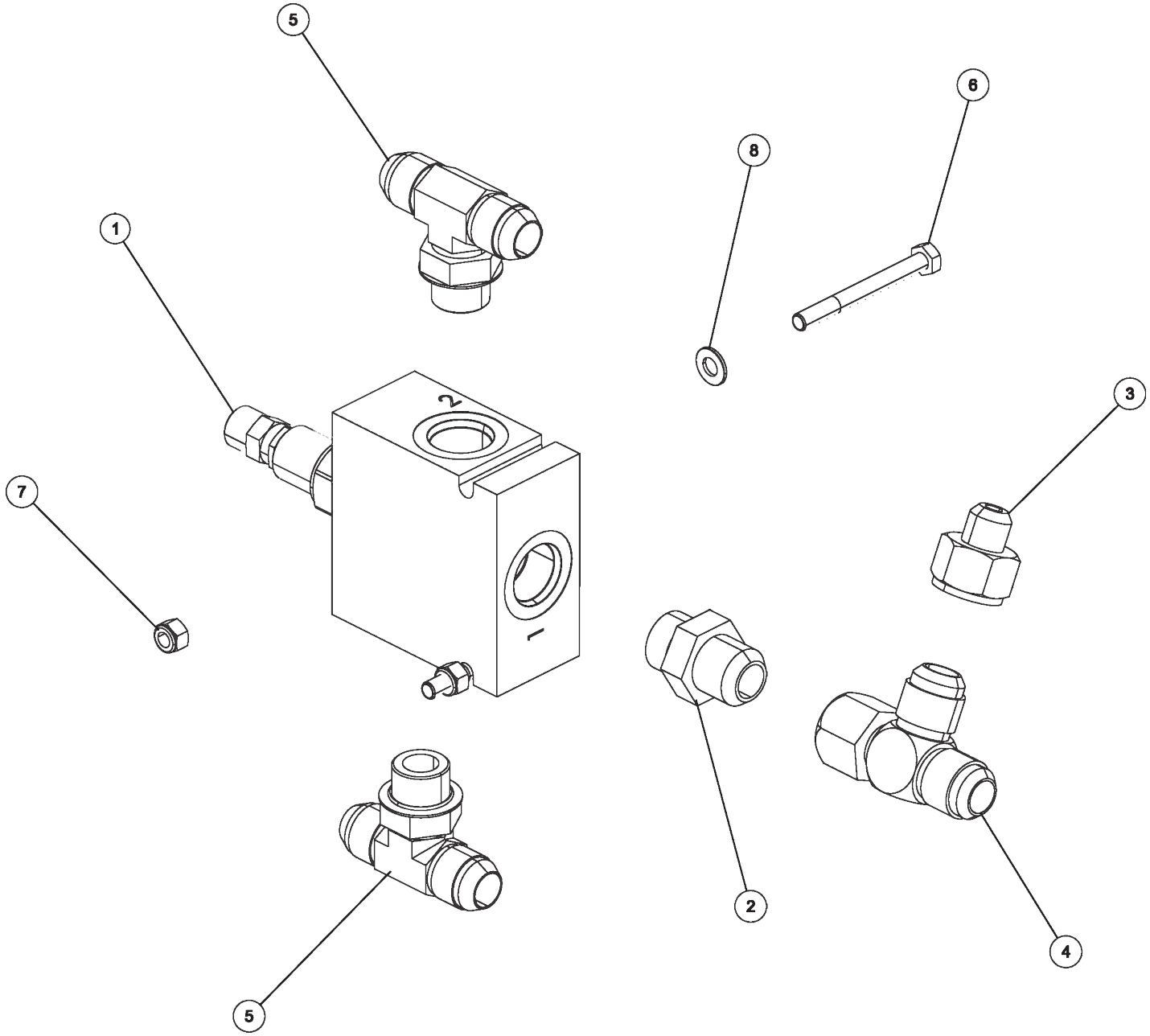

09002246 VALVE ASSEMBLY PRESSURE REDUCING (cont'd)

ITEM	PART NUMBER	DESCRIPTION	QTY
	09002246	VALVE ASSEMBLY PRESSURE REDUCING	
1	03001781	VALVE, PRESSURE REDUCING	1
2	0300400	CONNECTOR, 12MJ-12MB	1
3	0301372	FITTING, ST.CONN. 12FJ-8MJ	1
4	0302826	FITTING, TEE	1
5	0310520	FITTING - TEE 12MJ-12MJ-12MB	2
6	0400114	SCREW, 5/16-18X3 HHC GR5	2
7	0400382	NUT, 5/16-18 LOK	2
8	0400463	WASHER, 5/16	2

09009468 OUTRIGGER CONTROL VALVE ASSEMBLY

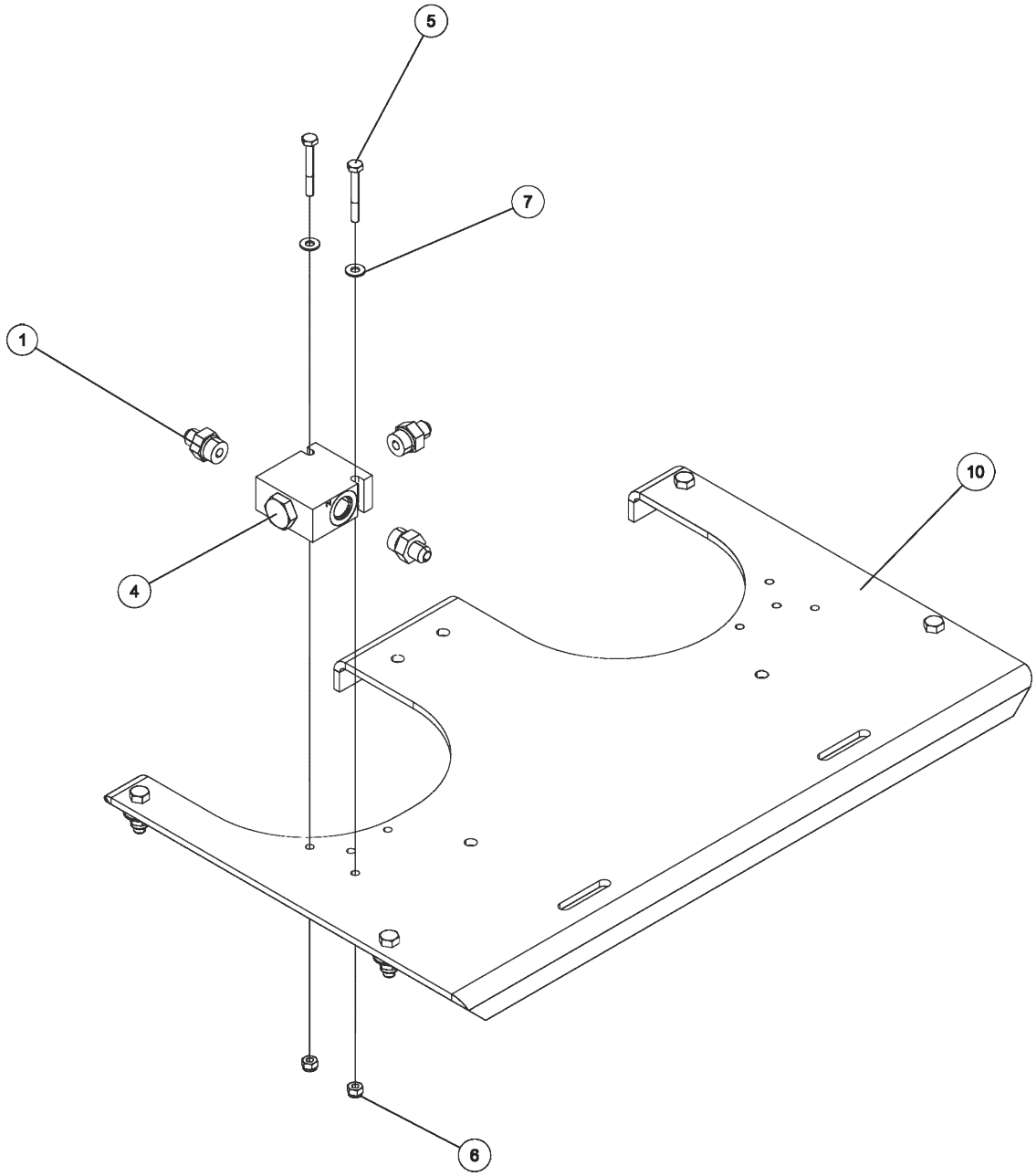

09009468 OUTRIGGER CONTROL VALVE ASSEMBLY (cont'd)

ITEM	PART NUMBER	DESCRIPTION	QTY
	09009468	OUTRIGGER CONTROL VALVE	
1	0300044	FITT, HYD CONN. 6MJ-8MB	3
2	0301473	HOSE HYD, 18" LG	2
3	0302926	HOSE HYD, 29" LONG	1
4	0310406	VALVE, SHUTTLE LS10-30-8T-N	1
5	0400078	SCREW, 1/4-20X2 HHC GR5	2
6	0400367	NUT, 1/4-20 LOK	4
7	0400451	WASHER, 1/4	2
8	0910616	OUTRIGGER CONT VALVE KIT	1
9	0910635	OUTRIGGER BLEED VALVE ASSY	1
10	0910915	KIT, FRONT VALVE MOUNTING	1

09009468 OUTRIGGER CONTROL VALVE ASSEMBLY (cont'd)

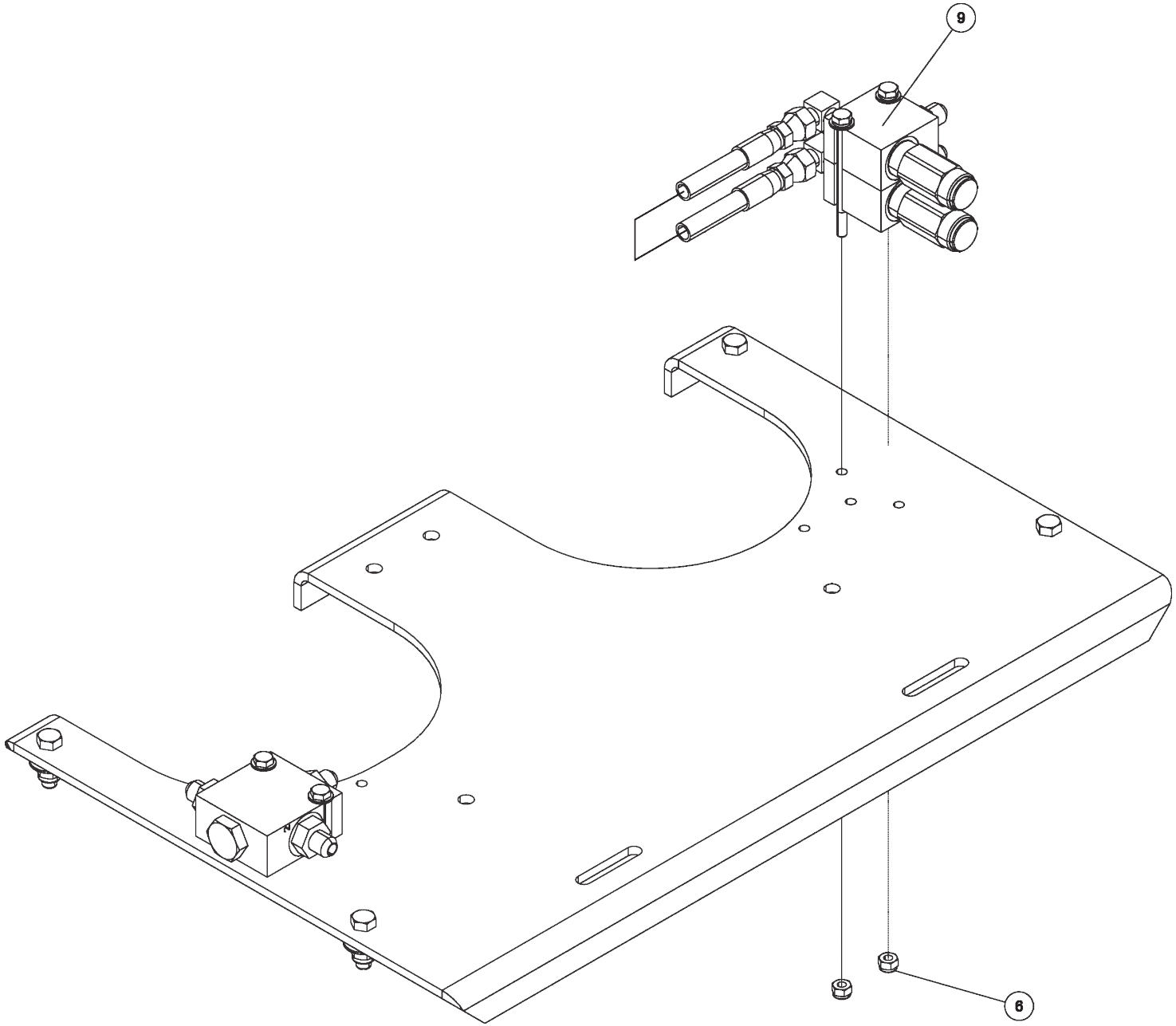

09009468 OUTRIGGER CONTROL VALVE ASSEMBLY (cont'd)

ITEM	PART NUMBER	DESCRIPTION	QTY
	09009468	OUTRIGGER CONTROL VALVE	
1	0300044	FITT, HYD CONN. 6MJ-8MB	3
2	0301473	HOSE HYD, 18" LG	2
3	0302926	HOSE HYD, 29" LONG	1
4	0310406	VALVE, SHUTTLE LS10-30-8T-N	1
5	0400078	SCREW, 1/4-20X2 HHC GR5	2
6	0400367	NUT, 1/4-20 LOK	4
7	0400451	WASHER, 1/4	2
8	0910616	OUTRIGGER CONT VALVE KIT	1
9	0910635	OUTRIGGER BLEED VALVE ASSY	1
10	0910915	KIT, FRONT VALVE MOUNTING	1

09009468 OUTRIGGER CONTROL VALVE ASSEMBLY (cont'd)

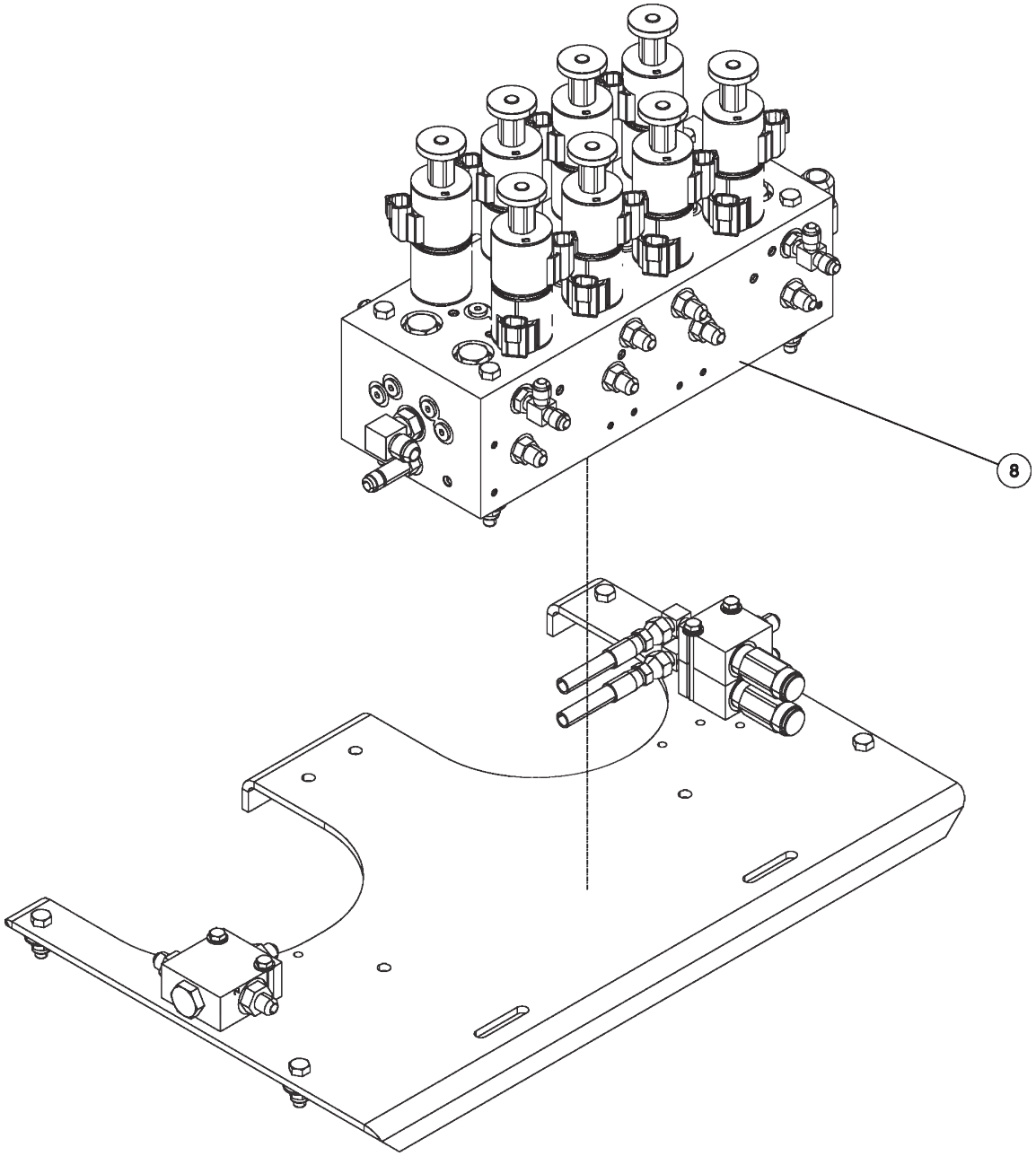

09009468 OUTRIGGER CONTROL VALVE ASSEMBLY (cont'd)

ITEM	PART NUMBER	DESCRIPTION	QTY
	09009468	OUTRIGGER CONTROL VALVE	
1	0300044	FITT, HYD CONN. 6MJ-8MB	3
2	0301473	HOSE HYD, 18" LG	2
3	0302926	HOSE HYD, 29" LONG	1
4	0310406	VALVE, SHUTTLE LS10-30-8T-N	1
5	0400078	SCREW, 1/4-20X2 HHC GR5	2
6	0400367	NUT, 1/4-20 LOK	4
7	0400451	WASHER, 1/4	2
8	0910616	OUTRIGGER CONT VALVE KIT	1
9	0910635	OUTRIGGER BLEED VALVE ASSY	1
10	0910915	KIT, FRONT VALVE MOUNTING	1

09009468 OUTRIGGER CONTROL VALVE ASSEMBLY (cont'd)

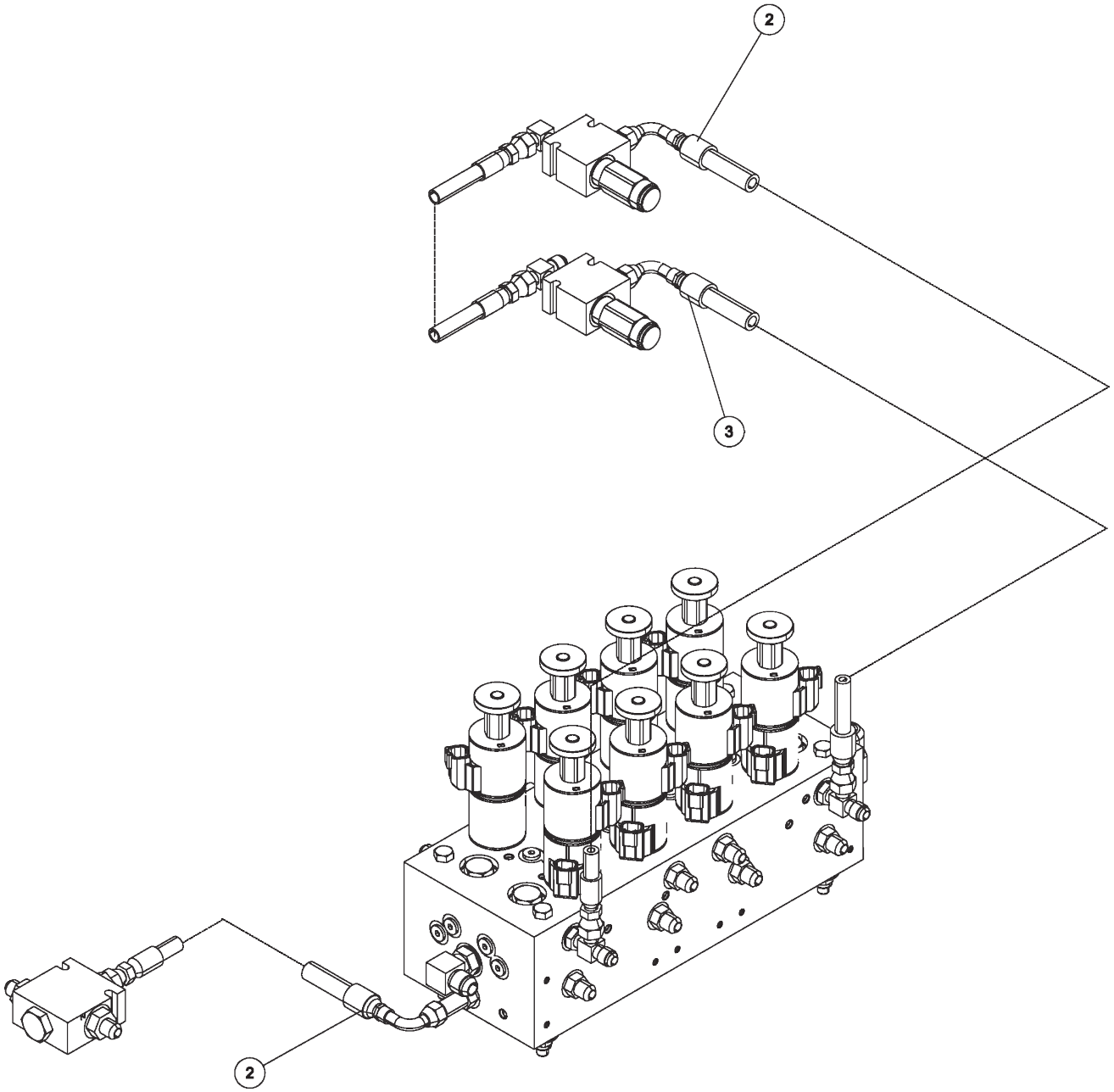

09009468 OUTRIGGER CONTROL VALVE ASSEMBLY (cont'd)

ITEM	PART NUMBER	DESCRIPTION	QTY
	09009468	OUTRIGGER CONTROL VALVE	
1	0300044	FITT, HYD CONN. 6MJ-8MB	3
2	0301473	HOSE HYD, 18" LG	2
3	0302926	HOSE HYD, 29" LONG	1
4	0310406	VALVE, SHUTTLE LS10-30-8T-N	1
5	0400078	SCREW, 1/4-20X2 HHC GR5	2
6	0400367	NUT, 1/4-20 LOK	4
7	0400451	WASHER, 1/4	2
8	0910616	OUTRIGGER CONT VALVE KIT	1
9	0910635	OUTRIGGER BLEED VALVE ASSY	1
10	0910915	KIT, FRONT VALVE MOUNTING	1

0910616 OUTRIGGER CONTROL VALVE

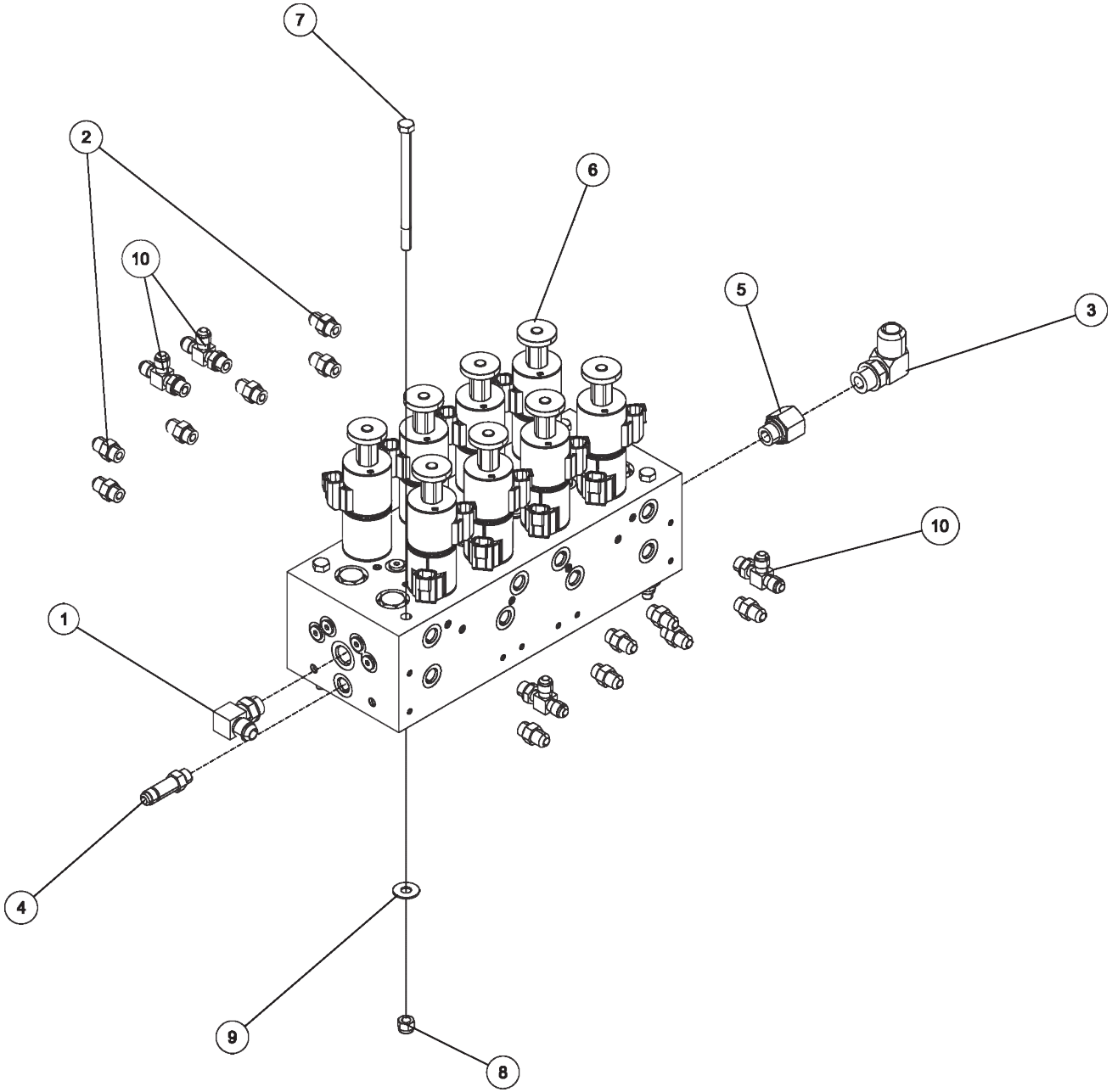

0910616 OUTRIGGER CONTROL VALVE (cont'd)

ITEM	PART NUMBER	DESCRIPTION	QTY
	0910616	OUTRIGGER CONTROL VALVE	
1	0301388	ELBOW, 8MJ-8MB90	1
2	0301522	ADAPTER, 6MJ-6MB	12
3	0302085	FITTING, 90 DEG ADPTR	1
4	0302510	ADAPTER, 6MJ-6MBL	1
5	0306633	FITTING, 8MB-10FB	1
6	0310358	VALVE,SOLENOID 12V OUTRIG CTRL	1
7	0400143	SCREW, 3/8-16X5-1/2 HHC GR5	4
8	0400392	NUT, 3/8-16 LOK	4
9	0400480	WASHER, 3/8	4
10	9012594	FITT,HYD RUN TEE, 6MJx6MBx6MJ	4

0910635 OUTRIGGER BLEED VALVE

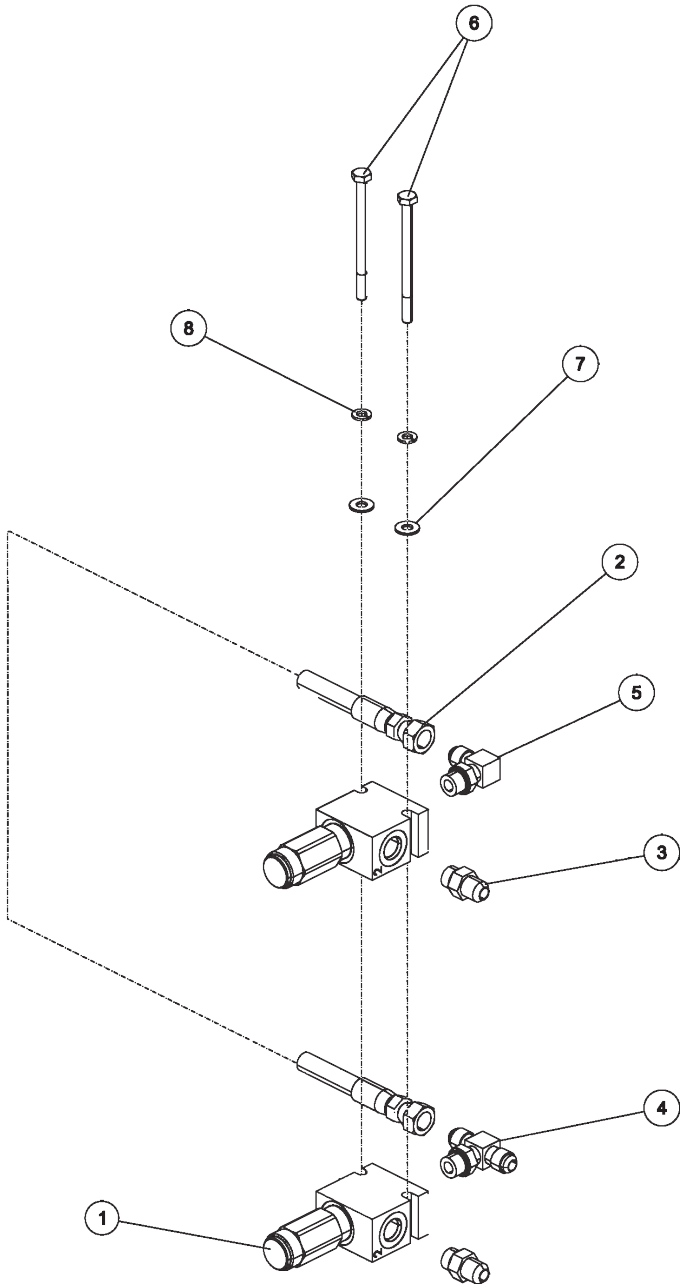

0910635 OUTRIGGER BLEED VALVE (cont'd)

ITEM	PART NUMBER	DESCRIPTION	QTY
	0910635	OUTRIGGER BLEED VALVE ASSEMBLY	
1	03000389	RELIEF VALVE, WALVOIL RV08	2
2	0301427	HOSE HYD, 11" 5000 PSI	1
3	0301522	ADAPTER, 6MJ-6MB	2
4	0301619	FITT, 6MJ-6MJ-6MB BRANCH TEE	1
5	0301620	FITTING, HYD. 6MJ - 6MB90	1
6	0400081	SCREW, 1/4-20X3-1/2 HHC GR5	2
7	0400451	WASHER, 1/4	2
8	0400452	LKWASHER, 1/4	2

0910915 FRONT VALVE MOUNTING

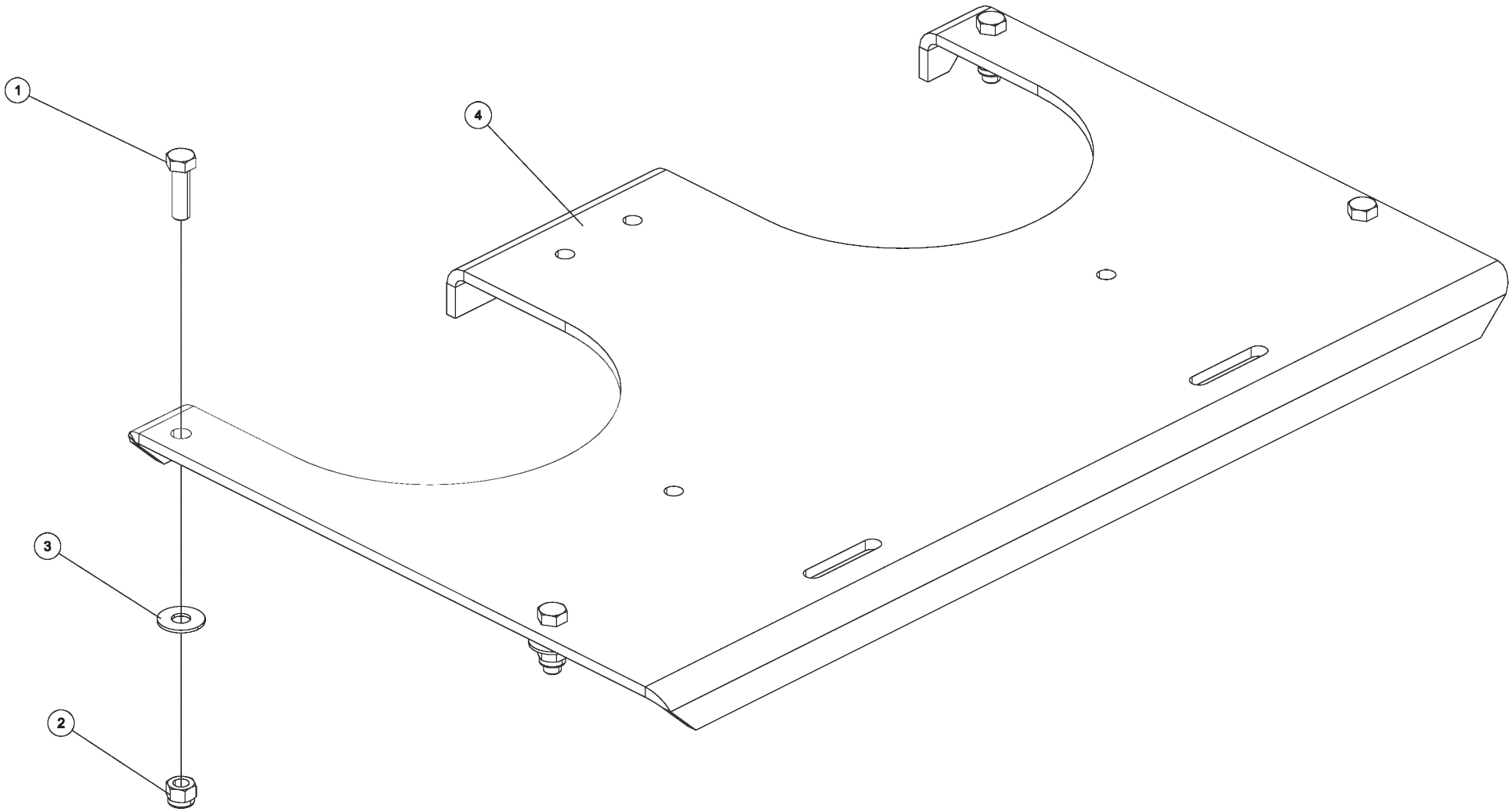

0910915 FRONT VALVE MOUNTING (cont'd)

ITEM	PART NUMBER	DESCRIPTION	QTY
	0910915	FRONT VALVE MOUNTING	
1	0400122	SCREW, 3/8-16X1-1/4 HHC GR5	4
2	0400392	NUT, 3/8-16 LOK	4
3	0400480	WASHER, 3/8	4
4	0723933	PLATE - FRONT VALVE MOUNTING	1

0906572 WINCH CABLE STOW

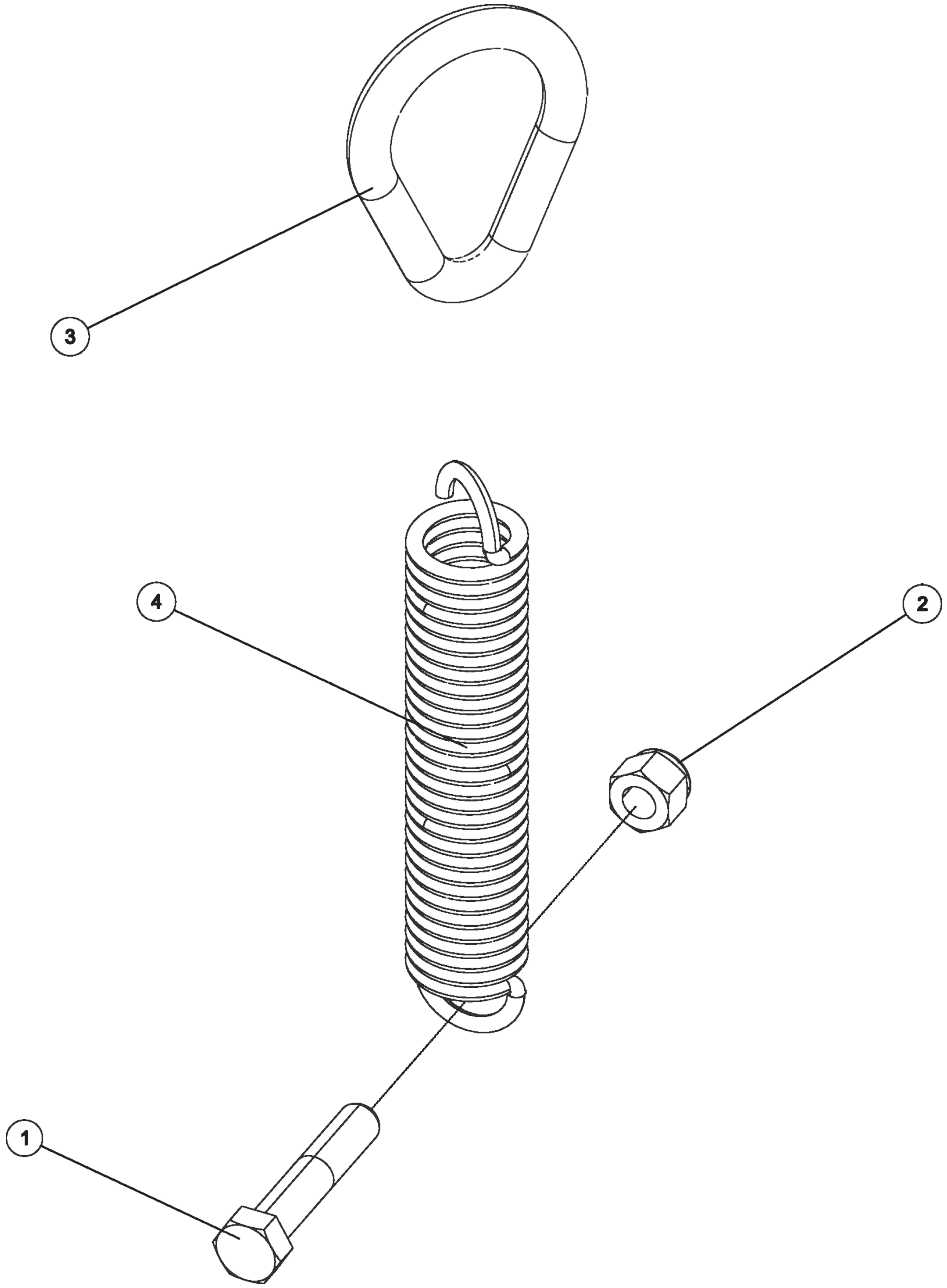

0906572 WINCH CABLE STOW (cont'd)

ITEM	PART NUMBER	DESCRIPTION	QTY
	0906572	WINCH CABLE STOW	
1	0400257	SCREW, 5/8-11X3-1/4 HHC GR5	1
2	0400421	NUT, 5/8-11 LOK	1
3	9048800	5/8 WELDLESS CHAIN LINK	1
4	945030007	CABLE TIE BACK SPRING-1	1

0908055 REVERSING SHEAVE

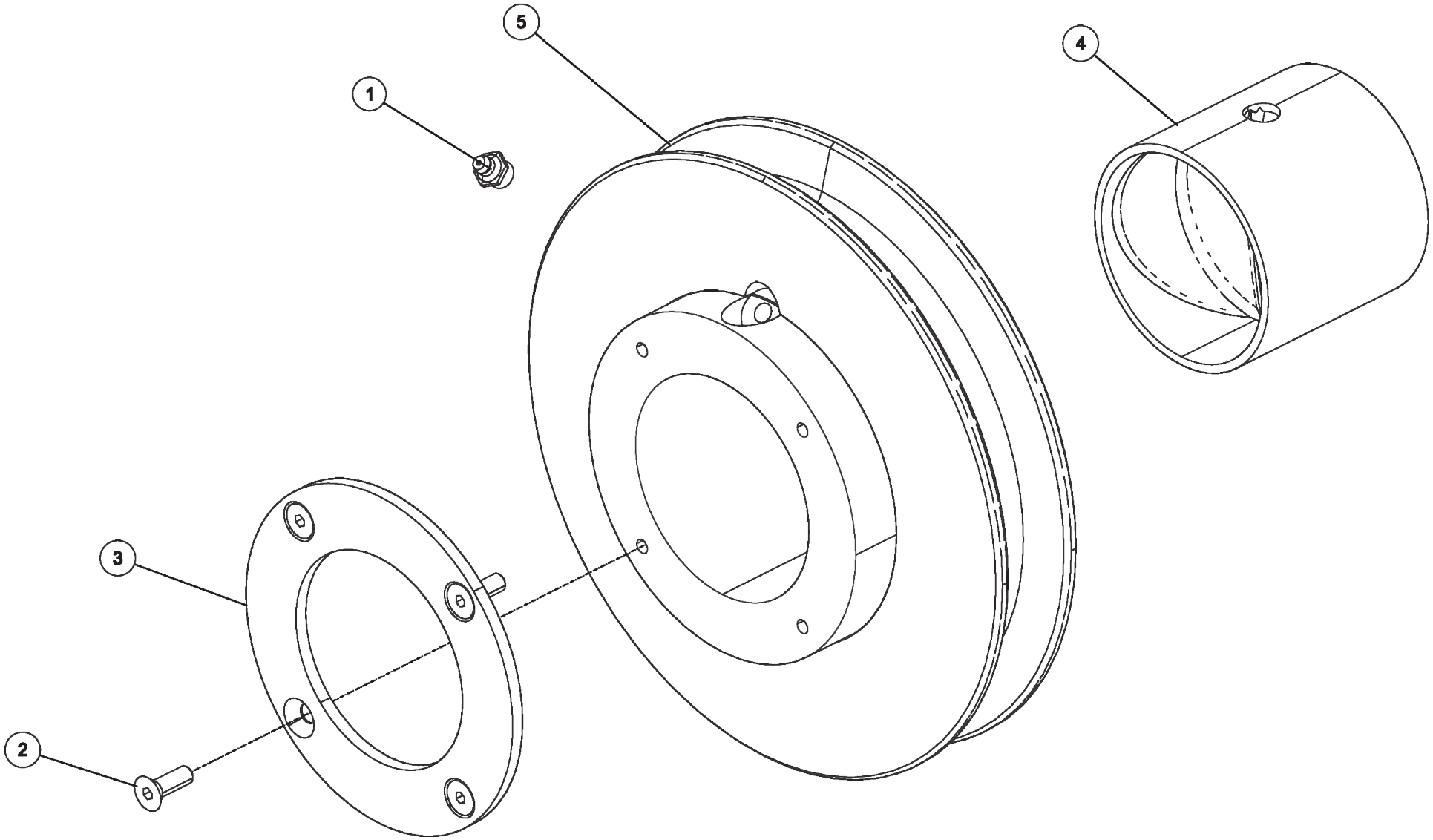

0908055 REVERSING SHEAVE (cont'd)

ITEM	PART NUMBER	DESCRIPTION	QTY
	0908055	REVERSING SHEAVE ASSEMBLY	
1	0301895	GREASE FITTING, 1/8 STR PTF	1
2	0400079	SCREW, 1/4-20X3/4 FHS GR5	8
3	0717748	PLATE, SHEAVE COVER	2
4	0718059	BUSHING, WITH HOLE (0306748)	1
5	0806736	FLEET SHEAVE WLD'T/MACH DRW	1

0908062 CABLE SHEAVE AND TENSIONER ASSEMBLY

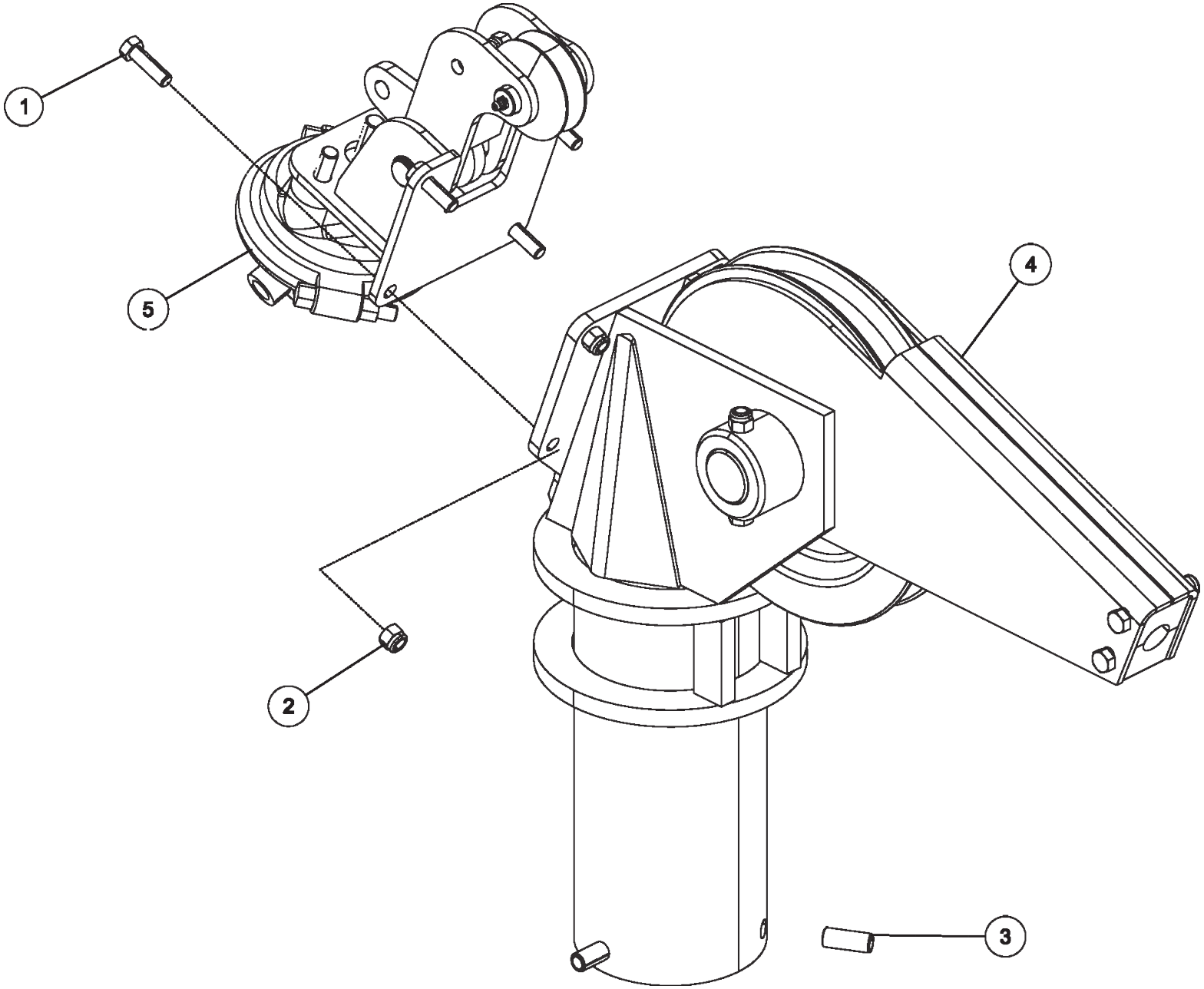

0908062 CABLE SHEAVE AND TENSIONER ASSEMBLY (cont'd)

ITEM	PART NUMBER	DESCRIPTION	QTY
	0908062	CABLE SHEAVE TENSIONER ASSEMBLY	
1	0400122	SCREW, 3/8-16X1-1/4 HHC GR5	4
2	0400392	NUT, 3/8-16 LOK	4
3	0400557	PIN, 1/2X1-1/4 SPR	3
4	0908054	CABLE SHEAVE SWIVEL ASSEMBLY	1
5	0908063	TENSIONER ASSEMBLY	1

0908054 CABLE, SHEAVE SWIVEL ASSEMBLY

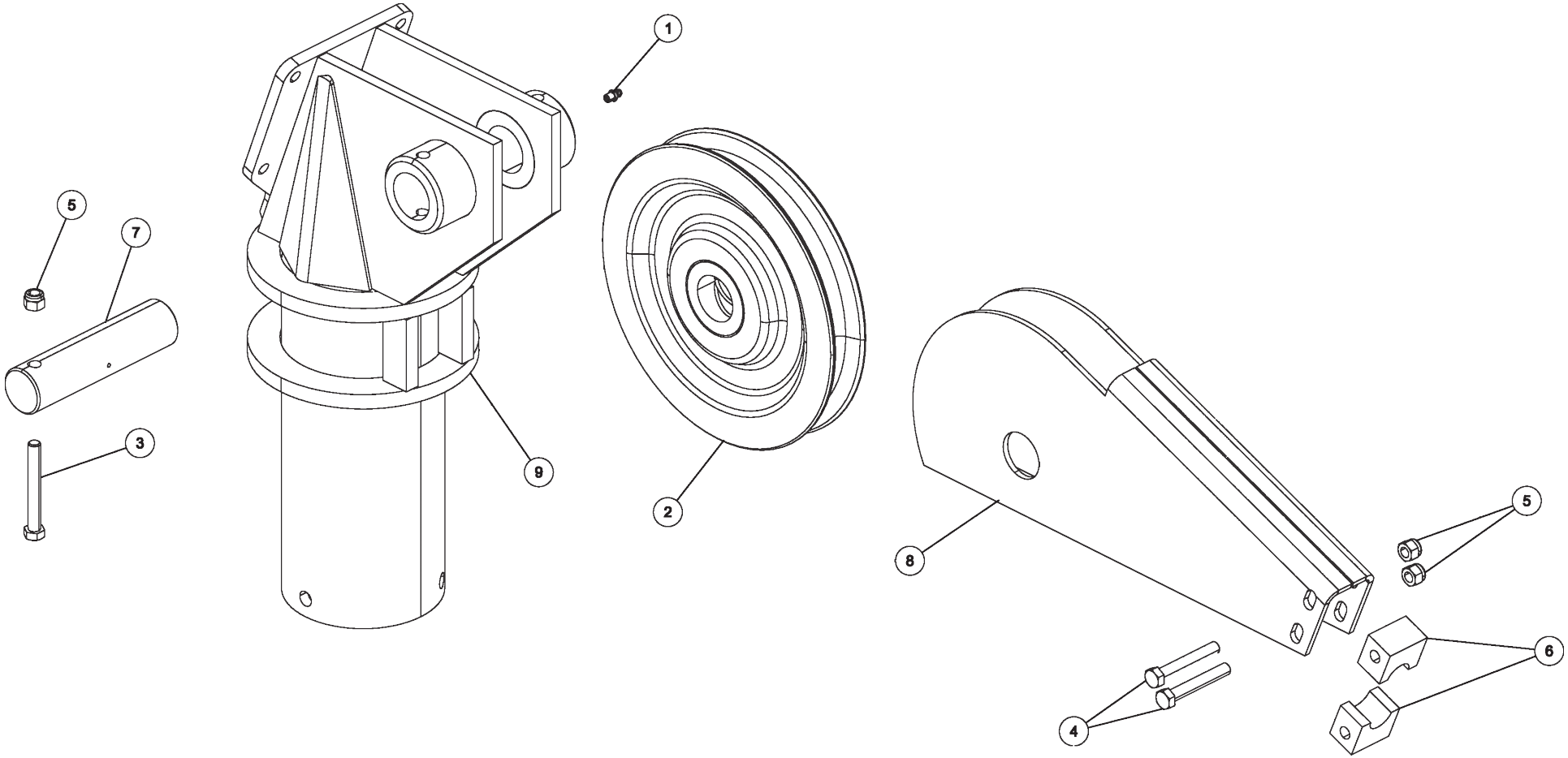

0908054 CABLE, SHEAVE SWIVEL ASSEMBLY (cont'd)

ITEM	PART NUMBER	DESCRIPTION	QTY
	09008054	CABLE SHEAVE SWIVEL ASSEMBLY	
1	0300113	GREASE FITTING, 1/4-28 STR	1
2	0303441	SHEAVE-10" DIA X 1.5 BORE	1
3	0400133	SCREW, 3/8-16X3 HHC GR5	1
4	0400150	SCREW, 3/8-16X2-1/2 HHC GR5	2
5	0400392	NUT, 3/8-16 LOK	3
6	0700801	GUIDE, BTM CABLE	2
7	0716134	SHEAVE SHAFT	1
8	0803313	GUIDE-CABLE WELDMENT	1
9	0810088	SHEAVE WLDMT	1

0908063 TENSIONER ASSEMBLY

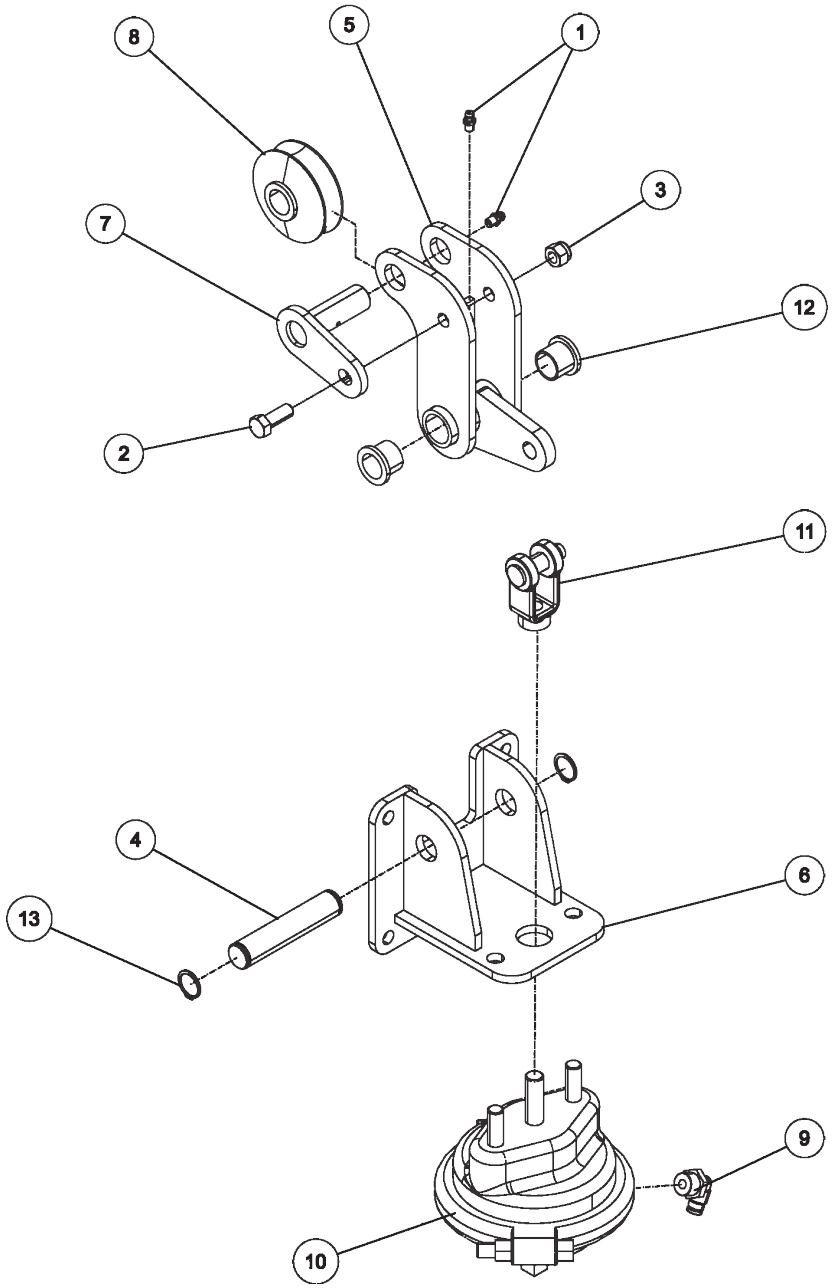

0908063 TENSIONER ASSEMBLY (cont'd)

ITEM	PART NUMBER	DESCRIPTION	QTY
	0908063	TENSIONER ASSEMBLY	
1	0300113	GREASE FITTING, 1/4-28 STR	2
2	0400126	SCREW, 3/8-16X1 HHC GR5	1
3	0400392	NUT, 3/8-16 LOK	1
4	0717832	PIN, TENSI0NER PIVOT	1
5	0806740	TENSIONER ARM WLD'T	1
6	0806741	TENSIONER MOUNTING BRACKET	1
7	0806742	PIN - TENSIONER ROLLER	1
8	0908064	TENSIONER ROLLER	1
9	9012553	BRASS ELBOW LEGRIS 3109-	1
10	9018141	DIAPHRAM CYL. KN36090	1
11	9048450	YOKE-GREEN BAY B-371 1/	1
12	9053524	BEARING BR. FLG.752 X .879x.75	2
13	HD0160	SNAP RING, 3/4EXTERNAL	2

0908432 ROTATOR PINLOCK ASSEMBLY

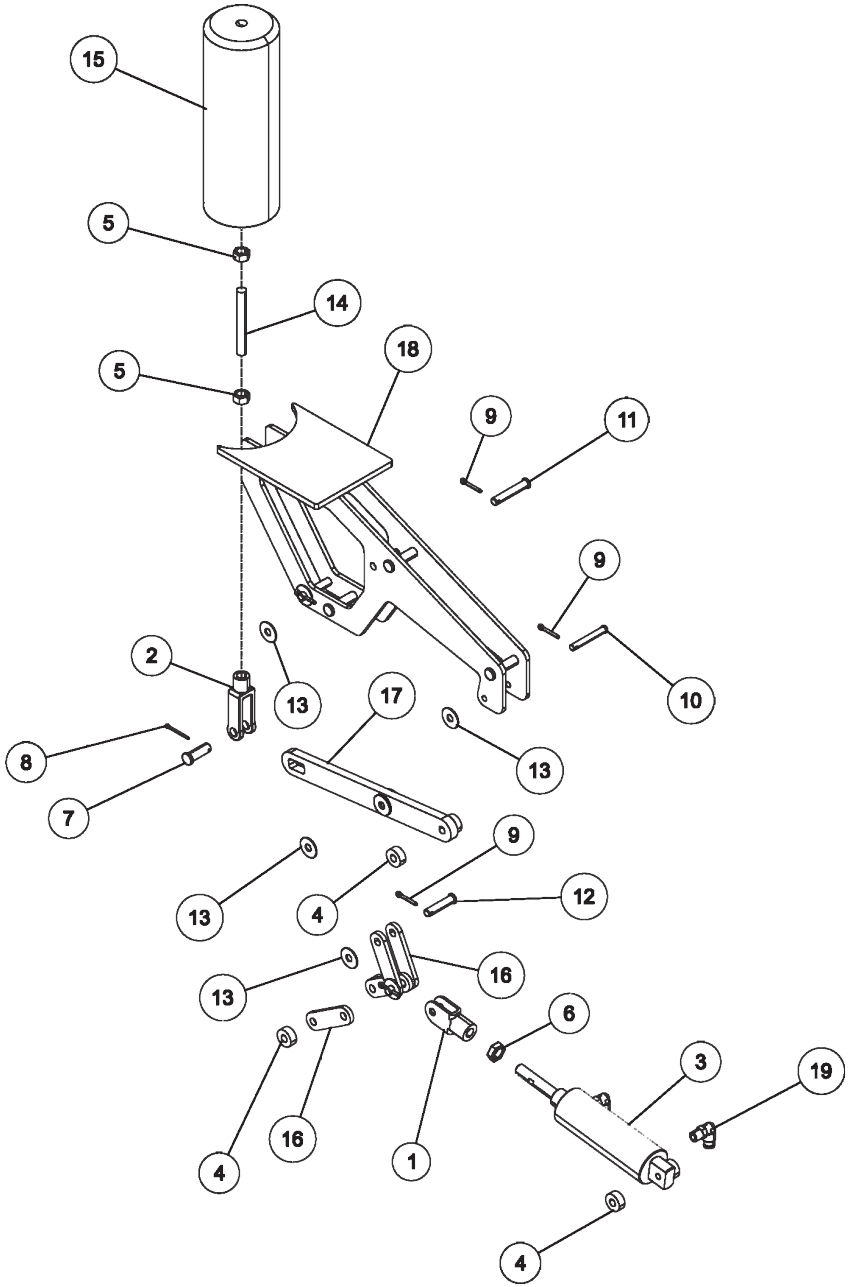

0908432 ROTATOR PINLOCK ASSEMBLY (cont'd)

ITEM	PART NUMBER	DESCRIPTION	QTY
	0908432	ROTATOR PINLOCK ASSEMBLY	
1	0200052	CLEVIS LINK	1
2	0302231	ADJ CLEVIS 3/8" AC-218	1
3	0306698	AIR CYLINDER-1.5BORE/1.71STROK	1
4	0307612	NYLON SPACER,5/16 THK X 5/16ID	6
5	0400388	NUT, 3/8-24 HEX	2
6	0400401	NUT, 7/16-20 JAM PL	1
7	0400538	PIN, 3/8X1 CLEVIS	1
8	0400540	PIN, 3/32X1 COT	1
9	0400543	PIN, 1/8X3/4 COT SS	5
10	0400663	PIN, 1/4X1-3/4 CLEVIS	1
11	0400664	PIN, 5/16X1-3/4 CLEVIS	2
12	0400666	PIN, 5/16X1-3/8 CLEVIS SS	2
13	0402117	WASHER, 5/16 SS	11
14	0705698	ALLTHREAD, CONNECTOR	1
15	0709331	PIN, RETAIN HOUSE LOCK	1
16	0718297	BAR LINK - PIN LOCK	4
17	0718298	BAR LEVER - PIN LOCK	1
18	0806871	PIN LOCK WELD'T	1
19	9010030	FITT, BRASS ELBOW 1/4T-1/8MPX	2

0911959 D-RING PARTS

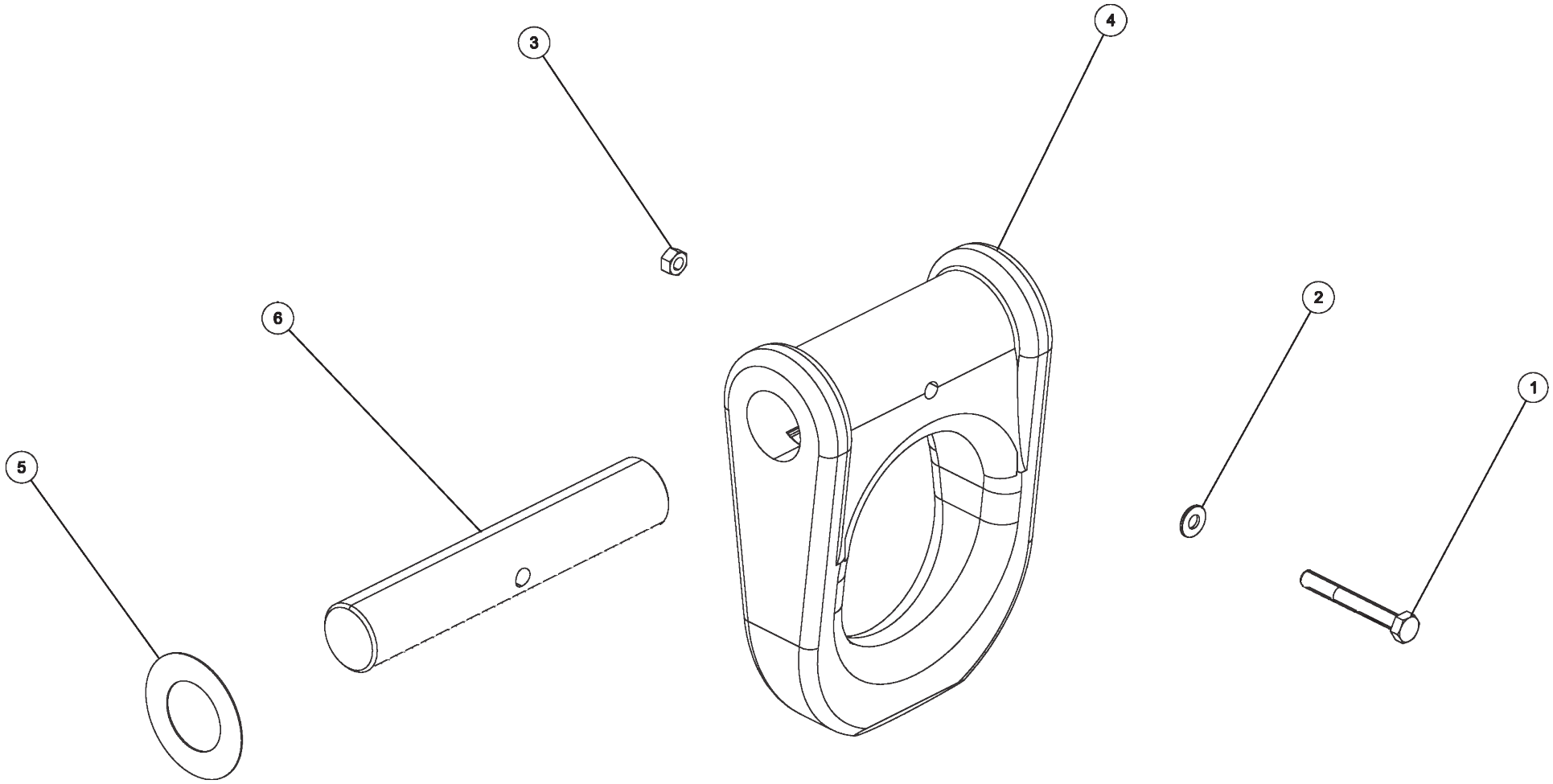

0911959 D-RING PARTS (cont'd)

ITEM	PART NUMBER	DESCRIPTION	QTY
	0911959	KIT, DRING PARTS	
1	0400107	SCREW, 5/16-18X2-1/2 HHC GR5	1
2	0400451	WASHER, 1/4	1
3	0727124	TAILGATE D-RING SPACER	1
4	GA0215	PIN-"D" RING	1
5	0719585	D-RING, TOWING	1
6	0400776	NUT, 5/16-18 JAM LOK	1

24679012 LH LEG ASSEMBLY

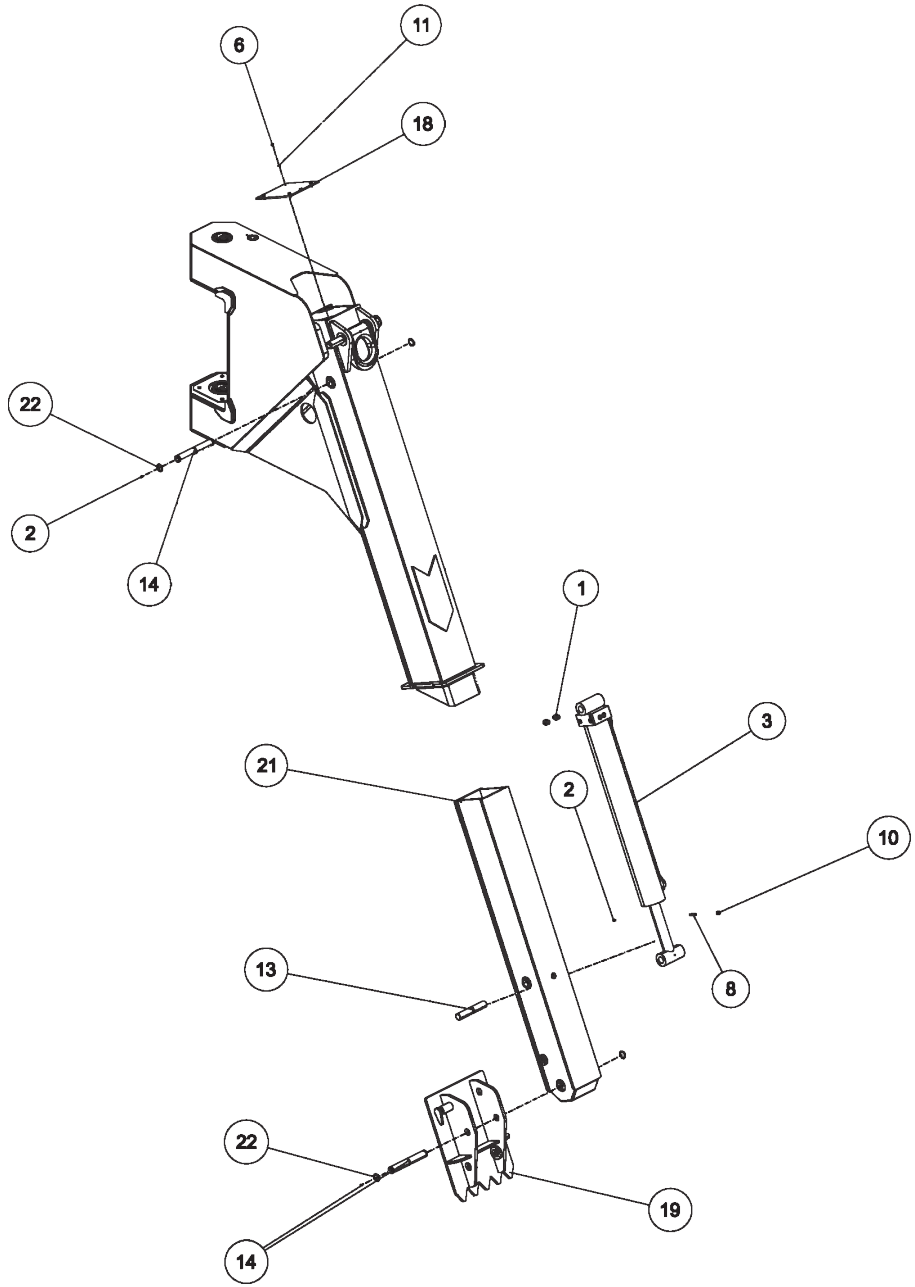

24679012 LH LEG ASSEMBLY (cont'd)

ITEM	PART NUMBER	DESCRIPTION	QTY
	24679012	LH LEG ASSEMBLY	
1	0300044	FITT, HYD CONN. 6MJ-8MB	2
2	0300113	GREASE FITTING, 1/4-28 STR	3
3	03008128	CYLINDER, RXP LEG EXTEND	1
4	03010029	BUSHING, AL BZ 3.0X2.5X1.9	4
5	0301861	QUICK PIN,LINCH -B7932 PL 7/16	1
6	0400066	SCREW, 1/4-20X3/4 HHC GR5	4
7	0400079	SCREW, 1/4-20X3/4 FHS GR5	8
8	0400139	SET SCREW, 3/8-16X1-1/2 SOC	1
9	0400176	SCREW, 1/2-13X1 HHC GR5	2
10	0400392	NUT, 3/8-16 LOK	1
11	0400452	LKWASHER, 1/4	4
12	0400491	LKWASHER, 1/2	2
13	0713129	SHAFT, UPPER SPADE	1
14	0713510	PIN, CYL SIDEWNDR	2
15	0717797	PAD, THRUST SIDEWINDER LEG	2
16	0719585	D-RING, TOWING	1
17	0803923	PIN WLDT - D RING	1
18	22907002	PLATE - TUBE END	1
19	22909009	FOOT ASSEMBLY (LH) -SIDEWINDER	1
20	24678001	OUTER LEG WELDMENT LH	1
21	24678004	INNER LEG WELDMENT	1
22	9056125	1.25 NOM HVY DUTY RET RING EXT	4
23	930020001	SPACER PLATE STIFFLEG SU	1

24679012 LH LEG ASSEMBLY (cont'd)

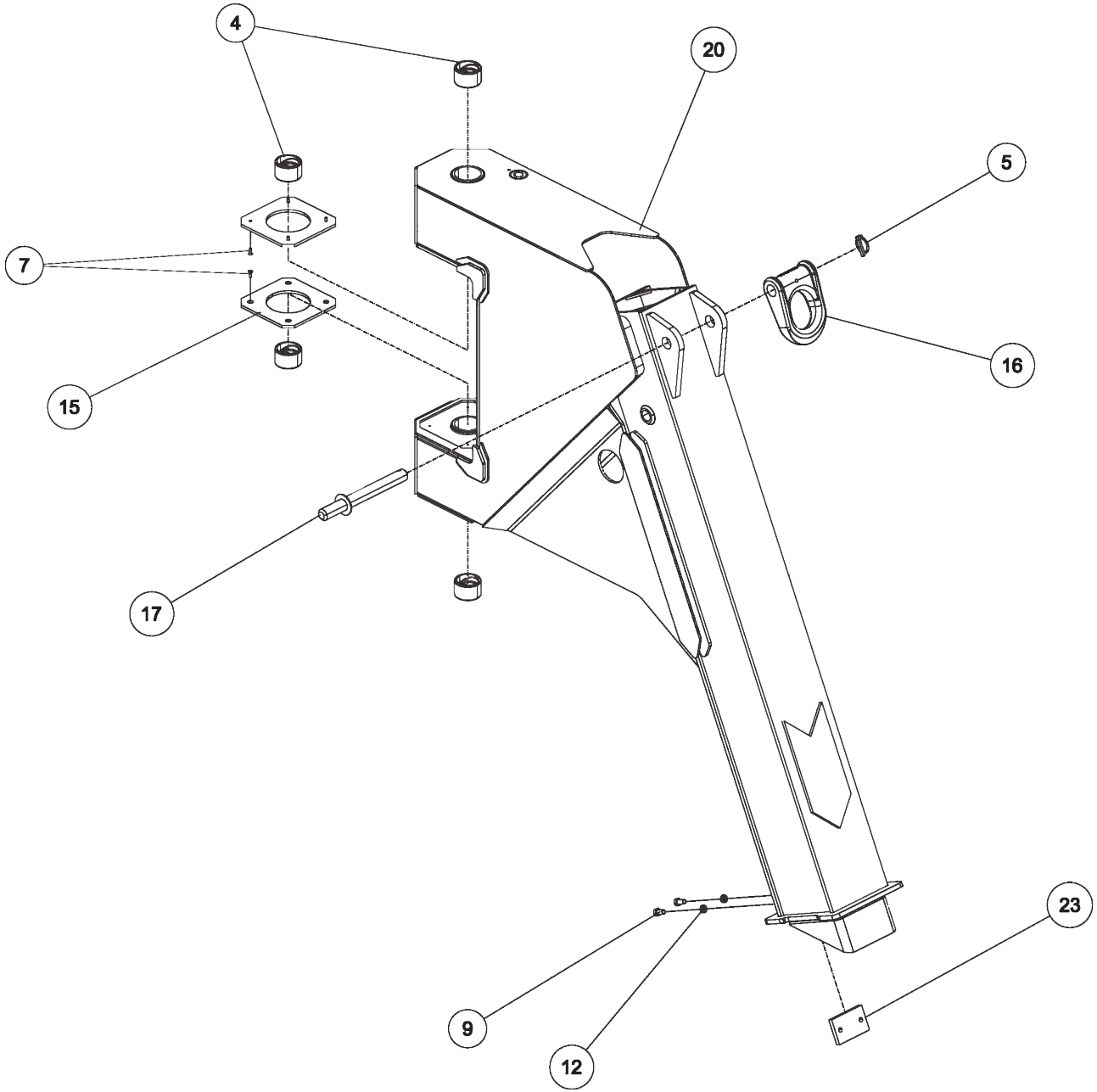

24679012 LH LEG ASSEMBLY (cont'd)

ITEM	PART NUMBER	DESCRIPTION	QTY
	24679012	LH LEG ASSEMBLY	
1	0300044	FITT, HYD CONN. 6MJ-8MB	2
2	0300113	GREASE FITTING, 1/4-28 STR	3
3	03008128	CYLINDER, RXP LEG EXTEND	1
4	03010029	BUSHING, AL BZ 3.0X2.5X1.9	4
5	0301861	QUICK PIN,LINCH -B7932 PL 7/16	1
6	0400066	SCREW, 1/4-20X3/4 HHC GR5	4
7	0400079	SCREW, 1/4-20X3/4 FHS GR5	8
8	0400139	SET SCREW, 3/8-16X1-1/2 SOC	1
9	0400176	SCREW, 1/2-13X1 HHC GR5	2
10	0400392	NUT, 3/8-16 LOK	1
11	0400452	LKWASHER, 1/4	4
12	0400491	LKWASHER, 1/2	2
13	0713129	SHAFT, UPPER SPADE	1
14	0713510	PIN, CYL SIDEWNDR	2
15	0717797	PAD, THRUST SIDEWINDER LEG	2
16	0719585	D-RING, TOWING	1
17	0803923	PIN WLDT - D RING	1
18	22907002	PLATE - TUBE END	1
19	22909009	FOOT ASSEMBLY (LH) -SIDEWINDER	1
20	24678001	OUTER LEG WELDMENT LH	1
21	24678004	INNER LEG WELDMENT	1
22	9056125	1.25 NOM HVY DUTY RET RING EXT	4
23	930020001	SPACER PLATE STIFFLEG SU	1

24679013 RH LEG ASSEMBLY

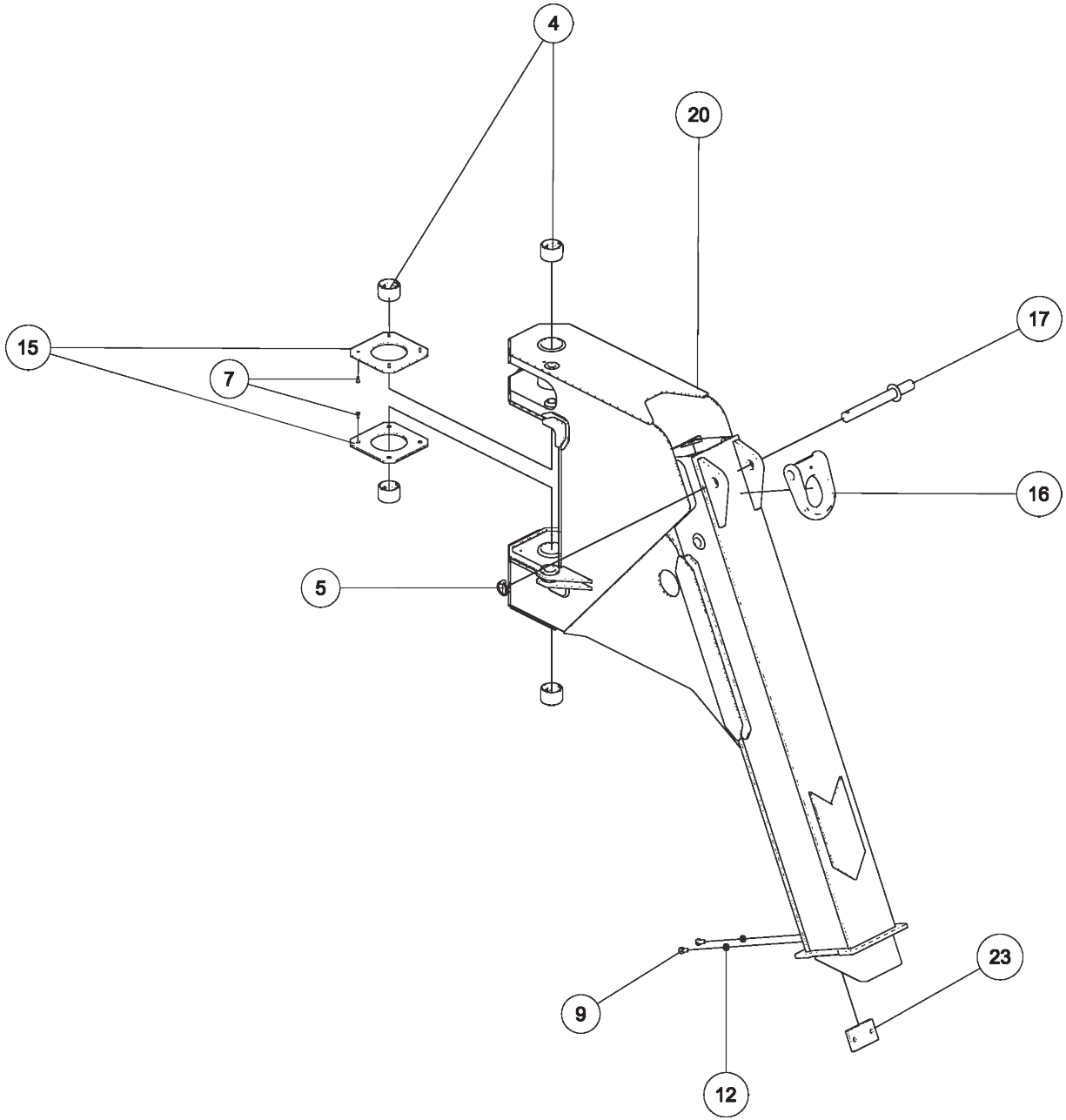

24679013 RH LEG ASSEMBLY (cont'd)

ITEM	PART NUMBER	DESCRIPTION	QTY
	24679013	RH LEG ASSEMBLY	
1	0300044	FITT, HYD CONN. 6MJ-8MB	2
2	0300113	GREASE FITTING, 1/4-28 STR	3
3	03008128	CYLINDER, RXP LEG EXTEND	1
4	0301861	QUICK PIN,LINCH -B7932 PL 7/16	1
5	0400066	SCREW, 1/4-20X3/4 HHC GR5	4
6	0400079	SCREW, 1/4-20X3/4 FHS GR5	8
7	0400139	SET SCREW, 3/8-16X1-1/2 SOC	1
8	0400176	SCREW, 1/2-13X1 HHC GR5	2
9	0400392	NUT, 3/8-16 LOK	1
10	0400452	LKWASHER, 1/4	4
11	0400491	LKWASHER, 1/2	2
12	0713129	SHAFT, UPPER SPADE	1
13	0713510	PIN, CYL SIDEWNDR	2
14	0717797	PAD, THRUST SIDEWINDER LEG	2
15	0719585	D-RING, TOWING	1
16	0803923	PIN WLDT - D RING	1
17	22907002	PLATE - TUBE END	1
18	22909010	FOOT ASSEMBLY (RH) -SIDEWINDER	1
19	24678002	OUTER LEG WELDMENT RH	1
20	24678004	INNER LEG WELDMENT	1
21	9056125	1.25 NOM HVY DUTY RET RING EXT	4
22	930020001	SPACER PLATE STIFFLEG SU	1

24679013 RH LEG ASSEMBLY (cont'd)

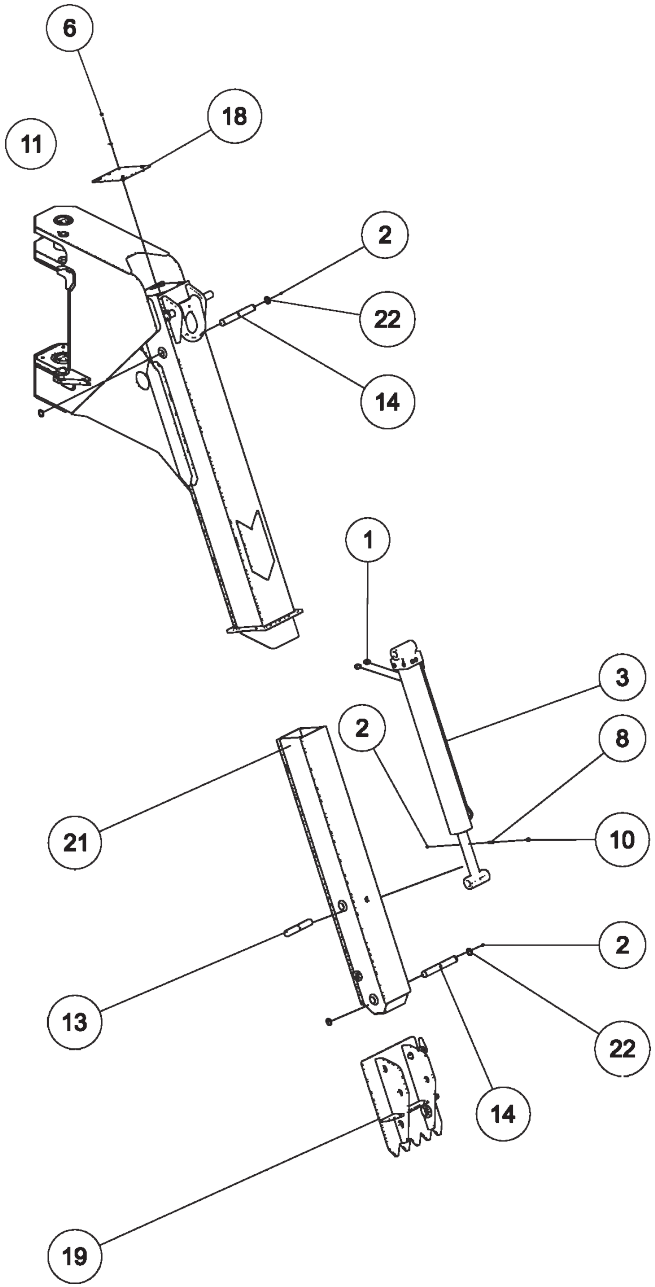

24679013 RH LEG ASSEMBLY (cont'd)

ITEM	PART NUMBER	DESCRIPTION	QTY
	24679013	RH LEG ASSEMBLY	
1	0300044	FITT, HYD CONN. 6MJ-8MB	2
2	0300113	GREASE FITTING, 1/4-28 STR	3
3	03008128	CYLINDER, RXP LEG EXTEND	1
4	0301861	QUICK PIN,LINCH -B7932 PL 7/16	1
5	0400066	SCREW, 1/4-20X3/4 HHC GR5	4
6	0400079	SCREW, 1/4-20X3/4 FHS GR5	8
7	0400139	SET SCREW, 3/8-16X1-1/2 SOC	1
8	0400176	SCREW, 1/2-13X1 HHC GR5	2
9	0400392	NUT, 3/8-16 LOK	1
10	0400452	LKWASHER, 1/4	4
11	0400491	LKWASHER, 1/2	2
12	0713129	SHAFT, UPPER SPADE	1
13	0713510	PIN, CYL SIDEWNDR	2
14	0717797	PAD, THRUST SIDEWINDER LEG	2
15	0719585	D-RING, TOWING	1
16	0803923	PIN WLDT - D RING	1
17	22907002	PLATE - TUBE END	1
18	22909010	FOOT ASSEMBLY (RH) -SIDEWINDER	1
19	24678002	OUTER LEG WELDMENT RH	1
20	24678004	INNER LEG WELDMENT	1
21	9056125	1.25 NOM HVY DUTY RET RING EXT	4
22	930020001	SPACER PLATE STIFFLEG SU	1

25559013 RESERVOIR ASSEMBLY

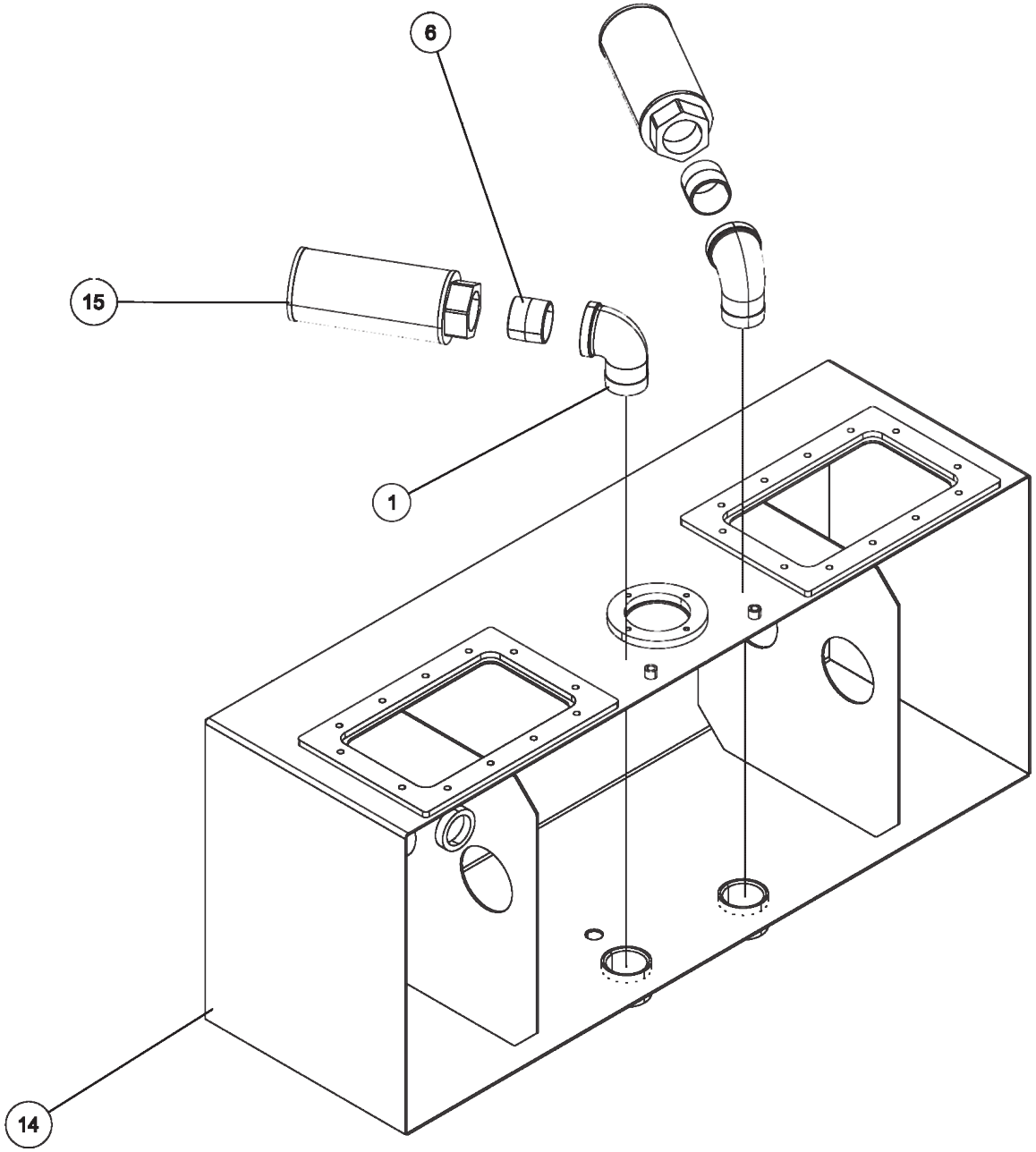

25559013 RESERVOIR ASSEMBLY (cont'd)

ITEM	PART NUMBER	DESCRIPTION	QTY
	25559013	RESERVOIR ASSEMBLY	
1	0300593	FITTING, 2BL STREET	2
2	0301541	SIGHT GAGE, TYPE SVM-24	1
3	0302227	CENTER BONDED MOUNT	4
4	0302228	SPECIAL WASHER (LORD	4
5	0303155	PIPE PLUG 3/4 NPT MAGNETIC	1
6	0310204	NIPPLE, 2 CLOSE	2
7	0310296	FILTR HEAD ASSY W' ELEMENT	1
8	0310429	TANK COVER - FILTER & FILLER	1
9	0310430	TANK COVER & FILTER	1
10	0400126	SCREW, 3/8-16X1 HHC GR5	24
11	0400150	SCREW, 3/8-16X2-1/2 HHC GR5	4
12	0400392	NUT, 3/8-16 LOK	4
13	0400482	LKWASHER, 3/8	24
14	25558014	RESERVOIR WELDMENT-SPO	1
15	HC0634	STRAINER/FILTER	2

25559013 RESERVOIR ASSEMBLY (cont'd)

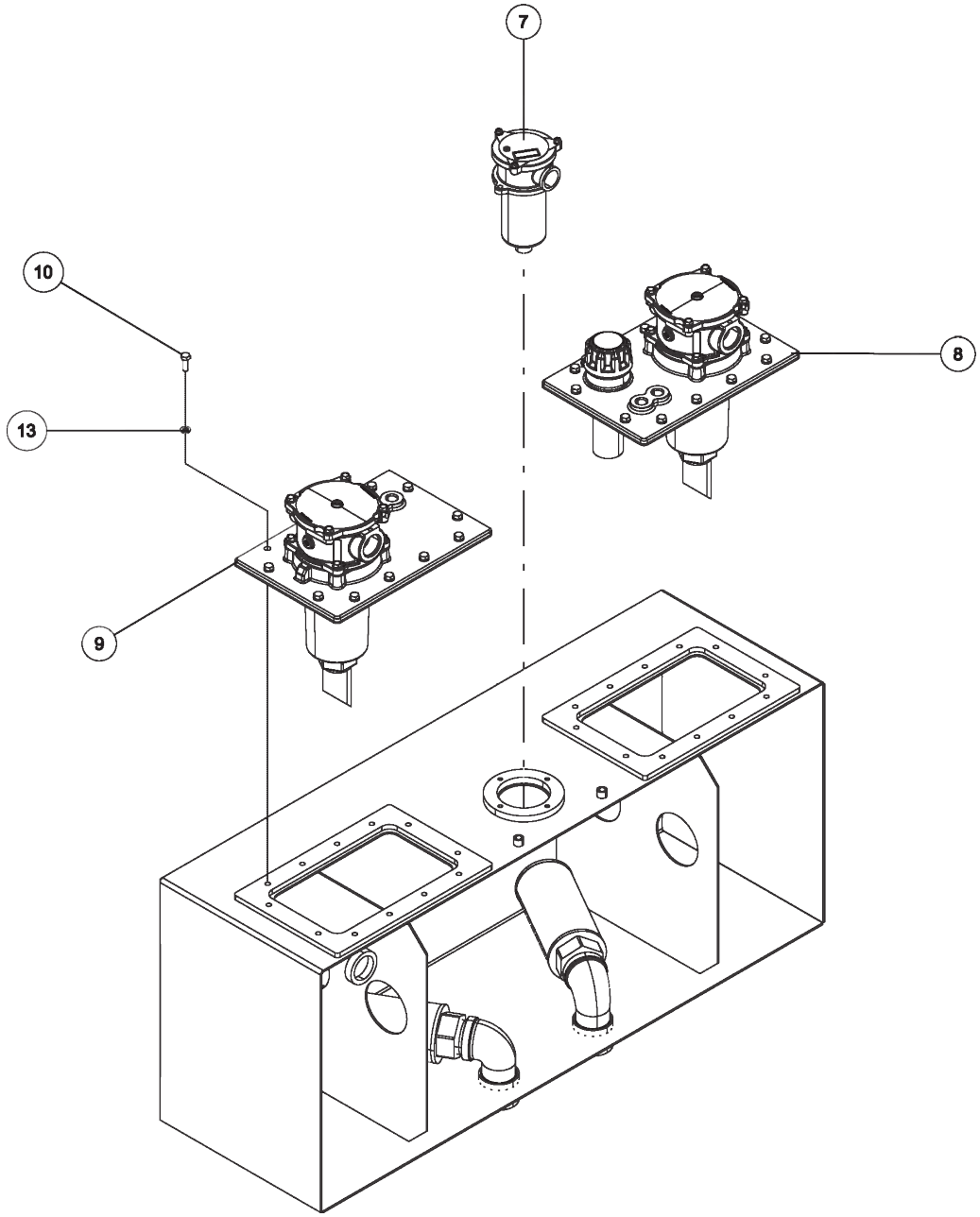

25559013 RESERVOIR ASSEMBLY (cont'd)

ITEM	PART NUMBER	DESCRIPTION	QTY
	25559013	RESERVOIR ASSEMBLY	
1	0300593	FITTING, 2BL STREET	2
2	0301541	SIGHT GAGE, TYPE SVM-24	1
3	0302227	CENTER BONDED MOUNT	4
4	0302228	SPECIAL WASHER (LORD	4
5	0303155	PIPE PLUG 3/4 NPT MAGNETIC	1
6	0310204	NIPPLE, 2 CLOSE	2
7	0310296	FILTR HEAD ASSY W' ELEMENT	1
8	0310429	TANK COVER - FILTER & FILLER	1
9	0310430	TANK COVER & FILTER	1
10	0400126	SCREW, 3/8-16X1 HHC GR5	24
11	0400150	SCREW, 3/8-16X2-1/2 HHC GR5	4
12	0400392	NUT, 3/8-16 LOK	4
13	0400482	LKWASHER, 3/8	24
14	25558014	RESERVOIR WELDMENT-SPO	1
15	HC0634	STRAINER/FILTER	2

25559013 RESERVOIR ASSEMBLY (cont'd)

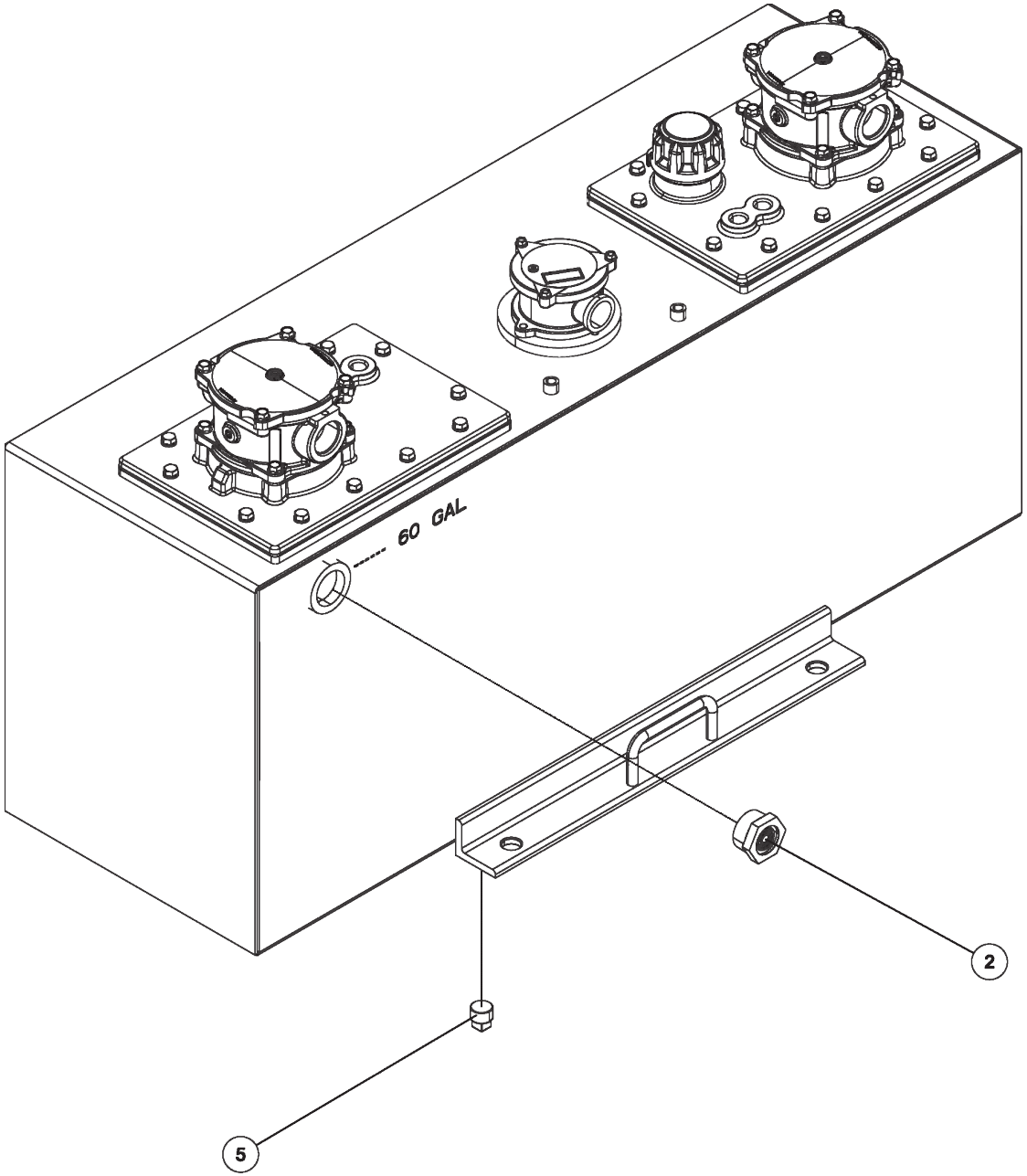

25559013 RESERVOIR ASSEMBLY (cont'd)

ITEM	PART NUMBER	DESCRIPTION	QTY
	25559013	RESERVOIR ASSEMBLY	
1	0300593	FITTING, 2BL STREET	2
2	0301541	SIGHT GAGE, TYPE SVM-24	1
3	0302227	CENTER BONDED MOUNT	4
4	0302228	SPECIAL WASHER (LORD	4
5	0303155	PIPE PLUG 3/4 NPT MAGNETIC	1
6	0310204	NIPPLE, 2 CLOSE	2
7	0310296	FILTR HEAD ASSY W' ELEMENT	1
8	0310429	TANK COVER - FILTER & FILLER	1
9	0310430	TANK COVER & FILTER	1
10	0400126	SCREW, 3/8-16X1 HHC GR5	24
11	0400150	SCREW, 3/8-16X2-1/2 HHC GR5	4
12	0400392	NUT, 3/8-16 LOK	4
13	0400482	LKWASHER, 3/8	24
14	25558014	RESERVOIR WELDMENT-SPO	1
15	HC0634	STRAINER/FILTER	2

25559013 RESERVOIR ASSEMBLY (cont'd)

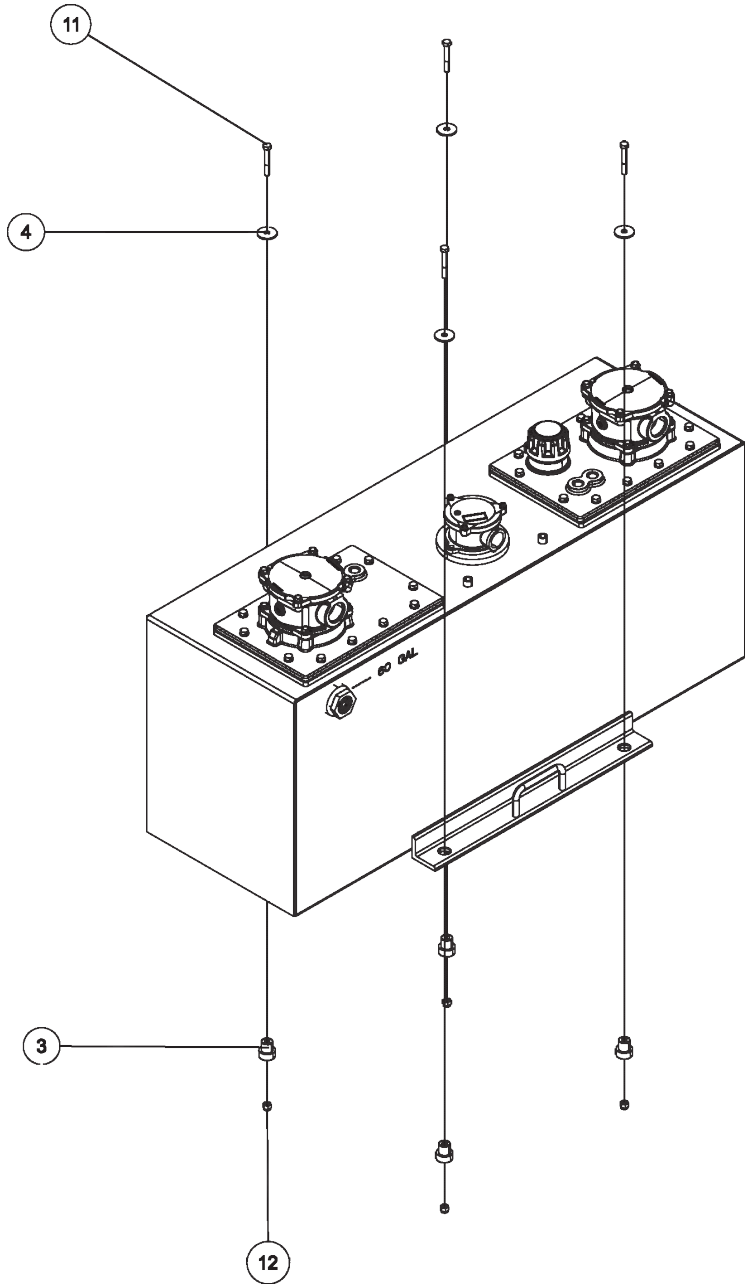

25559013 RESERVOIR ASSEMBLY (cont'd)

ITEM	PART NUMBER	DESCRIPTION	QTY
	25559013	RESERVOIR ASSEMBLY	
1	0300593	FITTING, 2BL STREET	2
2	0301541	SIGHT GAGE, TYPE SVM-24	1
3	0302227	CENTER BONDED MOUNT	4
4	0302228	SPECIAL WASHER (LORD	4
5	0303155	PIPE PLUG 3/4 NPT MAGNETIC	1
6	0310204	NIPPLE, 2 CLOSE	2
7	0310296	FILTR HEAD ASSY W' ELEMENT	1
8	0310429	TANK COVER - FILTER & FILLER	1
9	0310430	TANK COVER & FILTER	1
10	0400126	SCREW, 3/8-16X1 HHC GR5	24
11	0400150	SCREW, 3/8-16X2-1/2 HHC GR5	4
12	0400392	NUT, 3/8-16 LOK	4
13	0400482	LKWASHER, 3/8	24
14	25558014	RESERVOIR WELDMENT-SPO	1
15	HC0634	STRAINER/FILTER	2

0906532 SWIVEL - BOOM ASSEMBLY

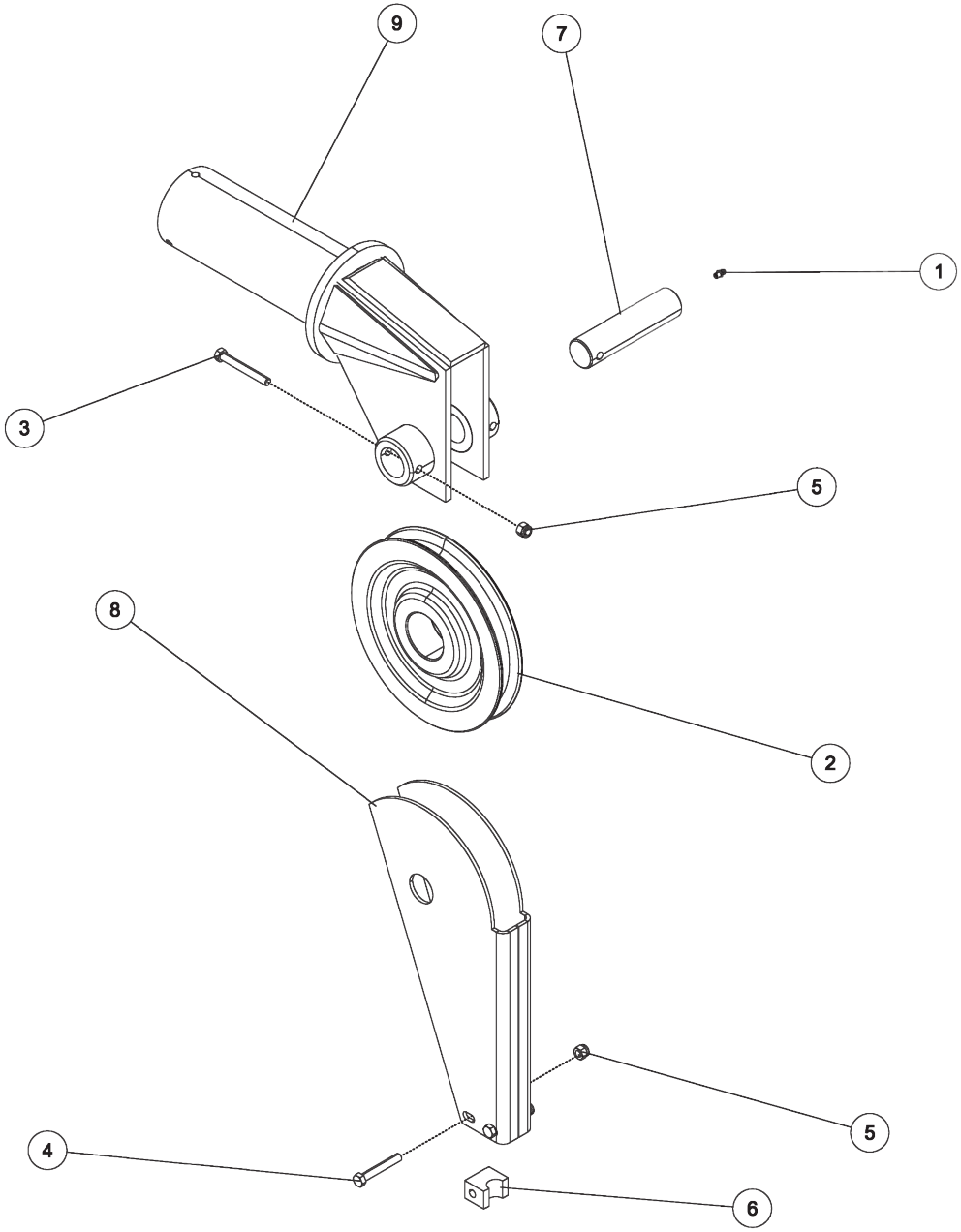

0906532 SWIVEL - BOOM ASSEMBLY (cont'd)

ITEM	PART NUMBER	DESCRIPTION	QTY
	0906532	SWIVEL BOOM ASSEMBLY	
1	0300113	GREASE FITTING, 1/4-28 STR	1
2	0303441	SHEAVE-10" DIA X 1.5 BORE	1
3	0400133	SCREW, 3/8-16X3 HHC GR5	1
4	0400150	SCREW, 3/8-16X2-1/2 HHC GR5	2
5	0400392	NUT, 3/8-16 LOK	3
6	0700801	GUIDE, BTM CABLE	2
7	0716134	SHEAVE SHAFT	1
8	0803313	GUIDE-CABLE WELDMENT	1
9	0804449	BOOM END SWIVEL WLDT-INTEGRATD	1

0908418 MUDFLAP CENTURY ROTATOR

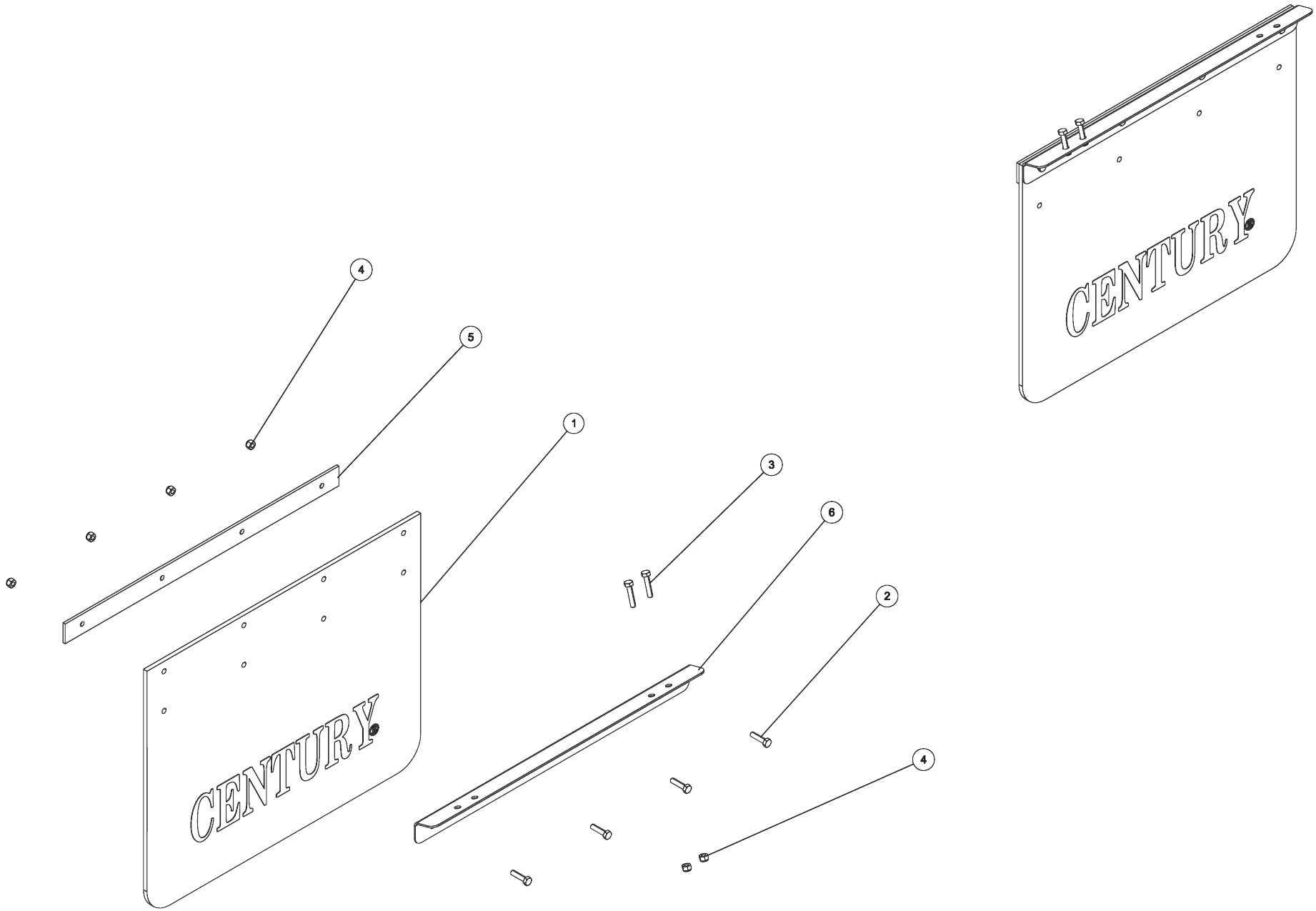

0908418 MUDFLAP CENTURY ROTATOR (cont'd)

ITEM	PART NUMBER	DESCRIPTION	QTY
	0908418	KIT, MUDFLAP CENTURY ROTATOR	
1	0310631	MUD FLAP, CENTURY	2
2	0400103	SCREW, 5/16-18X1-1/4 HHC GR5	8
3	0400104	SCREW, 5/16-18X1-1/2 HHC GR5	4
4	0400382	NUT, 5/16-18 LOK	12
5	0717386	BAR - MUDFLAP	2
6	0718264	ANGLE, ROTATOR MUD FLAP MOUNT	2

0910231 BOOM ASSEMBLY 1140 3-STAGE

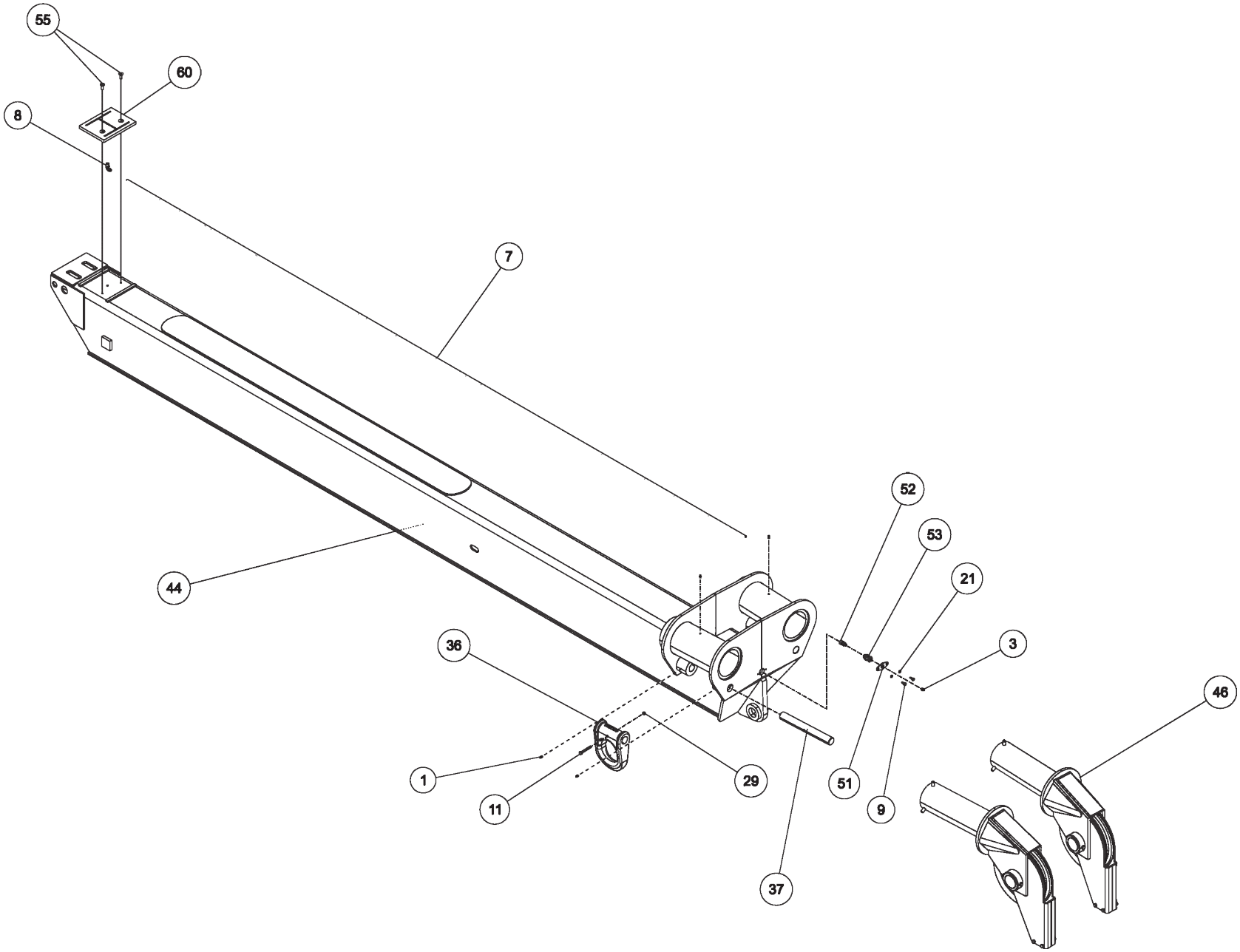

0910231 BOOM ASSEMBLY 1140 3-STAGE (cont'd)

ITEM	PART NUMBER	DESCRIPTION	QTY
	0910231	BOOM ASSEMBLY 1140 3 STAGE	
1	0300113	GREASE FITTING, 1/4-28 STR	14
2	0301529	HOSE HYD, 58	2
3	0301895	GREASE FITTING, 1/8 STR PTF	1
4	0305023	SNAP RING 5100-0225PP	2
5	0307403	CABLE - ASSY (RETRACT) 3-STAGE	2
6	0307406	PAD, SLIDE - (3) STAGE 9055	1
7	0311460	1/4" GREASE TUBING	15
8	0311575	1/4x1/4 PTC SWIVEL MALE ELBOW	1
9	0400059	SCREW, 1/4-20X5/8 HHC GR5	2
10	0400076	SCREW, 1/4-20X2-1/4 HHC GR5	2
11	0400107	SCREW, 5/16-18X2-1/2 HHC GR5	2
12	0400132	SCREW, 3/8-16X1-1/2 HHC GR5	8
13	0400133	SCREW, 3/8-16X3 HHC GR5	2
14	0400177	SCREW, 1/2-13X1-1/4 HHC GR5	4
15	0400349	SCREW, 3/8-16X3/4 FHS BO	8
16	0400367	NUT, 1/4-20 LOK	2
17	0400392	NUT, 3/8-16 LOK	10
18	0400408	NUT, 1/2-13 LOK	4
19	0400426	NUT, 5/8-11 LOK GR8	2
20	0400448	NUT, 1-1/4-12X1/2 JAM	2
21	0400452	LKWASHER, 1/4	2
22	0400461	NUT, 1-1/4-12 HEX GR8 PL	2
23	0400471	NUT, 7/8-14 HEX GR8	2
24	0400472	NUT, 7/8-14 JAM GR8	2
25	0400473	WASHER, 7/8 PL GR8	2
26	0400501	WASHER, 1-1/4 SAE PL	2
27	0400503	WASHER, 5/8 GR8	2
28	0400587	PIN, 1/4X1-1/2 SPR	2
29	0400776	NUT, 5/16-18 JAM LOK	2
30	0705104	PLATE, WINCH CABLE SPPT	1

ITEM	PART NUMBER	DESCRIPTION	QTY
31	0706042	WING, CABLE LONG 1040&1040B	2
32	0706043	WING, CABLE MED 1040&1040B	1
33	0712380	D-RING	4
34	0717744	PIN, EXTEND CYL. BASE	1
35	0717747	PIN, RETRACT CABLE	1
36	0719585	D-RING, TOWING	2
37	0722067	PIN, D-RING	2
38	0722817	PIN	1
39	0722820	PIN	1
40	0726426	PLATE-PIN KEEPER	2
41	0806752	SHAFT-RETRACT SHEAVE WELD'T	4
42	0807402	OUTER BOOM WELDMENT	1
43	0807403	MID-STAGE BOOM WELDMENT	1
44	0807404	INNER BOOM WELDMENT	1
45	0807844	CABLE TIEBACK WELDMENT	2
46	0906535	SWIVEL-BOOM ASSEMBLY	2
47	0908028	SLIDE PAD ASSY (9055 3 STAGE)	4
48	0908118	SHEAVE ASSY 5" DIA	4
49	0908119	BOOM EXTEND SYSTEM 9055 3STAGE	1
50	0908356	SLIDE PAD ASSY (9055 3 STAGE)	2
51	3012-793001	PLATE - LUBE MTG.	1
52	9012549	CONNECTOR-MALE 3/8TUBEX1	1
53	9012552	BULKHEAD ADAPTER 1/8M-1/8F NPT	1
54	9044409	SCREW, 5/8-11X2-1/4 HHC GR8 YZ	2
55	9044434	3/8-16X1 NC FLAT SOCKET HD CAP	4
56	9048800	5/8 WELDLESS CHAIN LINK	2
57	916040004	WEAR PAD - LOWER	1
58	945030007	CABLE TIE BACK SPRING-1	2
59	945351500	PIN WELD'T LOWER LIFT CY	2
60	946030004	UPPER WEAR PAD-RECOVERY	2

0910231 BOOM ASSEMBLY 1140 3-STAGE

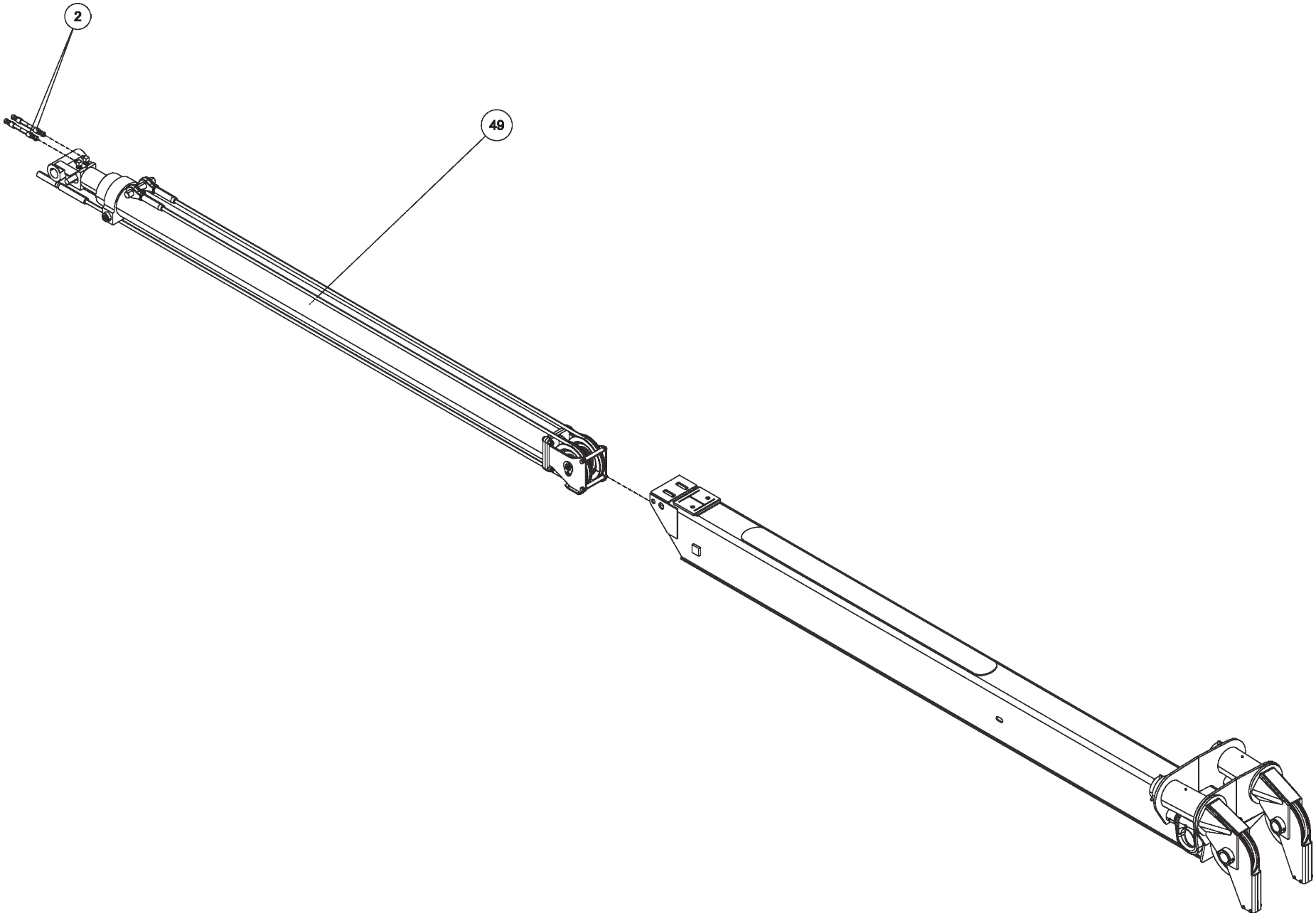

0910231 BOOM ASSEMBLY 1140 3-STAGE (cont'd)

ITEM	PART NUMBER	DESCRIPTION	QTY
	0910231	BOOM ASSEMBLY 1140 3 STAGE	
1	0300113	GREASE FITTING, 1/4-28 STR	14
2	0301529	HOSE HYD, 58	2
3	0301895	GREASE FITTING, 1/8 STR PTF	1
4	0305023	SNAP RING 5100-0225PP	2
5	0307403	CABLE - ASSY (RETRACT) 3-STAGE	2
6	0307406	PAD, SLIDE - (3) STAGE 9055	1
7	0311460	1/4" GREASE TUBING	15
8	0311575	1/4x1/4 PTC SWIVEL MALE ELBOW	1
9	0400059	SCREW, 1/4-20X5/8 HHC GR5	2
10	0400076	SCREW, 1/4-20X2-1/4 HHC GR5	2
11	0400107	SCREW, 5/16-18X2-1/2 HHC GR5	2
12	0400132	SCREW, 3/8-16X1-1/2 HHC GR5	8
13	0400133	SCREW, 3/8-16X3 HHC GR5	2
14	0400177	SCREW, 1/2-13X1-1/4 HHC GR5	4
15	0400349	SCREW, 3/8-16X3/4 FHS BO	8
16	0400367	NUT, 1/4-20 LOK	2
17	0400392	NUT, 3/8-16 LOK	10
18	0400408	NUT, 1/2-13 LOK	4
19	0400426	NUT, 5/8-11 LOK GR8	2
20	0400448	NUT, 1-1/4-12X1/2 JAM	2
21	0400452	LKWASHER, 1/4	2
22	0400461	NUT, 1-1/4-12 HEX GR8 PL	2
23	0400471	NUT, 7/8-14 HEX GR8	2
24	0400472	NUT, 7/8-14 JAM GR8	2
25	0400473	WASHER, 7/8 PL GR8	2
26	0400501	WASHER, 1-1/4 SAE PL	2
27	0400503	WASHER, 5/8 GR8	2
28	0400587	PIN, 1/4X1-1/2 SPR	2
29	0400776	NUT, 5/16-18 JAM LOK	2
30	0705104	PLATE, WINCH CABLE SPPT	1

ITEM	PART NUMBER	DESCRIPTION	QTY
31	0706042	WING, CABLE LONG 1040&1040B	2
32	0706043	WING, CABLE MED 1040&1040B	1
33	0712380	D-RING	4
34	0717744	PIN, EXTEND CYL. BASE	1
35	0717747	PIN, RETRACT CABLE	1
36	0719585	D-RING, TOWING	2
37	0722067	PIN, D-RING	2
38	0722817	PIN	1
39	0722820	PIN	1
40	0726426	PLATE-PIN KEEPER	2
41	0806752	SHAFT-RETRACT SHEAVE WELD'T	4
42	0807402	OUTER BOOM WELDMENT	1
43	0807403	MID-STAGE BOOM WELDMENT	1
44	0807404	INNER BOOM WELDMENT	1
45	0807844	CABLE TIEBACK WELDMENT	2
46	0906535	SWIVEL-BOOM ASSEMBLY	2
47	0908028	SLIDE PAD ASSY (9055 3 STAGE)	4
48	0908118	SHEAVE ASSY 5" DIA	4
49	0908119	BOOM EXTEND SYSTEM 9055 3STAGE	1
50	0908356	SLIDE PAD ASSY (9055 3 STAGE)	2
51	3012-793001	PLATE - LUBE MTG.	1
52	9012549	CONNECTOR-MALE 3/8TUBEX1	1
53	9012552	BULKHEAD ADAPTER 1/8M-1/8F NPT	1
54	9044409	SCREW, 5/8-11X2-1/4 HHC GR8 YZ	2
55	9044434	3/8-16X1 NC FLAT SOCKET HD CAP	4
56	9048800	5/8 WELDLESS CHAIN LINK	2
57	916040004	WEAR PAD - LOWER	1
58	945030007	CABLE TIE BACK SPRING-1	2
59	945351500	PIN WELD'T LOWER LIFT CY	2
60	946030004	UPPER WEAR PAD-RECOVERY	2

0910231 BOOM ASSEMBLY 1140 3-STAGE

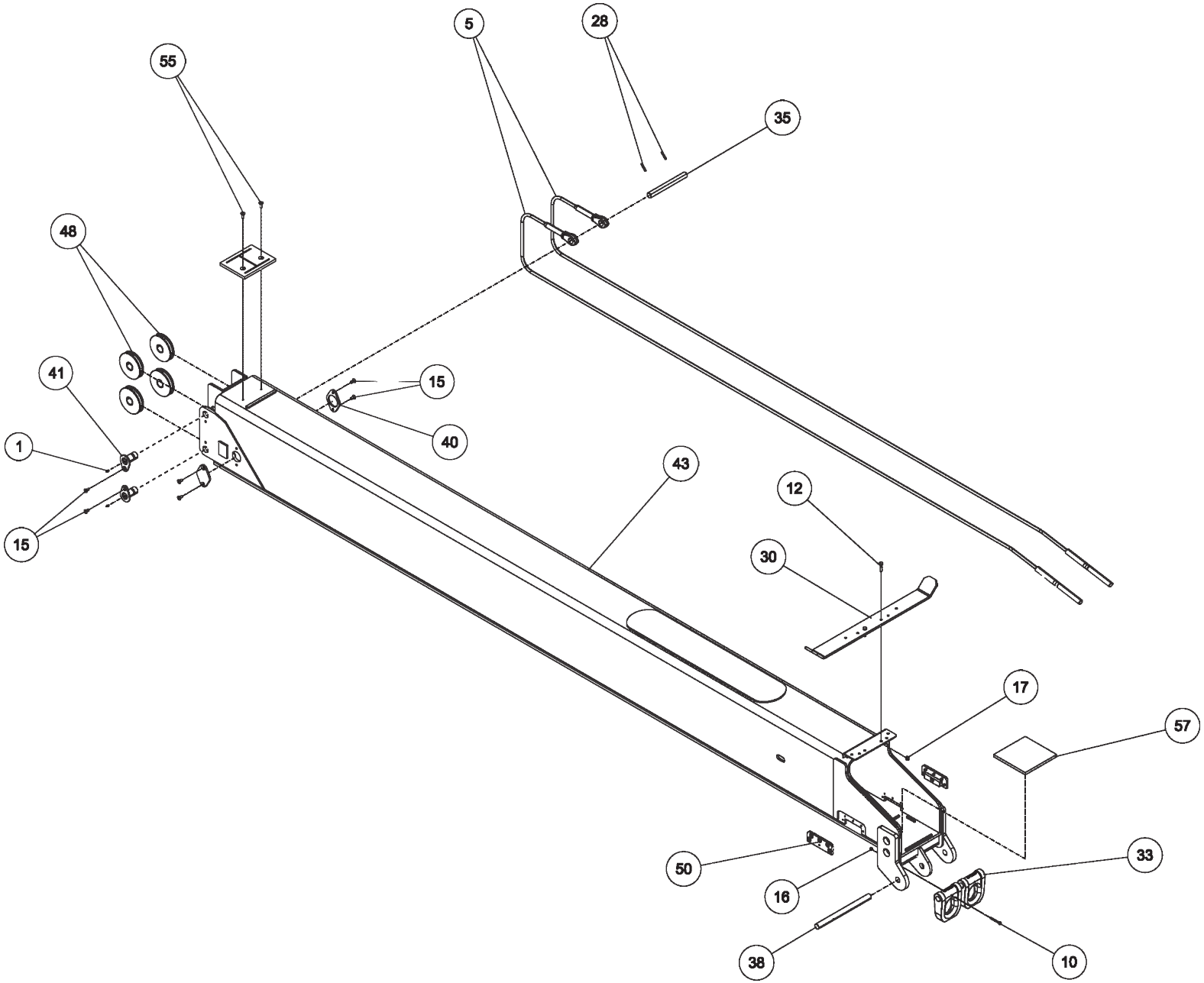

0910231 BOOM ASSEMBLY 1140 3-STAGE (cont'd)

ITEM	PART NUMBER	DESCRIPTION	QTY
	0910231	BOOM ASSEMBLY 1140 3 STAGE	
1	0300113	GREASE FITTING, 1/4-28 STR	14
2	0301529	HOSE HYD, 58	2
3	0301895	GREASE FITTING, 1/8 STR PTF	1
4	0305023	SNAP RING 5100-0225PP	2
5	0307403	CABLE - ASSY (RETRACT) 3-STAGE	2
6	0307406	PAD, SLIDE - (3) STAGE 9055	1
7	0311460	1/4" GREASE TUBING	15
8	0311575	1/4x1/4 PTC SWIVEL MALE ELBOW	1
9	0400059	SCREW, 1/4-20X5/8 HHC GR5	2
10	0400076	SCREW, 1/4-20X2-1/4 HHC GR5	2
11	0400107	SCREW, 5/16-18X2-1/2 HHC GR5	2
12	0400132	SCREW, 3/8-16X1-1/2 HHC GR5	8
13	0400133	SCREW, 3/8-16X3 HHC GR5	2
14	0400177	SCREW, 1/2-13X1-1/4 HHC GR5	4
15	0400349	SCREW, 3/8-16X3/4 FHS BO	8
16	0400367	NUT, 1/4-20 LOK	2
17	0400392	NUT, 3/8-16 LOK	10
18	0400408	NUT, 1/2-13 LOK	4
19	0400426	NUT, 5/8-11 LOK GR8	2
20	0400448	NUT, 1-1/4-12X1/2 JAM	2
21	0400452	LKWASHER, 1/4	2
22	0400461	NUT, 1-1/4-12 HEX GR8 PL	2
23	0400471	NUT, 7/8-14 HEX GR8	2
24	0400472	NUT, 7/8-14 JAM GR8	2
25	0400473	WASHER, 7/8 PL GR8	2
26	0400501	WASHER, 1-1/4 SAE PL	2
27	0400503	WASHER, 5/8 GR8	2
28	0400587	PIN, 1/4X1-1/2 SPR	2
29	0400776	NUT, 5/16-18 JAM LOK	2
30	0705104	PLATE, WINCH CABLE SPPT	1

ITEM	PART NUMBER	DESCRIPTION	QTY
31	0706042	WING, CABLE LONG 1040&1040B	2
32	0706043	WING, CABLE MED 1040&1040B	1
33	0712380	D-RING	4
34	0717744	PIN, EXTEND CYL. BASE	1
35	0717747	PIN, RETRACT CABLE	1
36	0719585	D-RING, TOWING	2
37	0722067	PIN, D-RING	2
38	0722817	PIN	1
39	0722820	PIN	1
40	0726426	PLATE-PIN KEEPER	2
41	0806752	SHAFT-RETRACT SHEAVE WELD'T	4
42	0807402	OUTER BOOM WELDMENT	1
43	0807403	MID-STAGE BOOM WELDMENT	1
44	0807404	INNER BOOM WELDMENT	1
45	0807844	CABLE TIEBACK WELDMENT	2
46	0906535	SWIVEL-BOOM ASSEMBLY	2
47	0908028	SLIDE PAD ASSY (9055 3 STAGE)	4
48	0908118	SHEAVE ASSY 5" DIA	4
49	0908119	BOOM EXTEND SYSTEM 9055 3STAGE	1
50	0908356	SLIDE PAD ASSY (9055 3 STAGE)	2
51	3012-793001	PLATE - LUBE MTG.	1
52	9012549	CONNECTOR-MALE 3/8TUBEX1	1
53	9012552	BULKHEAD ADAPTER 1/8M-1/8F NPT	1
54	9044409	SCREW, 5/8-11X2-1/4 HHC GR8 YZ	2
55	9044434	3/8-16X1 NC FLAT SOCKET HD CAP	4
56	9048800	5/8 WELDLESS CHAIN LINK	2
57	916040004	WEAR PAD - LOWER	1
58	945030007	CABLE TIE BACK SPRING-1	2
59	945351500	PIN WELD'T LOWER LIFT CY	2
60	946030004	UPPER WEAR PAD-RECOVERY	2

0910231 BOOM ASSEMBLY 1140 3-STAGE

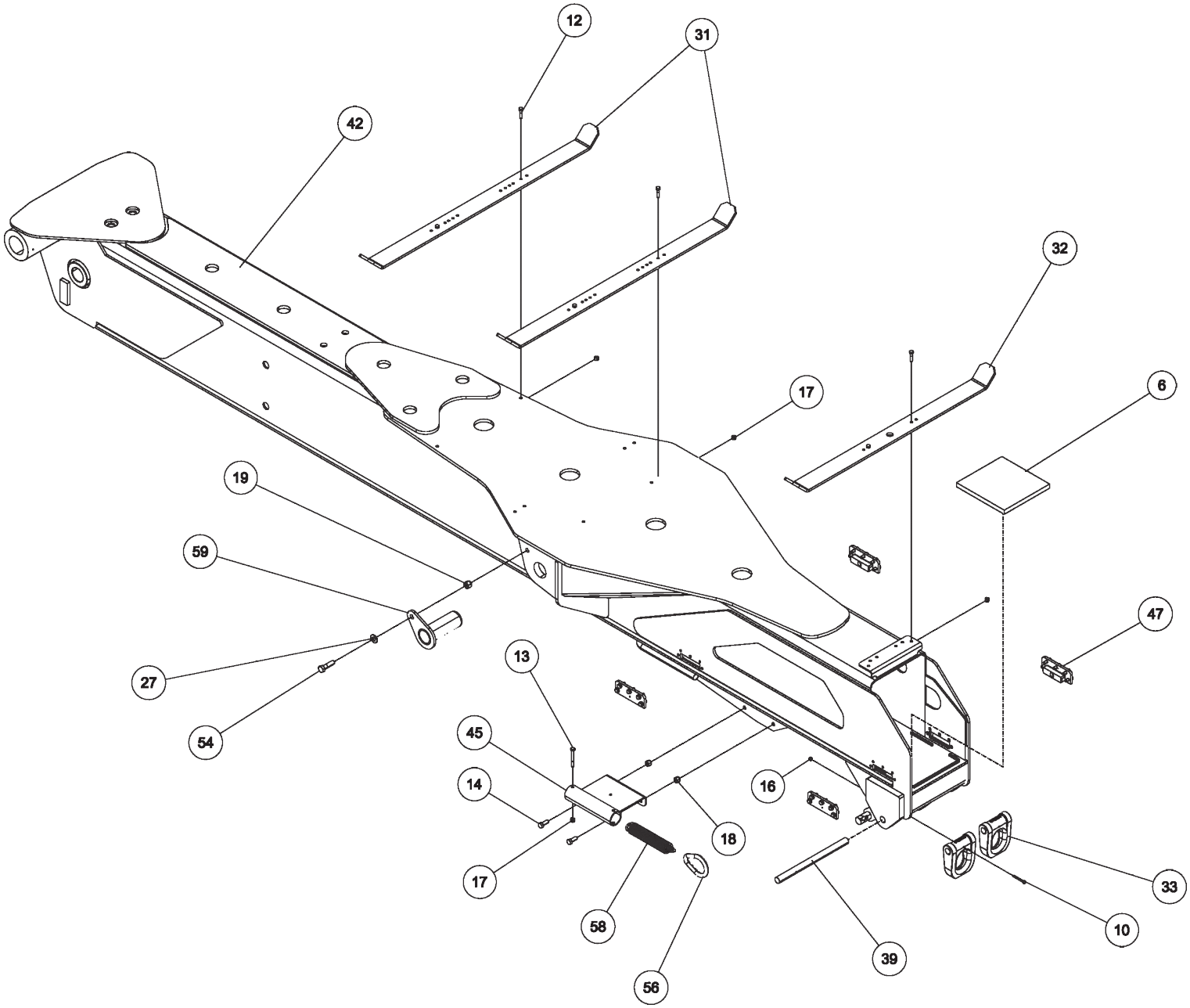

0910231 BOOM ASSEMBLY 1140 3-STAGE (cont'd)

ITEM	PART NUMBER	DESCRIPTION	QTY
	0910231	BOOM ASSEMBLY 1140 3 STAGE	
1	0300113	GREASE FITTING, 1/4-28 STR	14
2	0301529	HOSE HYD, 58	2
3	0301895	GREASE FITTING, 1/8 STR PTF	1
4	0305023	SNAP RING 5100-0225PP	2
5	0307403	CABLE - ASSY (RETRACT) 3-STAGE	2
6	0307406	PAD, SLIDE - (3) STAGE 9055	1
7	0311460	1/4" GREASE TUBING	15
8	0311575	1/4x1/4 PTC SWIVEL MALE ELBOW	1
9	0400059	SCREW, 1/4-20X5/8 HHC GR5	2
10	0400076	SCREW, 1/4-20X2-1/4 HHC GR5	2
11	0400107	SCREW, 5/16-18X2-1/2 HHC GR5	2
12	0400132	SCREW, 3/8-16X1-1/2 HHC GR5	8
13	0400133	SCREW, 3/8-16X3 HHC GR5	2
14	0400177	SCREW, 1/2-13X1-1/4 HHC GR5	4
15	0400349	SCREW, 3/8-16X3/4 FHS BO	8
16	0400367	NUT, 1/4-20 LOK	2
17	0400392	NUT, 3/8-16 LOK	10
18	0400408	NUT, 1/2-13 LOK	4
19	0400426	NUT, 5/8-11 LOK GR8	2
20	0400448	NUT, 1-1/4-12X1/2 JAM	2
21	0400452	LKWASHER, 1/4	2
22	0400461	NUT, 1-1/4-12 HEX GR8 PL	2
23	0400471	NUT, 7/8-14 HEX GR8	2
24	0400472	NUT, 7/8-14 JAM GR8	2
25	0400473	WASHER, 7/8 PL GR8	2
26	0400501	WASHER, 1-1/4 SAE PL	2
27	0400503	WASHER, 5/8 GR8	2
28	0400587	PIN, 1/4X1-1/2 SPR	2
29	0400776	NUT, 5/16-18 JAM LOK	2
30	0705104	PLATE, WINCH CABLE SPPT	1

ITEM	PART NUMBER	DESCRIPTION	QTY
31	0706042	WING, CABLE LONG 1040&1040B	2
32	0706043	WING, CABLE MED 1040&1040B	1
33	0712380	D-RING	4
34	0717744	PIN, EXTEND CYL. BASE	1
35	0717747	PIN, RETRACT CABLE	1
36	0719585	D-RING, TOWING	2
37	0722067	PIN, D-RING	2
38	0722817	PIN	1
39	0722820	PIN	1
40	0726426	PLATE-PIN KEEPER	2
41	0806752	SHAFT-RETRACT SHEAVE WELD'T	4
42	0807402	OUTER BOOM WELDMENT	1
43	0807403	MID-STAGE BOOM WELDMENT	1
44	0807404	INNER BOOM WELDMENT	1
45	0807844	CABLE TIEBACK WELDMENT	2
46	0906535	SWIVEL-BOOM ASSEMBLY	2
47	0908028	SLIDE PAD ASSY (9055 3 STAGE)	4
48	0908118	SHEAVE ASSY 5" DIA	4
49	0908119	BOOM EXTEND SYSTEM 9055 3STAGE	1
50	0908356	SLIDE PAD ASSY (9055 3 STAGE)	2
51	3012-793001	PLATE - LUBE MTG.	1
52	9012549	CONNECTOR-MALE 3/8TUBEX1	1
53	9012552	BULKHEAD ADAPTER 1/8M-1/8F NPT	1
54	9044409	SCREW, 5/8-11X2-1/4 HHC GR8 YZ	2
55	9044434	3/8-16X1 NC FLAT SOCKET HD CAP	4
56	9048800	5/8 WELDLESS CHAIN LINK	2
57	916040004	WEAR PAD - LOWER	1
58	945030007	CABLE TIE BACK SPRING-1	2
59	945351500	PIN WELD'T LOWER LIFT CY	2
60	946030004	UPPER WEAR PAD-RECOVERY	2

0910231 BOOM ASSEMBLY 1140 3-STAGE

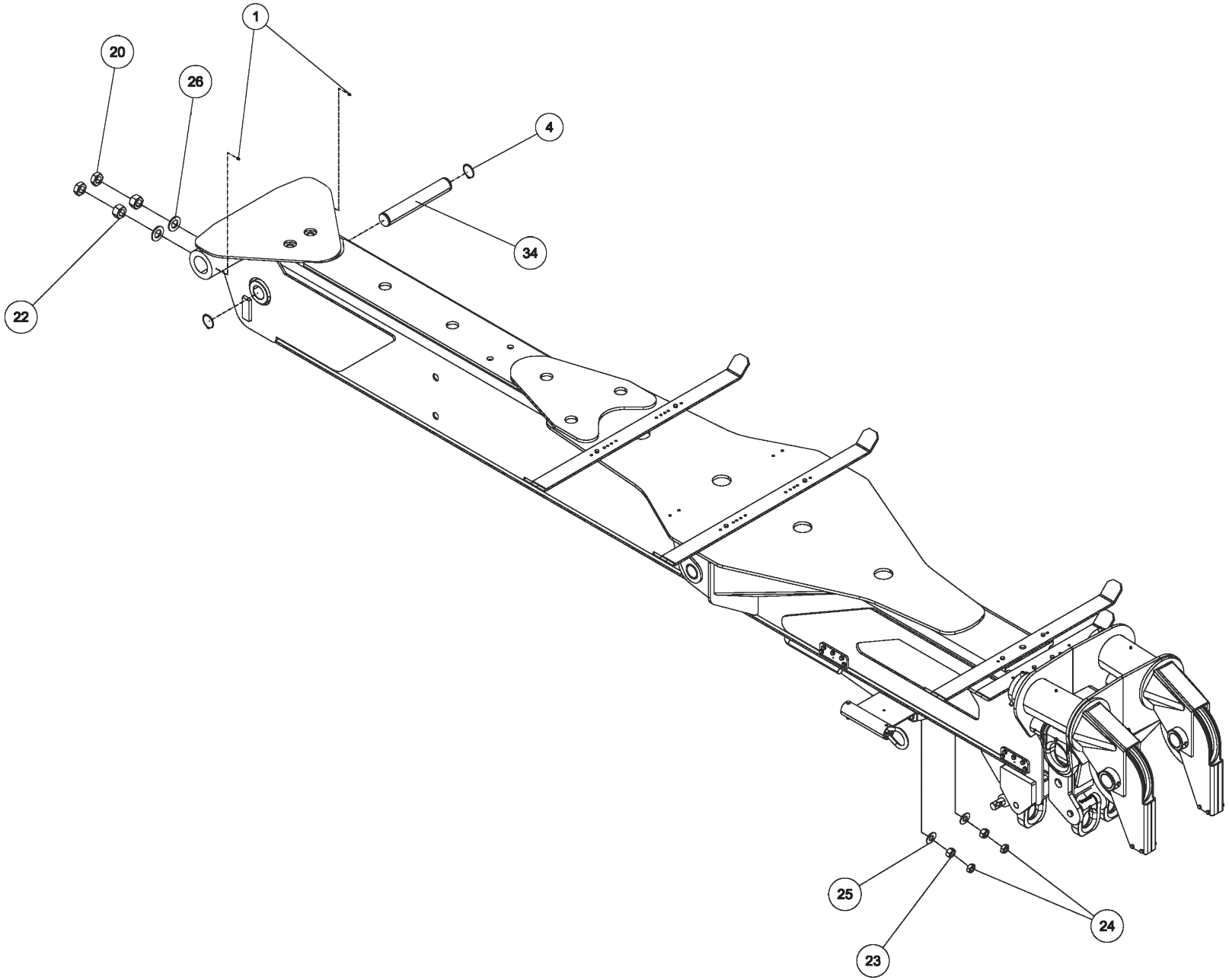

0910231 BOOM ASSEMBLY 1140 3-STAGE (cont'd)

ITEM	PART NUMBER	DESCRIPTION	QTY
	0910231	BOOM ASSEMBLY 1140 3 STAGE	
1	0300113	GREASE FITTING, 1/4-28 STR	14
2	0301529	HOSE HYD, 58	2
3	0301895	GREASE FITTING, 1/8 STR PTF	1
4	0305023	SNAP RING 5100-0225PP	2
5	0307403	CABLE - ASSY (RETRACT) 3-STAGE	2
6	0307406	PAD, SLIDE - (3) STAGE 9055	1
7	0311460	1/4" GREASE TUBING	15
8	0311575	1/4x1/4 PTC SWIVEL MALE ELBOW	1
9	0400059	SCREW, 1/4-20X5/8 HHC GR5	2
10	0400076	SCREW, 1/4-20X2-1/4 HHC GR5	2
11	0400107	SCREW, 5/16-18X2-1/2 HHC GR5	2
12	0400132	SCREW, 3/8-16X1-1/2 HHC GR5	8
13	0400133	SCREW, 3/8-16X3 HHC GR5	2
14	0400177	SCREW, 1/2-13X1-1/4 HHC GR5	4
15	0400349	SCREW, 3/8-16X3/4 FHS BO	8
16	0400367	NUT, 1/4-20 LOK	2
17	0400392	NUT, 3/8-16 LOK	10
18	0400408	NUT, 1/2-13 LOK	4
19	0400426	NUT, 5/8-11 LOK GR8	2
20	0400448	NUT, 1-1/4-12X1/2 JAM	2
21	0400452	LKWASHER, 1/4	2
22	0400461	NUT, 1-1/4-12 HEX GR8 PL	2
23	0400471	NUT, 7/8-14 HEX GR8	2
24	0400472	NUT, 7/8-14 JAM GR8	2
25	0400473	WASHER, 7/8 PL GR8	2
26	0400501	WASHER, 1-1/4 SAE PL	2
27	0400503	WASHER, 5/8 GR8	2
28	0400587	PIN, 1/4X1-1/2 SPR	2
29	0400776	NUT, 5/16-18 JAM LOK	2
30	0705104	PLATE, WINCH CABLE SPPT	1

ITEM	PART NUMBER	DESCRIPTION	QTY
31	0706042	WING, CABLE LONG 1040&1040B	2
32	0706043	WING, CABLE MED 1040&1040B	1
33	0712380	D-RING	4
34	0717744	PIN, EXTEND CYL. BASE	1
35	0717747	PIN, RETRACT CABLE	1
36	0719585	D-RING, TOWING	2
37	0722067	PIN, D-RING	2
38	0722817	PIN	1
39	0722820	PIN	1
40	0726426	PLATE-PIN KEEPER	2
41	0806752	SHAFT-RETRACT SHEAVE WELD'T	4
42	0807402	OUTER BOOM WELDMENT	1
43	0807403	MID-STAGE BOOM WELDMENT	1
44	0807404	INNER BOOM WELDMENT	1
45	0807844	CABLE TIEBACK WELDMENT	2
46	0906535	SWIVEL-BOOM ASSEMBLY	2
47	0908028	SLIDE PAD ASSY (9055 3 STAGE)	4
48	0908118	SHEAVE ASSY 5" DIA	4
49	0908119	BOOM EXTEND SYSTEM 9055 3STAGE	1
50	0908356	SLIDE PAD ASSY (9055 3 STAGE)	2
51	3012-793001	PLATE - LUBE MTG.	1
52	9012549	CONNECTOR-MALE 3/8TUBEX1	1
53	9012552	BULKHEAD ADAPTER 1/8M-1/8F NPT	1
54	9044409	SCREW, 5/8-11X2-1/4 HHC GR8 YZ	2
55	9044434	3/8-16X1 NC FLAT SOCKET HD CAP	4
56	9048800	5/8 WELDLESS CHAIN LINK	2
57	916040004	WEAR PAD - LOWER	1
58	945030007	CABLE TIE BACK SPRING-1	2
59	945351500	PIN WELD'T LOWER LIFT CY	2
60	946030004	UPPER WEAR PAD-RECOVERY	2

0906535 SWIVEL - BOOM ASSEMBLY

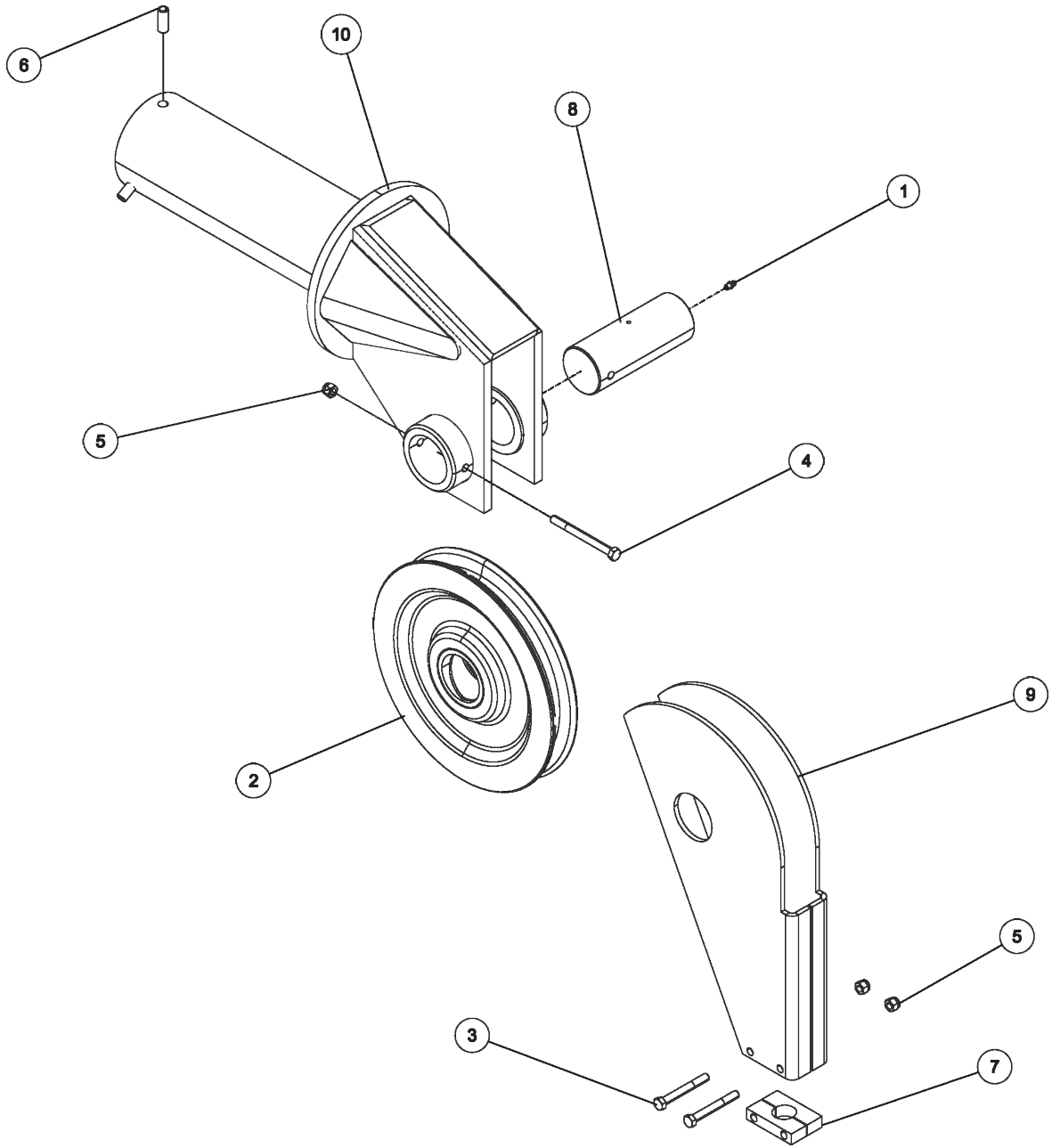

0906535 SWIVEL - BOOM ASSEMBLY (cont'd)

ITEM	PART NUMBER	DESCRIPTION	QTY
	0906535	BOOM SWIVEL ASSEMBLY	
1	0300113	GREASE FITTING, 1/4-28 STR	1
2	0300311	SHEAVE, 12-10-1BB 10	1
3	0400133	SCREW, 3/8-16X3 HHC GR5	2
4	0400140	SCREW, 3/8-16X4 HHC GR5	1
5	0400392	NUT, 3/8-16 LOK	3
6	0400557	PIN, 1/2X1-1/4 SPR	3
7	0700511	GUIDE, BOTTOM CABLE	2
8	0700563	SHAFT, SHEAVE	1
9	0802027	GUIDE-CABLE WELDMENT	1
10	0804450	BOOM END SWIVEL WLDT-FIXED9055	1

0908119 BOOM EXTEND SYSTEM

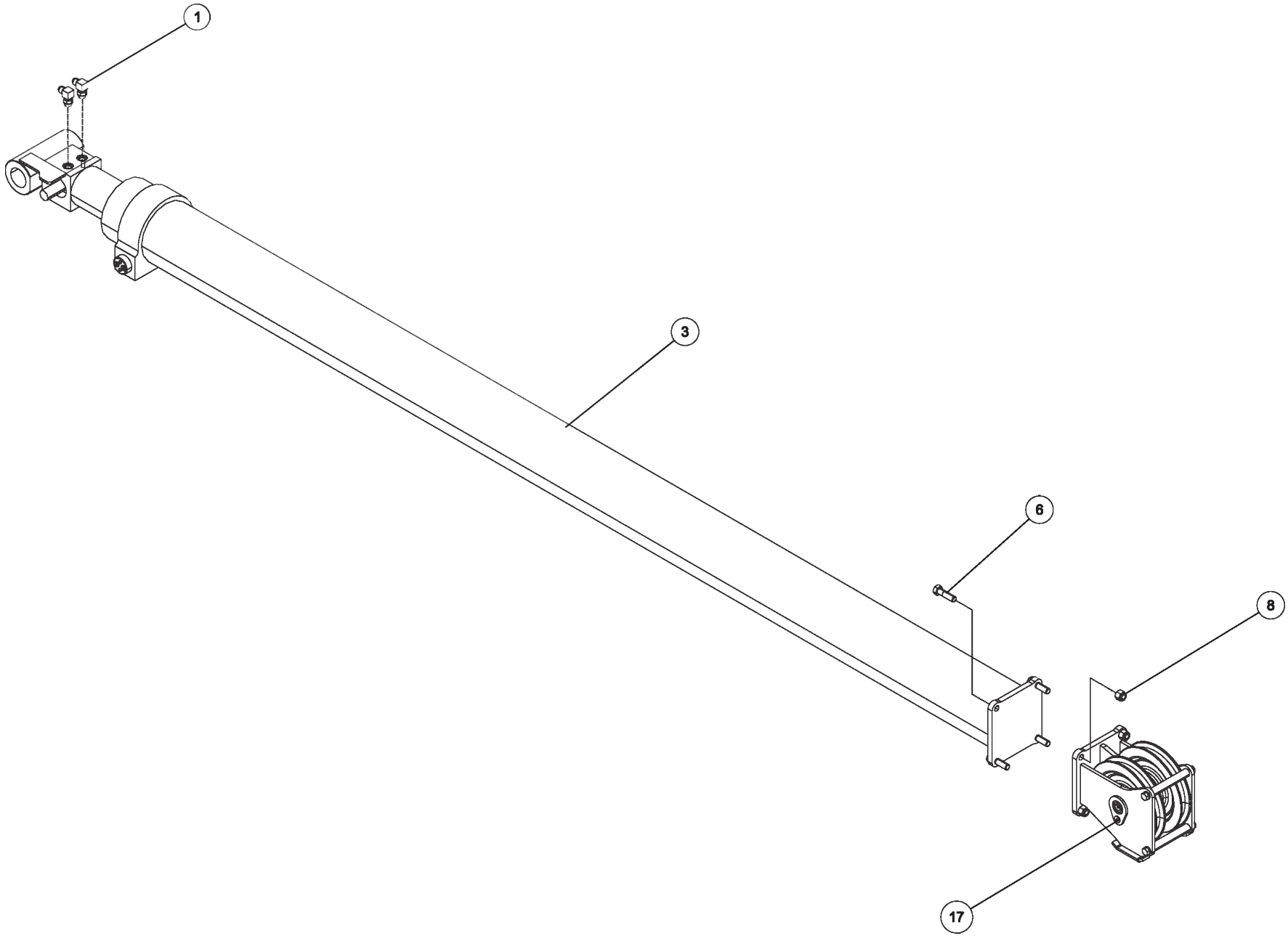

0908119 BOOM EXTEND SYSTEM (cont'd)

ITEM	PART NUMBER	DESCRIPTION	QTY
	0908119	BOOM EXTEND SYSTEM	
1	0301388	ELBOW, 8MJ-8MB90	2
2	0307160	CABLE - EXT ASSY 3-STAGE BOOM	2
3	0307402	CYL HYD 6.5 BORE 3-STAGE 9055&	1
4	0307403	CABLE - ASSY (RETRACT) 3-STAGE	2
5	0400146	SCREW, 3/8-16X2-1/4 HHC GR5	1
6	0400264	SCREW, 5/8-11X2-1/4 HHC GR5	4
7	0400398	NUT, 3/8-16 LOK JAM	1
8	0400421	NUT, 5/8-11 LOK	4
9	0400448	NUT, 1-1/4-12X1/2 JAM	2
10	0400461	NUT, 1-1/4-12 HEX GR8 PL	2
11	0400471	NUT, 7/8-14 HEX GR8	2
12	0400472	NUT, 7/8-14 JAM GR8	4
13	0400473	WASHER, 7/8 PL GR8	4
14	0400501	WASHER, 1-1/4 SAE PL	2
15	0400587	PIN, 1/4X1-1/2 SPR	2
16	0717747	PIN, RETRACT CABLE	1
17	0908022	EXTEND SHEAVE ASSY 9055 3STAGE	1
18	GA0215	PIN-"D" RING	1

0908119 BOOM EXTEND SYSTEM

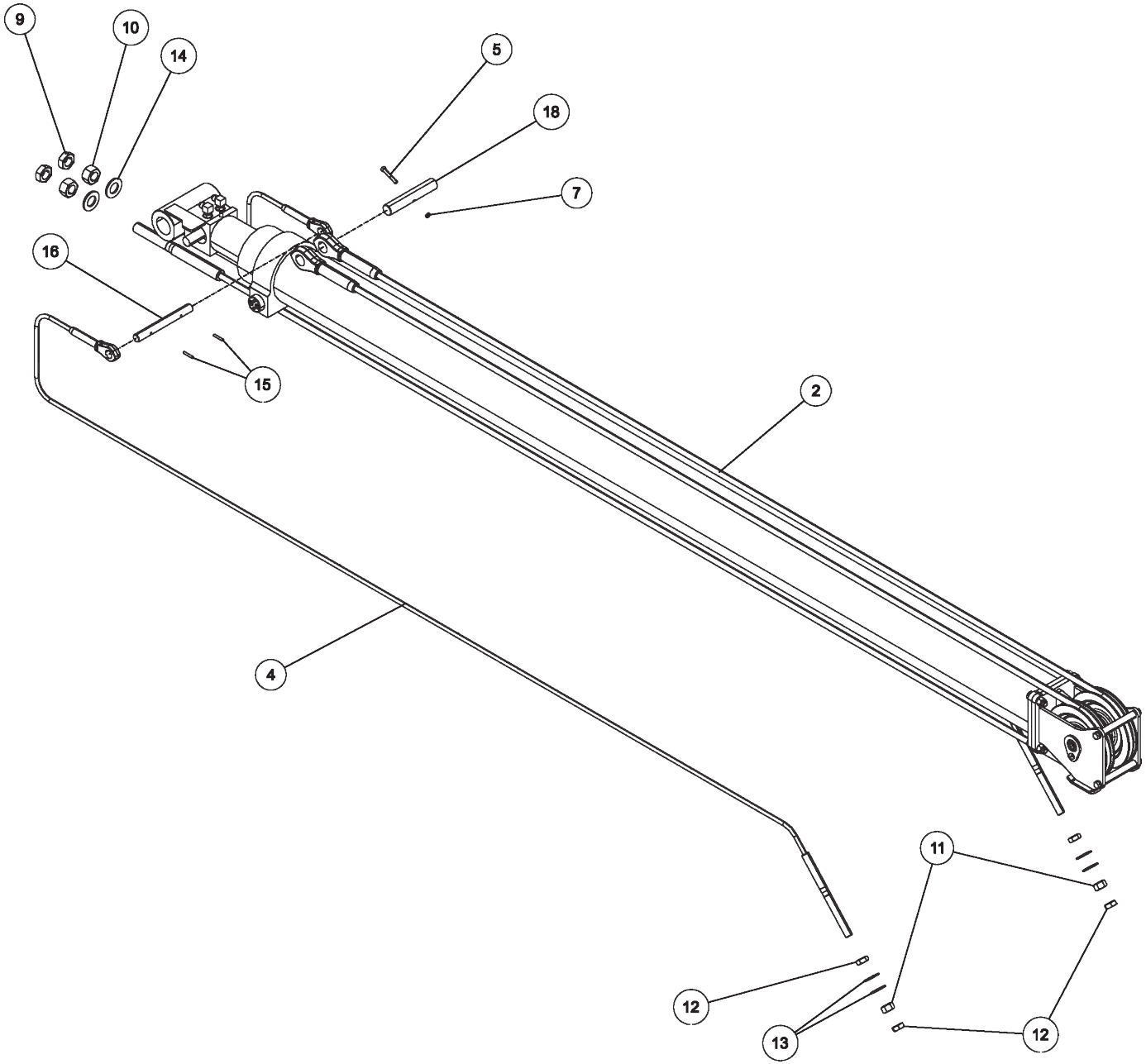

0908119 BOOM EXTEND SYSTEM (cont'd)

ITEM	PART NUMBER	DESCRIPTION	QTY
	0908119	BOOM EXTEND SYSTEM	
1	0301388	ELBOW, 8MJ-8MB90	2
2	0307160	CABLE - EXT ASSY 3-STAGE BOOM	2
3	0307402	CYL HYD 6.5 BORE 3-STAGE 9055&	1
4	0307403	CABLE - ASSY (RETRACT) 3-STAGE	2
5	0400146	SCREW, 3/8-16X2-1/4 HHC GR5	1
6	0400264	SCREW, 5/8-11X2-1/4 HHC GR5	4
7	0400398	NUT, 3/8-16 LOK JAM	1
8	0400421	NUT, 5/8-11 LOK	4
9	0400448	NUT, 1-1/4-12X1/2 JAM	2
10	0400461	NUT, 1-1/4-12 HEX GR8 PL	2
11	0400471	NUT, 7/8-14 HEX GR8	2
12	0400472	NUT, 7/8-14 JAM GR8	4
13	0400473	WASHER, 7/8 PL GR8	4
14	0400501	WASHER, 1-1/4 SAE PL	2
15	0400587	PIN, 1/4X1-1/2 SPR	2
16	0717747	PIN, RETRACT CABLE	1
17	0908022	EXTEND SHEAVE ASSY 9055 3STAGE	1
18	GA0215	PIN-"D" RING	1

0908356 SLIDE PAD ASSEMBLY

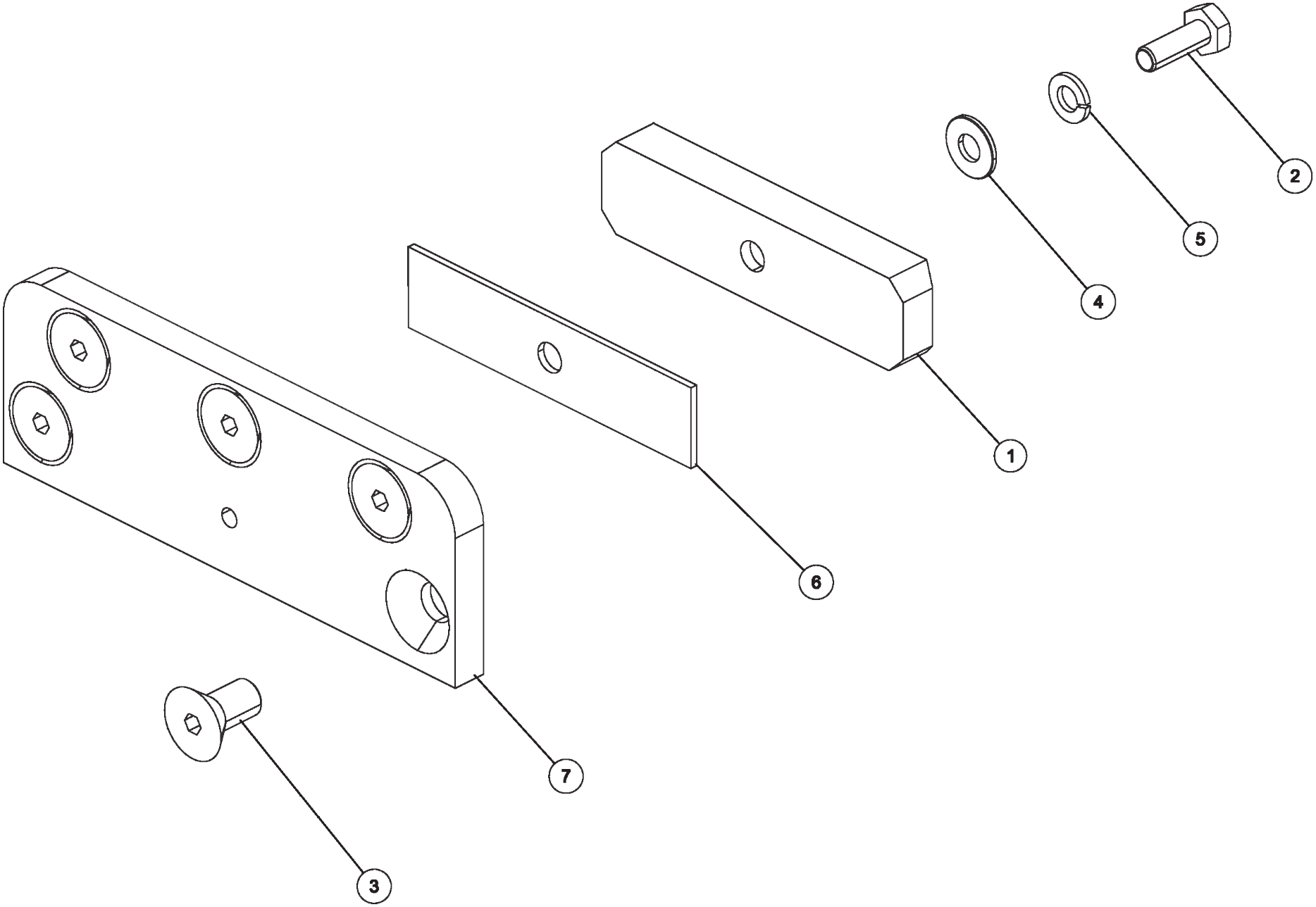

0908356 SLIDE PAD ASSEMBLY (cont'd)

ITEM	PART NUMBER	DESCRIPTION	QTY
	0908356	SLIDE PAD ASSEMBLY 3 STAGE	
1	0303490	PAD-WEAR 1/2" X 1" X 4"	1
2	0400066	SCREW, 1/4-20X3/4 HHC GR5	1
3	0400349	SCREW, 3/8-16X3/4 FHS BO	5
4	0400451	WASHER, 1/4	1
5	0400452	LKWASHER, 1/4	1
6	0717262	SHIM - SLIDE PAD	1
7	0718134	PLATE - SLIDE PAD SUPPORT	1

0910232 WRECKER FRAME ASSEMBLY 1140

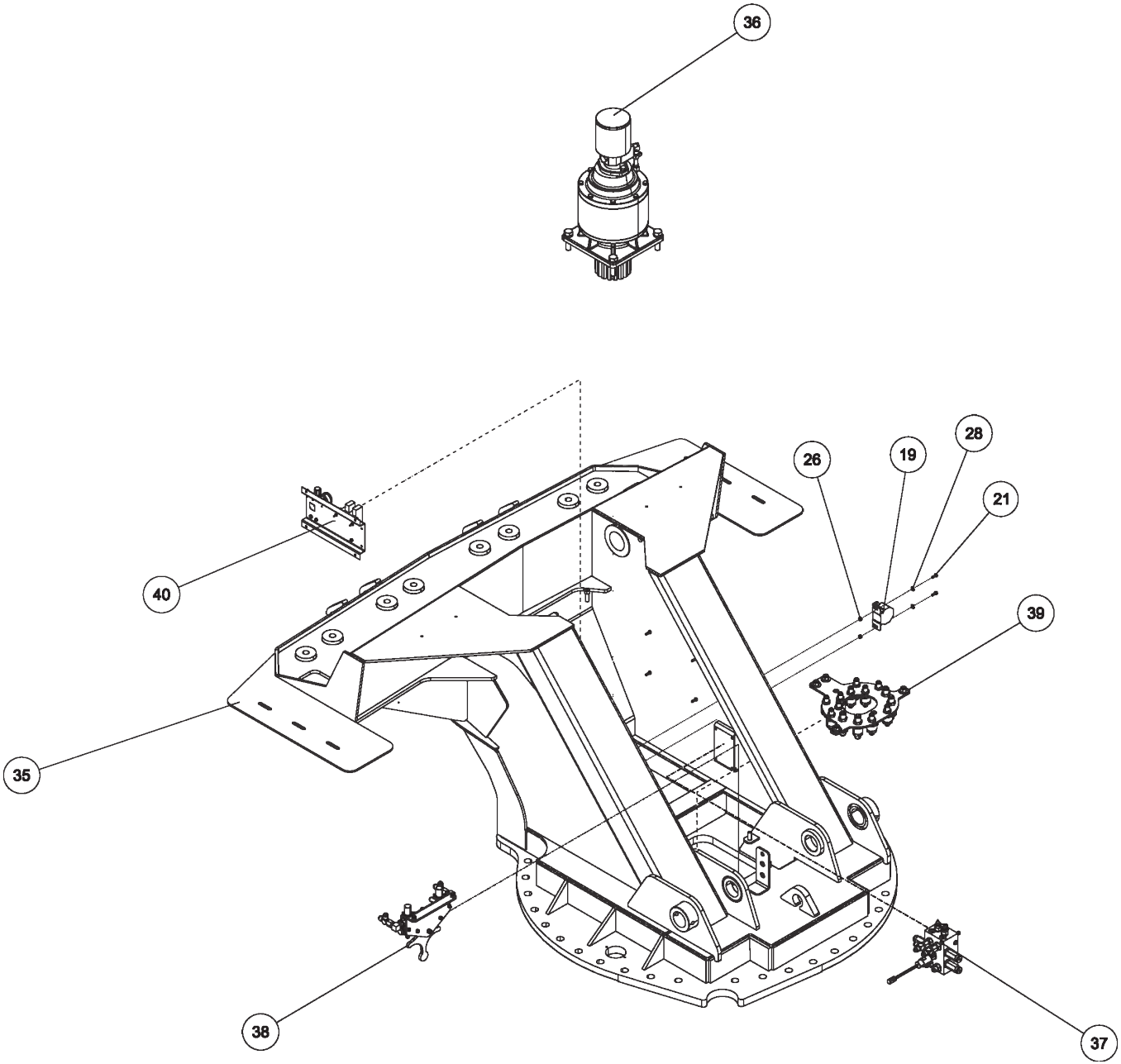

0910232 WRECKER FRAME ASSEMBLY 1140 (cont'd)

ITEM	PART NUMBER	DESCRIPTION	QTY
	0910232	WRECKER FRAME ASSEMBLY 1140	
1	0300041	CONNECTOR, 8MJ-8MB	2
2	0300113	GREASE FITTING, 1/4-28 STR	4
3	0300644	HOSE CLAMP,8 68452/I	2
4	0300659	HOSE HYD, 45"	2
5	0300787	HOSE HYD, 53" LG	4
6	0301376	CONNECTOR 8 MJ - 10 MB	2
7	0301388	ELBOW, 8MJ-8MB90	4
8	0301471	HOSE, 30" 8FJK-8M3K-8FJX90	3
9	0302275	FITTING, CONN 8MJ-6MB W/STEP	2
10	0302276	FITTING, ELB 90 DEG	4
11	0302313	HOSE HYD, 25"	7
12	0302568	HYD TUBING	2
13	0302574	FITTING-BULKHEAD RUN TEE	2
14	0302792	CYL HYD HEAVY/CHROME	2
15	0302796	FITTING, TEE	2
16	0303994	HOSE ASSY- 22"	1
17	0307107	VALVE, HOLDING 4000 PSI SAE	2
18	0307613	TUBING-HYD ASSY 1/2" DIA 9055	2
19	0310381	ALARM, SWING (ECCO DT500)	1
20	0311310	VALVE-ROTATE FLOW LIMITER	1
21	0400066	SCREW, 1/4-20X3/4 HHC GR5	6
22	0400078	SCREW, 1/4-20X2 HHC GR5	6
23	0400180	SCREW, 1/2-13X6 HHC GR5	1
24	0400206	SCREW, 1/2-13X5 HHC GR5	2
25	0400336	SCREW, 1-8X3 HHC GR8	38
26	0400367	NUT, 1/4-20 LOK	8
27	0400408	NUT, 1/2-13 LOK	3
28	0400451	WASHER, 1/4	10
29	0400452	LKWASHER, 1/4	4
30	0400522	WASHER, 1-1/16X2X1/8 TH YZ	38
31	0703001	BRKT, MTG CHECK VALVE	2
32	0708094	PIN, LIFT CYL	2
33	0719162	PLATE, ACCESS COVER	2
34	0722103	SHAFT - BOOM PIVOT	1
35	0807401	WRECKER FRAME WELDMENT	1
36	0910235	SWING DRIVE ASSEMBLY - 1140	1
37	0910236	SWING CONTROL VALVE ASSY -1140	1
38	0910238	SWING LIMIT VALVE ASSY - 1140	1
39	0911199	HYDRAULC SWIVEL PLATE ASY 1140	1
40	0911335	12V AIR SYSTEM KIT 1130/1140	1

0910232 WRECKER FRAME ASSEMBLY 1140

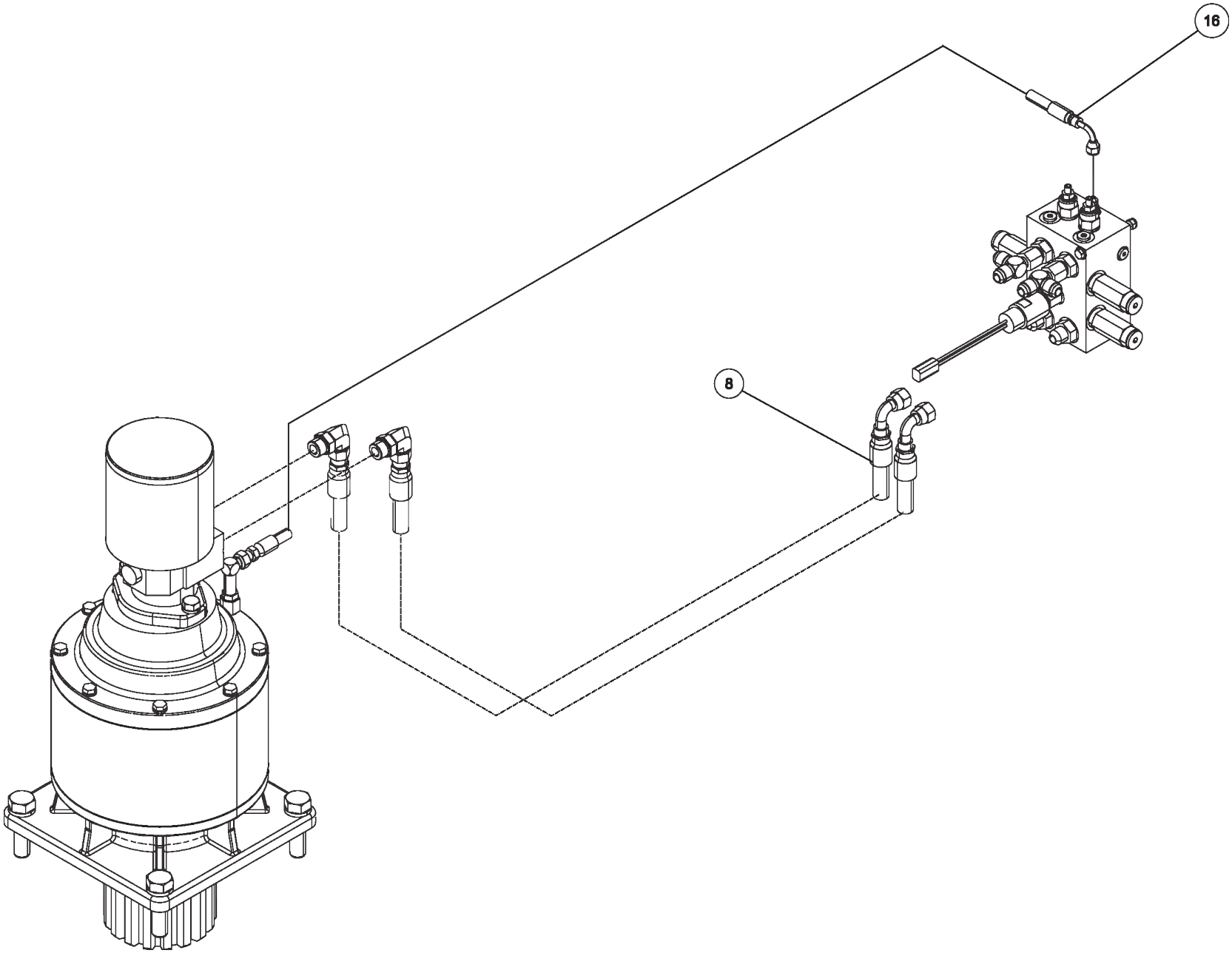

0910232 WRECKER FRAME ASSEMBLY 1140 (cont'd)

ITEM	PART NUMBER	DESCRIPTION	QTY
	0910232	WRECKER FRAME ASSEMBLY 1140	
1	0300041	CONNECTOR, 8MJ-8MB	2
2	0300113	GREASE FITTING, 1/4-28 STR	4
3	0300644	HOSE CLAMP,8 68452/I	2
4	0300659	HOSE HYD, 45"	2
5	0300787	HOSE HYD, 53" LG	4
6	0301376	CONNECTOR 8 MJ - 10 MB	2
7	0301388	ELBOW, 8MJ-8MB90	4
8	0301471	HOSE, 30" 8FJK-8M3K-8FJX90	3
9	0302275	FITTING, CONN 8MJ-6MB W/STEP	2
10	0302276	FITTING, ELB 90 DEG	4
11	0302313	HOSE HYD, 25"	7
12	0302568	HYD TUBING	2
13	0302574	FITTING-BULKHEAD RUN TEE	2
14	0302792	CYL HYD HEAVY/CHROME	2
15	0302796	FITTING, TEE	2
16	0303994	HOSE ASSY- 22"	1
17	0307107	VALVE, HOLDING 4000 PSI SAE	2
18	0307613	TUBING-HYD ASSY 1/2" DIA 9055	2
19	0310381	ALARM, SWING (ECCO DT500)	1
20	0311310	VALVE-ROTATE FLOW LIMITER	1
21	0400066	SCREW, 1/4-20X3/4 HHC GR5	6
22	0400078	SCREW, 1/4-20X2 HHC GR5	6
23	0400180	SCREW, 1/2-13X6 HHC GR5	1
24	0400206	SCREW, 1/2-13X5 HHC GR5	2
25	0400336	SCREW, 1-8X3 HHC GR8	38
26	0400367	NUT, 1/4-20 LOK	8
27	0400408	NUT, 1/2-13 LOK	3
28	0400451	WASHER, 1/4	10
29	0400452	LKWASHER, 1/4	4
30	0400522	WASHER, 1-1/16X2X1/8 TH YZ	38
31	0703001	BRKT, MTG CHECK VALVE	2
32	0708094	PIN, LIFT CYL	2
33	0719162	PLATE, ACCESS COVER	2
34	0722103	SHAFT - BOOM PIVOT	1
35	0807401	WRECKER FRAME WELDMENT	1
36	0910235	SWING DRIVE ASSEMBLY - 1140	1
37	0910236	SWING CONTROL VALVE ASSY -1140	1
38	0910238	SWING LIMIT VALVE ASSY - 1140	1
39	0911199	HYDRAULC SWIVEL PLATE ASY 1140	1
40	0911335	12V AIR SYSTEM KIT 1130/1140	1

0910232 WRECKER FRAME ASSEMBLY 1140

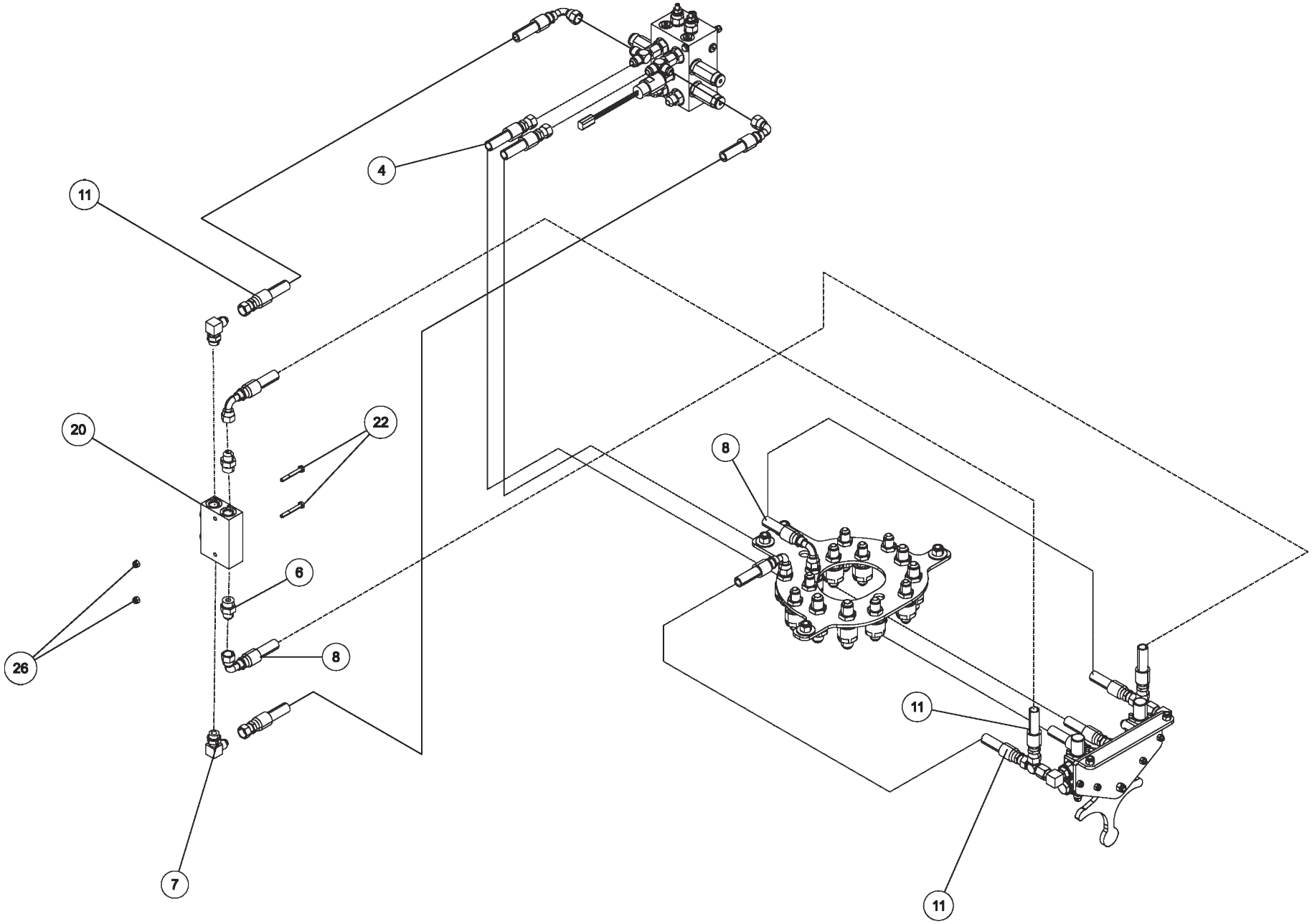

0910232 WRECKER FRAME ASSEMBLY 1140 (cont'd)

ITEM	PART NUMBER	DESCRIPTION	QTY
	0910232	WRECKER FRAME ASSEMBLY 1140	
1	0300041	CONNECTOR, 8MJ-8MB	2
2	0300113	GREASE FITTING, 1/4-28 STR	4
3	0300644	HOSE CLAMP,8 68452/I	2
4	0300659	HOSE HYD, 45"	2
5	0300787	HOSE HYD, 53" LG	4
6	0301376	CONNECTOR 8 MJ - 10 MB	2
7	0301388	ELBOW, 8MJ-8MB90	4
8	0301471	HOSE, 30" 8FJK-8M3K-8FJX90	3
9	0302275	FITTING, CONN 8MJ-6MB W/STEP	2
10	0302276	FITTING, ELB 90 DEG	4
11	0302313	HOSE HYD, 25"	7
12	0302568	HYD TUBING	2
13	0302574	FITTING-BULKHEAD RUN TEE	2
14	0302792	CYL HYD HEAVY/CHROME	2
15	0302796	FITTING, TEE	2
16	0303994	HOSE ASSY- 22"	1
17	0307107	VALVE, HOLDING 4000 PSI SAE	2
18	0307613	TUBING-HYD ASSY 1/2" DIA 9055	2
19	0310381	ALARM, SWING (ECCO DT500)	1
20	0311310	VALVE-ROTATE FLOW LIMITER	1
21	0400066	SCREW, 1/4-20X3/4 HHC GR5	6
22	0400078	SCREW, 1/4-20X2 HHC GR5	6
23	0400180	SCREW, 1/2-13X6 HHC GR5	1
24	0400206	SCREW, 1/2-13X5 HHC GR5	2
25	0400336	SCREW, 1-8X3 HHC GR8	38
26	0400367	NUT, 1/4-20 LOK	8
27	0400408	NUT, 1/2-13 LOK	3
28	0400451	WASHER, 1/4	10
29	0400452	LKWASHER, 1/4	4
30	0400522	WASHER, 1-1/16X2X1/8 TH YZ	38
31	0703001	BRKT, MTG CHECK VALVE	2
32	0708094	PIN, LIFT CYL	2
33	0719162	PLATE, ACCESS COVER	2
34	0722103	SHAFT - BOOM PIVOT	1
35	0807401	WRECKER FRAME WELDMENT	1
36	0910235	SWING DRIVE ASSEMBLY - 1140	1
37	0910236	SWING CONTROL VALVE ASSY -1140	1
38	0910238	SWING LIMIT VALVE ASSY - 1140	1
39	0911199	HYDRAULC SWIVEL PLATE ASY 1140	1
40	0911335	12V AIR SYSTEM KIT 1130/1140	1

0910232 WRECKER FRAME ASSEMBLY 1140

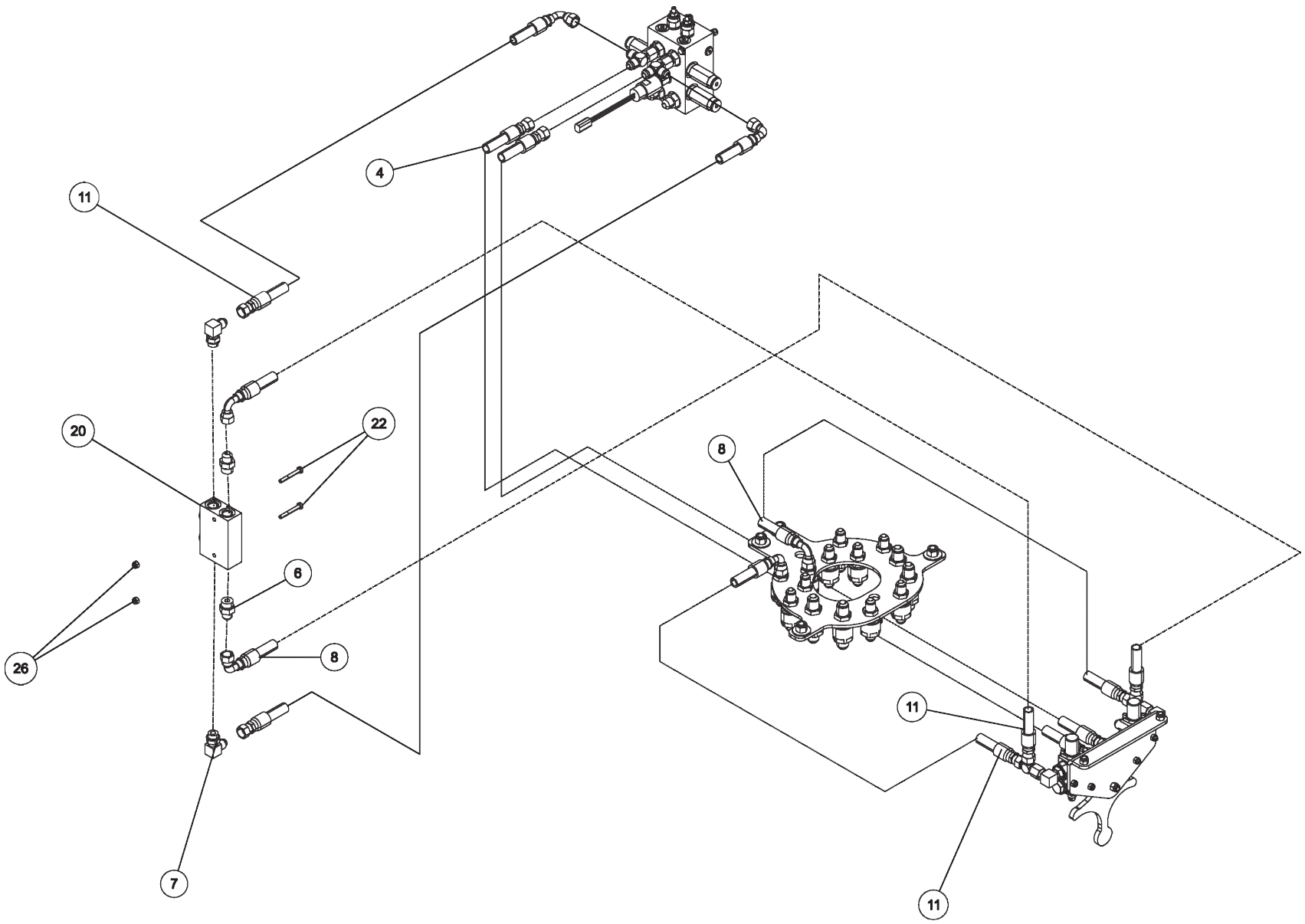

0910232 WRECKER FRAME ASSEMBLY 1140 (cont'd)

ITEM	PART NUMBER	DESCRIPTION	QTY
	0910232	WRECKER FRAME ASSEMBLY 1140	
1	0300041	CONNECTOR, 8MJ-8MB	2
2	0300113	GREASE FITTING, 1/4-28 STR	4
3	0300644	HOSE CLAMP,8 68452/I	2
4	0300659	HOSE HYD, 45"	2
5	0300787	HOSE HYD, 53" LG	4
6	0301376	CONNECTOR 8 MJ - 10 MB	2
7	0301388	ELBOW, 8MJ-8MB90	4
8	0301471	HOSE, 30" 8FJK-8M3K-8FJX90	3
9	0302275	FITTING, CONN 8MJ-6MB W/STEP	2
10	0302276	FITTING, ELB 90 DEG	4
11	0302313	HOSE HYD, 25"	7
12	0302568	HYD TUBING	2
13	0302574	FITTING-BULKHEAD RUN TEE	2
14	0302792	CYL HYD HEAVY/CHROME	2
15	0302796	FITTING, TEE	2
16	0303994	HOSE ASSY- 22"	1
17	0307107	VALVE, HOLDING 4000 PSI SAE	2
18	0307613	TUBING-HYD ASSY 1/2" DIA 9055	2
19	0310381	ALARM, SWING (ECCO DT500)	1
20	0311310	VALVE-ROTATE FLOW LIMITER	1
21	0400066	SCREW, 1/4-20X3/4 HHC GR5	6
22	0400078	SCREW, 1/4-20X2 HHC GR5	6
23	0400180	SCREW, 1/2-13X6 HHC GR5	1
24	0400206	SCREW, 1/2-13X5 HHC GR5	2
25	0400336	SCREW, 1-8X3 HHC GR8	38
26	0400367	NUT, 1/4-20 LOK	8
27	0400408	NUT, 1/2-13 LOK	3
28	0400451	WASHER, 1/4	10
29	0400452	LKWASHER, 1/4	4
30	0400522	WASHER, 1-1/16X2X1/8 TH YZ	38
31	0703001	BRKT, MTG CHECK VALVE	2
32	0708094	PIN, LIFT CYL	2
33	0719162	PLATE, ACCESS COVER	2
34	0722103	SHAFT - BOOM PIVOT	1
35	0807401	WRECKER FRAME WELDMENT	1
36	0910235	SWING DRIVE ASSEMBLY - 1140	1
37	0910236	SWING CONTROL VALVE ASSY -1140	1
38	0910238	SWING LIMIT VALVE ASSY - 1140	1
39	0911199	HYDRAULC SWIVEL PLATE ASY 1140	1
40	0911335	12V AIR SYSTEM KIT 1130/1140	1

0910232 WRECKER FRAME ASSEMBLY 1140

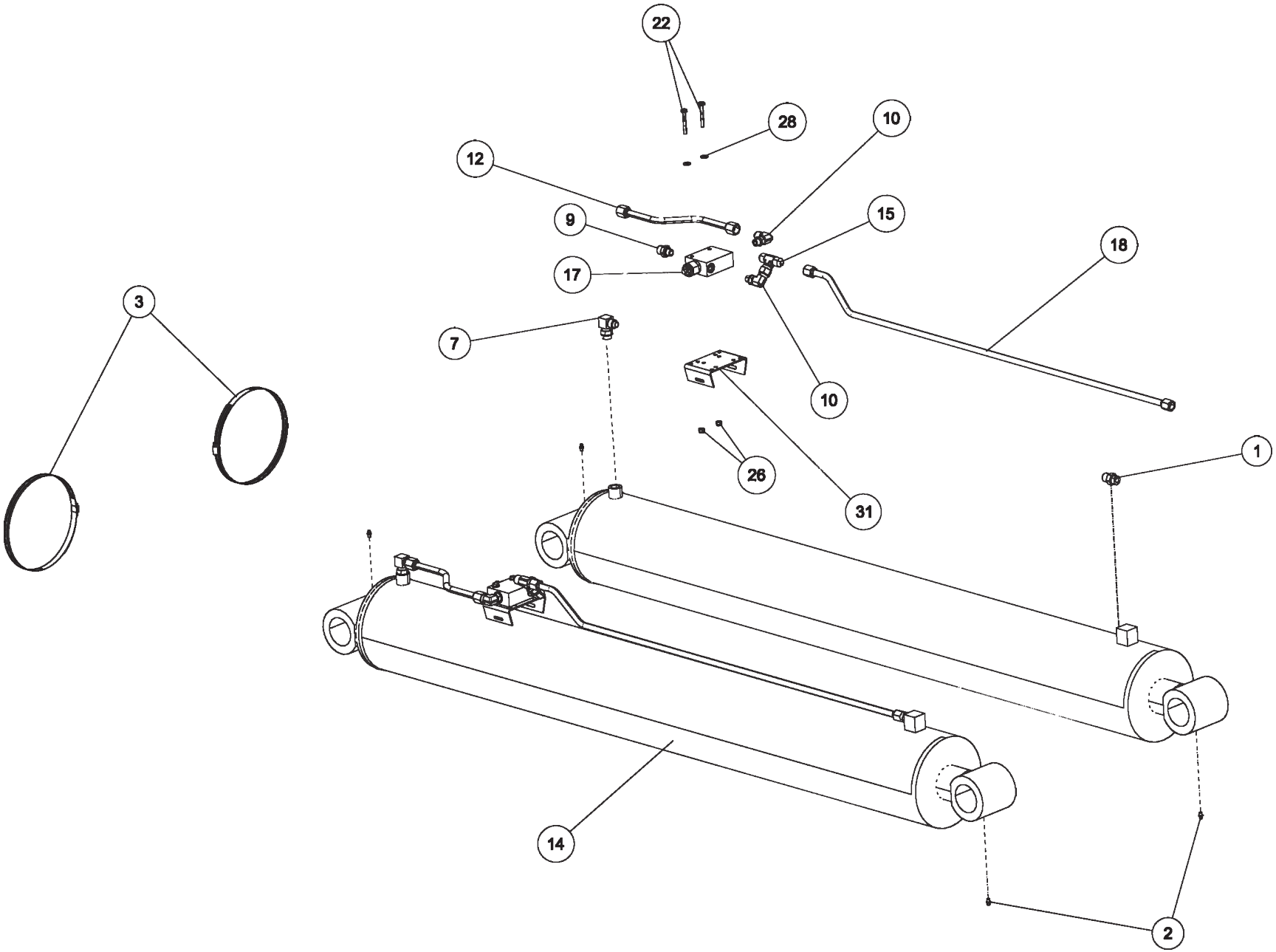

0910232 WRECKER FRAME ASSEMBLY 1140 (cont'd)

ITEM	PART NUMBER	DESCRIPTION	QTY
	0910232	WRECKER FRAME ASSEMBLY 1140	
1	0300041	CONNECTOR, 8MJ-8MB	2
2	0300113	GREASE FITTING, 1/4-28 STR	4
3	0300644	HOSE CLAMP,8 68452/I	2
4	0300659	HOSE HYD, 45"	2
5	0300787	HOSE HYD, 53" LG	4
6	0301376	CONNECTOR 8 MJ - 10 MB	2
7	0301388	ELBOW, 8MJ-8MB90	4
8	0301471	HOSE, 30" 8FJK-8M3K-8FJX90	3
9	0302275	FITTING, CONN 8MJ-6MB W/STEP	2
10	0302276	FITTING, ELB 90 DEG	4
11	0302313	HOSE HYD, 25"	7
12	0302568	HYD TUBING	2
13	0302574	FITTING-BULKHEAD RUN TEE	2
14	0302792	CYL HYD HEAVY/CHROME	2
15	0302796	FITTING, TEE	2
16	0303994	HOSE ASSY- 22"	1
17	0307107	VALVE, HOLDING 4000 PSI SAE	2
18	0307613	TUBING-HYD ASSY 1/2" DIA 9055	2
19	0310381	ALARM, SWING (ECCO DT500)	1
20	0311310	VALVE-ROTATE FLOW LIMITER	1
21	0400066	SCREW, 1/4-20X3/4 HHC GR5	6
22	0400078	SCREW, 1/4-20X2 HHC GR5	6
23	0400180	SCREW, 1/2-13X6 HHC GR5	1
24	0400206	SCREW, 1/2-13X5 HHC GR5	2
25	0400336	SCREW, 1-8X3 HHC GR8	38
26	0400367	NUT, 1/4-20 LOK	8
27	0400408	NUT, 1/2-13 LOK	3
28	0400451	WASHER, 1/4	10
29	0400452	LKWASHER, 1/4	4
30	0400522	WASHER, 1-1/16X2X1/8 TH YZ	38
31	0703001	BRKT, MTG CHECK VALVE	2
32	0708094	PIN, LIFT CYL	2
33	0719162	PLATE, ACCESS COVER	2
34	0722103	SHAFT - BOOM PIVOT	1
35	0807401	WRECKER FRAME WELDMENT	1
36	0910235	SWING DRIVE ASSEMBLY - 1140	1
37	0910236	SWING CONTROL VALVE ASSY -1140	1
38	0910238	SWING LIMIT VALVE ASSY - 1140	1
39	0911199	HYDRAULC SWIVEL PLATE ASY 1140	1
40	0911335	12V AIR SYSTEM KIT 1130/1140	1

0910232 WRECKER FRAME ASSEMBLY 1140

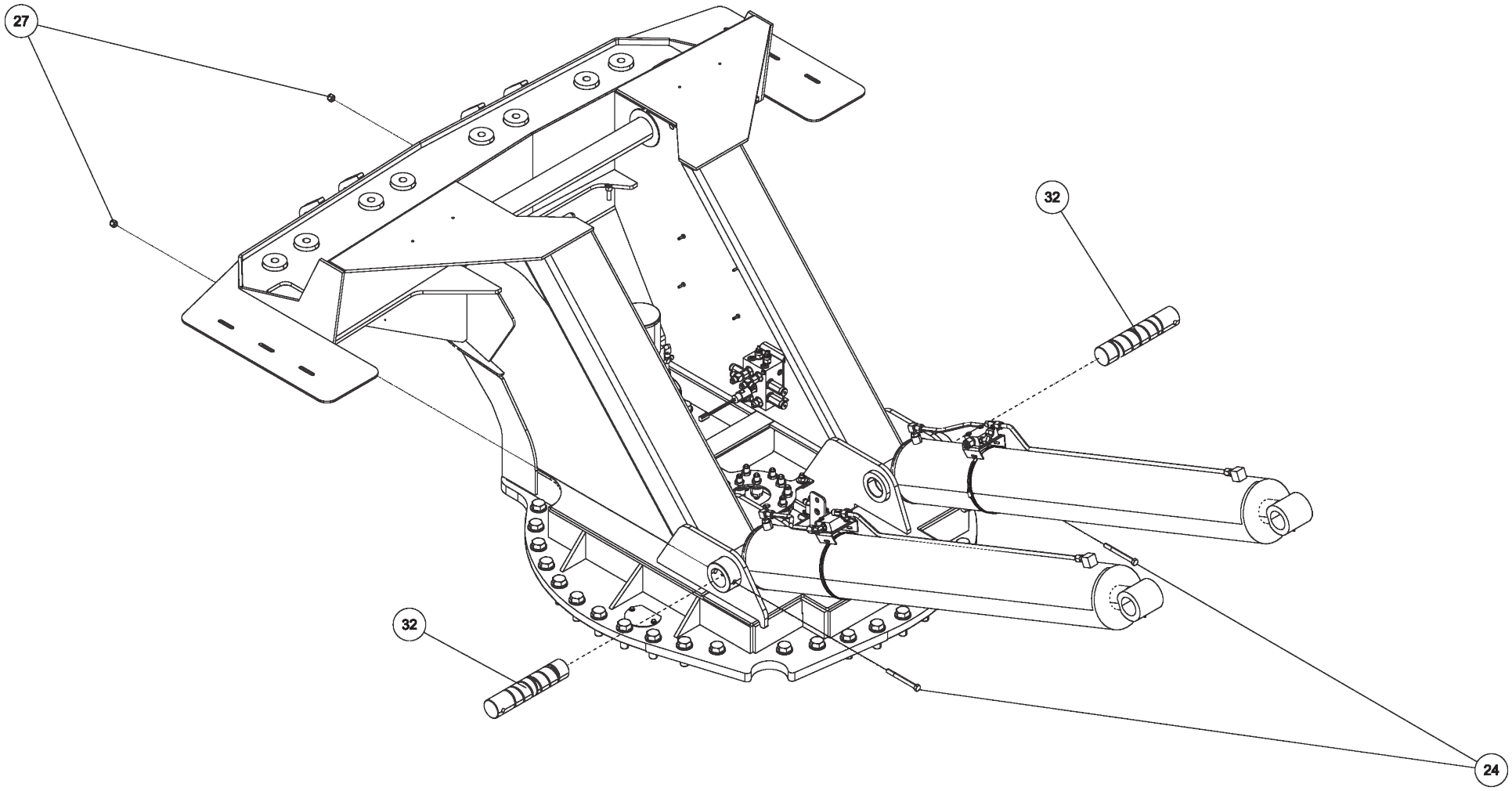

0910232 WRECKER FRAME ASSEMBLY 1140 (cont'd)

ITEM	PART NUMBER	DESCRIPTION	QTY
	0910232	WRECKER FRAME ASSEMBLY 1140	
1	0300041	CONNECTOR, 8MJ-8MB	2
2	0300113	GREASE FITTING, 1/4-28 STR	4
3	0300644	HOSE CLAMP,8 68452/I	2
4	0300659	HOSE HYD, 45"	2
5	0300787	HOSE HYD, 53" LG	4
6	0301376	CONNECTOR 8 MJ - 10 MB	2
7	0301388	ELBOW, 8MJ-8MB90	4
8	0301471	HOSE, 30" 8FJK-8M3K-8FJX90	3
9	0302275	FITTING, CONN 8MJ-6MB W/STEP	2
10	0302276	FITTING, ELB 90 DEG	4
11	0302313	HOSE HYD, 25"	7
12	0302568	HYD TUBING	2
13	0302574	FITTING-BULKHEAD RUN TEE	2
14	0302792	CYL HYD HEAVY/CHROME	2
15	0302796	FITTING, TEE	2
16	0303994	HOSE ASSY- 22"	1
17	0307107	VALVE, HOLDING 4000 PSI SAE	2
18	0307613	TUBING-HYD ASSY 1/2" DIA 9055	2
19	0310381	ALARM, SWING (ECCO DT500)	1
20	0311310	VALVE-ROTATE FLOW LIMITER	1
21	0400066	SCREW, 1/4-20X3/4 HHC GR5	6
22	0400078	SCREW, 1/4-20X2 HHC GR5	6
23	0400180	SCREW, 1/2-13X6 HHC GR5	1
24	0400206	SCREW, 1/2-13X5 HHC GR5	2
25	0400336	SCREW, 1-8X3 HHC GR8	38
26	0400367	NUT, 1/4-20 LOK	8
27	0400408	NUT, 1/2-13 LOK	3
28	0400451	WASHER, 1/4	10
29	0400452	LKWASHER, 1/4	4
30	0400522	WASHER, 1-1/16X2X1/8 TH YZ	38
31	0703001	BRKT, MTG CHECK VALVE	2
32	0708094	PIN, LIFT CYL	2
33	0719162	PLATE, ACCESS COVER	2
34	0722103	SHAFT - BOOM PIVOT	1
35	0807401	WRECKER FRAME WELDMENT	1
36	0910235	SWING DRIVE ASSEMBLY - 1140	1
37	0910236	SWING CONTROL VALVE ASSY -1140	1
38	0910238	SWING LIMIT VALVE ASSY - 1140	1
39	0911199	HYDRAULC SWIVEL PLATE ASY 1140	1
40	0911335	12V AIR SYSTEM KIT 1130/1140	1

0910232 WRECKER FRAME ASSEMBLY 1140

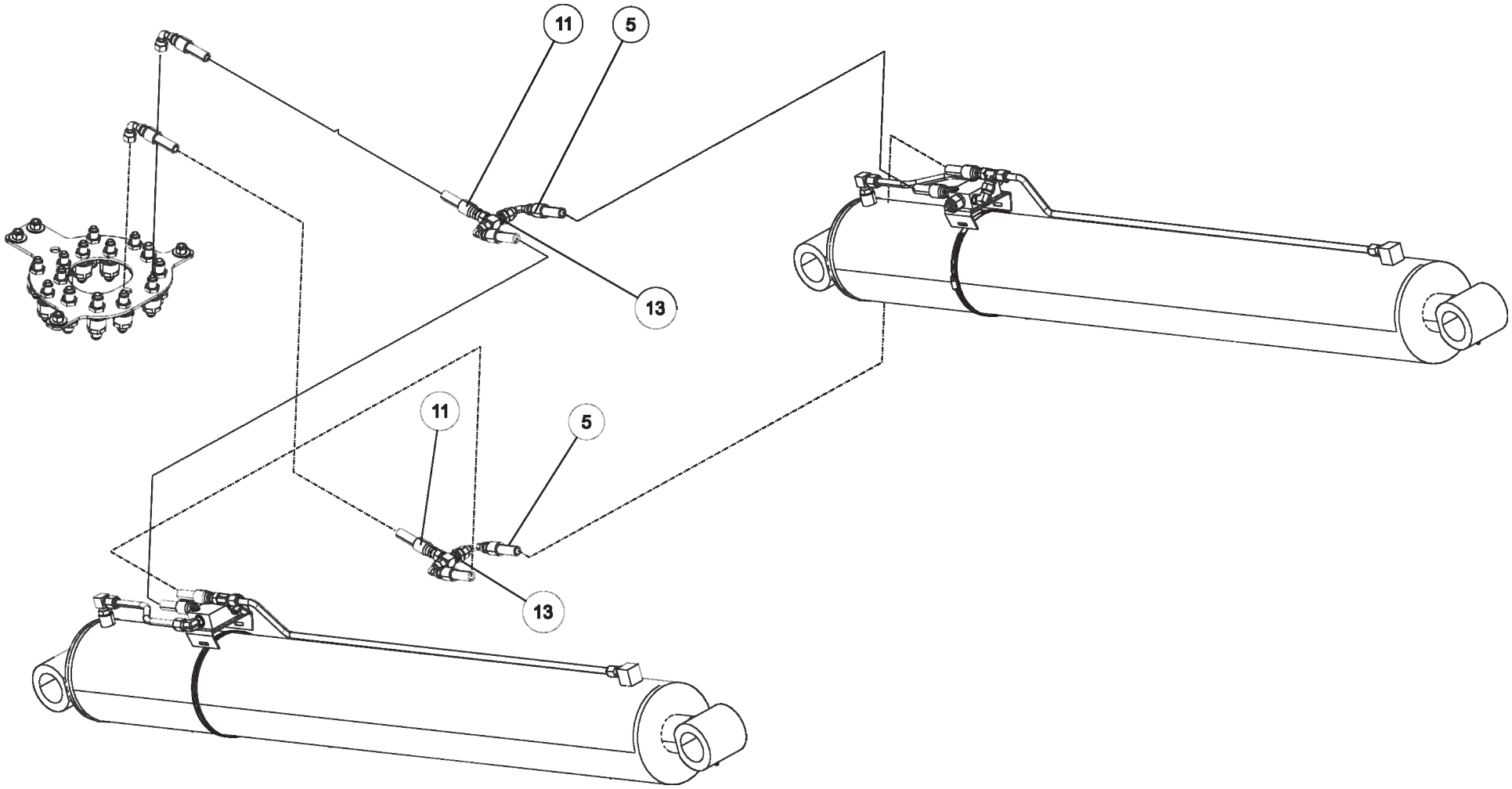

0910232 WRECKER FRAME ASSEMBLY 1140 (cont'd)

ITEM	PART NUMBER	DESCRIPTION	QTY
	0910232	WRECKER FRAME ASSEMBLY 1140	
1	0300041	CONNECTOR, 8MJ-8MB	2
2	0300113	GREASE FITTING, 1/4-28 STR	4
3	0300644	HOSE CLAMP,8 68452/I	2
4	0300659	HOSE HYD, 45"	2
5	0300787	HOSE HYD, 53" LG	4
6	0301376	CONNECTOR 8 MJ - 10 MB	2
7	0301388	ELBOW, 8MJ-8MB90	4
8	0301471	HOSE, 30" 8FJK-8M3K-8FJX90	3
9	0302275	FITTING, CONN 8MJ-6MB W/STEP	2
10	0302276	FITTING, ELB 90 DEG	4
11	0302313	HOSE HYD, 25"	7
12	0302568	HYD TUBING	2
13	0302574	FITTING-BULKHEAD RUN TEE	2
14	0302792	CYL HYD HEAVY/CHROME	2
15	0302796	FITTING, TEE	2
16	0303994	HOSE ASSY- 22"	1
17	0307107	VALVE, HOLDING 4000 PSI SAE	2
18	0307613	TUBING-HYD ASSY 1/2" DIA 9055	2
19	0310381	ALARM, SWING (ECCO DT500)	1
20	0311310	VALVE-ROTATE FLOW LIMITER	1
21	0400066	SCREW, 1/4-20X3/4 HHC GR5	6
22	0400078	SCREW, 1/4-20X2 HHC GR5	6
23	0400180	SCREW, 1/2-13X6 HHC GR5	1
24	0400206	SCREW, 1/2-13X5 HHC GR5	2
25	0400336	SCREW, 1-8X3 HHC GR8	38
26	0400367	NUT, 1/4-20 LOK	8
27	0400408	NUT, 1/2-13 LOK	3
28	0400451	WASHER, 1/4	10
29	0400452	LKWASHER, 1/4	4
30	0400522	WASHER, 1-1/16X2X1/8 TH YZ	38
31	0703001	BRKT, MTG CHECK VALVE	2
32	0708094	PIN, LIFT CYL	2
33	0719162	PLATE, ACCESS COVER	2
34	0722103	SHAFT - BOOM PIVOT	1
35	0807401	WRECKER FRAME WELDMENT	1
36	0910235	SWING DRIVE ASSEMBLY - 1140	1
37	0910236	SWING CONTROL VALVE ASSY -1140	1
38	0910238	SWING LIMIT VALVE ASSY - 1140	1
39	0911199	HYDRAULC SWIVEL PLATE ASY 1140	1
40	0911335	12V AIR SYSTEM KIT 1130/1140	1

0910235 SWING DRIVE ASSEMBLY

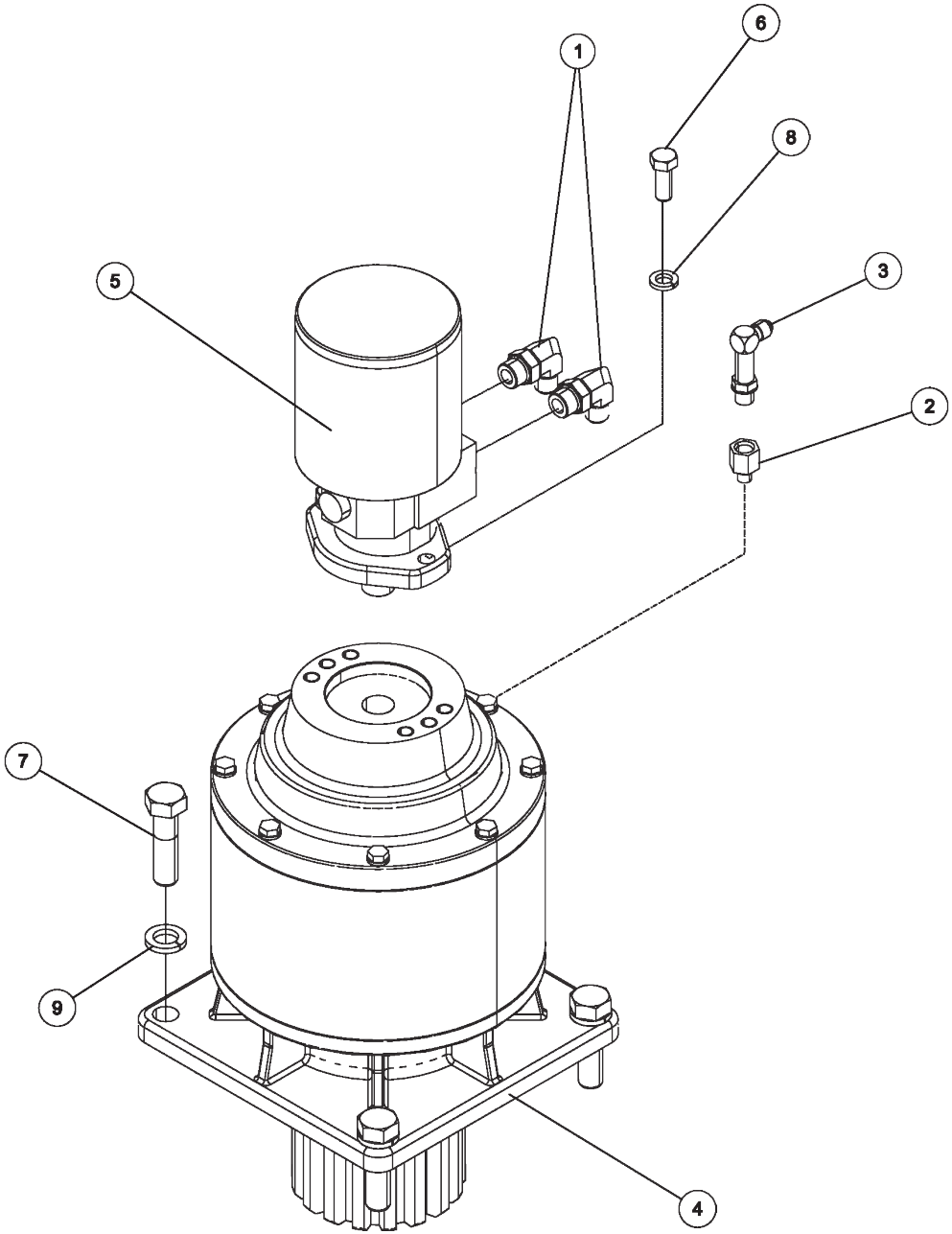

0910235 SWING DRIVE ASSEMBLY (cont'd)

ITEM	PART NUMBER	DESCRIPTION	QTY
	0910235	SWING DRIVE ASSEMBLY 1140	
1	0300052	FITTING, ELB 8MJ-10MB 90	2
2	0307106	FITT, CONNECTOR 4MB-6FB	1
3	0307460	FITTING, HYD 6MJ-6MB90LL	1
4	0310334	PLANETARY GEARBOX - 1040S	1
5	0310335	MOTOR,HYD TF0405AS010AAAB PARK	1
6	0400177	SCREW, 1/2-13X1-1/4 HHC GR5	2
7	0400286	SCREW, 3/4-10X2-3/4 HHC GR8	4
8	0400491	LKWASHER, 1/2	2
9	0400511	LKWASHER, 3/4	4

0910236 SWING CONTROL VALVE ASSEMBLY

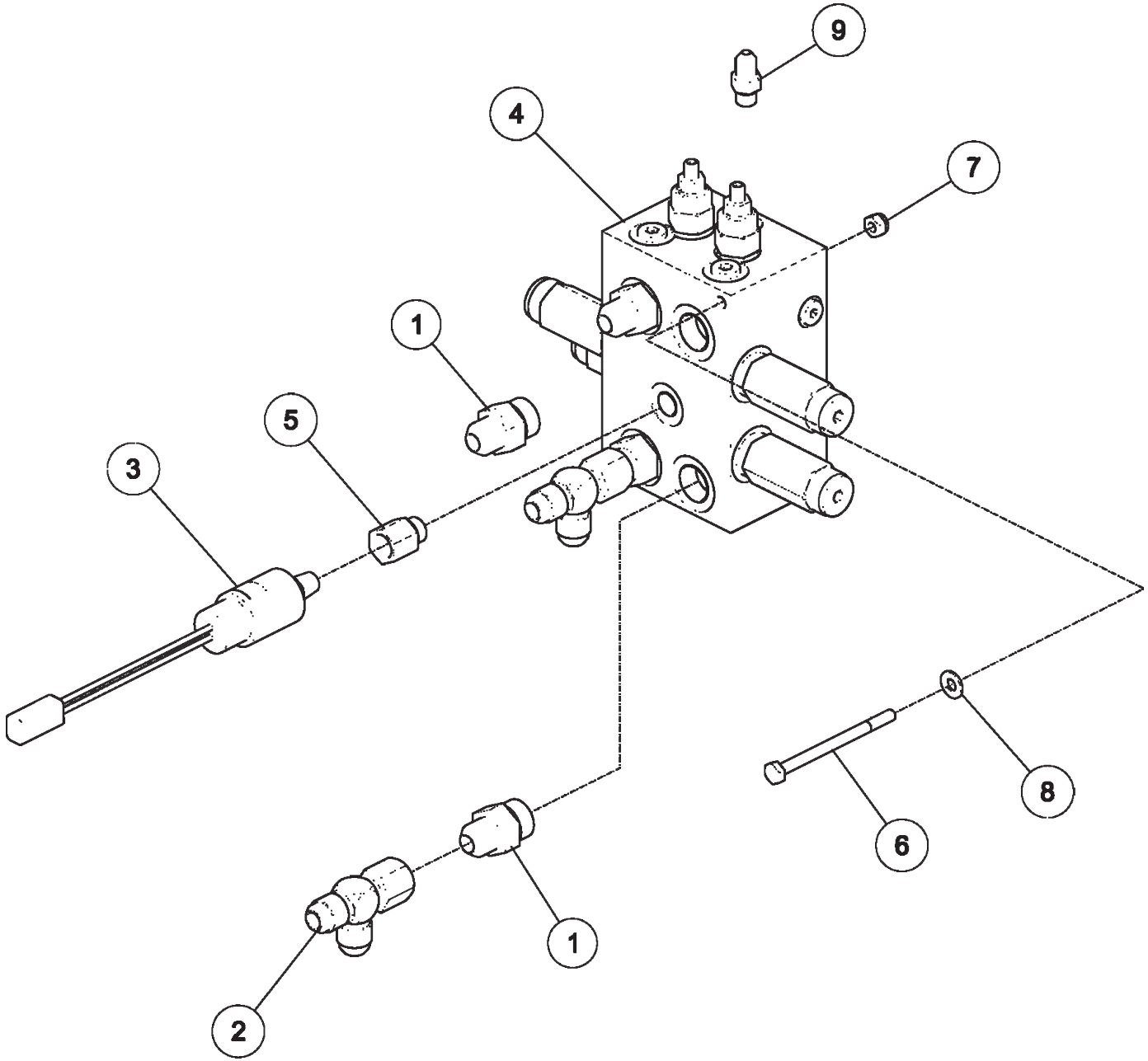

0910236 SWING CONTROL VALVE ASSEMBLY (cont'd)

ITEM	PART NUMBER	DESCRIPTION	QTY
	0910236	SWING CONTROL VALVE ASSY 1140	
1	0301376	CONNECTOR 8 MJ - 10 MB	4
2	0302052	TEE, 8MJ-8FJX-8MJ RUN	2
3	0310318	SWITCH - PRESSURE	1
4	0310337	SWING CONTROL VALVE	1
5	0310634	FITTING 6MB-4FP	1
6	0400081	SCREW, 1/4-20X3-1/2 HHC GR5	2
7	0400367	NUT, 1/4-20 LOK	2
8	0400451	WASHER, 1/4	2
9	HC1291	FITTING, 4MJ-4MB STR THR	1

0910238 SWING LIMIT VALVE ASSEMBLY

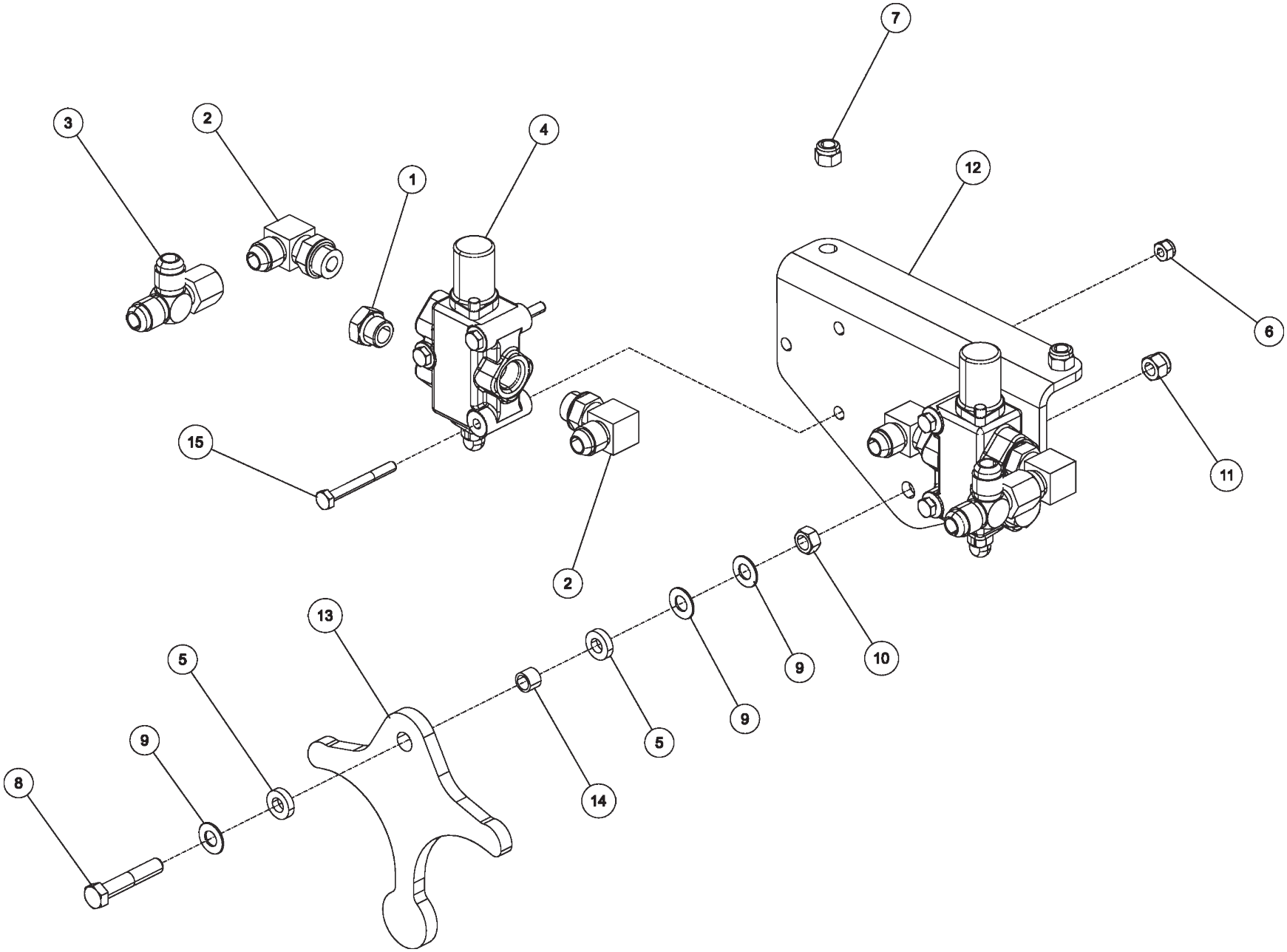

0910238 SWING LIMIT VALVE ASSEMBLY (cont'd)

ITEM	PART NUMBER	DESCRIPTION	QTY
	0910238	SWING LIMIT VALVE ASSY 1140	
1	0300387	PLUG, 8MB	2
2	0301388	ELBOW, 8MJ-8MB90	4
3	0302052	TEE, 8MJ-8FJX-8MJ RUN	2
4	0310336	VALVE, DIVERTER	2
5	0310565	SPACER, 3/8ID X 3/4OD X 3/16	2
6	0400367	NUT, 1/4-20 LOK	6
7	0400392	NUT, 3/8-16 LOK	2
8	0402046	SCREW, 3/8-16X2 HHC SS	1
9	0402120	WASHER, 3/8 SS	3
10	0402122	NUT, 3/8-16 HEX SS	1
11	0402123	NUT, 3/8-16 LOK SS	1
12	07000402	ANGLE - SWING LIMIT MOUNTING	1
13	0721687	PLATE - SWING LIMIT CAM	1
14	561-0380002	BEARING, BRONZE 3/8 IDx1/2 OD	1
15	9041010	1/4 NC X 2 1/4 HHCS GR8	6

0911199 HYDRAULIC SWIVEL PLATE ASSEMBLY

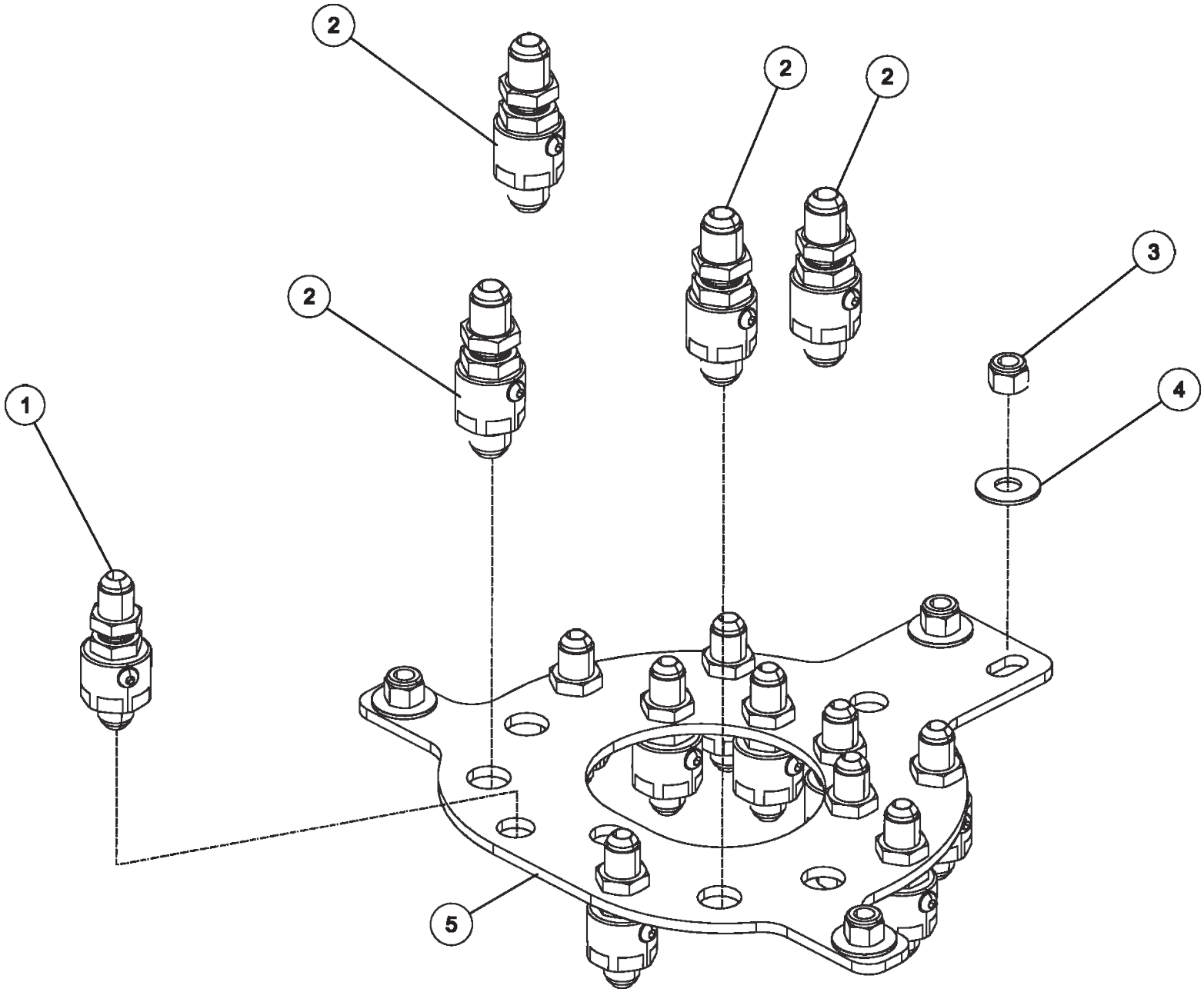

0911199 HYDRAULIC SWIVEL PLATE ASSEMBLY (cont'd)

ITEM	PART NUMBER	DESCRIPTION	QTY
	0911199	HYDRAULIC SWIVEL PLATE ASSEMBLY 1140	
1	0310371	SWIVEL, INLINE - 8MJ BULKHEAD	10
2	0310372	SWIVEL, INLINE - 10MJ BULKHEAD	4
3	0400408	NUT, 1/2-13 LOK	4
4	0400492	USS FLAT WASHER, 1/2	4
5	0724503	PLATE-HYD SWIVEL MTG	1

0911335 12V AIR SYSTEM KIT

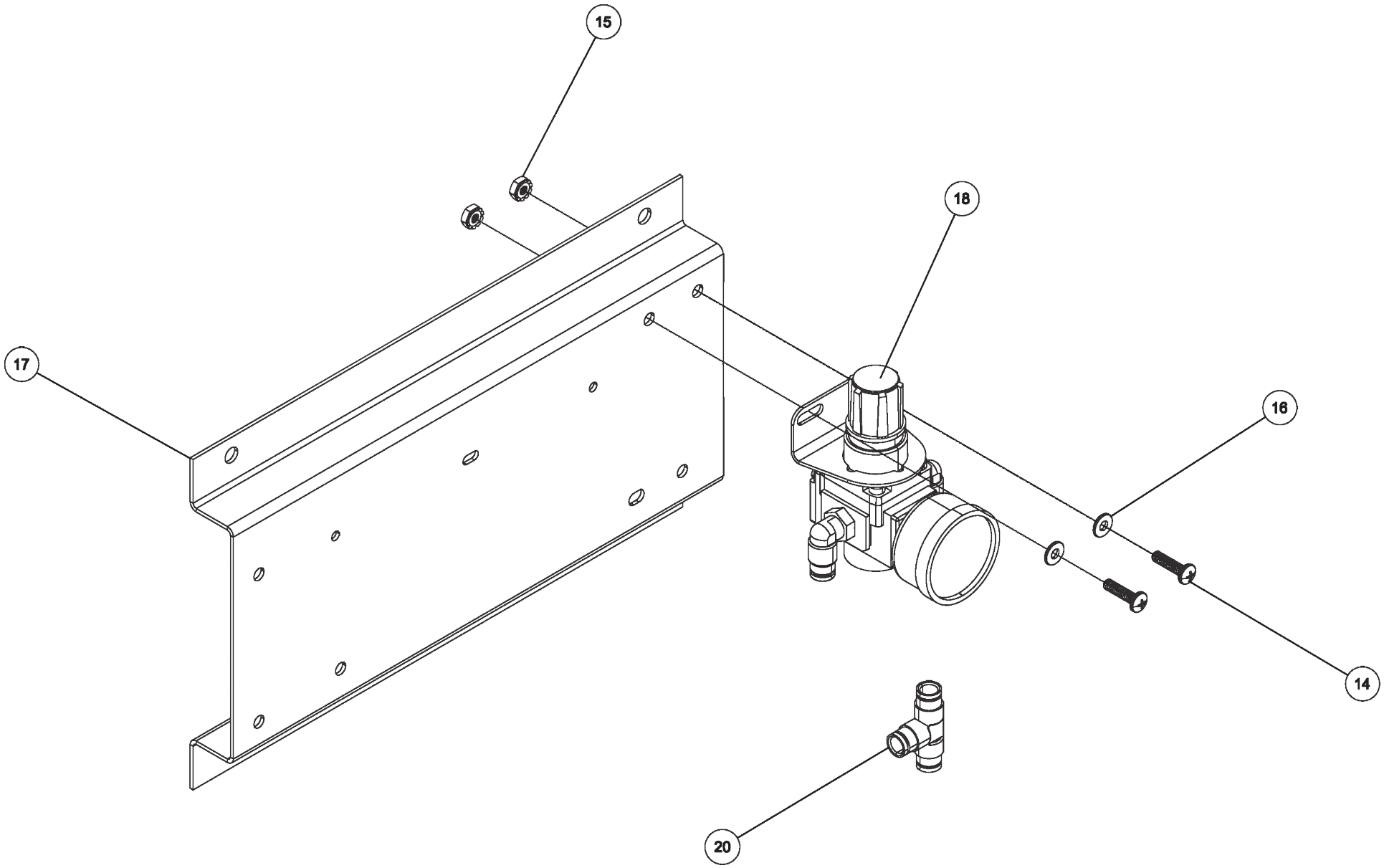

0911335 12V AIR SYSTEM KIT (cont'd)

ITEM	PART NUMBER	DESCRIPTION	QTY
	0911335	12V AIR SYSTEM KIT 1140	
1	0302677	BREATHER VENT 1/8 MP	2
2	0306977	FITTING BRASS PLUG 1/8	3
3	0306978	TERMINAL BLOCK W/SCREW	1
4	0310192	AIR SOL STK 12VDC 4 BANK	1
5	0310381	ALARM, SWING (ECCO DT500)	1
6	0400009	SCREW, 8-32X1-1/2 PRH SS	2
7	0400066	SCREW, 1/4-20X3/4 HHC GR5	2
8	0400070	SCREW, 1/4-20X1 HHC GR5	1
9	0400351	NUT, 8-32 HEX	2
10	0400366	NUT, 1/4-20 HEX	1
11	0400367	NUT, 1/4-20 LOK	7
12	0400451	WASHER, 1/4	6
13	0400458	LKWASHER, 1/4 EXT	1
14	0400687	SCREW, 10-24X3/4 PRH SS	4
15	0400752	NUT, 10-24 LOK EXT	4
16	0400816	WASHER, M10 SS	2
17	0711277	SUPPORT, SOLENOID VALVE	1
18	0911804	AIR REGULATOR-GAUGE ASSEMBLY	1
19	9010030	FITT, BRASS ELBOW 1/4T-1/8MPX	1
20	9011071	FITT, BRASS TEE 1/4T-1/4T-1/4T	1

0911335 12V AIR SYSTEM KIT

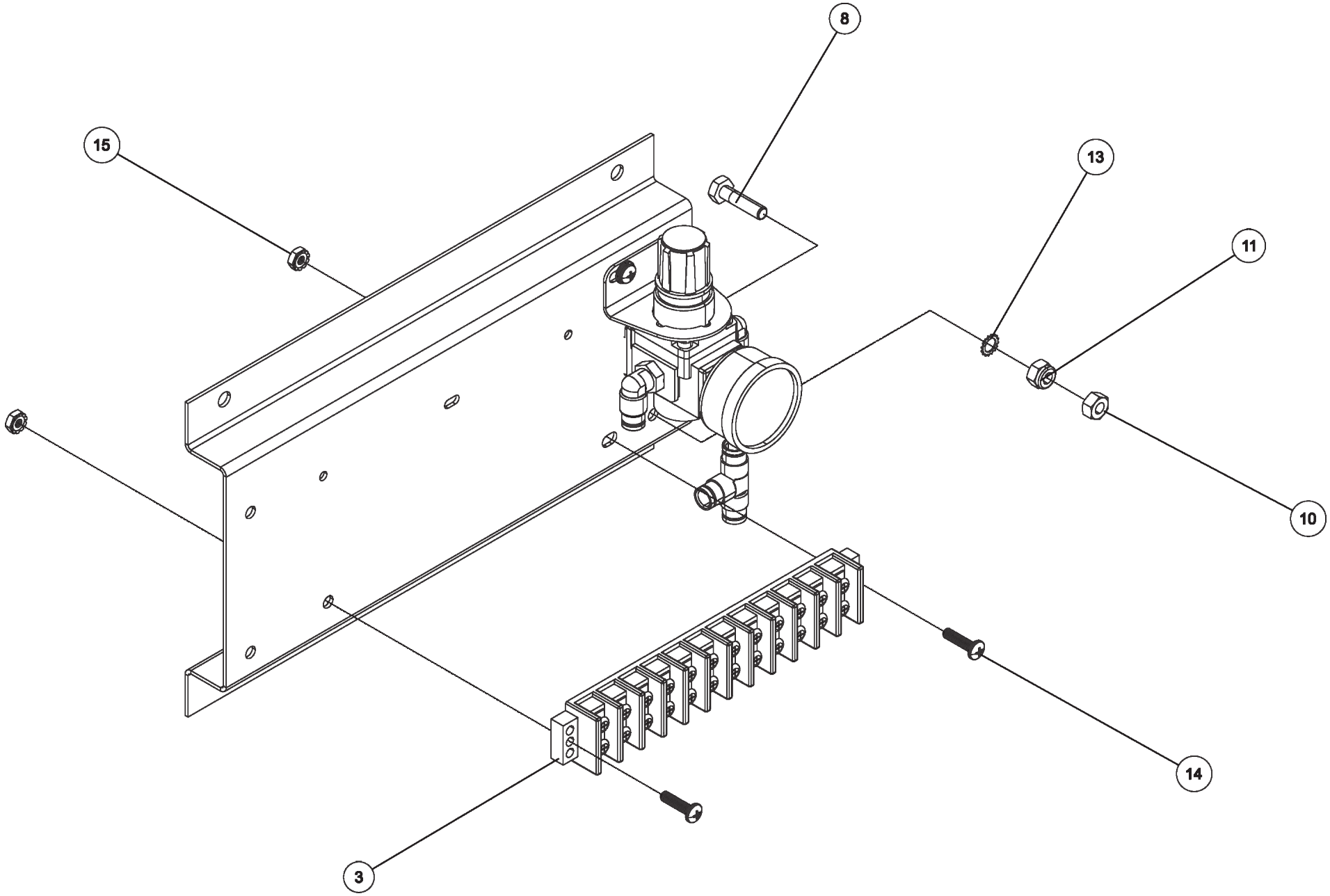

0911335 12V AIR SYSTEM KIT (cont'd)

ITEM	PART NUMBER	DESCRIPTION	QTY
	0911335	12V AIR SYSTEM KIT 1140	
1	0302677	BREATHER VENT 1/8 MP	2
2	0306977	FITTING BRASS PLUG 1/8	3
3	0306978	TERMINAL BLOCK W/SCREW	1
4	0310192	AIR SOL STK 12VDC 4 BANK	1
5	0310381	ALARM, SWING (ECCO DT500)	1
6	0400009	SCREW, 8-32X1-1/2 PRH SS	2
7	0400066	SCREW, 1/4-20X3/4 HHC GR5	2
8	0400070	SCREW, 1/4-20X1 HHC GR5	1
9	0400351	NUT, 8-32 HEX	2
10	0400366	NUT, 1/4-20 HEX	1
11	0400367	NUT, 1/4-20 LOK	7
12	0400451	WASHER, 1/4	6
13	0400458	LKWASHER, 1/4 EXT	1
14	0400687	SCREW, 10-24X3/4 PRH SS	4
15	0400752	NUT, 10-24 LOK EXT	4
16	0400816	WASHER, M10 SS	2
17	0711277	SUPPORT, SOLENOID VALVE	1
18	0911804	AIR REGULATOR-GAUGE ASSEMBLY	1
19	9010030	FITT, BRASS ELBOW 1/4T-1/8MPX	1
20	9011071	FITT, BRASS TEE 1/4T-1/4T-1/4T	1

0911335 12V AIR SYSTEM KIT

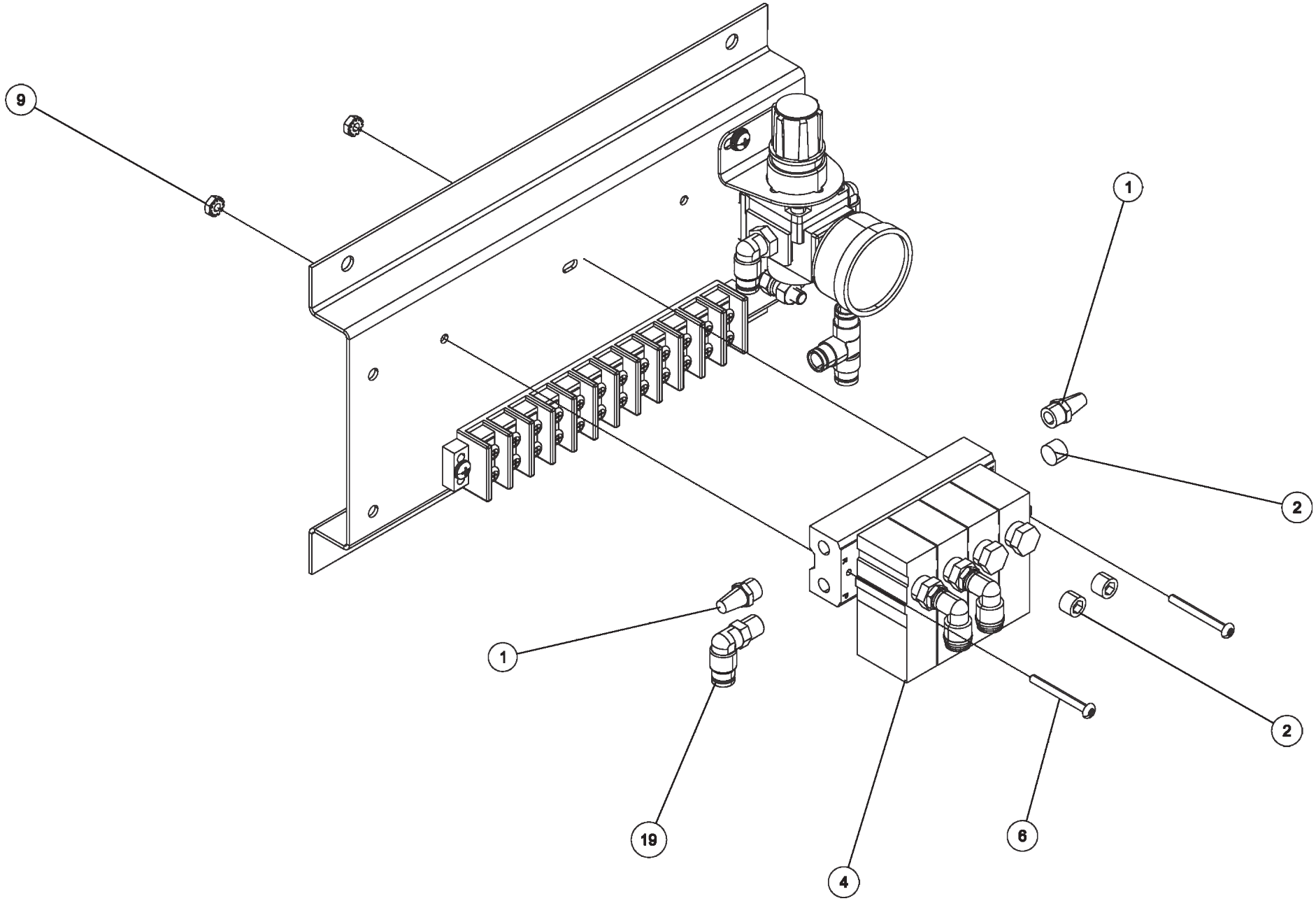

0911335 12V AIR SYSTEM KIT (cont'd)

ITEM	PART NUMBER	DESCRIPTION	QTY
	0911335	12V AIR SYSTEM KIT 1140	
1	0302677	BREATHER VENT 1/8 MP	2
2	0306977	FITTING BRASS PLUG 1/8	3
3	0306978	TERMINAL BLOCK W/SCREW	1
4	0310192	AIR SOL STK 12VDC 4 BANK	1
5	0310381	ALARM, SWING (ECCO DT500)	1
6	0400009	SCREW, 8-32X1-1/2 PRH SS	2
7	0400066	SCREW, 1/4-20X3/4 HHC GR5	2
8	0400070	SCREW, 1/4-20X1 HHC GR5	1
9	0400351	NUT, 8-32 HEX	2
10	0400366	NUT, 1/4-20 HEX	1
11	0400367	NUT, 1/4-20 LOK	7
12	0400451	WASHER, 1/4	6
13	0400458	LKWASHER, 1/4 EXT	1
14	0400687	SCREW, 10-24X3/4 PRH SS	4
15	0400752	NUT, 10-24 LOK EXT	4
16	0400816	WASHER, M10 SS	2
17	0711277	SUPPORT, SOLENOID VALVE	1
18	0911804	AIR REGULATOR-GAUGE ASSEMBLY	1
19	9010030	FITT, BRASS ELBOW 1/4T-1/8MPX	1
20	9011071	FITT, BRASS TEE 1/4T-1/4T-1/4T	1

0911335 12V AIR SYSTEM KIT

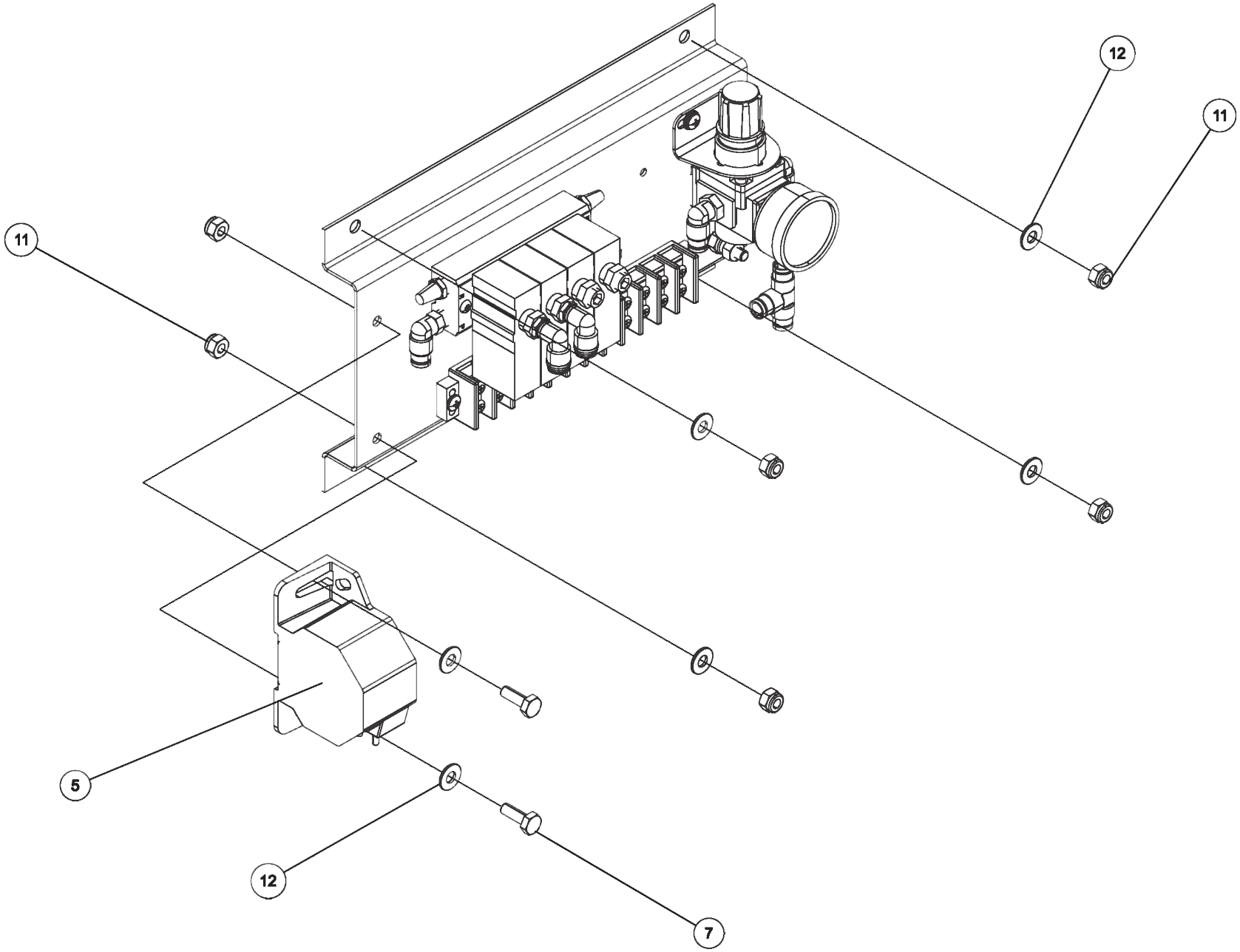

0911335 12V AIR SYSTEM KIT (cont'd)

ITEM	PART NUMBER	DESCRIPTION	QTY
	0911335	12V AIR SYSTEM KIT 1140	
1	0302677	BREATHER VENT 1/8 MP	2
2	0306977	FITTING BRASS PLUG 1/8	3
3	0306978	TERMINAL BLOCK W/SCREW	1
4	0310192	AIR SOL STK 12VDC 4 BANK	1
5	0310381	ALARM, SWING (ECCO DT500)	1
6	0400009	SCREW, 8-32X1-1/2 PRH SS	2
7	0400066	SCREW, 1/4-20X3/4 HHC GR5	2
8	0400070	SCREW, 1/4-20X1 HHC GR5	1
9	0400351	NUT, 8-32 HEX	2
10	0400366	NUT, 1/4-20 HEX	1
11	0400367	NUT, 1/4-20 LOK	7
12	0400451	WASHER, 1/4	6
13	0400458	LKWASHER, 1/4 EXT	1
14	0400687	SCREW, 10-24X3/4 PRH SS	4
15	0400752	NUT, 10-24 LOK EXT	4
16	0400816	WASHER, M10 SS	2
17	0711277	SUPPORT, SOLENOID VALVE	1
18	0911804	AIR REGULATOR-GAUGE ASSEMBLY	1
19	9010030	FITT, BRASS ELBOW 1/4T-1/8MPX	1
20	9011071	FITT, BRASS TEE 1/4T-1/4T-1/4T	1

0910411 REAR OUTRIGGER 4-STAGE ASSEMBLY

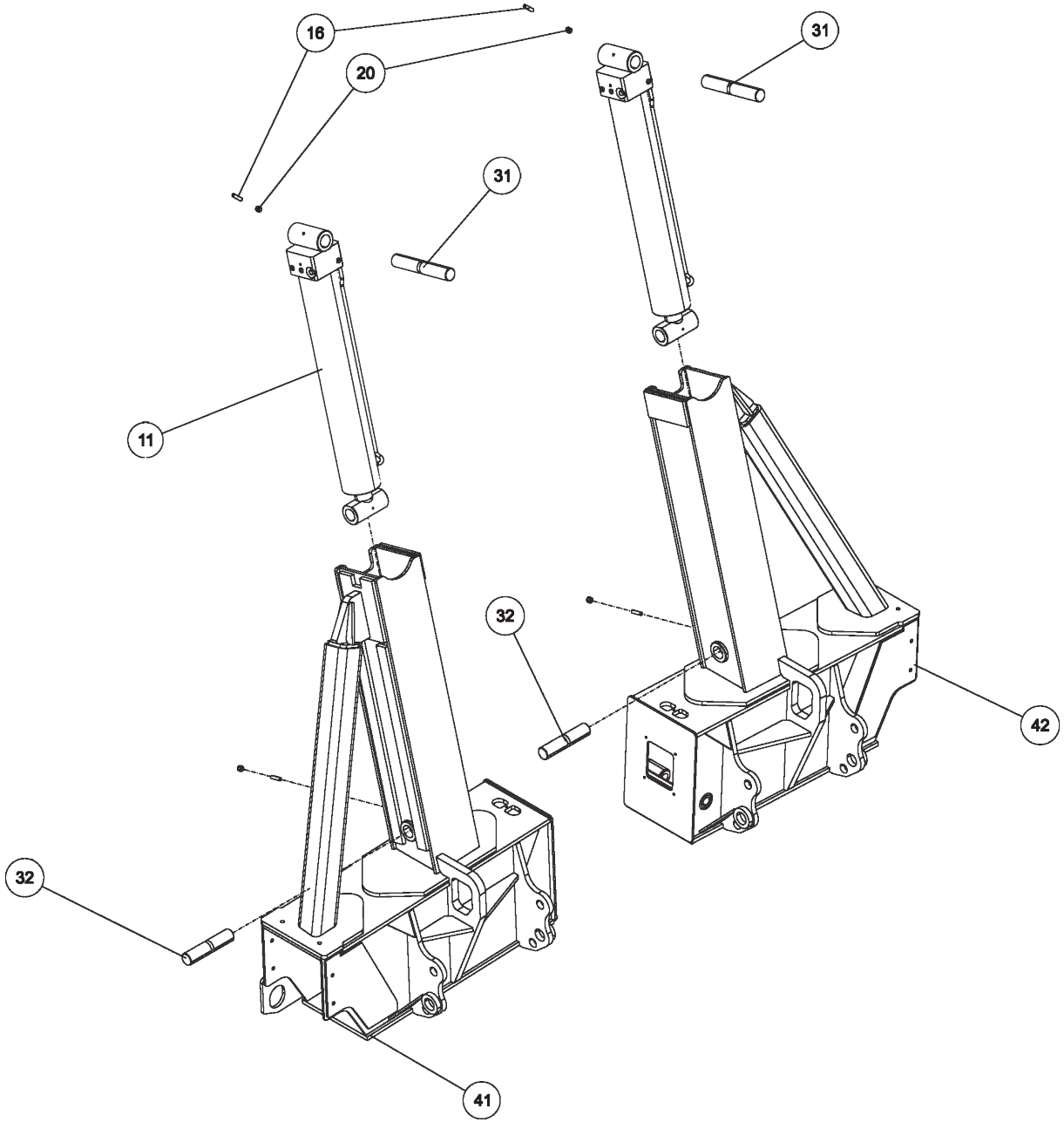

0910411 REAR OUTRIGGER 4-STAGE ASSEMBLY (cont'd)

ITEM	PART NUMBER	DESCRIPTION	QTY
	0910411	REAR OUTRIGGER 4 STAGE	
1	0300110	SNAP RING, 1" 5100-100	8
2	0300113	GREASE FITTING, 1/4-28 STR	2
3	0301422	FITTING, 6MJ-6MJ SMALL	4
4	0301522	ADAPTER, 6MJ-6MB	4
5	03015922	STAUFF CLAMP, 3/8 TWIN	4
6	03016101	TUBE, HYD ASSY REAR O/R RH EXT	1
7	03016102	TUBE, HYD ASSY REAR O/R RH RET	1
8	03016103	TUBE, HYD ASSY REAR O/R LH RET	1
9	03016104	TUBE, HYD ASSY REAR O/R LH EXT	1
10	0310289	FITTING-LONG ADAPTER 6MJ-8MBLL	4
11	0310707	CYLINDER, SPADE 4BOREx23STROKE	2
12	0312677	CYLINDER,TELESCOPING PIGGYBACK	2
13	0400066	SCREW, 1/4-20X3/4 HHC GR5	24
14	0400070	SCREW, 1/4-20X1 HHC GR5	2
15	0400122	SCREW, 3/8-16X1-1/4 HHC GR5	4
16	0400139	SET SCREW, 3/8-16X1-1/2 SOC	4
17	0400221	SET SCREW, 3/8-16X1 SOC	2
18	0400228	SCREW, 3/8-24X5/8 BSC	8
19	0400347	SCREW, 3/8-24X7/8 HHC GR5	8
20	0400392	NUT, 3/8-16 LOK	4
21	0400398	NUT, 3/8-16 LOK JAM	2
22	0400452	LKWASHER, 1/4	26
23	0400481	LKWASHER, 3/8 EXT	12
24	07000099	TEL BLOCK, STAGE 3	8
25	07000162	SHAFT, 1 DIA X 5-1/2 L	2
26	07000283	SHIM	2
27	07020904	PLATE, HARDLINE COVER RH	1
28	07020905	PLATE, HARDLINE COVER LH	1
29	0703231	PLATE, STOP OUTER BOOM	4
30	0707117	SHAFT, UPPER SPADE	2
31	0721901	PIN - OUTRIGGER TOP	2
32	0721902	PIN - OUTRIGGER BOTTOM	2
33	0722970	PAD,SPACER	4
34	0723889	PLATE-HOSE RETAINING	4
35	0725043	PLATE-COVER	2
36	0727421	SHAFT, 1 DIA X 7 L	2
37	0807311	STAGE 4 ASSEMBLY WLDMT	2
38	0807312	STAGE 3 ASSEMBLY WLDMT	2
39	0807313	STAGE 2 ASSEMBLY WLDMT	2
40	0807635	PAD REAR OUTRIGGER PAD	2
41	0810584	ST1 ASSY WLDMT, LH 1.5 BOSS'15	1
42	0810585	ST1 ASSY WLDMT, RH 1.5 BOSS'15	1
43	0906963	PIN - REAR OUTRIGGER PAD ASSY	1
44	0912051	CENTURY SPADE KIT	1
45	GH246	SPLIT RUBBER GROMMET	4

0910411 REAR OUTRIGGER 4-STAGE ASSEMBLY

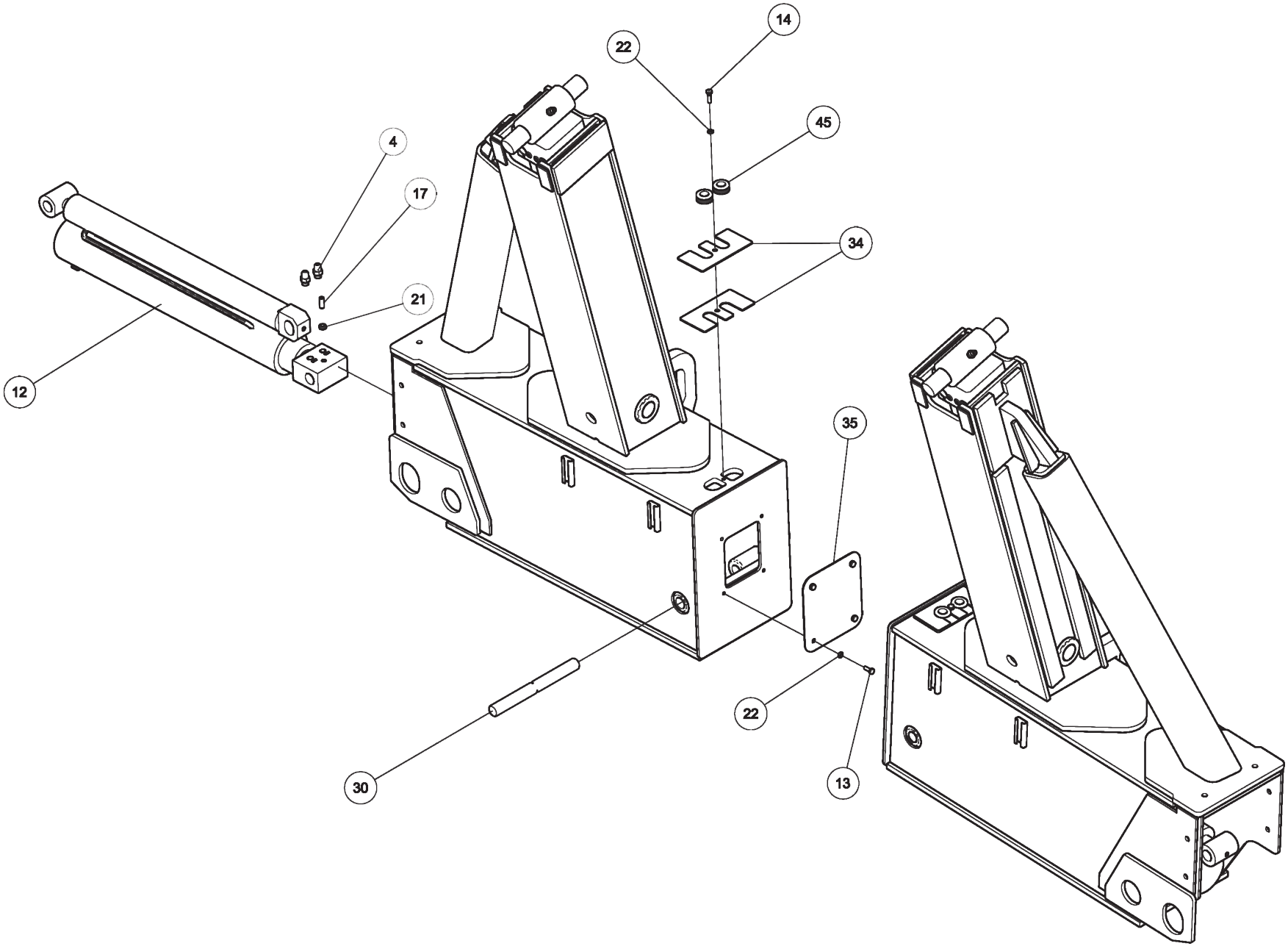

0910411 REAR OUTRIGGER 4-STAGE ASSEMBLY (cont'd)

ITEM	PART NUMBER	DESCRIPTION	QTY
	0910411	REAR OUTRIGGER 4 STAGE	
1	0300110	SNAP RING, 1" 5100-100	8
2	0300113	GREASE FITTING, 1/4-28 STR	2
3	0301422	FITTING, 6MJ-6MJ SMALL	4
4	0301522	ADAPTER, 6MJ-6MB	4
5	03015922	STAUFF CLAMP, 3/8 TWIN	4
6	03016101	TUBE, HYD ASSY REAR O/R RH EXT	1
7	03016102	TUBE, HYD ASSY REAR O/R RH RET	1
8	03016103	TUBE, HYD ASSY REAR O/R LH RET	1
9	03016104	TUBE, HYD ASSY REAR O/R LH EXT	1
10	0310289	FITTING-LONG ADAPTER 6MJ-8MBLL	4
11	0310707	CYLINDER, SPADE 4BOREx23STROKE	2
12	0312677	CYLINDER,TELESCOPING PIGGYBACK	2
13	0400066	SCREW, 1/4-20X3/4 HHC GR5	24
14	0400070	SCREW, 1/4-20X1 HHC GR5	2
15	0400122	SCREW, 3/8-16X1-1/4 HHC GR5	4
16	0400139	SET SCREW, 3/8-16X1-1/2 SOC	4
17	0400221	SET SCREW, 3/8-16X1 SOC	2
18	0400228	SCREW, 3/8-24X5/8 BSC	8
19	0400347	SCREW, 3/8-24X7/8 HHC GR5	8
20	0400392	NUT, 3/8-16 LOK	4
21	0400398	NUT, 3/8-16 LOK JAM	2
22	0400452	LKWASHER, 1/4	26
23	0400481	LKWASHER, 3/8 EXT	12
24	07000099	TEL BLOCK, STAGE 3	8
25	07000162	SHAFT, 1 DIA X 5-1/2 L	2
26	07000283	SHIM	2
27	07020904	PLATE, HARDLINE COVER RH	1
28	07020905	PLATE, HARDLINE COVER LH	1
29	0703231	PLATE, STOP OUTER BOOM	4
30	0707117	SHAFT, UPPER SPADE	2
31	0721901	PIN - OUTRIGGER TOP	2
32	0721902	PIN - OUTRIGGER BOTTOM	2
33	0722970	PAD,SPACER	4
34	0723889	PLATE-HOSE RETAINING	4
35	0725043	PLATE-COVER	2
36	0727421	SHAFT, 1 DIA X 7 L	2
37	0807311	STAGE 4 ASSEMBLY WLDMT	2
38	0807312	STAGE 3 ASSEMBLY WLDMT	2
39	0807313	STAGE 2 ASSEMBLY WLDMT	2
40	0807635	PAD REAR OUTRIGGER PAD	2
41	0810584	ST1 ASSY WLDMT, LH 1.5 BOSS'15	1
42	0810585	ST1 ASSY WLDMT, RH 1.5 BOSS'15	1
43	0906963	PIN - REAR OUTRIGGER PAD ASSY	1
44	0912051	CENTURY SPADE KIT	1
45	GH246	SPLIT RUBBER GROMMET	4

0910411 REAR OUTRIGGER 4-STAGE ASSEMBLY

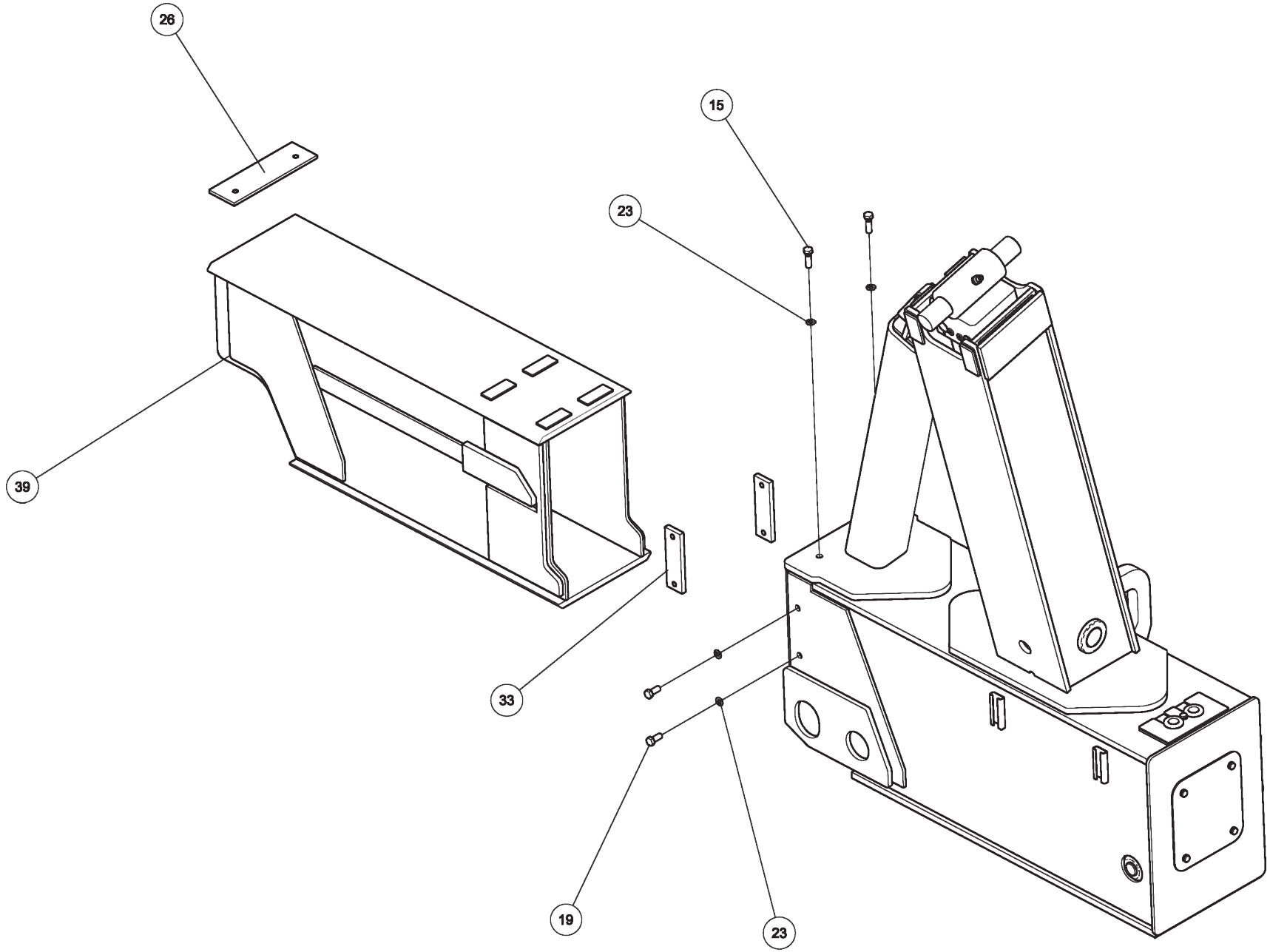

0910411 REAR OUTRIGGER 4-STAGE ASSEMBLY (cont'd)

ITEM	PART NUMBER	DESCRIPTION	QTY
	0910411	REAR OUTRIGGER 4 STAGE	
1	0300110	SNAP RING, 1" 5100-100	8
2	0300113	GREASE FITTING, 1/4-28 STR	2
3	0301422	FITTING, 6MJ-6MJ SMALL	4
4	0301522	ADAPTER, 6MJ-6MB	4
5	03015922	STAUFF CLAMP, 3/8 TWIN	4
6	03016101	TUBE, HYD ASSY REAR O/R RH EXT	1
7	03016102	TUBE, HYD ASSY REAR O/R RH RET	1
8	03016103	TUBE, HYD ASSY REAR O/R LH RET	1
9	03016104	TUBE, HYD ASSY REAR O/R LH EXT	1
10	0310289	FITTING-LONG ADAPTER 6MJ-8MBLL	4
11	0310707	CYLINDER, SPADE 4BOREx23STROKE	2
12	0312677	CYLINDER,TELESCOPING PIGGYBACK	2
13	0400066	SCREW, 1/4-20X3/4 HHC GR5	24
14	0400070	SCREW, 1/4-20X1 HHC GR5	2
15	0400122	SCREW, 3/8-16X1-1/4 HHC GR5	4
16	0400139	SET SCREW, 3/8-16X1-1/2 SOC	4
17	0400221	SET SCREW, 3/8-16X1 SOC	2
18	0400228	SCREW, 3/8-24X5/8 BSC	8
19	0400347	SCREW, 3/8-24X7/8 HHC GR5	8
20	0400392	NUT, 3/8-16 LOK	4
21	0400398	NUT, 3/8-16 LOK JAM	2
22	0400452	LKWASHER, 1/4	26
23	0400481	LKWASHER, 3/8 EXT	12
24	07000099	TEL BLOCK, STAGE 3	8
25	07000162	SHAFT, 1 DIA X 5-1/2 L	2
26	07000283	SHIM	2
27	07020904	PLATE, HARDLINE COVER RH	1
28	07020905	PLATE, HARDLINE COVER LH	1
29	0703231	PLATE, STOP OUTER BOOM	4
30	0707117	SHAFT, UPPER SPADE	2
31	0721901	PIN - OUTRIGGER TOP	2
32	0721902	PIN - OUTRIGGER BOTTOM	2
33	0722970	PAD,SPACER	4
34	0723889	PLATE-HOSE RETAINING	4
35	0725043	PLATE-COVER	2
36	0727421	SHAFT, 1 DIA X 7 L	2
37	0807311	STAGE 4 ASSEMBLY WLDMT	2
38	0807312	STAGE 3 ASSEMBLY WLDMT	2
39	0807313	STAGE 2 ASSEMBLY WLDMT	2
40	0807635	PAD REAR OUTRIGGER PAD	2
41	0810584	ST1 ASSY WLDMT, LH 1.5 BOSS'15	1
42	0810585	ST1 ASSY WLDMT, RH 1.5 BOSS'15	1
43	0906963	PIN - REAR OUTRIGGER PAD ASSY	1
44	0912051	CENTURY SPADE KIT	1
45	GH246	SPLIT RUBBER GROMMET	4

0910411 REAR OUTRIGGER 4-STAGE ASSEMBLY

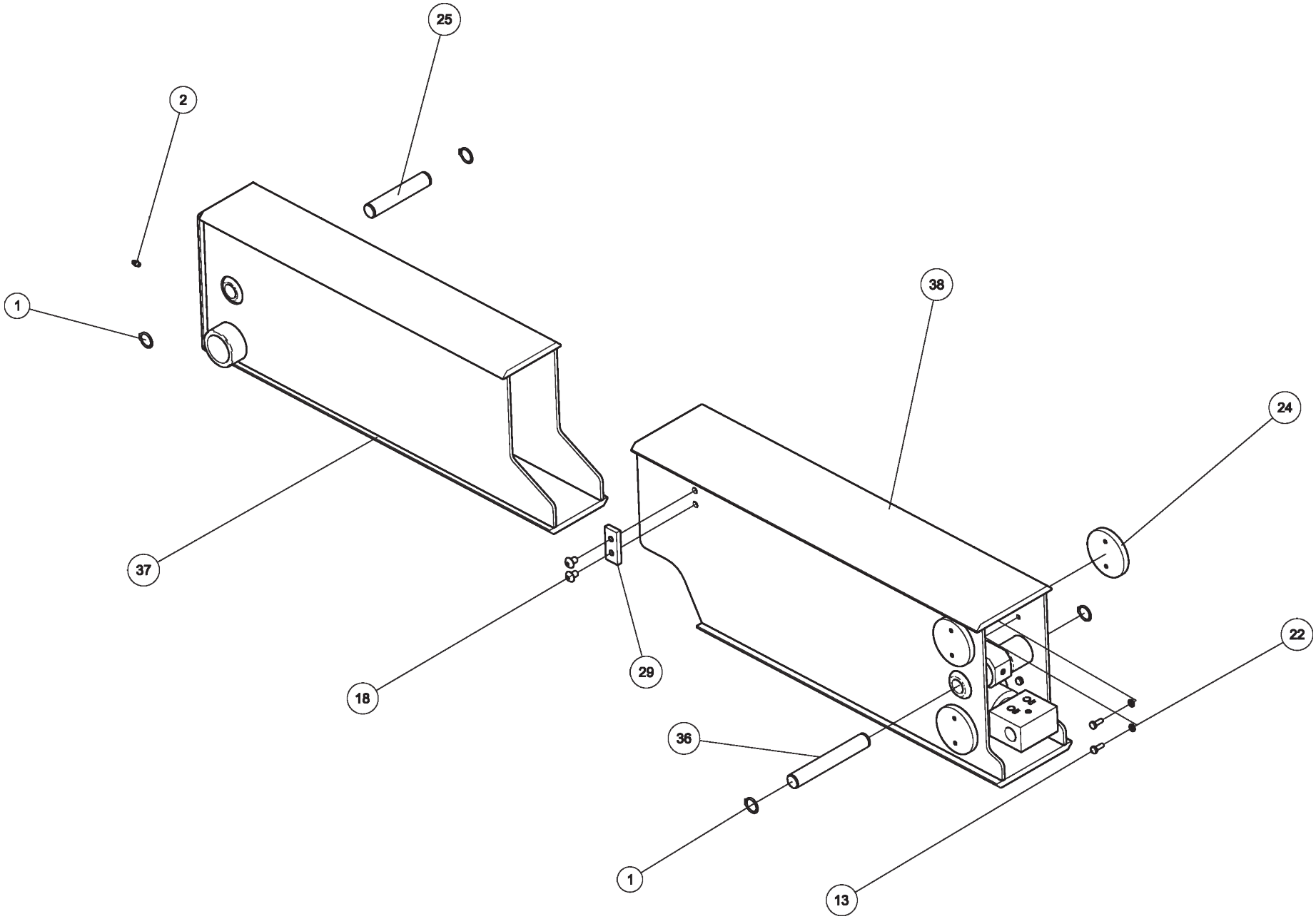

0910411 REAR OUTRIGGER 4-STAGE ASSEMBLY (cont'd)

ITEM	PART NUMBER	DESCRIPTION	QTY
	0910411	REAR OUTRIGGER 4 STAGE	
1	0300110	SNAP RING, 1" 5100-100	8
2	0300113	GREASE FITTING, 1/4-28 STR	2
3	0301422	FITTING, 6MJ-6MJ SMALL	4
4	0301522	ADAPTER, 6MJ-6MB	4
5	03015922	STAUFF CLAMP, 3/8 TWIN	4
6	03016101	TUBE, HYD ASSY REAR O/R RH EXT	1
7	03016102	TUBE, HYD ASSY REAR O/R RH RET	1
8	03016103	TUBE, HYD ASSY REAR O/R LH RET	1
9	03016104	TUBE, HYD ASSY REAR O/R LH EXT	1
10	0310289	FITTING-LONG ADAPTER 6MJ-8MBLL	4
11	0310707	CYLINDER, SPADE 4BOREx23STROKE	2
12	0312677	CYLINDER,TELESCOPING PIGGYBACK	2
13	0400066	SCREW, 1/4-20X3/4 HHC GR5	24
14	0400070	SCREW, 1/4-20X1 HHC GR5	2
15	0400122	SCREW, 3/8-16X1-1/4 HHC GR5	4
16	0400139	SET SCREW, 3/8-16X1-1/2 SOC	4
17	0400221	SET SCREW, 3/8-16X1 SOC	2
18	0400228	SCREW, 3/8-24X5/8 BSC	8
19	0400347	SCREW, 3/8-24X7/8 HHC GR5	8
20	0400392	NUT, 3/8-16 LOK	4
21	0400398	NUT, 3/8-16 LOK JAM	2
22	0400452	LKWASHER, 1/4	26
23	0400481	LKWASHER, 3/8 EXT	12
24	07000099	TEL BLOCK, STAGE 3	8
25	07000162	SHAFT, 1 DIA X 5-1/2 L	2
26	07000283	SHIM	2
27	07020904	PLATE, HARDLINE COVER RH	1
28	07020905	PLATE, HARDLINE COVER LH	1
29	0703231	PLATE, STOP OUTER BOOM	4
30	0707117	SHAFT, UPPER SPADE	2
31	0721901	PIN - OUTRIGGER TOP	2
32	0721902	PIN - OUTRIGGER BOTTOM	2
33	0722970	PAD,SPACER	4
34	0723889	PLATE-HOSE RETAINING	4
35	0725043	PLATE-COVER	2
36	0727421	SHAFT, 1 DIA X 7 L	2
37	0807311	STAGE 4 ASSEMBLY WLDMT	2
38	0807312	STAGE 3 ASSEMBLY WLDMT	2
39	0807313	STAGE 2 ASSEMBLY WLDMT	2
40	0807635	PAD REAR OUTRIGGER PAD	2
41	0810584	ST1 ASSY WLDMT, LH 1.5 BOSS'15	1
42	0810585	ST1 ASSY WLDMT, RH 1.5 BOSS'15	1
43	0906963	PIN - REAR OUTRIGGER PAD ASSY	1
44	0912051	CENTURY SPADE KIT	1
45	GH246	SPLIT RUBBER GROMMET	4

0910411 REAR OUTRIGGER 4-STAGE ASSEMBLY

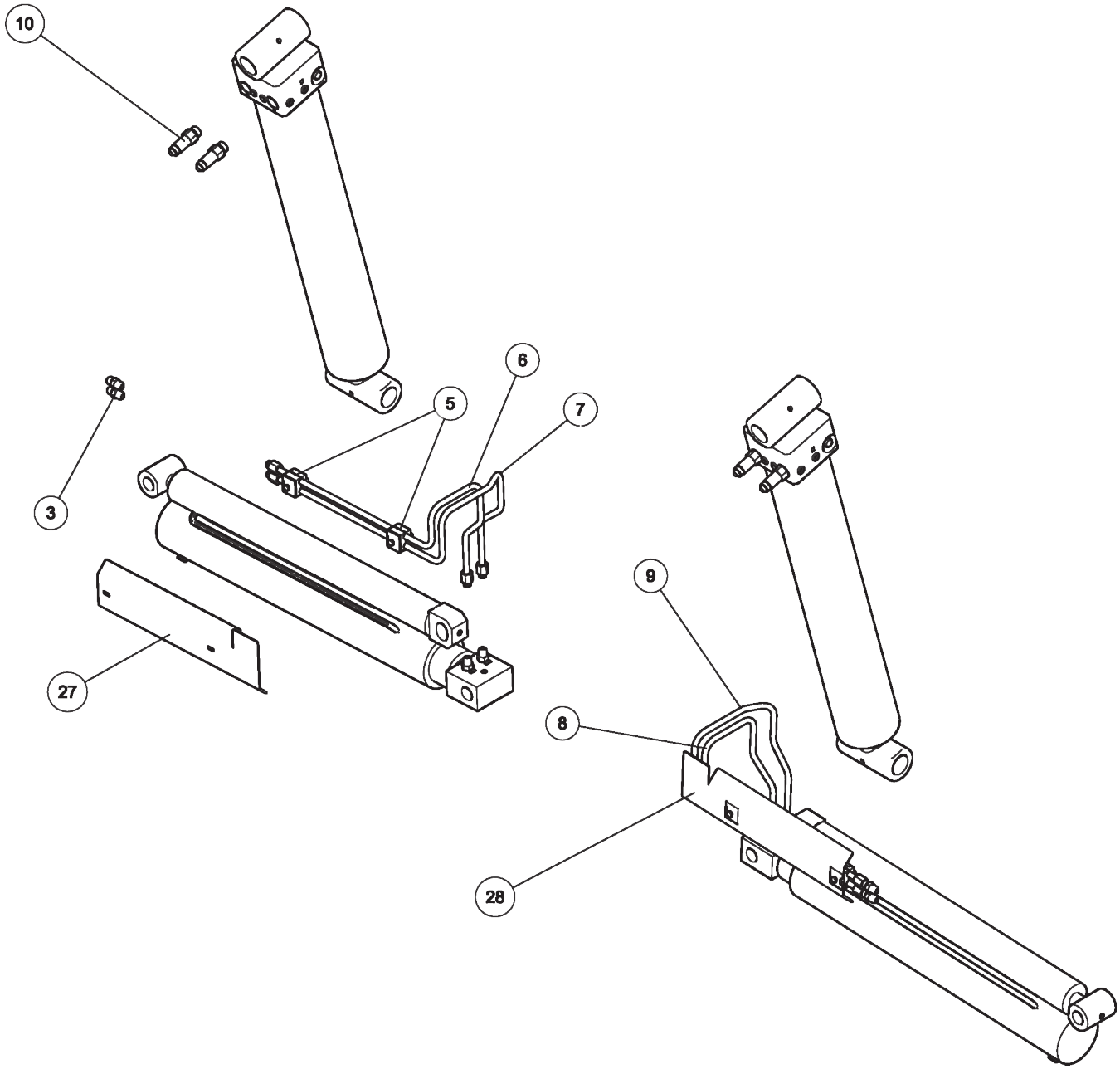

0910411 REAR OUTRIGGER 4-STAGE ASSEMBLY (cont'd)

ITEM	PART NUMBER	DESCRIPTION	QTY
	0910411	REAR OUTRIGGER 4 STAGE	
1	0300110	SNAP RING, 1" 5100-100	8
2	0300113	GREASE FITTING, 1/4-28 STR	2
3	0301422	FITTING, 6MJ-6MJ SMALL	4
4	0301522	ADAPTER, 6MJ-6MB	4
5	03015922	STAUFF CLAMP, 3/8 TWIN	4
6	03016101	TUBE, HYD ASSY REAR O/R RH EXT	1
7	03016102	TUBE, HYD ASSY REAR O/R RH RET	1
8	03016103	TUBE, HYD ASSY REAR O/R LH RET	1
9	03016104	TUBE, HYD ASSY REAR O/R LH EXT	1
10	0310289	FITTING-LONG ADAPTER 6MJ-8MBLL	4
11	0310707	CYLINDER, SPADE 4BOREx23STROKE	2
12	0312677	CYLINDER,TELESCOPING PIGGYBACK	2
13	0400066	SCREW, 1/4-20X3/4 HHC GR5	24
14	0400070	SCREW, 1/4-20X1 HHC GR5	2
15	0400122	SCREW, 3/8-16X1-1/4 HHC GR5	4
16	0400139	SET SCREW, 3/8-16X1-1/2 SOC	4
17	0400221	SET SCREW, 3/8-16X1 SOC	2
18	0400228	SCREW, 3/8-24X5/8 BSC	8
19	0400347	SCREW, 3/8-24X7/8 HHC GR5	8
20	0400392	NUT, 3/8-16 LOK	4
21	0400398	NUT, 3/8-16 LOK JAM	2
22	0400452	LKWASHER, 1/4	26
23	0400481	LKWASHER, 3/8 EXT	12
24	07000099	TEL BLOCK, STAGE 3	8
25	07000162	SHAFT, 1 DIA X 5-1/2 L	2
26	07000283	SHIM	2
27	07020904	PLATE, HARDLINE COVER RH	1
28	07020905	PLATE, HARDLINE COVER LH	1
29	0703231	PLATE, STOP OUTER BOOM	4
30	0707117	SHAFT, UPPER SPADE	2
31	0721901	PIN - OUTRIGGER TOP	2
32	0721902	PIN - OUTRIGGER BOTTOM	2
33	0722970	PAD,SPACER	4
34	0723889	PLATE-HOSE RETAINING	4
35	0725043	PLATE-COVER	2
36	0727421	SHAFT, 1 DIA X 7 L	2
37	0807311	STAGE 4 ASSEMBLY WLDMT	2
38	0807312	STAGE 3 ASSEMBLY WLDMT	2
39	0807313	STAGE 2 ASSEMBLY WLDMT	2
40	0807635	PAD REAR OUTRIGGER PAD	2
41	0810584	ST1 ASSY WLDMT, LH 1.5 BOSS'15	1
42	0810585	ST1 ASSY WLDMT, RH 1.5 BOSS'15	1
43	0906963	PIN - REAR OUTRIGGER PAD ASSY	1
44	0912051	CENTURY SPADE KIT	1
45	GH246	SPLIT RUBBER GROMMET	4

0910411 REAR OUTRIGGER 4-STAGE ASSEMBLY

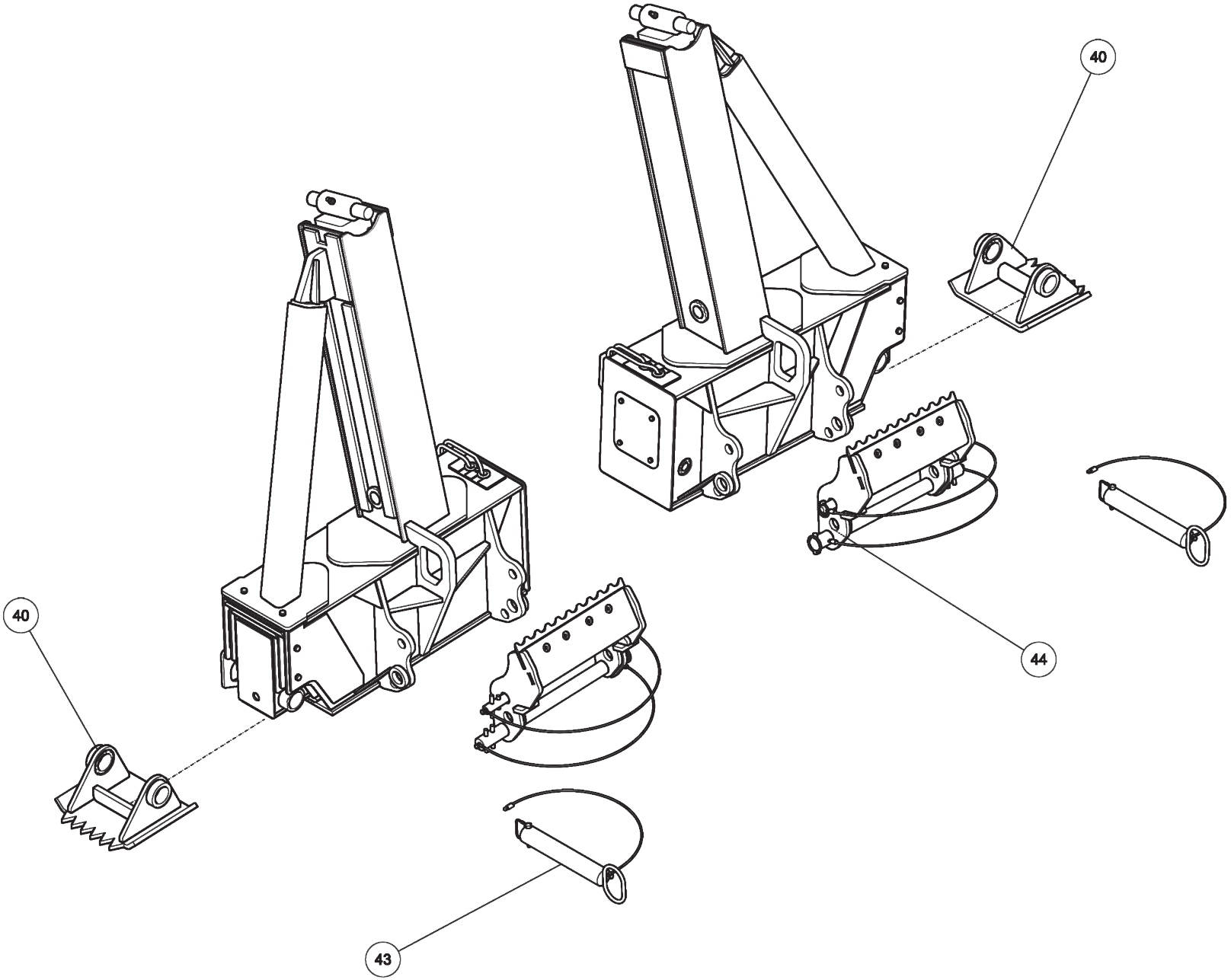

0910411 REAR OUTRIGGER 4-STAGE ASSEMBLY (cont'd)

ITEM	PART NUMBER	DESCRIPTION	QTY
	0910411	REAR OUTRIGGER 4 STAGE	
1	0300110	SNAP RING, 1" 5100-100	8
2	0300113	GREASE FITTING, 1/4-28 STR	2
3	0301422	FITTING, 6MJ-6MJ SMALL	4
4	0301522	ADAPTER, 6MJ-6MB	4
5	03015922	STAUFF CLAMP, 3/8 TWIN	4
6	03016101	TUBE, HYD ASSY REAR O/R RH EXT	1
7	03016102	TUBE, HYD ASSY REAR O/R RH RET	1
8	03016103	TUBE, HYD ASSY REAR O/R LH RET	1
9	03016104	TUBE, HYD ASSY REAR O/R LH EXT	1
10	0310289	FITTING-LONG ADAPTER 6MJ-8MBLL	4
11	0310707	CYLINDER, SPADE 4BOREx23STROKE	2
12	0312677	CYLINDER,TELESCOPING PIGGYBACK	2
13	0400066	SCREW, 1/4-20X3/4 HHC GR5	24
14	0400070	SCREW, 1/4-20X1 HHC GR5	2
15	0400122	SCREW, 3/8-16X1-1/4 HHC GR5	4
16	0400139	SET SCREW, 3/8-16X1-1/2 SOC	4
17	0400221	SET SCREW, 3/8-16X1 SOC	2
18	0400228	SCREW, 3/8-24X5/8 BSC	8
19	0400347	SCREW, 3/8-24X7/8 HHC GR5	8
20	0400392	NUT, 3/8-16 LOK	4
21	0400398	NUT, 3/8-16 LOK JAM	2
22	0400452	LKWASHER, 1/4	26
23	0400481	LKWASHER, 3/8 EXT	12
24	07000099	TEL BLOCK, STAGE 3	8
25	07000162	SHAFT, 1 DIA X 5-1/2 L	2
26	07000283	SHIM	2
27	07020904	PLATE, HARDLINE COVER RH	1
28	07020905	PLATE, HARDLINE COVER LH	1
29	0703231	PLATE, STOP OUTER BOOM	4
30	0707117	SHAFT, UPPER SPADE	2
31	0721901	PIN - OUTRIGGER TOP	2
32	0721902	PIN - OUTRIGGER BOTTOM	2
33	0722970	PAD,SPACER	4
34	0723889	PLATE-HOSE RETAINING	4
35	0725043	PLATE-COVER	2
36	0727421	SHAFT, 1 DIA X 7 L	2
37	0807311	STAGE 4 ASSEMBLY WLDMT	2
38	0807312	STAGE 3 ASSEMBLY WLDMT	2
39	0807313	STAGE 2 ASSEMBLY WLDMT	2
40	0807635	PAD REAR OUTRIGGER PAD	2
41	0810584	ST1 ASSY WLDMT, LH 1.5 BOSS'15	1
42	0810585	ST1 ASSY WLDMT, RH 1.5 BOSS'15	1
43	0906963	PIN - REAR OUTRIGGER PAD ASSY	1
44	0912051	CENTURY SPADE KIT	1
45	GH246	SPLIT RUBBER GROMMET	4

0906963 PIN REAR OUTRIGGER PAD ASSEMBLY

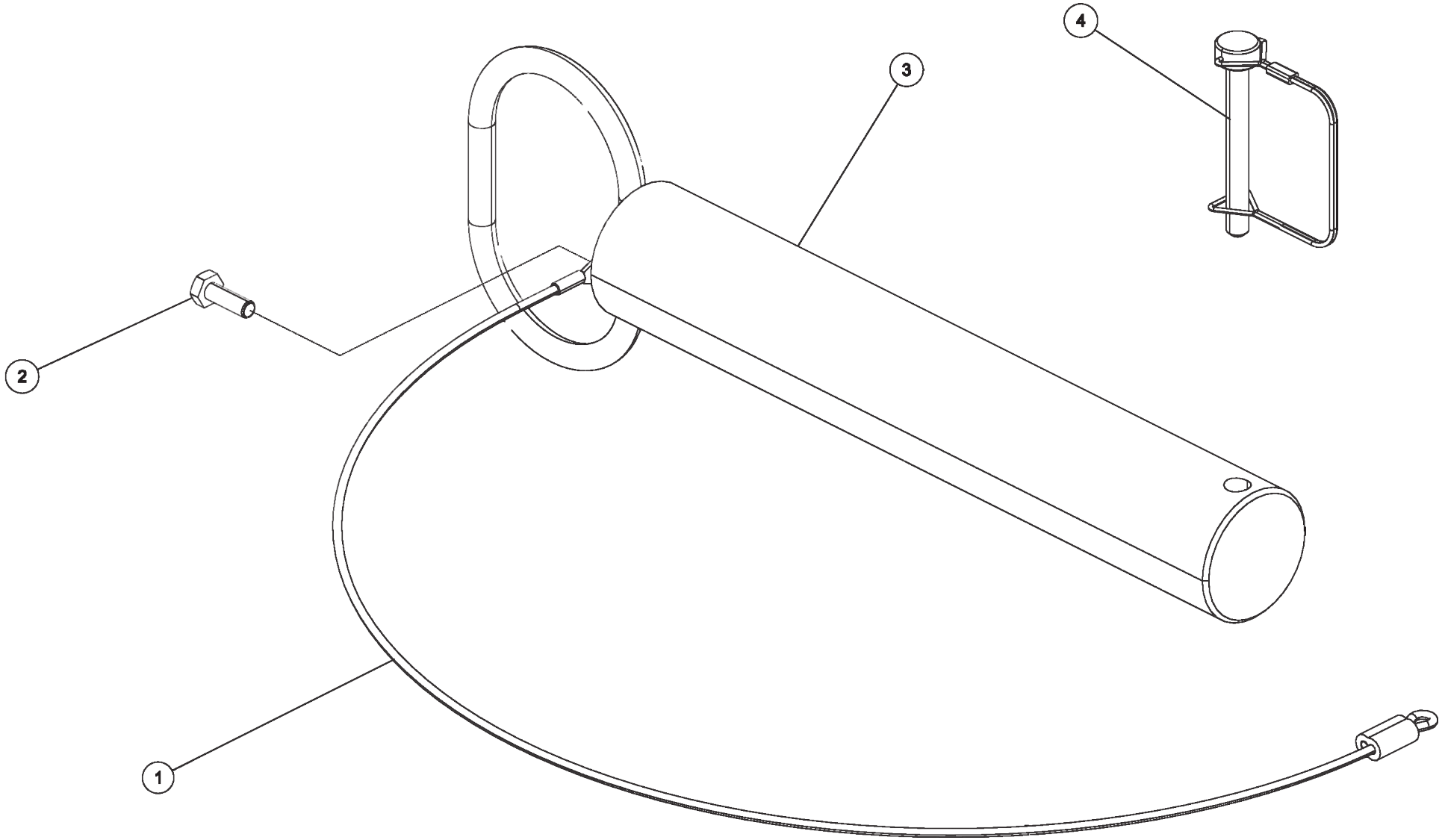

0906963 PIN REAR OUTRIGGER PAD ASSEMBLY (cont'd)

ITEM	PART NUMBER	DESCRIPTION	QTY
	0906963	PIN REAR OUTRIGGER PAD ASSEMBLY	
1	0311210	CABLE, PIN RETAINER ASSY .125	1
2	0402020	SCREW, 1/4-20X3/4 HHC SS	1
3	0805893	PIN WLDT REAR OUTRIGGER PAD	1
4	HD1259	SAFETY SNAP PIN	1

0912051 CENTURY SPADE KIT

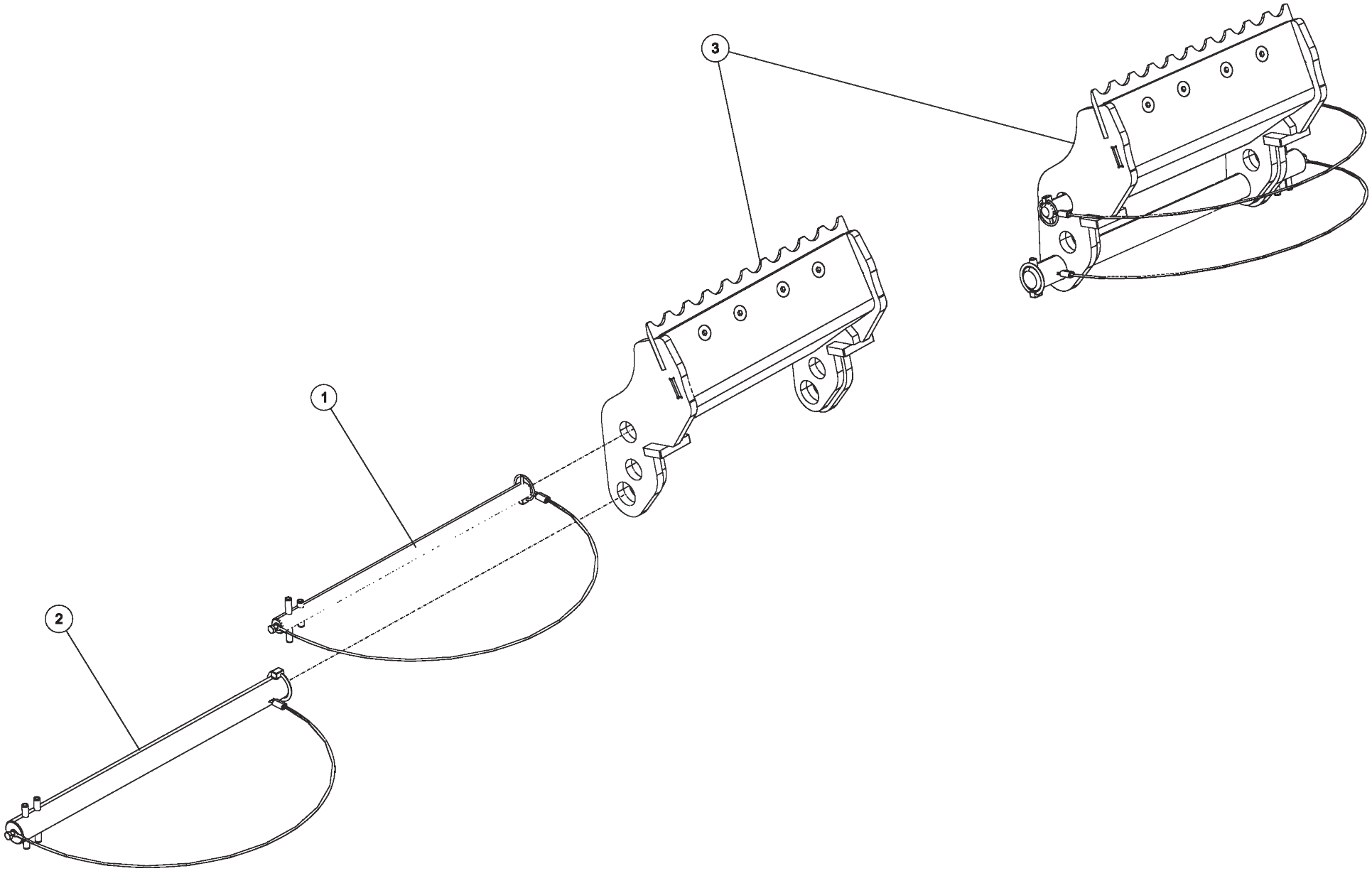

0912051 CENTURY SPADE KIT (cont'd)

ITEM	PART NUMBER	DESCRIPTION	QTY
	0912051	CENTURY SPADE KIT	
1	0911123	PIN ASSY - SPADE LOCK	2
2	0911124	PIN ASSY - SPADE PIVOT	2
3	0911167	SPADE ASSY - REAR OUTRIGGER	2

0911123 PIN ASSEMBLY SPADE LOCK

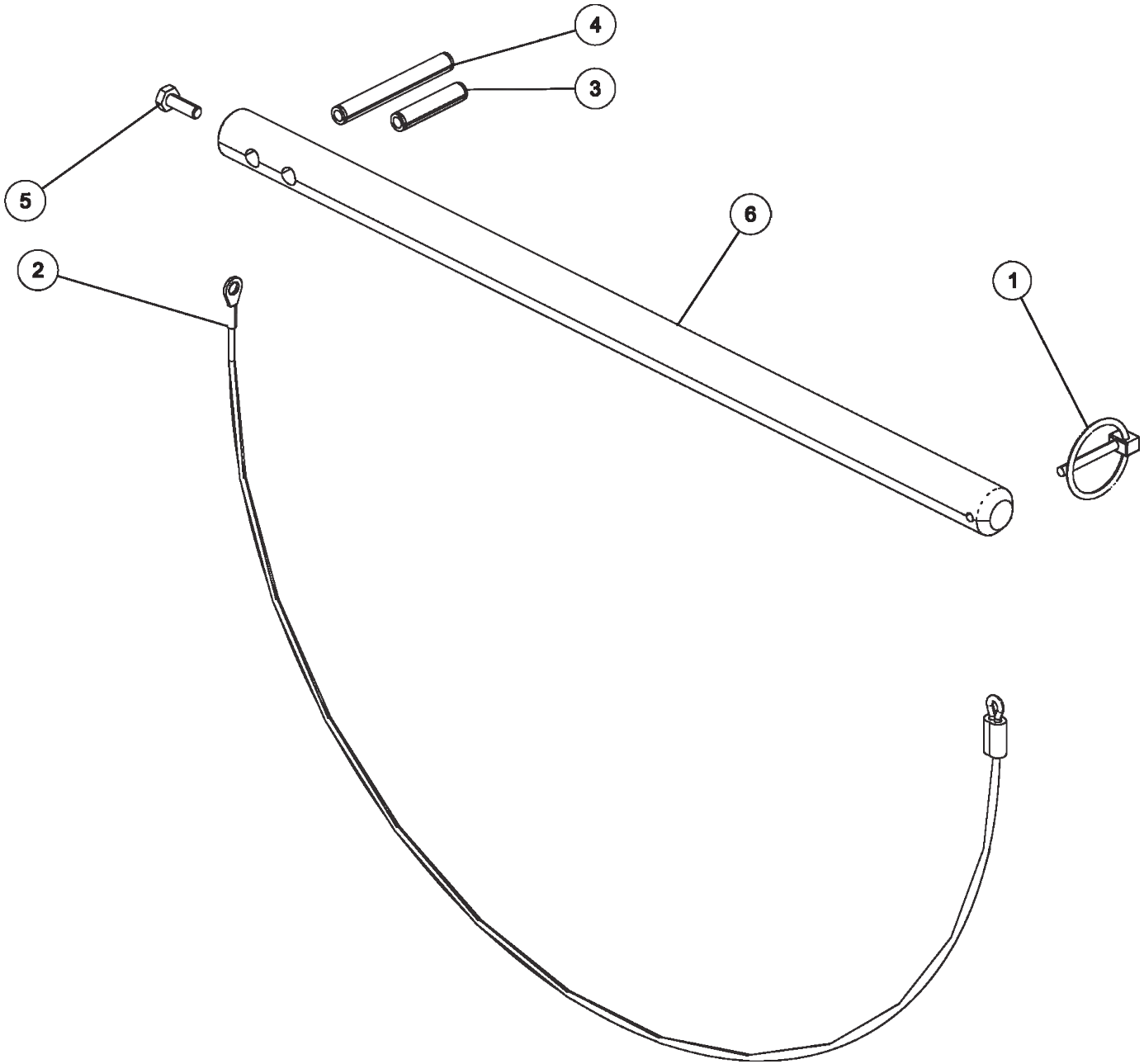

0911123 PIN ASSEMBLY SPADE LOCK (cont'd)

ITEM	PART NUMBER	DESCRIPTION	QTY
	0911123	PIN ASSEMBLY SPADE LOCK	
1	0302474	PIN, LINCH 3/16	1
2	0311210	CABLE, PIN RETAINER ASSY .125	1
3	0400564	PIN, 3/8X1-3/4 SPR	1
4	0400568	PIN, 3/8X3 SPR	1
5	0402020	SCREW, 1/4-20X3/4 HHC SS	1
6	0724633	PIN LOCK SPADE	1

0911124 PIN ASSEMBLY SPADE PIVOT

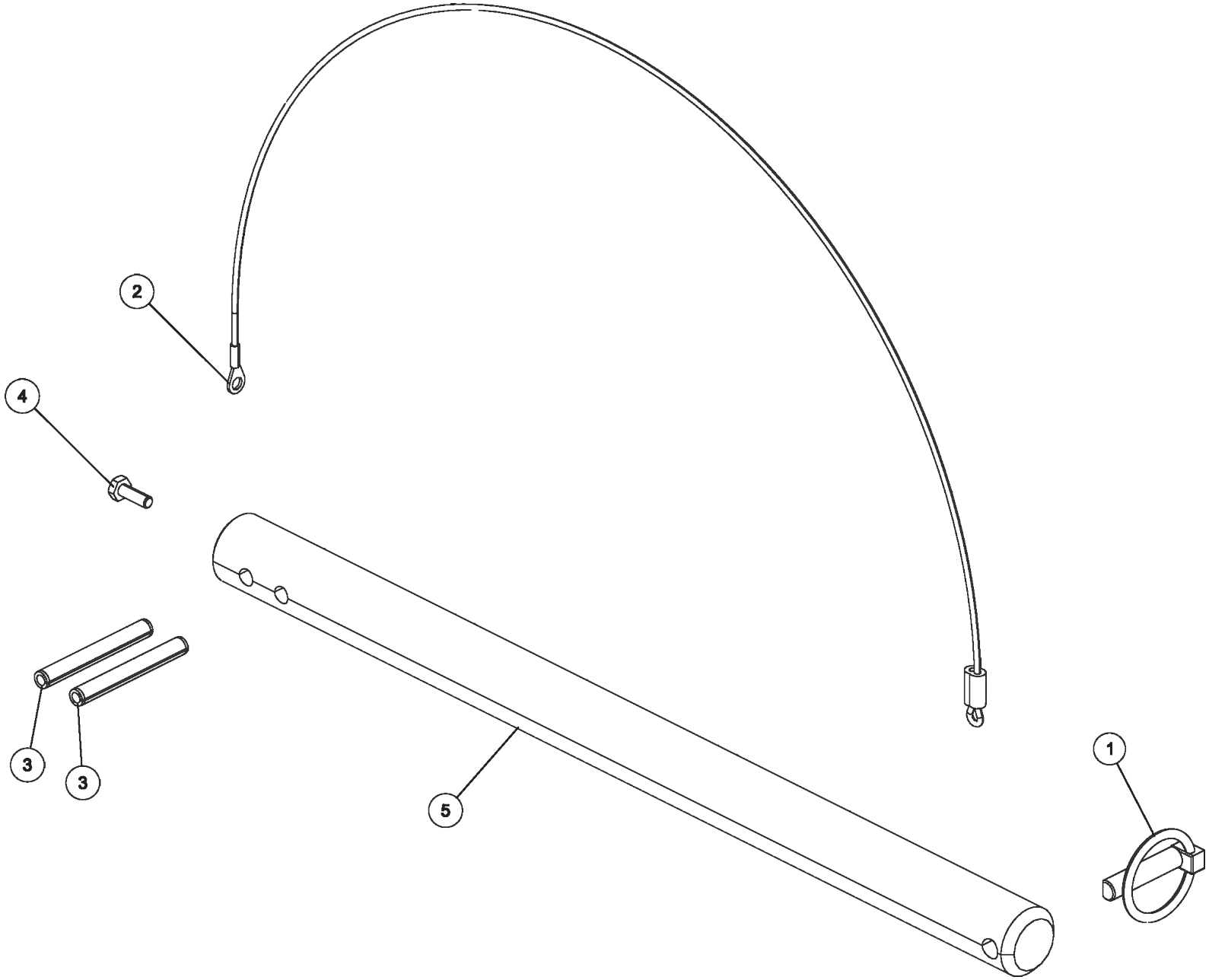

0911124 PIN ASSEMBLY SPADE PIVOT (cont'd)

ITEM	PART NUMBER	DESCRIPTION	QTY
	0911124	PIN ASSEMBLY SPADE PIVOT	
1	0301861	QUICK PIN,LINCH -B7932 PL 7/16	1
2	0311210	CABLE, PIN RETAINER ASSY .125	1
3	0400568	PIN, 3/8X3 SPR	3
4	0402020	SCREW, 1/4-20X3/4 HHC SS	1
5	0724634	PIN PIVOT SPADE	1

0911167 SPADE ASSEMBLY REAR OUTRIGGER

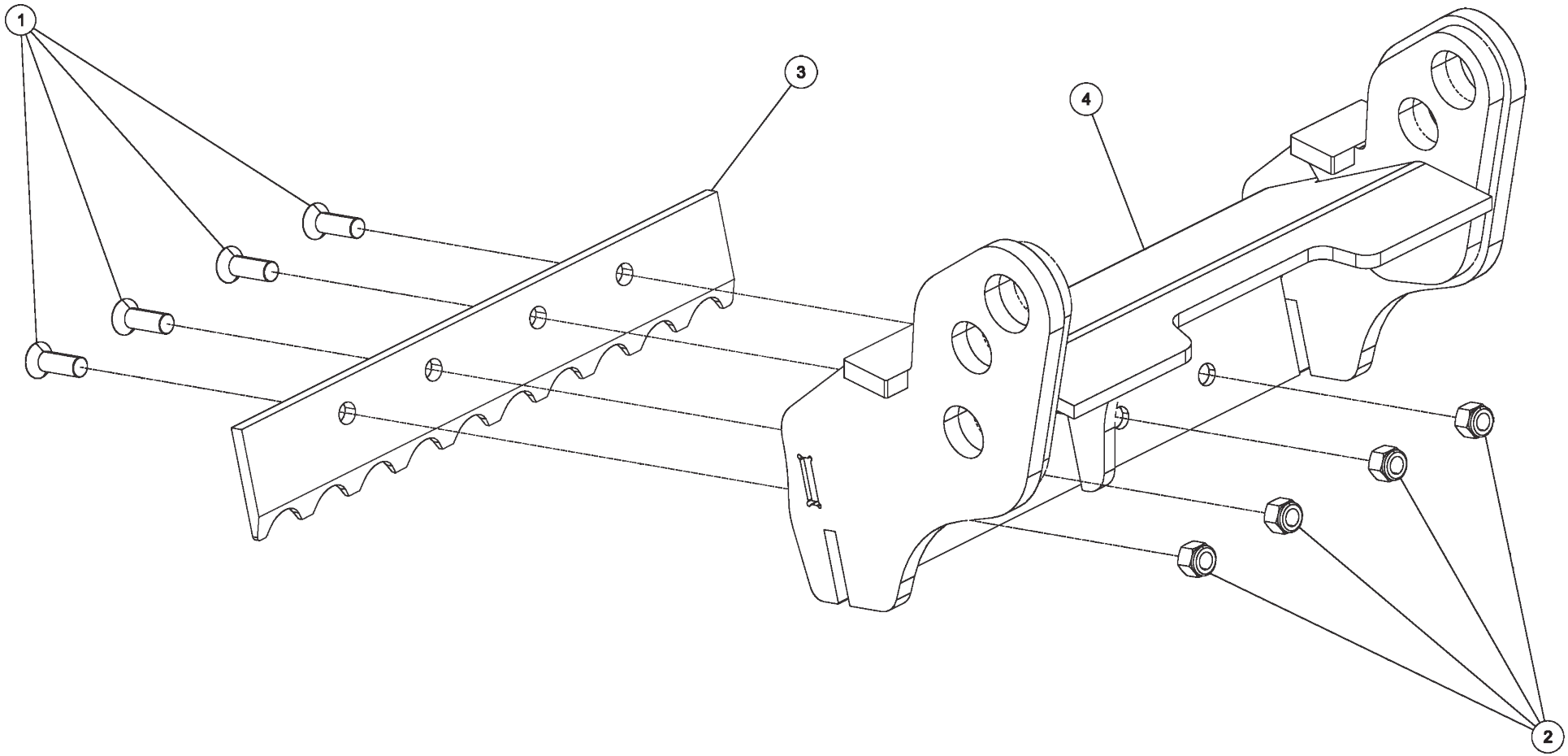

0911167 SPADE ASSEMBLY REAR OUTRIGGER (cont'd)

ITEM	PART NUMBER	DESCRIPTION	QTY
	0911167	SPADE ASSEMBLY REAR OUTRIGGER	
1	0400193	SCREW, 1/2-13X1-1/2 FHS	4
2	0400416	NUT, 1/2-13 LOK GR8	4
3	0724616	PLATE BLADE SPADE	1
4	0810034	SPADE - REAR OUTRIGGERS	1

0910838 BUA '10 ROTATOR ALUM BODY

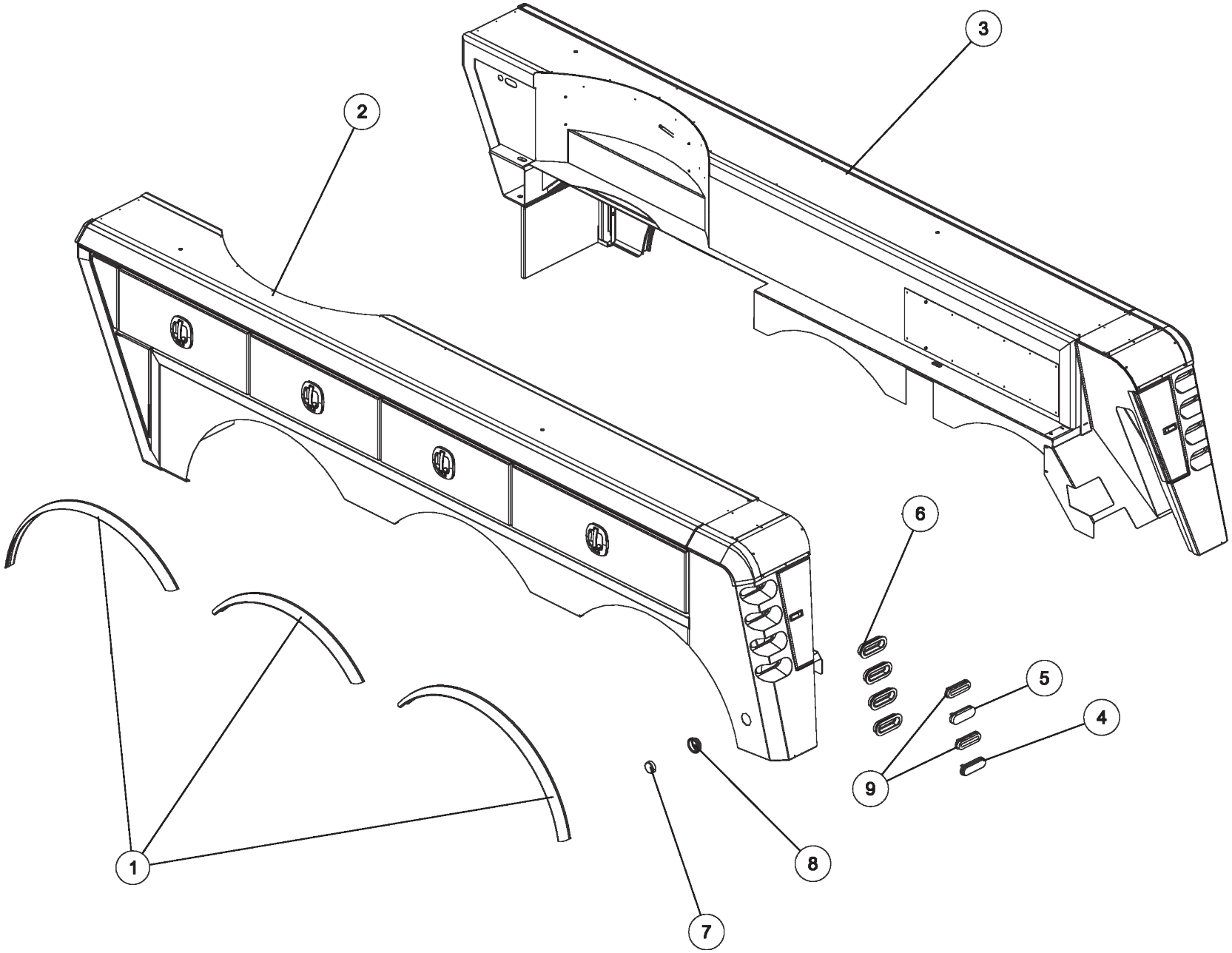

0910838 BUA '10 ROTATOR ALUM BODY (cont'd)

ITEM	PART NUMBER	DESCRIPTION	QTY
	0910838	BASIC UNIT ASSY ROTATOR ALUM BODY	
1	0307151	RUBBER FENDER	35
2	0311027	AL BODY '10 ROT W/ XP TRI LH	1
3	0311028	AL BODY '10 ROT W/ XP TRI RH	1
4	0311500	LIGHT 6"OVAL REVERSE LED	2
5	0311502	LIGHT 6"OVAL CLEAR-AMBER LED	4
6	0311503	GROMMET, LIGHT 6" OVAL	10
7	0311514	2.5"LED RED MRKRLITE-CLR12/24V	2
8	0311516	GROMMET, LIGHT 2.5" ROUND	2
9	0312309	LIGHT 6" OVAL GLO-LT STT CLR/R	4

0910935 CROSSBAR ASSEMBLY 5X5 CENTURY

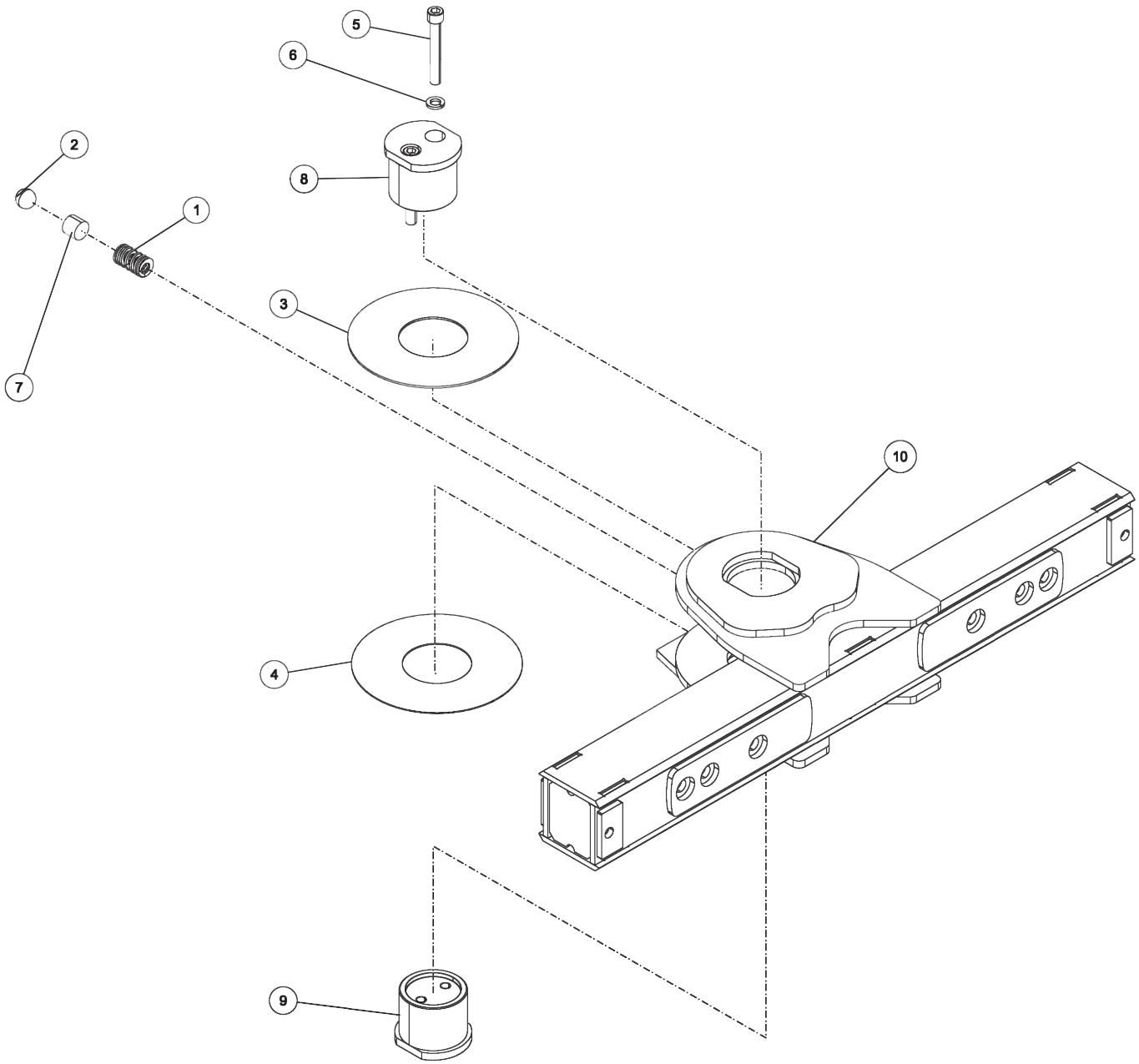

0910935 CROSSBAR ASSEMBLY 5X5 CENTURY (cont'd)

ITEM	PART NUMBER	DESCRIPTION	QTY
	0910935	CROSSBAR ASSEMBLY 5x5	
1	0301197	COMP.SPRING,CROSS BAR,FI	1
2	0301398	STEEL BALL, 1-3/16 DIA	1
3	0303097	THRUST WASHER - 1/8 THK	1
4	0303098	THRUST WASHER - 1/16 THK	1
5	0400271	SCREW, 5/8-11X4-1/2 HHC	2
6	0400508	LKWASHER, 5/8	2
7	07011109	SPACER, DETENT BALL SPRING	1
8	0724980	PIN-TOP HALF PIVOT	1
9	0724981	PIN-BOTTOM HALF PIVOT	1
10	0807124	CROSSBAR WELDMENT 25K, CENTURY	1

0911237 ILLUMINATED LEGEND ASSEMBLY RH LOWER

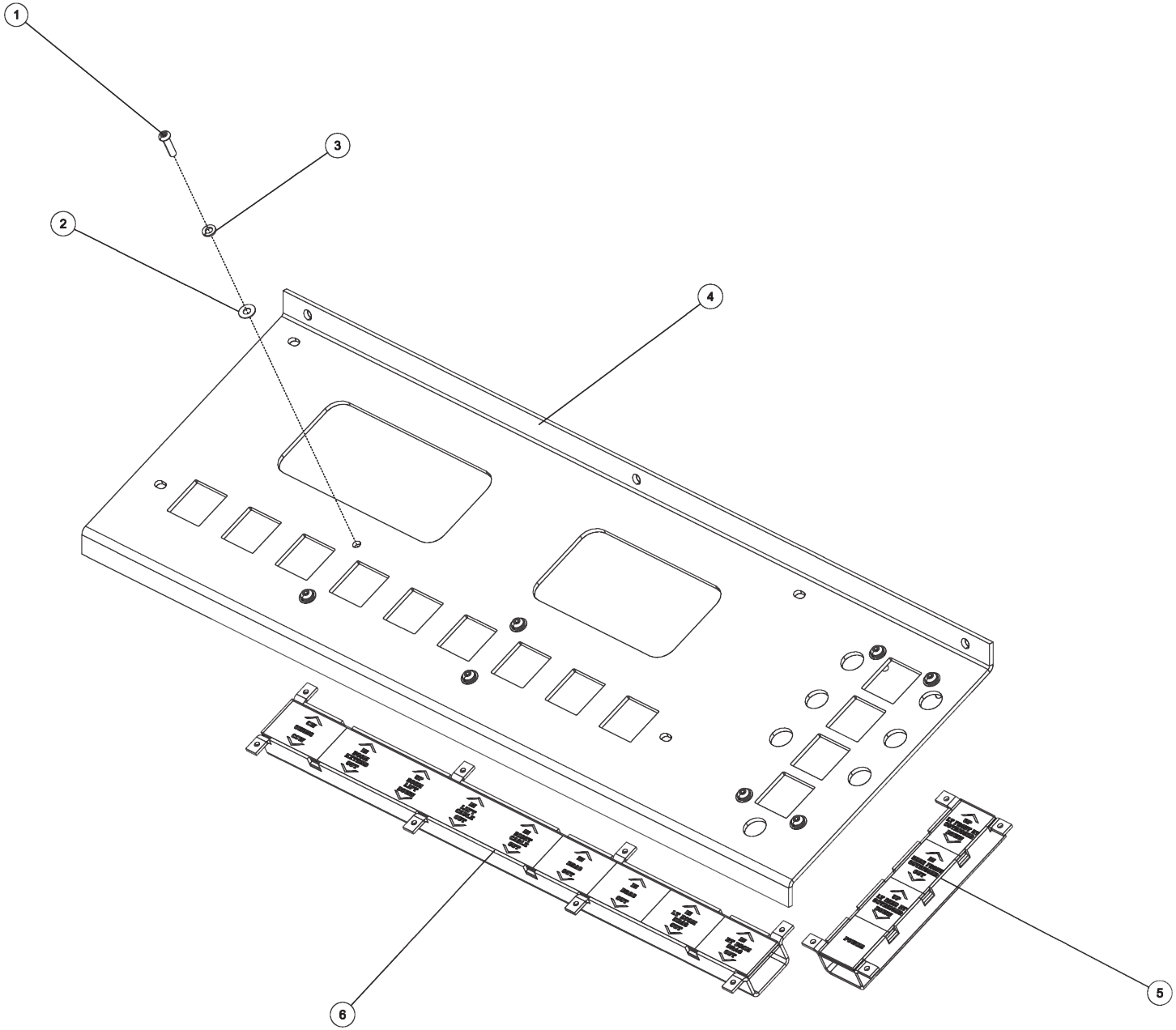

0911237 ILLUMINATED LEGEND ASSEMBLY RH LOWER (cont'd)

ITEM	PART NUMBER	DESCRIPTION	QTY
	0911237	ILLUMINATED LEGEND ASSEMBLY RH LOWER	
1	04000381	SS BHSCS 1/4-20 X 1	8
2	0400454	WASHER, 1/4 SS	8
3	0402111	LKWASHER, 1/4 SS	8
4	0727011	APANEL, CONTROL	1
5	09000120	ILLUMINATED LEGEND ASSY	1
6	09000142	ILLUMINATED LEGEND ASSY 24.75	1

09000120 ILLUMINATED LEGEND ASSEMBLY

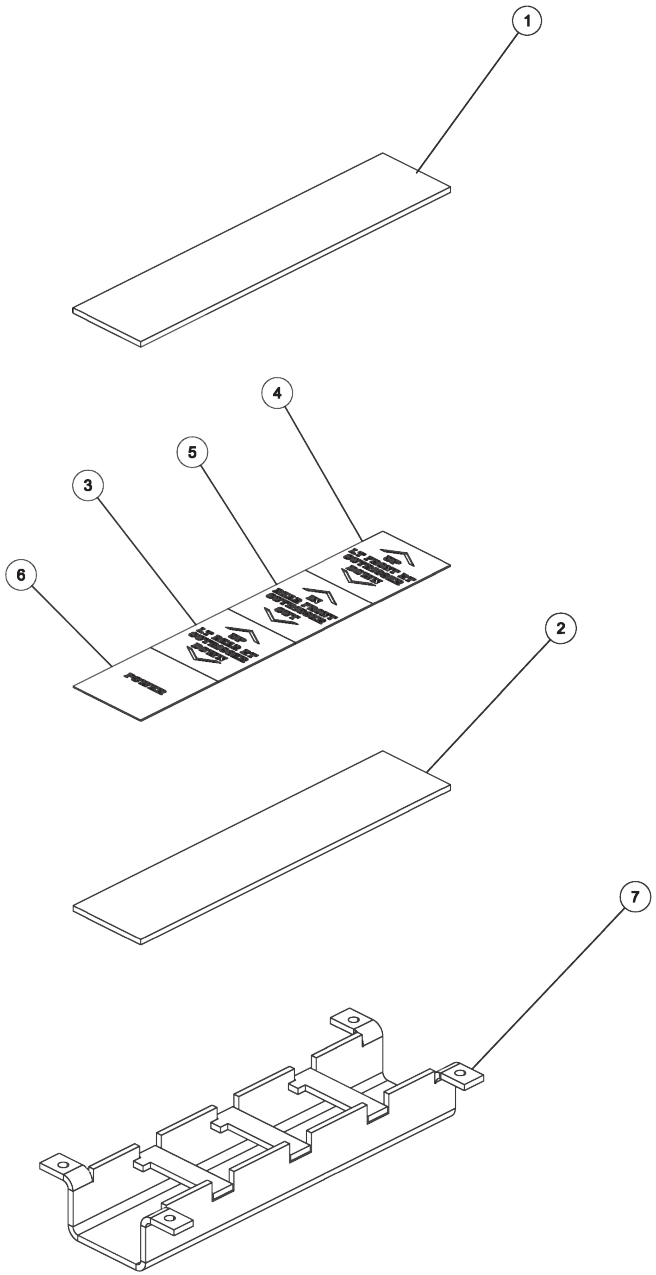

09000120 ILLUMINATED LEGEND ASSEMBLY (cont'd)

ITEM	PART NUMBER	DESCRIPTION	QTY
	09000120	ILLUMINATED LEGEND ASSEMBLY	
1	0310093	PLASTIC, DUST COVER-CLEAR 8	1
2	0310095	PLASTIC, COLOR LENS -RED 8	1
3	0501579	LEGEND, PANEL-REAR OUTRIGGER	1
4	0501580	LEGEND, PANEL-FRONT OUTRIGGER	1
5	0501618	LEGEND,PANEL- REAR/ FRT OUTRIG	1
6	0501620	LEGEND,PANEL- POWER	1
7	0807114	CHANNEL,LIGHT&LEGEND WLMT 8	1

09000142 ILLUMINATED LEGEND ASSEMBLY 24.75

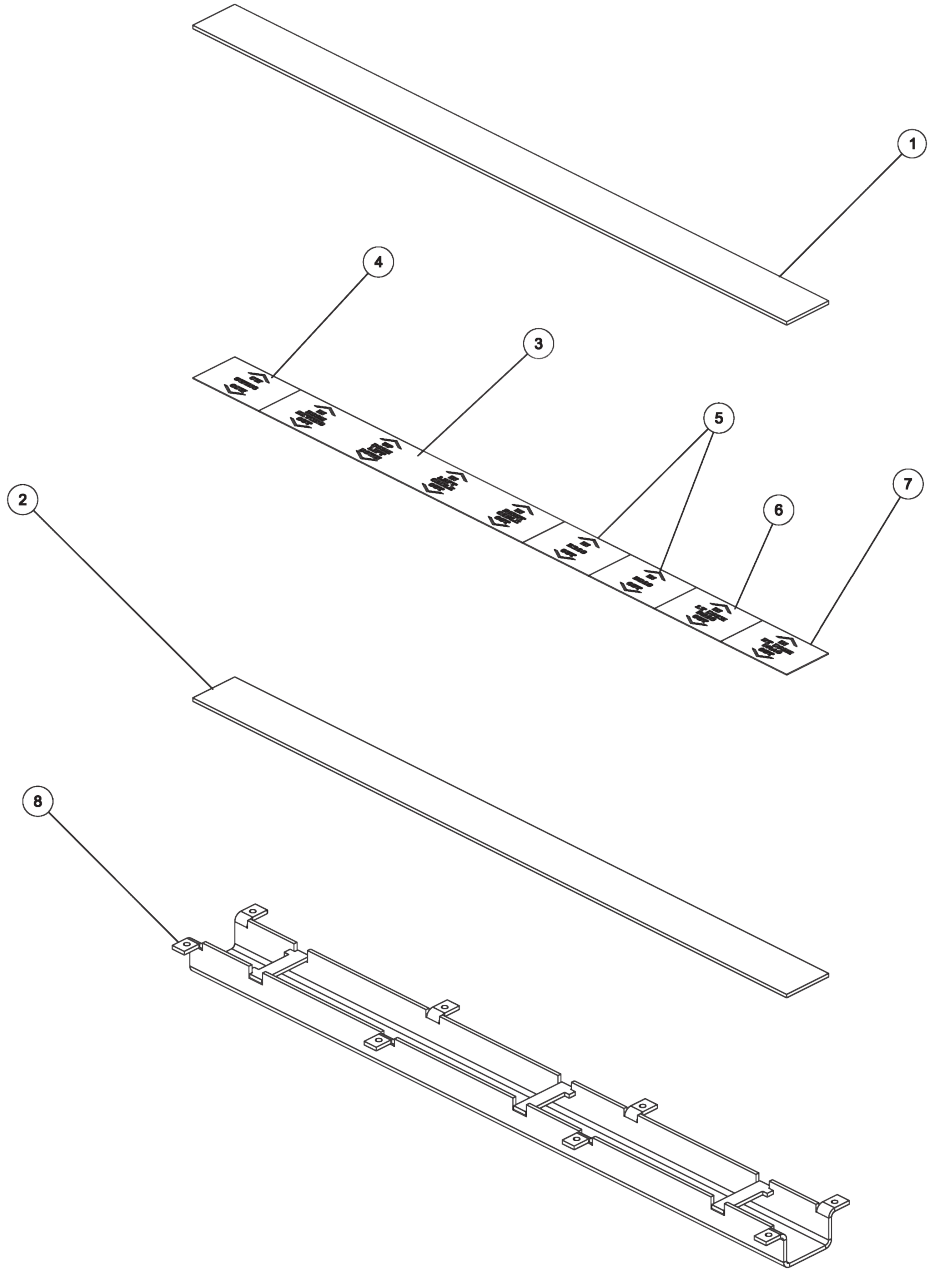

09000142 ILLUMINATED LEGEND ASSEMBLY 24.75 (cont'd)

ITEM	PART NUMBER	DESCRIPTION	QTY
	09000142	ILLUMINATED LEGEND ASSEMBLY	
1	0310002	PLASTIC, DUST COVER-CLEAR 24.7	1
2	0310003	PLASTIC, COLOR LENS -RED 24.75	1
3	0310040	FLEXLITE LED STRIP	1
4	0310041	FLEXLITE LED POWER WIRE	1
5	0310042	FLEXLITE LED JUMPER WIRE	1
6	0310184	JUMPER WIRE, 15 FLEXLIGHT	1
7	0501584	LEGEND, PANEL-BOOM/CABLE	1
8	0501585	LEGEND, PANEL-SWING	1
9	0501586	LEGEND, PANEL-DRAG	2
10	0501621	LEGEND,PANEL- LT BOOM DRAG	1
11	0501622	LEGEND,PANEL- RT BOOM DRAG	1
12	0807056	CHANNEL,LIGHT&LEGEND WLMT 24.7	1

0911324 RH CONTROL STATION ASSEMBLY 5 WINCH

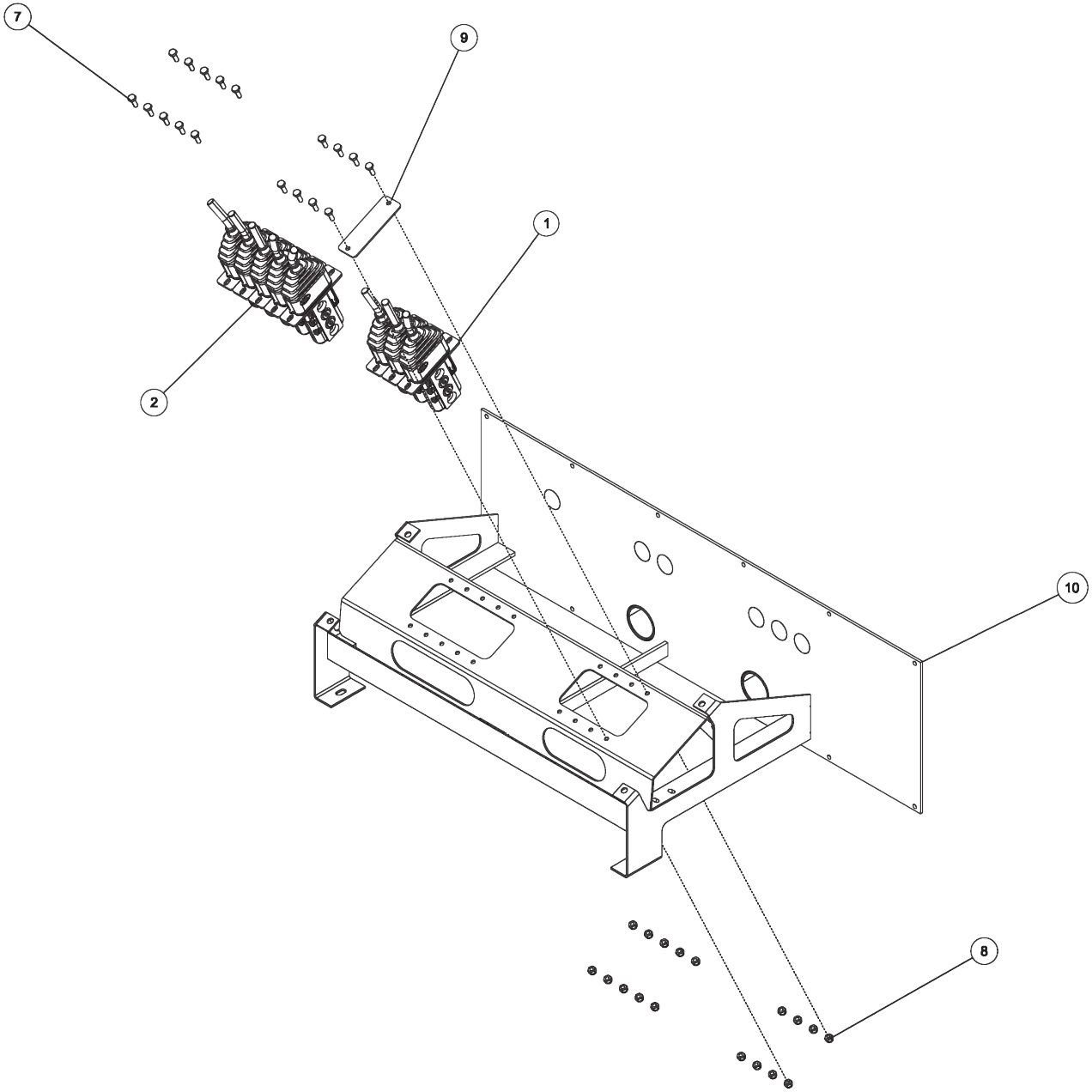

0911324 RH CONTROL STATION ASSEMBLY 5 WINCH (cont'd)

ITEM	PART NUMBER	DESCRIPTION	QTY
	0911324	RH CONTROL STATION 5 WINCH	
1	03016755	VLV-3 SPL PILOT W/THREADED HDL	1
2	03016757	VLV-5 SPL PILOT W/THREADED HDL	1
3	0301781	FITTING, SWV NUT RUN TEE	2
4	0301998	HOSE HYD, 24" LG	2
5	0302695	ADAPTER, 6MJ-4MB	2
6	0311427	FITTING, 4MJ-4MB 45	16
7	0400066	SCREW, 1/4-20X3/4 HHC GR5	18
8	0400367	NUT, 1/4-20 LOK	18
9	0724777	PLATE-JOYSTICK COVER	1
10	0810056	CNTRL FRAME WLDMT-RT PILOT VLV	1
11	IC209	FTG-90DEG ADPTR 1/4 ORB	2

0911324 RH CONTROL STATION ASSEMBLY 5 WINCH (cont'd)

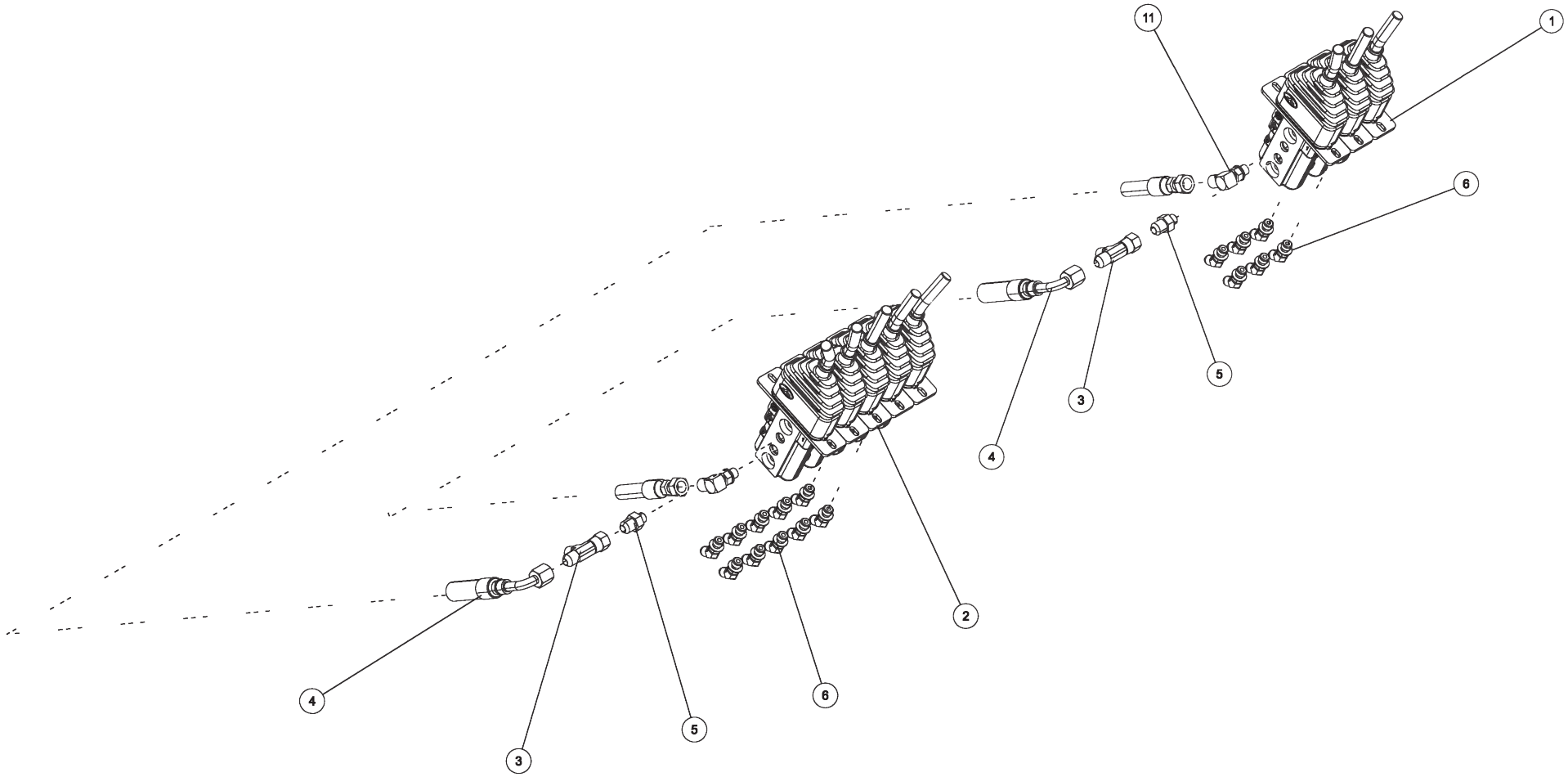

0911324 RH CONTROL STATION ASSEMBLY 5 WINCH (cont'd)

ITEM	PART NUMBER	DESCRIPTION	QTY
	0911324	RH CONTROL STATION 5 WINCH	
1	03016755	VLV-3 SPL PILOT W/THREADED HDL	1
2	03016757	VLV-5 SPL PILOT W/THREADED HDL	1
3	0301781	FITTING, SWV NUT RUN TEE	2
4	0301998	HOSE HYD, 24" LG	2
5	0302695	ADAPTER, 6MJ-4MB	2
6	0311427	FITTING, 4MJ-4MB 45	16
7	0400066	SCREW, 1/4-20X3/4 HHC GR5	18
8	0400367	NUT, 1/4-20 LOK	18
9	0724777	PLATE-JOYSTICK COVER	1
10	0810056	CNTRL FRAME WLDMT-RT PILOT VLV	1
11	IC209	FTG-90DEG ADPTR 1/4 ORB	2

0911804 AIR REGULATOR ASSEMBLY

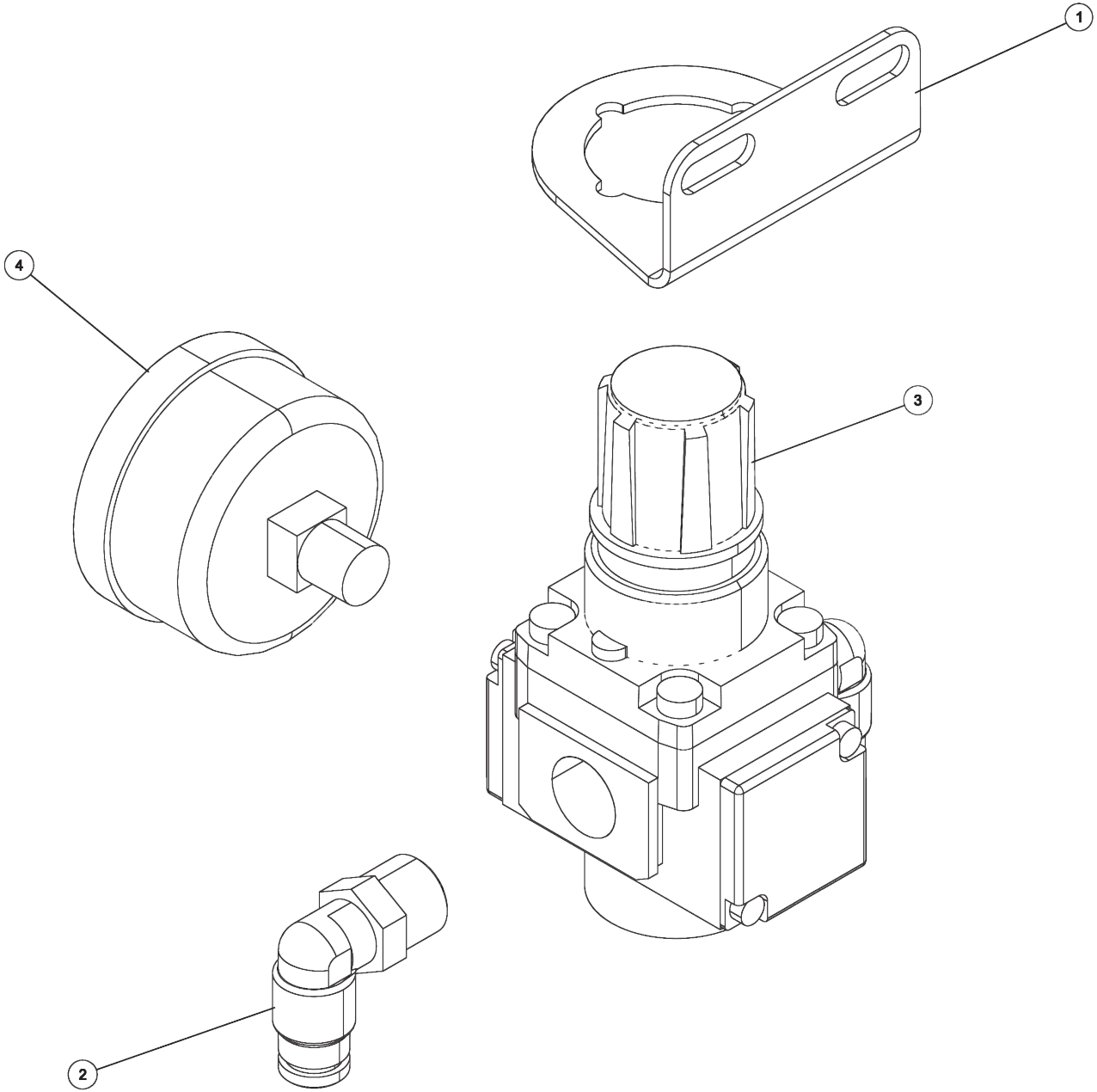

0911804 AIR REGULATOR ASSEMBLY (cont'd)

ITEM	PART NUMBER	DESCRIPTION	QTY
	0911804	AIR REGULATOR GAUGE ASSEMBLY	
1	0303365	BRACKET, MOUNTING - AIR PREP	1
2	9010520	FITTING-ELBOW 1/4T-1/4NPT	2
3	HA0131	REGULATOR , AIR	1
4	HA0132	GAUGE 0-160 PSI	1

NOTES

NOTES

CENTURY®

Miller Industries Towing Equipment Inc.
8503 Hilltop Drive • Ooltewah, Tennessee 37363
(423) 238-4171 • www.millerind.com