OWNER'S MANUAL

V-70 2-WINCH

STD JACK LEG, JACK LEG FLIPPER FEET & REAR OUTRIGGER MODELS

PARTS

NOTE: MANUAL including SPECIFICATIONS subject to change without notice.
All ratings specified are based on structural factors only, not vehicle capacities or capabilities.

Miller Industries Towing Equipment Inc.
8503 Hilltop Drive
Ooltewah, Tennessee 37363
Phone (423) 238-4171 • FAX (423) 238-5371

FORM NO. 05004926
03 / 2023
Price $25.00

LIMITED WARRANTY

MILLER INDUSTRIES TOWING EQUIPMENT INC., hereinafter referred to as MILLER, warrants to the original purchaser that each new MILLER wrecker or other MILLER products will be free from defects in material and workmanship for a period of twelve (12) months from date placed in service, but in no event shall such warranty period exceed twenty-four (24) months from date of manufacture by MILLER. The purchaser must promptly notify MILLER in writing of any failure in material or workmanship. In no event shall MILLER accept such notification later than twenty-four (24) months from date of delivery or twelve (12) months from date placed in service, whichever is earlier.

MILLER's obligation under this warranty, statutory or otherwise, is limited to the repair or replacement at the MILLER factory, or at a point designated by MILLER, of such part or parts as shall appear upon inspection by MILLER to be defective in material or workmanship. New or remanufactured parts will be used for any replacement at MILLER's option. This warranty is not transferable. This warranty does not obligate MILLER to bear the cost of labor or transportation charges in connection with the repair or replacement of any parts found to be defective, nor shall it apply to a product upon which repairs or alterations have been made unless authorized by MILLER.

EXCEPT AS EXPRESSLY SET FORTH IN THIS WARRANTY, MILLER MAKES NO OTHER WARRANTY, EXPRESS OR IMPLIED, AND HEREBY DISCLAIMS ALL OTHER WARRANTIES INCLUDING, BUT NOT LIMITED TO, THE IMPLIED WARRANTIES OF MERCHANTABILITY AND FITNESS FOR A PARTICULAR PURPOSE. MILLER shall in no event be liable for claimed downtime, claimed loss of profits or goodwill, or any other special, incidental, indirect, or consequential damages concerning or relating to any product or parts, whether based on negligence, strict liability, breach of contract, breach of warranty, misrepresentation or any other legal theory, regardless of whether the loss resulted from any general or particular requirement which MILLER knew or had reason to know about at the time of sale.

MILLER MAKES NO WARRANTY, EXPRESS OR IMPLIED, AS TO THE FINISHED PRODUCTS MANUFACTURED OR SUPPLIED BY ANOTHER MANUFACTURER AND SUPPLIED BY MILLER TO PURCHASER, including, but not limited to, any vehicle to which a MILLER product may be affixed or any accessories or wire rope, and MILLER EXPRESSLY DISCLAIMS ANY IMPLIED WARRANTIES OF MERCHANTABILITY OR FITNESS FOR A PARTICULAR PURPOSE AS TO SUCH EQUIPMENT OR PRODUCTS. This language shall in no way affect or diminish the rights of the purchaser to rely on such warranties as are extended by such manufacturers or suppliers. MILLER shall, to the extent permitted under applicable law, pass on to the purchaser such manufacturer's or seller's warranty.

MILLER, whose policy is one of continuous improvement, reserves the right to improve its products through changes in design or materials as it may deem desirable without being obligated to incorporate such changes in products previously sold. This warranty is not intended to cover or include the following items, which are set forth by way of example and not limitation:

A. Normal deterioration of trim, paint, lettering, and appearance items due to wear or exposure to weather, road conditions, road treatments, etc.
B. Any damage or defect due to accident, misuse, abuse, improper or unauthorized repairs, failure to provide reasonable and necessary maintenance, or uses for which the equipment was not designed or intended.
C. Alterations or modifications that affect performance, operation or reliability.
D. Normal maintenance parts including, but not limited to, wear pads, bushings, wire rope, mud flaps, fenderettes, light bulbs, hydraulic oil, filters, and tow sling belts.

IT IS EXPRESSLY UNDERSTOOD THAT MILLER MAKES NO IMPLIED WARRANTY THAT MILLER PRODUCTS SHALL BE FIT FOR THE PURPOSE OF LIFTING OR MOVING PEOPLE OR FOR ANY OTHER IMPROPER USE.

Miller Industries Towing Equipment Inc.
8503 Hilltop Drive
Ooltewah, Tennessee 37363
Telephone (423) 238-4171

SERIAL NUMBER

OWNER, USER AND OPERATOR:

We appreciate your choice of our towing and recovery unit for your application. Our number one priority is user safety which is best achieved by our joint efforts. We feel that you can make a major contribution to safety if you, as the equipment owner and operator:

1. **Comply with Federal, State, and Local Regulations.**
2. **Read, Understand, and Follow the Instructions in this Manual.**
3. **Use Good, Safe Work Practices in a Common Sense Way.**
4. **Only have Authorized and Trained Personnel performing maintenance on the Towing and Recovery Unit.**

© 2023 MILLER INDUSTRIES TOWING EQUIPMENT INC. All rights reserved. Reproduction or use, without express permission, of editorial or pictorial content, in any manner, is prohibited.

TABLE OF CONTENTS

It is assumed by the manufacturer that the Owner/Operator has a thorough knowledge of the accepted and lawful retrieval and towing methods as dictated by his city, county or state. The manufacturer rejects any liability claim that may result from the incorrect or unlawful application of its equipment.

Section I - PARTS

09008488, BUA V70 2-WINCH STD JACK LEG . . . . . I-2 thru I-37

• LH/RH Jack Leg . . . . . I-2 & I-3

• Nylatron Boom Guide Pads & D-Rings . . . . . I-4 & I-5

• Emergency/Service Air Fittings & 7-Way Plug . . . . . I-6 & I-7

• Vulcan Controls - Cover Mounting Angles . . . . . I-8 & I-9

• Vulcan Controls - Lower Control Panel . . . . . I-10 & I-11

• Vulcan Controls - Control Knobs . . . . . I-12 & I-13

• Vulcan Controls - Upper Control Panels . . . . . I-14 & I-15

• Recovery Boom, Stinger & Lift Bar Assemblies . . . . . I-16 & I-17

• Toolboxes & Mounting Hardware . . . . . I-18 & I-19

• Lights, Markers & Grommets . . . . . I-20 & I-21

• Air Regulators & Water Separator . . . . . I-22 & I-23

• Mudflap Kit . . . . . I-24 & I-25

• Pressure/Return Hydraulic Lines . . . . . I-26 & I-27

• Rear Jack Legs Lift Cylinder Hydraulic Lines . . . . . I-28 & I-29

• Recovery Boom Extend Cylinder Hydraulic Lines . . . . . I-30 & I-31

• Front/Rear Recovery Winch Hydraulic Lines . . . . . I-32 & I-33

TABLE OF CONTENTS

Section I - PARTS

09008488, BUA V70 2-WINCH STD JACK LEG (cont'd)

• Stinger Tilt Cylinder Hydraulic Lines . . . . . I-34 & I-35

• Stinger Extend Cylinder Hydraulic Lines . . . . . I-36 & I-37

09008489, BUA V70 2-WINCH JACK LEG FLIPPER FEET . . . . . I-38 thru I-73

• LH/RH Jack Leg Flipper Feet Option . . . . . I-38 & I-39

• Nylatron Boom Guide Pads . . . . . I-40 & I-41

• Emergency/Service Air Fittings & 7-Way Plug . . . . . I-42 & I-43

• Vulcan Controls - Cover Mounting Angles . . . . . I-44 & I-45

• Vulcan Controls - Lower Control Panel . . . . . I-46 & I-47

• Vulcan Controls - Control Knobs . . . . . I-48 & I-49

• Vulcan Controls - Upper Control Panels . . . . . I-50 & I-51

• Recovery Boom, Stinger & Lift Bar Assemblies . . . . . I-52 & I-53

• Toolboxes & Mounting Hardware . . . . . I-54 & I-55

• Lights, Markers & Grommets . . . . . I-56 & I-57

• Air Regulators & Water Separator . . . . . I-58 & I-59

• Mudflap Kit . . . . . I-60 & I-61

• Pressure/Return Hydraulic Lines . . . . . I-62 & I-63

• Rear Jack Legs Lift Cylinder Hydraulic Lines . . . . . I-64 & I-65

TABLE OF CONTENTS

Section I - PARTS

09008489, BUA V70 2W JL FLIPPER FEET (cont'd)

• Recovery Boom Extend Cylinder Hydraulic Lines . . . . . I-66 & I-67

• Front/Rear Recovery Winch Hydraulic Lines . . . . . I-68 & I-69

• Stinger Tilt Cylinder Hydraulic Lines . . . . . I-70 & I-71

• Stinger Extend Cylinder Hydraulic Lines . . . . . I-72 & I-73

0910973, LH JACK LEG ASSY - FLIPPER FEET . . . . . I-74 thru I-79

• LH Flipper Pad Weldment, Ground Blade & Fasteners . . . . . I-74 & I-75

• Lower Jack Leg and Pivot Pins, Snap Rings & Retainer Assembly Pin . . . . . I-76 & I-77

• D-Ring & Spring/Safety Snap Pins . . . . . I-78 & I-79

0910974, RH JACK LEG ASSY - FLIPPER FEET . . . . . I-80 thru I-85

• RH Flipper Pad Weldment, Ground Blade & Fasteners . . . . . I-80 & I-81

• Lower Jack Leg and Pivot Pins, Snap Rings & Retainer Assembly Pin . . . . . I-82 & I-83

• D-Ring & Spring/Safety Snap Pins . . . . . I-84 & I-85

09008490, BUA V70 2-WINCH REAR OUTRIGGER . . . . . I-86 thru I-131

• LH/RH Rear Outriggers with Kit . . . . . I-86 & I-87

• Recovery Boom Nylatron Guide Pads . . . . . I-88 & I-89

• Recovery Boom, Stinger & Lift Bar Assemblies . . . . . I-91 & I-91

• Emergency/Service Air Fittings & 7-Way . . . . . I-92 & I-93

TABLE OF CONTENTS

Section I - PARTS

09008490, BUA V70 2-WINCH REAR OUTRIGGER (cont'd)

• Vulcan Controls - Cover Mounting Angles . . . . . I-94 & I-95

• Vulcan Controls - Lower Control Panel . . . . . I-96 & I-97

• Vulcan Controls - Control Knobs . . . . . I-98 & I-99

• Vulcan Controls - Upper LH Control Panel . . . . . I-100 & I-101

• Vulcan Controls - Upper RH Control Panel . . . . . I-102 & I-103

• Toolboxes & Mounting Hardware . . . . . I-104 & I-105

• Lights & Grommets . . . . . I-106 & I-107

• Air Regulators & Water Separator Kit . . . . . I-108 & I-109

• Mudflap Kit . . . . . I-110 & I-111

• Pressure/Return Hydraulic Lines . . . . . I-112 & I-113

• Rear Outrigger Return Hydraulic Lines . . . . . I-114 & I-115

• RH Rear Outrigger Lift Cylinder Hydraulic Lines . . . . . I-116 & I-117

• RH Rear Outrigger Extend Cylinder Hydraulic Lines . . . . . I-118 & I-119

• LH Rear Outrigger Lift Cylinder Hydraulic Lines . . . . . I-120 & I-121

• LH Rear Outrigger Extend Cylinder Hydraulic Lines . . . . . I-122 & I-123

• Front/Rear Recovery Winch Hydraulic Lines . . . . . I-124 & I-125

• Stinger Tilt Cylinder Hydraulic Lines . . . . . I-126 & I-127

• Stinger Extend Cylinder Hydraulic Lines . . . . . I-128 & I-129

TABLE OF CONTENTS

Section I - PARTS

09008490, BUA V70 2-WINCH REAR OUTRIGGER (cont'd)

• Recovery Boom Extend Cylinder Hydraulic Lines . . . . . I-130 & I-131

0911120, LH REAR OUTRIGGER ASSEMBLY . . . . . I-132 & I-133

0911121, RH REAR OUTRIGGER ASSEMBLY . . . . . I-134 & I-135

0906963, PIN - REAR OUTRIGGER PAD ASSEMBLY . . . . . I-136 & I-137

0911122, PIN ASSEMBLY - PAD LOCK . . . . . I-138 & I-139

0911123, PIN ASSEMBLY - SPADE LOCK . . . . . I-140 & I-141

0911124, PIN ASSEMBLY - SPADE PIVOT . . . . . I-142 & I-143

0911167, SPADE ASSEMBLY - REAR OUTRIGGER . . . . . I-144 & I-145

0910787, STINGER ASSY - EURO - 144" . . . . . I-146 thru I-151

• Extend Cylinder, Fittings, Tubes, Pads & Pins . . . . . I-146 & I-147

• First Stage Stinger Weldment, Pad Retainer Plate, Pads, Grease Fittings & Fasteners . . . . . I-148 & I-149

• Folding Boom Weldment, Pin Weldments, Pad Retainer Plate, Pads & Fasteners . . . . . I-150 & I-151

0911010, RECOVERY BOOM INSTALL V-70 . . . . . I-152 thru I-155

• Recovery Boom Install Items . . . . . I-152 & I-153

• Tilt Cylinder with Fittings & Lower Guide Pad/Vertical Stop Block Weldments . . . . . I-154 & I-155

0911033, RECOVERY BOOM ASSEMBLY V-70 . . . . . I-156 thru I-163

• Inner Boom Assembly Items . . . . . I-156 & I-157

TABLE OF CONTENTS

Section I - PARTS

0911033, RECOVERY BOOM ASSEMBLY V-70 (cont'd)

• Outer Boom 3-Winch Weldment, Cover Plates & Hydraulic Tubes with Clamps . . . . . I-158 & I-159

• Recovery Winches, Fittings & Mounting Plates . . . . . I-160 & I-161

• Channel Rope Guide, Cable Support Bar & D-Ring . . . . . I-162 & I-163

0908424, SWIVEL-BOOM ASSEMBLY . . . . . I-164 & I-165

0911804, AIR REGULATOR-GAUGE ASSEMBLY . . . . . I-166 & I-167

0912015, SUBFRAME ASSEMBLY V70-100 STD WINCH . . . . . I-168 thru I-201

• Pivot Block Weldments, Spherical Torrin Bearing, Washer/Tie Plates & Fasteners . . . . . I-168 & I-169

• D-Rings, Fork Retaining Pins & Vulcan Support Channels . . . . . I-170 & I-171

• Jack Leg Cylinders, Holding Valves, Pins & Covers . . . . . I-172 & I-173

• Lift Cylinder Manifold Block, Fittings & Fasteners . . . . . I-174 & I-175

• Lift Cylinders, Lower Pins/Washer Plates, Fittings & Fasteners . . . . . I-176 & I-177

• Control Station Assembly, Grease Fittings & Fasteners . . . . . I-178 & I-179

• RH Recovery Winch Hydraulic Tubes . . . . . I-180 & I-181

• Stinger Tilt Cylinder Hydraulic Tubes . . . . . I-182 & I-183

• Stinger Extend/Retract Cylinder Hydraulic Tubes . . . . . I-184 & I-185

• Recovery Boom Extend/Retract Cylinder Hydraulic Tubes . . . . . I-186 & I-187

• LH Recovery Winch Hydraulic Tubes . . . . . I-188 & I-189

• Pump/Main Valve Pressure Hydraulic Tubes . . . . . I-190 & I-191

TABLE OF CONTENTS

Section I - PARTS

0912015, SUBFRAME ASSEMBLY V70-100 STD WINCH (cont'd)

• Hydraulic Tank Assembly, Fittings & Mounts . . . . . I-192 & I-193

• Hydraulic Tank/Main Valve Drain Lines . . . . . I-194 & I-195

• Hydraulic Tank/Main Valve Drain Lines Single Tube Clamps . . . . . I-196 & I-197

• Jack Leg Up/Down Cylinders Hydraulic Lines . . . . . I-198 & I-199

• Lift Cylinders, Manifold Block & Main Valve Hydraulic Lines . . . . . I-200 & I-201

0911746, HYD TANK ASSEMBLY VULCAN XTRA WINCH . . . . . I-202 & I-203

0912023, CONTROL STATION ASSEMBLY STD WINCH . . . . . I-204 thru I-239

• Mid-Inlet 9 Spool Valve . . . . . I-204 & I-205

• Front/Rear Hydraulic Tubes & Fittings . . . . . I-206 & I-207

• Recovery Boom - Extend Cylinder Hydraulic Tubes & Fittings . . . . . I-208 & I-209

• Underlift Stinger - Extend Cylinder Hydraulic Tubes & Fittings . . . . . I-210 & I-211

• Underlift Stinger - Tilt Cylinder Hydraulic Tubes & Fittings . . . . . I-212 & I-213

• (LH) Stiffleg - Up/Down Cylinder Hydraulic Tubes & Fittings . . . . . I-214 & I-215

• (RH) Stiffleg - Up/Down Cylinder Hydraulic Tubes & Fittings . . . . . I-216 & I-217

• Recovery Winch (Front) Hydraulic Tubes & Fittings . . . . . I-218 & I-219

• Return Lines Hydraulic Tubes & Fittings . . . . . I-220 & I-221

• Recovery Boom - Lift Cylinders Hydraulic Tubes & Fittings . . . . . I-222 & I-223

• Recovery Winch (Rear) Hydraulic Tubes & Fittings . . . . . I-224 & I-225

TABLE OF CONTENTS

Section I - PARTS

0912023, CONTROL STATION ASSEMBLY STD WINCH (cont'd)

• Plugs . . . . . I-226 & I-227

• Dual Controls Channel Weldments . . . . . I-228 & I-229

• Control Lug Weldment (Medium) with LH/RH Control Rod (Short) . . . . . I-230 & I-231

• Control Lug Weldment (Long) with LH/RH Control Rod (Short) . . . . . I-232 & I-233

• Control Lug Weldment (Short) with LH/RH Control Rod (Short) . . . . . I-234 & I-235

• Control Handle Assembly (Short/Long) . . . . . I-236 & I-237

• Cover Assembly . . . . . I-238 & I-239

09007528, COVER ASSEMBLY . . . . . I-240 & I-241

948570000, 5X5 LIFT BAR ASSEMBLY 948 XHD . . . . . I-242 & I-243

NOTES

Section I - PARTS

REF. 05004926

This Section is provided by the manufacturer for the purpose of ordering any component part of the **Vulcan V-70 2-WINCH STD Jack Leg, Jack Leg With Flipper Feet & Rear Outrigger Models** that may be required when part replacement is necessary. Be certain to use only original equipment replacement parts for warranty purposes as well as for keeping your unit in its original state and optimum operating capacities.

When ordering replacement or spare parts be sure to provide the following information to the manufacturer's **Parts Department**.

1. **Manual Number & Date of Publication**
2. **Manual Page Number**
3. **Page Title**
4. **Reference Number of Part Desired**
5. **Part Number**
6. **Part Description**
7. **Quantity of Part Desired**
8. **Unit Serial Number**

Providing this information will help ensure that the correct parts will be delivered to you in an expedient manner without delay. Should additional information be required for repair or replacement of certain components, contact your Wrecker Manufacturer Authorized Representative.

The Manufacturer reserves the right, without notice or obligation, to improve or modify their products, which may change the specifications, models and feature availability.

09008488, BUA V70 2-WINCH STD JACK LEG

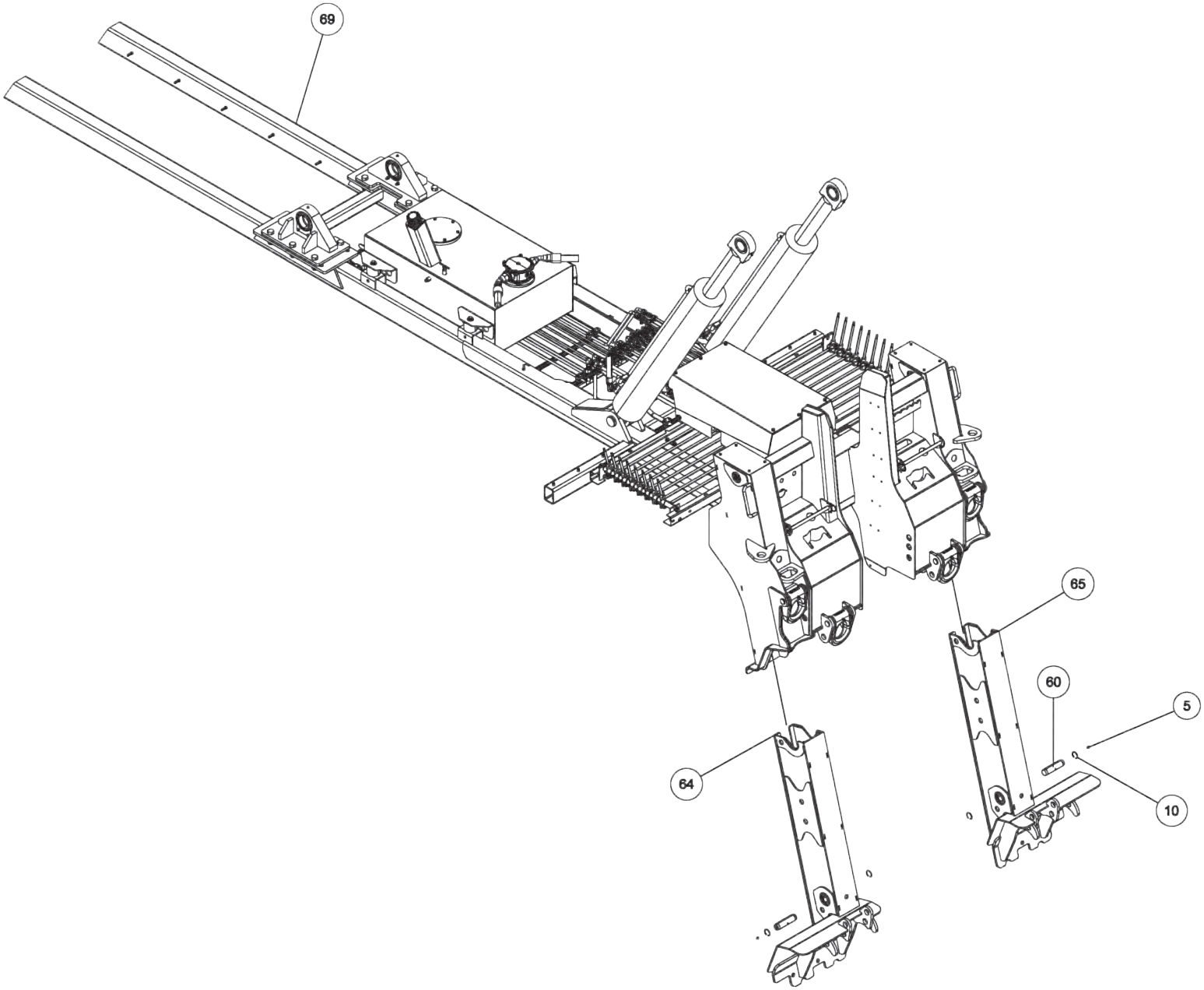

09008488, BUA V70 2-WINCH STD JACK LEG (cont'd)

ITEM	PART NUMBER	DESCRIPTION	QTY
	09008488	BUA V70 2W STD JL	
1	0300341	KNOB, BLACK (BLANK)	12
2	0300364	CLAMP-HOSE,0.875"-2.75" 50"LBS	8
3	0301473	HOSE HYD, 18" LG	4
4	0301696	FITTING, ELB 90 DEG 6MJ-6FJX90	4
5	0301895	GREASE FITTING, 1/8 STR PTF	2
6	0301909	RECEPTACLE BOOT	1
7	0301946	FITTING, BLKHD CONNECT	3
8	0301947	FITTING, 45 DEG ADAPTER	1
9	0301948	HD 7 WAY TRAILER CONNECT	1
10	0301959	SNAP RING-INTERNAL 1-1/2	4
11	0302205	GAUGE, FLUSH MNTG-6000 PSI	4
12	0302534	FITTING, 45 DEG ELBOW	2
13	0302698	FITTING, HOSE BARB,1-1/4	2
14	0302901	HOSE HYD, 120" 12C12	2
15	0303538	FITT, ADAPTER -BRASS 8FP-6MP	1
16	0303539	QUICK DISCONNECT 3/8 FPT	1
17	0303948	ELBOW, 12MJ-16MB90	2
18	0304363	QUICK DISCONNECT 1/2 FPT	2
19	0306539	HOSE BARB 20HOSE16MB90	2
20	0306983	FITT-MALE RUNTEE 1/4T-1/4NPT	1
21	0307216	LIGHT, AMBER LED RECT 5.25X3.3	2
22	0307538	LIGHT, MRKR-RED LED 4.5 X 1.63	4
23	0307604	KNOB, RED LONG - SK0700-07	4
24	0307778	PLUG, FILLER	2
25	0310010	SUCTION HOSE,1-1/4ID X50 100R4	1
26	0311014	2010 VULC ALUM BODY 160CB LH	1
27	0311015	2010 VULC ALUM BODY 160CB RH	1
28	0311355	HOBBS HOURMETER	1
29	0311502	LIGHT 6" OVAL CLEAR-AMBER LED	6
30	0311503	GROMMET, LIGHT 6" OVAL	6
31	0311508	LIGHT RECT CLEAR-RED LED	4
32	0311510	LIGHT RECT REVERSE W/REFLEX	2
33	0311511	GROMMET, TAIL LIGHT, RECTANGULAR	8
34	0311755	WATER SEPARATOR-MONNIER	1
35	04000381	SS BHSCS 1/4-20 X 1	16
36	0400070	SCREW, 1/4-20X1 HHC GR5	6
37	0400107	SCREW, 5/16-18X2-1/2 HHC GR5	2
38	0400128	SCREW, 3/8-16X1-1/4 FHS GR8 BO	24
39	0400369	NUT, 1/4 SPR J	8
40	0400393	NUT, 3/8-16 JAM	16
41	0400451	WASHER, 1/4	6
42	0400454	WASHER, 1/4 SS	22
43	0400491	LKWASHER, 1/2	14
44	0400498	WASHER, 1/2X2X0.125	14
45	0400687	SCREW, 10-24X3/4 PRH SS	4

ITEM	PART NUMBER	DESCRIPTION	QTY
46	0400776	NUT, 5/16-18 JAM LOK	2
47	0400816	WASHER, M10 SS	4
48	0401054	SCREW, 8-32X3/4 PRH SS	12
49	0402002	NUT, 8-32 LOK EXT SS	12
50	0402020	SCREW, 1/4-20X3/4 HHC SS	2
51	0402021	SCREW, 1/4-20X1 HHC SS	2
52	0402043	SCREW, 3/8-16X1-1/4 HHC SS	8
53	0402111	LKWASHER, 1/4 SS	18
54	0402113	NUT, 1/4-20 LOK SS	2
55	0402120	WASHER, 3/8 SS	16
56	0402121	LKWASHER, 3/8 SS	8
57	0402122	NUT, 3/8-16 HEX SS	8
58	0719585	D-RING, TOWING	2
59	0724476	PAD - NYLATRON - BBOM GUIDE	4
60	0724500	PIN - LOWER JACK LEG CYL	2
61	0726593	APNL-DCV LWR CTL PNL, 3 WINCH	2
62	0726594	APNL-DCV UPR LH CTL PNL, 3WNCH	1
63	0726595	APNL-DCV UPR RH CTL PNL, 3WNCH	1
64	0807947	LH JACK LEG WELD'T - STANDARD	1
65	0807948	RH JACK LEG WELD'T - STANDARD	1
66	0910787	STINGER ASSY - EURO - 144"	1
67	0911010	RECOVERY BOOM INSTALL V-70	1
68	0911804	AIR REGULATOR-GAUGE ASSEMBLY	2
69	0912015	SUBFRAME ASSY V70-100 STDWINCH	1
70	9010520	FITTING-ELBOW 1/4T-1/4NPT	2
71	9011053	FITTING, BRASS 1/4 TUBE-1/4 MP	1
72	9016815	MUNCIE PUMP TSPKS17-17-2BSSB	1
73	9024041	SWITCH, ROCKER SPST RED 12V21A	11
74	9041403	1/2 NC X 1 1/2 HHCS PL GR8	14
75	916770001	HOSE- HYD. 3/8 - 105" 8MJ-6MFA	2
76	920400005	MUD FLAP BRACE PLATE	2
77	9402970	TOOLBOX MTG. PAD	14
78	942480011	PLATE,SLOT-SS REAR WASHER TBOX	14
79	942480300	MTG ANGLE WELD'T LH - DCV COV.	2
80	942487300	MTG ANGLE WELD'T RH - DCV COV.	2
81	94320052	MUD FLAP 920-940 RUBBER	2
82	945770002	6AT2(6T90S-8MJ) HCL 48	2
83	945770003	6AT2(6T90L-8MJ) 24 HYD	4
84	946210500	TUBE, FRONT MTG WELD'T	1
85	946770003	HOSE ASSEMBLY - 8MJ-8MJ X 45	4
86	946770006	HOSE ASSEMBLY - 62	2
87	946770007	HOSE ASSEMBLY - 79	2
88	946770009	HOSE ASSEMBLY - 104	4
89	948570000	5X5 LIFT BAR ASSEMBLY 948 XHD	1
90	GA0215	PIN-"D" RING	2

09008488, BUA V70 2-WINCH STD JACK LEG (cont'd)

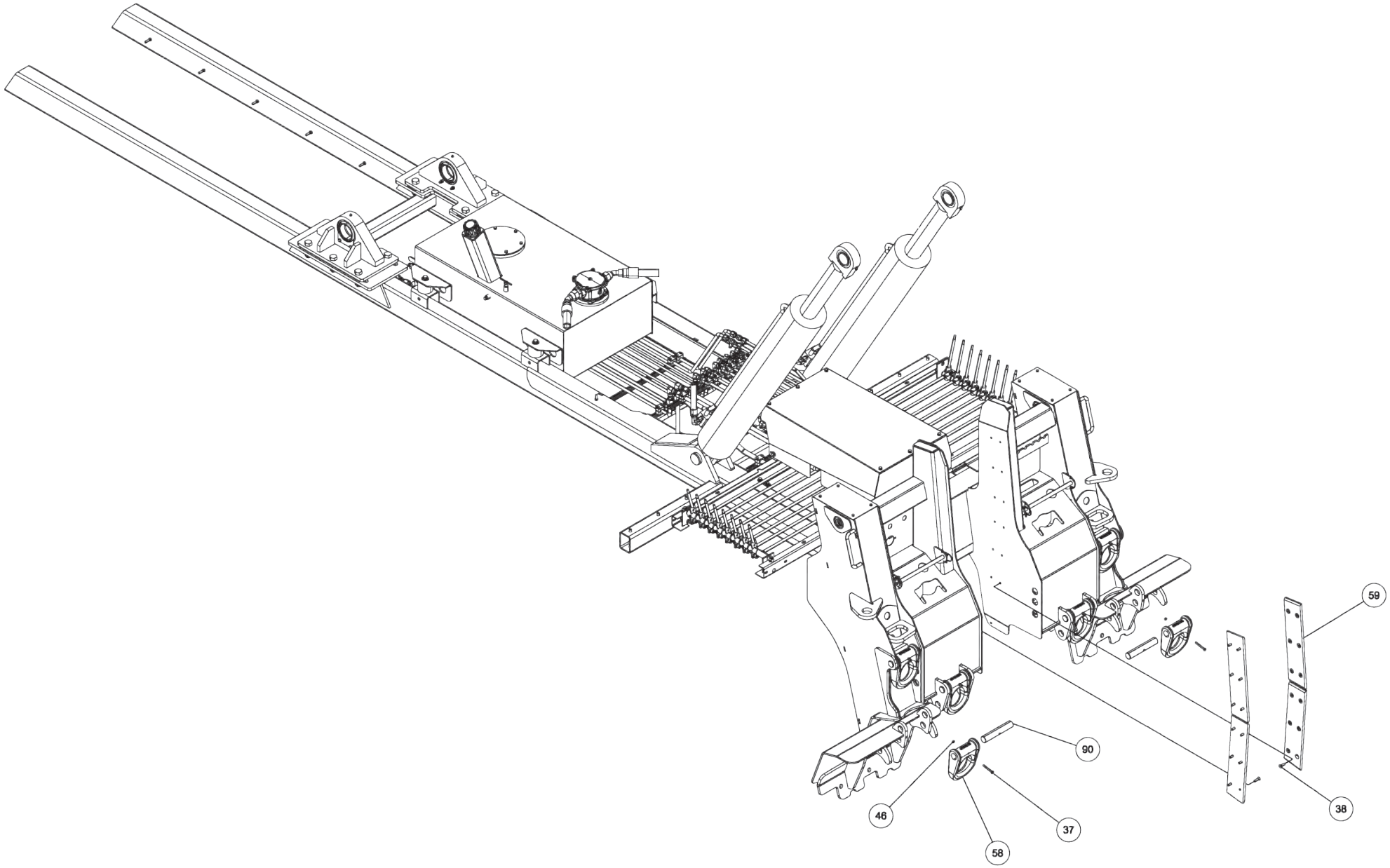

09008488, BUA V70 2-WINCH STD JACK LEG (cont'd)

ITEM	PART NUMBER	DESCRIPTION	QTY
	09008488	BUA V70 2W STD JL	
1	0300341	KNOB, BLACK (BLANK)	12
2	0300364	CLAMP-HOSE,0.875"-2.75" 50"LBS	8
3	0301473	HOSE HYD, 18" LG	4
4	0301696	FITTING, ELB 90 DEG 6MJ-6FJX90	4
5	0301895	GREASE FITTING, 1/8 STR PTF	2
6	0301909	RECEPTACLE BOOT	1
7	0301946	FITTING, BLKHD CONNECT	3
8	0301947	FITTING, 45 DEG ADAPTER	1
9	0301948	HD 7 WAY TRAILER CONNECT	1
10	0301959	SNAP RING-INTERNAL 1-1/2	4
11	0302205	GAUGE, FLUSH MNTG-6000 PSI	4
12	0302534	FITTING, 45 DEG ELBOW	2
13	0302698	FITTING, HOSE BARB,1-1/4	2
14	0302901	HOSE HYD, 120" 12C12	2
15	0303538	FITT, ADAPTER -BRASS 8FP-6MP	1
16	0303539	QUICK DISCONNECT 3/8 FPT	1
17	0303948	ELBOW, 12MJ-16MB90	2
18	0304363	QUICK DISCONNECT 1/2 FPT	2
19	0306539	HOSE BARB 20HOSE16MB90	2
20	0306983	FITT-MALE RUNTEE 1/4T-1/4NPT	1
21	0307216	LIGHT, AMBER LED RECT 5.25X3.3	2
22	0307538	LIGHT, MRKR-RED LED 4.5 X 1.63	4
23	0307604	KNOB, RED LONG - SK0700-07	4
24	0307778	PLUG, FILLER	2
25	0310010	SUCTION HOSE,1-1/4ID X50 100R4	1
26	0311014	2010 VULC ALUM BODY 160CB LH	1
27	0311015	2010 VULC ALUM BODY 160CB RH	1
28	0311355	HOBBS HOURMETER	1
29	0311502	LIGHT 6" OVAL CLEAR-AMBER LED	6
30	0311503	GROMMET, LIGHT 6" OVAL	6
31	0311508	LIGHT RECT CLEAR-RED LED	4
32	0311510	LIGHT RECT REVERSE W/REFLEX	2
33	0311511	GROMMET, TAIL LIGHT, RECTANGULAR	8
34	0311755	WATER SEPARATOR-MONNIER	1
35	04000381	SS BHSCS 1/4-20 X 1	16
36	0400070	SCREW, 1/4-20X1 HHC GR5	6
37	0400107	SCREW, 5/16-18X2-1/2 HHC GR5	2
38	0400128	SCREW, 3/8-16X1-1/4 FHS GR8 BO	24
39	0400369	NUT, 1/4 SPR J	8
40	0400393	NUT, 3/8-16 JAM	16
41	0400451	WASHER, 1/4	6
42	0400454	WASHER, 1/4 SS	22
43	0400491	LKWASHER, 1/2	14
44	0400498	WASHER, 1/2X2X0.125	14
45	0400687	SCREW, 10-24X3/4 PRH SS	4

ITEM	PART NUMBER	DESCRIPTION	QTY
46	0400776	NUT, 5/16-18 JAM LOK	2
47	0400816	WASHER, M10 SS	4
48	0401054	SCREW, 8-32X3/4 PRH SS	12
49	0402002	NUT, 8-32 LOK EXT SS	12
50	0402020	SCREW, 1/4-20X3/4 HHC SS	2
51	0402021	SCREW, 1/4-20X1 HHC SS	2
52	0402043	SCREW, 3/8-16X1-1/4 HHC SS	8
53	0402111	LKWASHER, 1/4 SS	18
54	0402113	NUT, 1/4-20 LOK SS	2
55	0402120	WASHER, 3/8 SS	16
56	0402121	LKWASHER, 3/8 SS	8
57	0402122	NUT, 3/8-16 HEX SS	8
58	0719585	D-RING, TOWING	2
59	0724476	PAD - NYLATRON - BBOM GUIDE	4
60	0724500	PIN - LOWER JACK LEG CYL	2
61	0726593	APNL-DCV LWR CTL PNL, 3 WINCH	2
62	0726594	APNL-DCV UPR LH CTL PNL, 3WNCH	1
63	0726595	APNL-DCV UPR RH CTL PNL, 3WNCH	1
64	0807947	LH JACK LEG WELD'T - STANDARD	1
65	0807948	RH JACK LEG WELD'T - STANDARD	1
66	0910787	STINGER ASSY - EURO - 144"	1
67	0911010	RECOVERY BOOM INSTALL V-70	1
68	0911804	AIR REGULATOR-GAUGE ASSEMBLY	2
69	0912015	SUBFRAME ASSY V70-100 STDWINCH	1
70	9010520	FITTING-ELBOW 1/4T-1/4NPT	2
71	9011053	FITTING, BRASS 1/4 TUBE-1/4 MP	1
72	9016815	MUNCIE PUMP TSPKS17-17-2BSSB	1
73	9024041	SWITCH, ROCKER SPST RED 12V21A	11
74	9041403	1/2 NC X 1 1/2 HHCS PL GR8	14
75	916770001	HOSE- HYD. 3/8 - 105" 8MJ-6MFA	2
76	920400005	MUD FLAP BRACE PLATE	2
77	9402970	TOOLBOX MTG. PAD	14
78	942480011	PLATE,SLOT-SS REAR WASHER TBOX	14
79	942480300	MTG ANGLE WELD'T LH - DCV COV.	2
80	942487300	MTG ANGLE WELD'T RH - DCV COV.	2
81	94320052	MUD FLAP 920-940 RUBBER	2
82	945770002	6AT2(6T90S-8MJ) HCL 48	2
83	945770003	6AT2(6T90L-8MJ) 24 HYD	4
84	946210500	TUBE, FRONT MTG WELD'T	1
85	946770003	HOSE ASSEMBLY - 8MJ-8MJ X 45	4
86	946770006	HOSE ASSEMBLY - 62	2
87	946770007	HOSE ASSEMBLY - 79	2
88	946770009	HOSE ASSEMBLY - 104	4
89	948570000	5X5 LIFT BAR ASSEMBLY 948 XHD	1
90	GA0215	PIN-"D" RING	2

09008488, BUA V70 2-WINCH STD JACK LEG (cont'd)

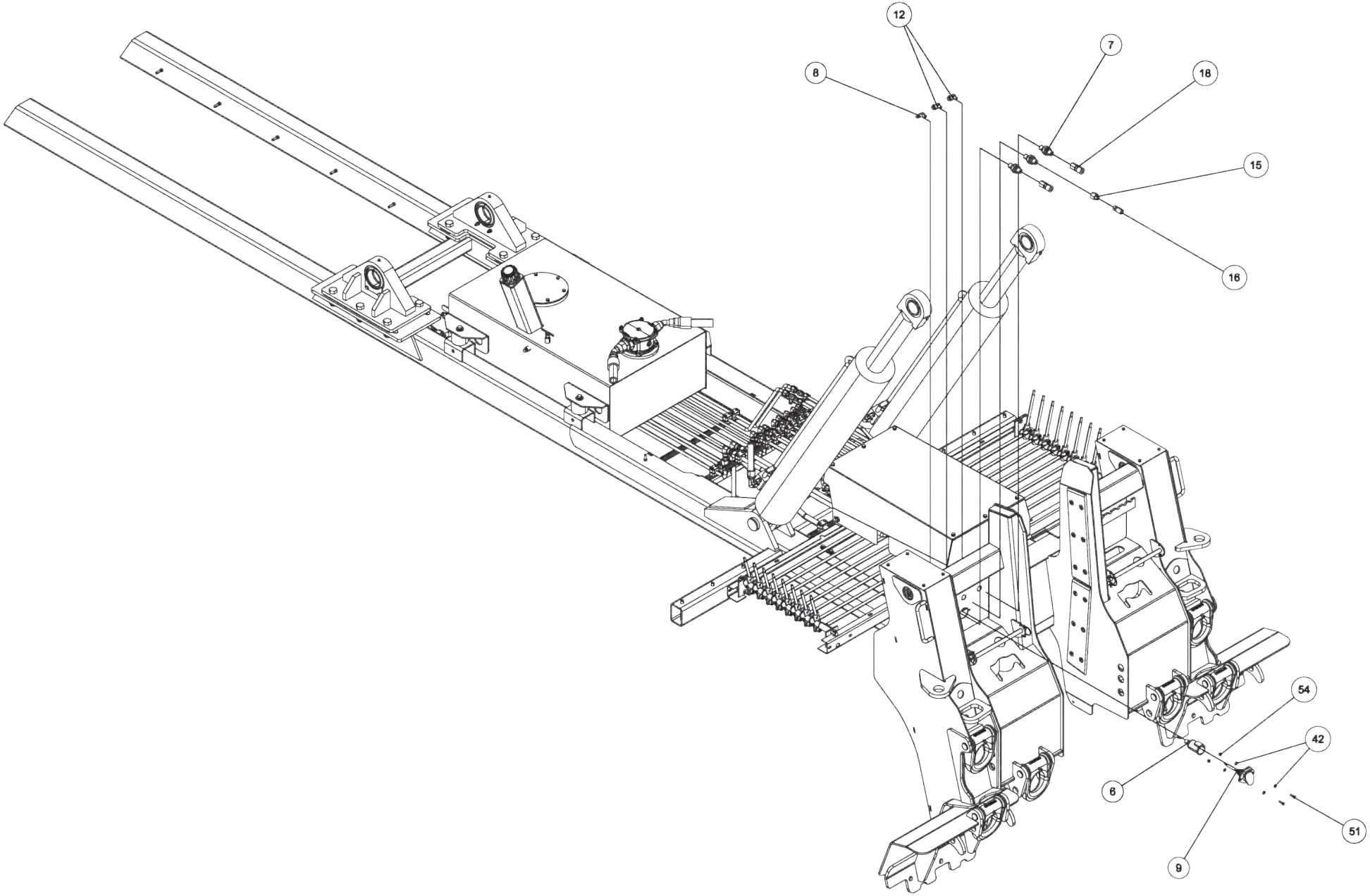

09008488, BUA V70 2-WINCH STD JACK LEG (cont'd)

ITEM	PART NUMBER	DESCRIPTION	QTY
	09008488	BUA V70 2W STD JL	
1	0300341	KNOB, BLACK (BLANK)	12
2	0300364	CLAMP-HOSE,0.875"-2.75" 50"LBS	8
3	0301473	HOSE HYD, 18" LG	4
4	0301696	FITTING, ELB 90 DEG 6MJ-6FJX90	4
5	0301895	GREASE FITTING, 1/8 STR PTF	2
6	0301909	RECEPTACLE BOOT	1
7	0301946	FITTING, BLKHD CONNECT	3
8	0301947	FITTING, 45 DEG ADAPTER	1
9	0301948	HD 7 WAY TRAILER CONNECT	1
10	0301959	SNAP RING-INTERNAL 1-1/2	4
11	0302205	GAUGE, FLUSH MNTG-6000 PSI	4
12	0302534	FITTING, 45 DEG ELBOW	2
13	0302698	FITTING, HOSE BARB,1-1/4	2
14	0302901	HOSE HYD, 120" 12C12	2
15	0303538	FITT, ADAPTER -BRASS 8FP-6MP	1
16	0303539	QUICK DISCONNECT 3/8 FPT	1
17	0303948	ELBOW, 12MJ-16MB90	2
18	0304363	QUICK DISCONNECT 1/2 FPT	2
19	0306539	HOSE BARB 20HOSE16MB90	2
20	0306983	FITT-MALE RUNTEE 1/4T-1/4NPT	1
21	0307216	LIGHT, AMBER LED RECT 5.25X3.3	2
22	0307538	LIGHT, MRKR-RED LED 4.5 X 1.63	4
23	0307604	KNOB, RED LONG - SK0700-07	4
24	0307778	PLUG, FILLER	2
25	0310010	SUCTION HOSE,1-1/4ID X50 100R4	1
26	0311014	2010 VULC ALUM BODY 160CB LH	1
27	0311015	2010 VULC ALUM BODY 160CB RH	1
28	0311355	HOBBS HOURMETER	1
29	0311502	LIGHT 6" OVAL CLEAR-AMBER LED	6
30	0311503	GROMMET, LIGHT 6" OVAL	6
31	0311508	LIGHT RECT CLEAR-RED LED	4
32	0311510	LIGHT RECT REVERSE W/REFLEX	2
33	0311511	GROMMET, TAIL LIGHT, RECTANGULAR	8
34	0311755	WATER SEPARATOR-MONNIER	1
35	04000381	SS BHSCS 1/4-20 X 1	16
36	0400070	SCREW, 1/4-20X1 HHC GR5	6
37	0400107	SCREW, 5/16-18X2-1/2 HHC GR5	2
38	0400128	SCREW, 3/8-16X1-1/4 FHS GR8 BO	24
39	0400369	NUT, 1/4 SPR J	8
40	0400393	NUT, 3/8-16 JAM	16
41	0400451	WASHER, 1/4	6
42	0400454	WASHER, 1/4 SS	22
43	0400491	LKWASHER, 1/2	14
44	0400498	WASHER, 1/2X2X0.125	14
45	0400687	SCREW, 10-24X3/4 PRH SS	4

ITEM	PART NUMBER	DESCRIPTION	QTY
46	0400776	NUT, 5/16-18 JAM LOK	2
47	0400816	WASHER, M10 SS	4
48	0401054	SCREW, 8-32X3/4 PRH SS	12
49	0402002	NUT, 8-32 LOK EXT SS	12
50	0402020	SCREW, 1/4-20X3/4 HHC SS	2
51	0402021	SCREW, 1/4-20X1 HHC SS	2
52	0402043	SCREW, 3/8-16X1-1/4 HHC SS	8
53	0402111	LKWASHER, 1/4 SS	18
54	0402113	NUT, 1/4-20 LOK SS	2
55	0402120	WASHER, 3/8 SS	16
56	0402121	LKWASHER, 3/8 SS	8
57	0402122	NUT, 3/8-16 HEX SS	8
58	0719585	D-RING, TOWING	2
59	0724476	PAD - NYLATRON - BBOM GUIDE	4
60	0724500	PIN - LOWER JACK LEG CYL	2
61	0726593	APNL-DCV LWR CTL PNL, 3 WINCH	2
62	0726594	APNL-DCV UPR LH CTL PNL, 3WNCH	1
63	0726595	APNL-DCV UPR RH CTL PNL, 3WNCH	1
64	0807947	LH JACK LEG WELD'T - STANDARD	1
65	0807948	RH JACK LEG WELD'T - STANDARD	1
66	0910787	STINGER ASSY - EURO - 144"	1
67	0911010	RECOVERY BOOM INSTALL V-70	1
68	0911804	AIR REGULATOR-GAUGE ASSEMBLY	2
69	0912015	SUBFRAME ASSY V70-100 STDWINCH	1
70	9010520	FITTING-ELBOW 1/4T-1/4NPT	2
71	9011053	FITTING, BRASS 1/4 TUBE-1/4 MP	1
72	9016815	MUNCIE PUMP TSPKS17-17-2BSSB	1
73	9024041	SWITCH, ROCKER SPST RED 12V21A	11
74	9041403	1/2 NC X 1 1/2 HHCS PL GR8	14
75	916770001	HOSE- HYD. 3/8 - 105" 8MJ-6MFA	2
76	920400005	MUD FLAP BRACE PLATE	2
77	9402970	TOOLBOX MTG. PAD	14
78	942480011	PLATE,SLOT-SS REAR WASHER TBOX	14
79	942480300	MTG ANGLE WELD'T LH - DCV COV.	2
80	942487300	MTG ANGLE WELD'T RH - DCV COV.	2
81	94320052	MUD FLAP 920-940 RUBBER	2
82	945770002	6AT2(6T90S-8MJ) HCL 48	2
83	945770003	6AT2(6T90L-8MJ) 24 HYD	4
84	946210500	TUBE, FRONT MTG WELD'T	1
85	946770003	HOSE ASSEMBLY - 8MJ-8MJ X 45	4
86	946770006	HOSE ASSEMBLY - 62	2
87	946770007	HOSE ASSEMBLY - 79	2
88	946770009	HOSE ASSEMBLY - 104	4
89	948570000	5X5 LIFT BAR ASSEMBLY 948 XHD	1
90	GA0215	PIN-"D" RING	2

09008488, BUA V70 2-WINCH STD JACK LEG (cont'd)

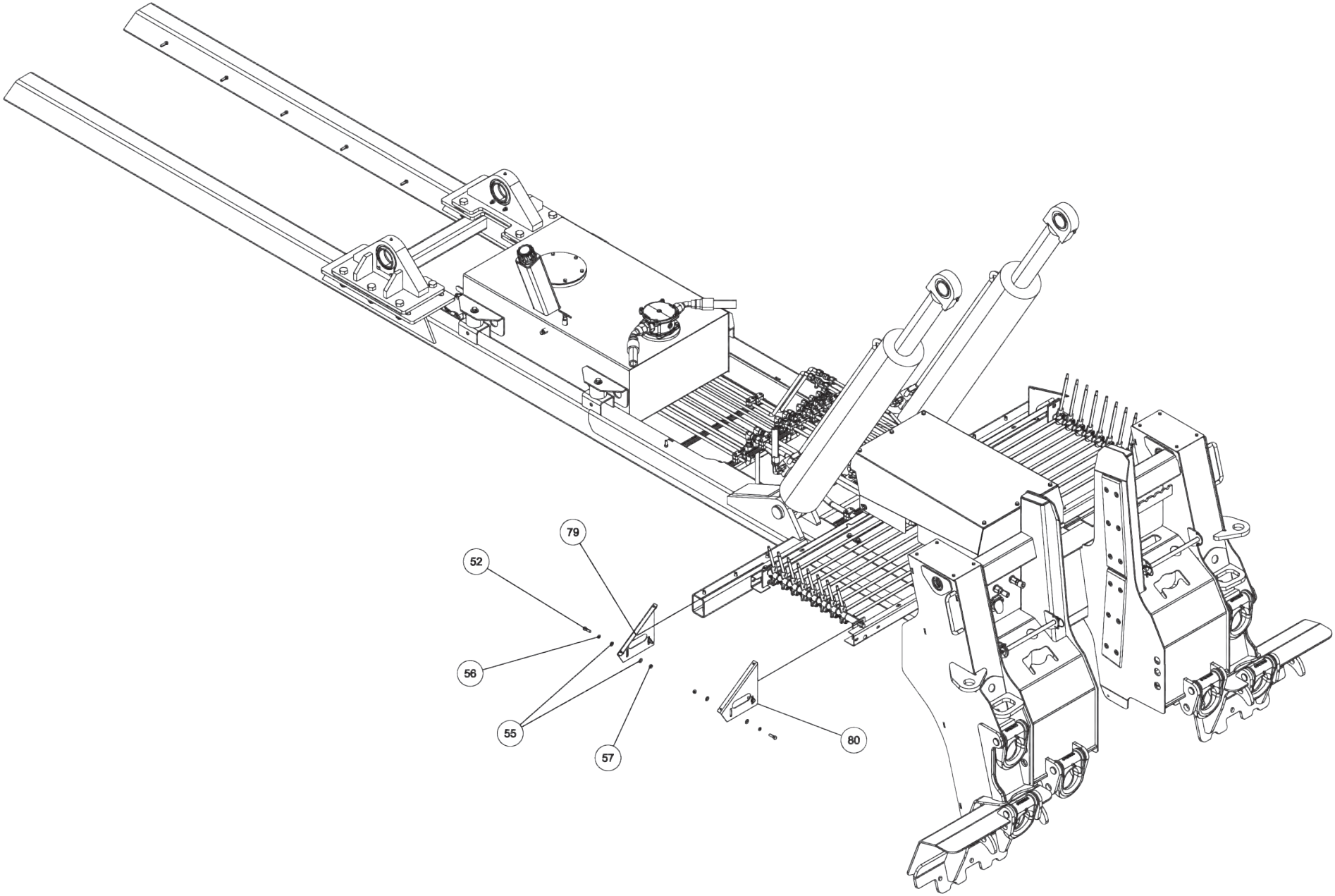

09008488, BUA V70 2-WINCH STD JACK LEG (cont'd)

ITEM	PART NUMBER	DESCRIPTION	QTY
	09008488	BUA V70 2W STD JL	
1	0300341	KNOB, BLACK (BLANK)	12
2	0300364	CLAMP-HOSE,0.875"-2.75" 50"LBS	8
3	0301473	HOSE HYD, 18" LG	4
4	0301696	FITTING, ELB 90 DEG 6MJ-6FJX90	4
5	0301895	GREASE FITTING, 1/8 STR PTF	2
6	0301909	RECEPTACLE BOOT	1
7	0301946	FITTING, BLKHD CONNECT	3
8	0301947	FITTING, 45 DEG ADAPTER	1
9	0301948	HD 7 WAY TRAILER CONNECT	1
10	0301959	SNAP RING-INTERNAL 1-1/2	4
11	0302205	GAUGE, FLUSH MNTG-6000 PSI	4
12	0302534	FITTING, 45 DEG ELBOW	2
13	0302698	FITTING, HOSE BARB,1-1/4	2
14	0302901	HOSE HYD, 120" 12C12	2
15	0303538	FITT, ADAPTER -BRASS 8FP-6MP	1
16	0303539	QUICK DISCONNECT 3/8 FPT	1
17	0303948	ELBOW, 12MJ-16MB90	2
18	0304363	QUICK DISCONNECT 1/2 FPT	2
19	0306539	HOSE BARB 20HOSE16MB90	2
20	0306983	FITT-MALE RUNTEE 1/4T-1/4NPT	1
21	0307216	LIGHT, AMBER LED RECT 5.25X3.3	2
22	0307538	LIGHT, MRKR-RED LED 4.5 X 1.63	4
23	0307604	KNOB, RED LONG - SK0700-07	4
24	0307778	PLUG, FILLER	2
25	0310010	SUCTION HOSE,1-1/4ID X50 100R4	1
26	0311014	2010 VULC ALUM BODY 160CB LH	1
27	0311015	2010 VULC ALUM BODY 160CB RH	1
28	0311355	HOBBS HOURMETER	1
29	0311502	LIGHT 6" OVAL CLEAR-AMBER LED	6
30	0311503	GROMMET, LIGHT 6" OVAL	6
31	0311508	LIGHT RECT CLEAR-RED LED	4
32	0311510	LIGHT RECT REVERSE W/REFLEX	2
33	0311511	GROMMET, TAIL LIGHT, RECTANGULAR	8
34	0311755	WATER SEPARATOR-MONNIER	1
35	04000381	SS BHSCS 1/4-20 X 1	16
36	0400070	SCREW, 1/4-20X1 HHC GR5	6
37	0400107	SCREW, 5/16-18X2-1/2 HHC GR5	2
38	0400128	SCREW, 3/8-16X1-1/4 FHS GR8 BO	24
39	0400369	NUT, 1/4 SPR J	8
40	0400393	NUT, 3/8-16 JAM	16
41	0400451	WASHER, 1/4	6
42	0400454	WASHER, 1/4 SS	22
43	0400491	LKWASHER, 1/2	14
44	0400498	WASHER, 1/2X2X0.125	14
45	0400687	SCREW, 10-24X3/4 PRH SS	4

ITEM	PART NUMBER	DESCRIPTION	QTY
46	0400776	NUT, 5/16-18 JAM LOK	2
47	0400816	WASHER, M10 SS	4
48	0401054	SCREW, 8-32X3/4 PRH SS	12
49	0402002	NUT, 8-32 LOK EXT SS	12
50	0402020	SCREW, 1/4-20X3/4 HHC SS	2
51	0402021	SCREW, 1/4-20X1 HHC SS	2
52	0402043	SCREW, 3/8-16X1-1/4 HHC SS	8
53	0402111	LKWASHER, 1/4 SS	18
54	0402113	NUT, 1/4-20 LOK SS	2
55	0402120	WASHER, 3/8 SS	16
56	0402121	LKWASHER, 3/8 SS	8
57	0402122	NUT, 3/8-16 HEX SS	8
58	0719585	D-RING, TOWING	2
59	0724476	PAD - NYLATRON - BBOM GUIDE	4
60	0724500	PIN - LOWER JACK LEG CYL	2
61	0726593	APNL-DCV LWR CTL PNL, 3 WINCH	2
62	0726594	APNL-DCV UPR LH CTL PNL, 3WNCH	1
63	0726595	APNL-DCV UPR RH CTL PNL, 3WNCH	1
64	0807947	LH JACK LEG WELD'T - STANDARD	1
65	0807948	RH JACK LEG WELD'T - STANDARD	1
66	0910787	STINGER ASSY - EURO - 144"	1
67	0911010	RECOVERY BOOM INSTALL V-70	1
68	0911804	AIR REGULATOR-GAUGE ASSEMBLY	2
69	0912015	SUBFRAME ASSY V70-100 STDWINCH	1
70	9010520	FITTING-ELBOW 1/4T-1/4NPT	2
71	9011053	FITTING, BRASS 1/4 TUBE-1/4 MP	1
72	9016815	MUNCIE PUMP TSPKS17-17-2BSSB	1
73	9024041	SWITCH, ROCKER SPST RED 12V21A	11
74	9041403	1/2 NC X 1 1/2 HHCS PL GR8	14
75	916770001	HOSE- HYD. 3/8 - 105" 8MJ-6MFA	2
76	920400005	MUD FLAP BRACE PLATE	2
77	9402970	TOOLBOX MTG. PAD	14
78	942480011	PLATE,SLOT-SS REAR WASHER TBOX	14
79	942480300	MTG ANGLE WELD'T LH - DCV COV.	2
80	942487300	MTG ANGLE WELD'T RH - DCV COV.	2
81	94320052	MUD FLAP 920-940 RUBBER	2
82	945770002	6AT2(6T90S-8MJ) HCL 48	2
83	945770003	6AT2(6T90L-8MJ) 24 HYD	4
84	946210500	TUBE, FRONT MTG WELD'T	1
85	946770003	HOSE ASSEMBLY - 8MJ-8MJ X 45	4
86	946770006	HOSE ASSEMBLY - 62	2
87	946770007	HOSE ASSEMBLY - 79	2
88	946770009	HOSE ASSEMBLY - 104	4
89	948570000	5X5 LIFT BAR ASSEMBLY 948 XHD	1
90	GA0215	PIN-"D" RING	2

09008488, BUA V70 2-WINCH STD JACK LEG (cont'd)

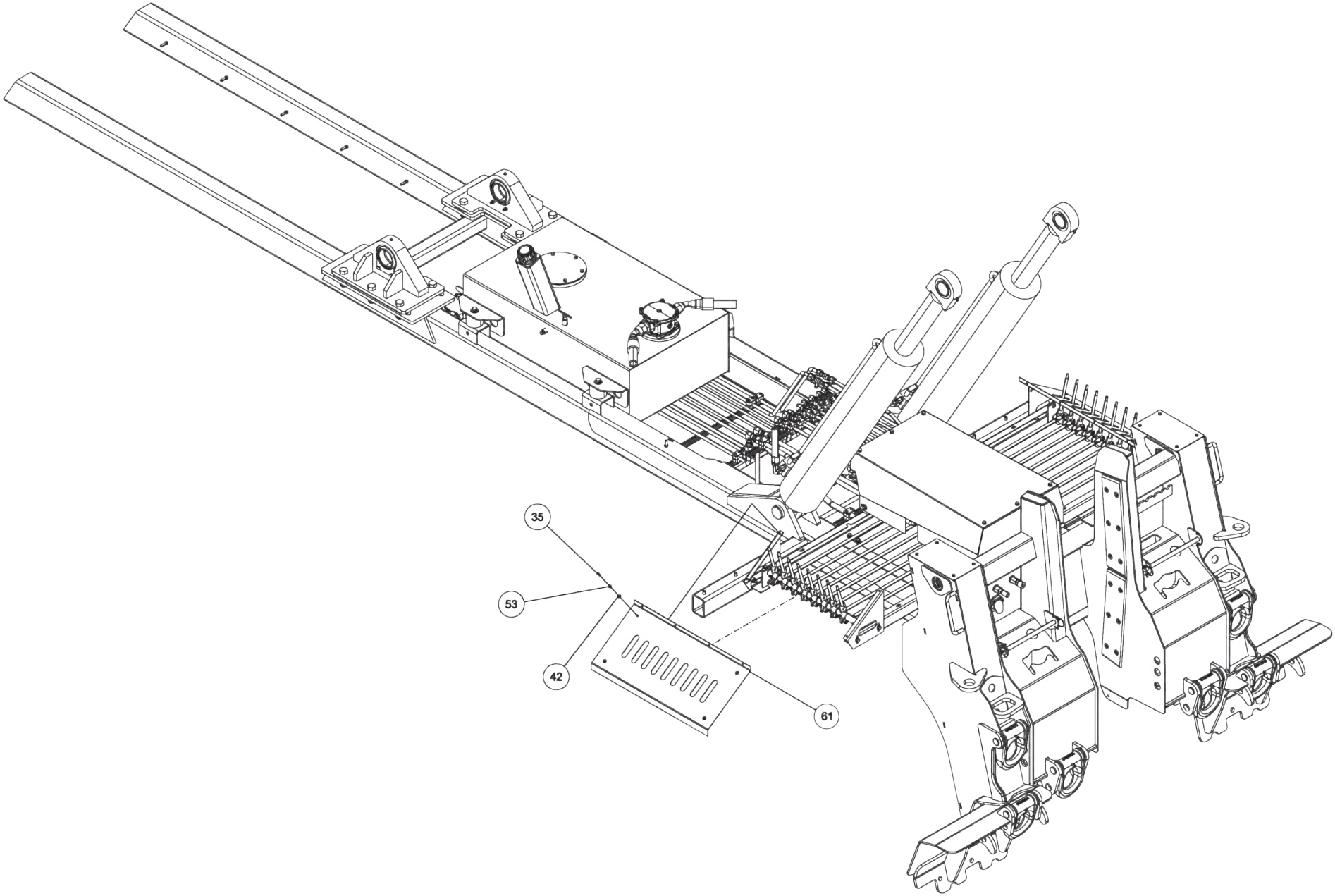

09008488, BUA V70 2-WINCH STD JACK LEG (cont'd)

ITEM	PART NUMBER	DESCRIPTION	QTY
	09008488	BUA V70 2W STD JL	
1	0300341	KNOB, BLACK (BLANK)	12
2	0300364	CLAMP-HOSE,0.875"-2.75" 50"LBS	8
3	0301473	HOSE HYD, 18" LG	4
4	0301696	FITTING, ELB 90 DEG 6MJ-6FJX90	4
5	0301895	GREASE FITTING, 1/8 STR PTF	2
6	0301909	RECEPTACLE BOOT	1
7	0301946	FITTING, BLKHD CONNECT	3
8	0301947	FITTING, 45 DEG ADAPTER	1
9	0301948	HD 7 WAY TRAILER CONNECT	1
10	0301959	SNAP RING-INTERNAL 1-1/2	4
11	0302205	GAUGE, FLUSH MNTG-6000 PSI	4
12	0302534	FITTING, 45 DEG ELBOW	2
13	0302698	FITTING, HOSE BARB,1-1/4	2
14	0302901	HOSE HYD, 120" 12C12	2
15	0303538	FITT, ADAPTER -BRASS 8FP-6MP	1
16	0303539	QUICK DISCONNECT 3/8 FPT	1
17	0303948	ELBOW, 12MJ-16MB90	2
18	0304363	QUICK DISCONNECT 1/2 FPT	2
19	0306539	HOSE BARB 20HOSE16MB90	2
20	0306983	FITT-MALE RUNTEE 1/4T-1/4NPT	1
21	0307216	LIGHT, AMBER LED RECT 5.25X3.3	2
22	0307538	LIGHT, MRKR-RED LED 4.5 X 1.63	4
23	0307604	KNOB, RED LONG - SK0700-07	4
24	0307778	PLUG, FILLER	2
25	0310010	SUCTION HOSE,1-1/4ID X50 100R4	1
26	0311014	2010 VULC ALUM BODY 160CB LH	1
27	0311015	2010 VULC ALUM BODY 160CB RH	1
28	0311355	HOBBS HOURMETER	1
29	0311502	LIGHT 6" OVAL CLEAR-AMBER LED	6
30	0311503	GROMMET, LIGHT 6" OVAL	6
31	0311508	LIGHT RECT CLEAR-RED LED	4
32	0311510	LIGHT RECT REVERSE W/REFLEX	2
33	0311511	GROMMET, TAIL LIGHT, RECTANGULAR	8
34	0311755	WATER SEPARATOR-MONNIER	1
35	04000381	SS BHSCS 1/4-20 X 1	16
36	0400070	SCREW, 1/4-20X1 HHC GR5	6
37	0400107	SCREW, 5/16-18X2-1/2 HHC GR5	2
38	0400128	SCREW, 3/8-16X1-1/4 FHS GR8 BO	24
39	0400369	NUT, 1/4 SPR J	8
40	0400393	NUT, 3/8-16 JAM	16
41	0400451	WASHER, 1/4	6
42	0400454	WASHER, 1/4 SS	22
43	0400491	LKWASHER, 1/2	14
44	0400498	WASHER, 1/2X2X0.125	14
45	0400687	SCREW, 10-24X3/4 PRH SS	4

ITEM	PART NUMBER	DESCRIPTION	QTY
46	0400776	NUT, 5/16-18 JAM LOK	2
47	0400816	WASHER, M10 SS	4
48	0401054	SCREW, 8-32X3/4 PRH SS	12
49	0402002	NUT, 8-32 LOK EXT SS	12
50	0402020	SCREW, 1/4-20X3/4 HHC SS	2
51	0402021	SCREW, 1/4-20X1 HHC SS	2
52	0402043	SCREW, 3/8-16X1-1/4 HHC SS	8
53	0402111	LKWASHER, 1/4 SS	18
54	0402113	NUT, 1/4-20 LOK SS	2
55	0402120	WASHER, 3/8 SS	16
56	0402121	LKWASHER, 3/8 SS	8
57	0402122	NUT, 3/8-16 HEX SS	8
58	0719585	D-RING, TOWING	2
59	0724476	PAD - NYLATRON - BBOM GUIDE	4
60	0724500	PIN - LOWER JACK LEG CYL	2
61	0726593	APNL-DCV LWR CTL PNL, 3 WINCH	2
62	0726594	APNL-DCV UPR LH CTL PNL, 3WNCH	1
63	0726595	APNL-DCV UPR RH CTL PNL, 3WNCH	1
64	0807947	LH JACK LEG WELD'T - STANDARD	1
65	0807948	RH JACK LEG WELD'T - STANDARD	1
66	0910787	STINGER ASSY - EURO - 144"	1
67	0911010	RECOVERY BOOM INSTALL V-70	1
68	0911804	AIR REGULATOR-GAUGE ASSEMBLY	2
69	0912015	SUBFRAME ASSY V70-100 STDWINCH	1
70	9010520	FITTING-ELBOW 1/4T-1/4NPT	2
71	9011053	FITTING, BRASS 1/4 TUBE-1/4 MP	1
72	9016815	MUNCIE PUMP TSPKS17-17-2BSSB	1
73	9024041	SWITCH, ROCKER SPST RED 12V21A	11
74	9041403	1/2 NC X 1 1/2 HHCS PL GR8	14
75	916770001	HOSE- HYD. 3/8 - 105" 8MJ-6MFA	2
76	920400005	MUD FLAP BRACE PLATE	2
77	9402970	TOOLBOX MTG. PAD	14
78	942480011	PLATE,SLOT-SS REAR WASHER TBOX	14
79	942480300	MTG ANGLE WELD'T LH - DCV COV.	2
80	942487300	MTG ANGLE WELD'T RH - DCV COV.	2
81	94320052	MUD FLAP 920-940 RUBBER	2
82	945770002	6AT2(6T90S-8MJ) HCL 48	2
83	945770003	6AT2(6T90L-8MJ) 24 HYD	4
84	946210500	TUBE, FRONT MTG WELD'T	1
85	946770003	HOSE ASSEMBLY - 8MJ-8MJ X 45	4
86	946770006	HOSE ASSEMBLY - 62	2
87	946770007	HOSE ASSEMBLY - 79	2
88	946770009	HOSE ASSEMBLY - 104	4
89	948570000	5X5 LIFT BAR ASSEMBLY 948 XHD	1
90	GA0215	PIN-"D" RING	2

09008488, BUA V70 2-WINCH STD JACK LEG (cont'd)

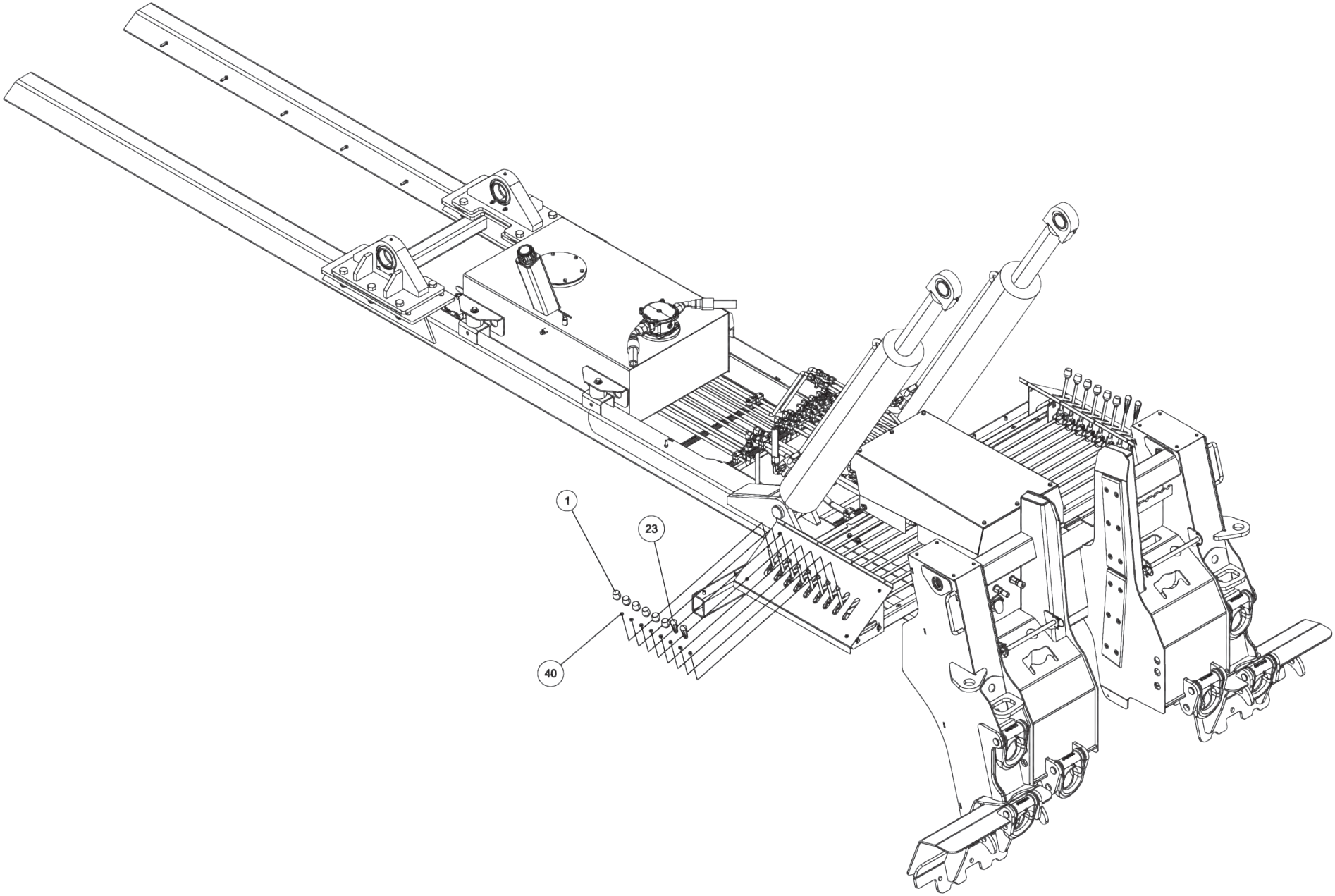

09008488, BUA V70 2-WINCH STD JACK LEG (cont'd)

ITEM	PART NUMBER	DESCRIPTION	QTY
	09008488	BUA V70 2W STD JL	
1	0300341	KNOB, BLACK (BLANK)	12
2	0300364	CLAMP-HOSE,0.875"-2.75" 50"LBS	8
3	0301473	HOSE HYD, 18" LG	4
4	0301696	FITTING, ELB 90 DEG 6MJ-6FJX90	4
5	0301895	GREASE FITTING, 1/8 STR PTF	2
6	0301909	RECEPTACLE BOOT	1
7	0301946	FITTING, BLKHD CONNECT	3
8	0301947	FITTING, 45 DEG ADAPTER	1
9	0301948	HD 7 WAY TRAILER CONNECT	1
10	0301959	SNAP RING-INTERNAL 1-1/2	4
11	0302205	GAUGE, FLUSH MNTG-6000 PSI	4
12	0302534	FITTING, 45 DEG ELBOW	2
13	0302698	FITTING, HOSE BARB,1-1/4	2
14	0302901	HOSE HYD, 120" 12C12	2
15	0303538	FITT, ADAPTER -BRASS 8FP-6MP	1
16	0303539	QUICK DISCONNECT 3/8 FPT	1
17	0303948	ELBOW, 12MJ-16MB90	2
18	0304363	QUICK DISCONNECT 1/2 FPT	2
19	0306539	HOSE BARB 20HOSE16MB90	2
20	0306983	FITT-MALE RUNTEE 1/4T-1/4NPT	1
21	0307216	LIGHT, AMBER LED RECT 5.25X3.3	2
22	0307538	LIGHT, MRKR-RED LED 4.5 X 1.63	4
23	0307604	KNOB, RED LONG - SK0700-07	4
24	0307778	PLUG, FILLER	2
25	0310010	SUCTION HOSE,1-1/4ID X50 100R4	1
26	0311014	2010 VULC ALUM BODY 160CB LH	1
27	0311015	2010 VULC ALUM BODY 160CB RH	1
28	0311355	HOBBS HOURMETER	1
29	0311502	LIGHT 6" OVAL CLEAR-AMBER LED	6
30	0311503	GROMMET, LIGHT 6" OVAL	6
31	0311508	LIGHT RECT CLEAR-RED LED	4
32	0311510	LIGHT RECT REVERSE W/REFLEX	2
33	0311511	GROMMET, TAIL LIGHT, RECTANGULAR	8
34	0311755	WATER SEPARATOR-MONNIER	1
35	04000381	SS BHSCS 1/4-20 X 1	16
36	0400070	SCREW, 1/4-20X1 HHC GR5	6
37	0400107	SCREW, 5/16-18X2-1/2 HHC GR5	2
38	0400128	SCREW, 3/8-16X1-1/4 FHS GR8 BO	24
39	0400369	NUT, 1/4 SPR J	8
40	0400393	NUT, 3/8-16 JAM	16
41	0400451	WASHER, 1/4	6
42	0400454	WASHER, 1/4 SS	22
43	0400491	LKWASHER, 1/2	14
44	0400498	WASHER, 1/2X2X0.125	14
45	0400687	SCREW, 10-24X3/4 PRH SS	4

ITEM	PART NUMBER	DESCRIPTION	QTY
46	0400776	NUT, 5/16-18 JAM LOK	2
47	0400816	WASHER, M10 SS	4
48	0401054	SCREW, 8-32X3/4 PRH SS	12
49	0402002	NUT, 8-32 LOK EXT SS	12
50	0402020	SCREW, 1/4-20X3/4 HHC SS	2
51	0402021	SCREW, 1/4-20X1 HHC SS	2
52	0402043	SCREW, 3/8-16X1-1/4 HHC SS	8
53	0402111	LKWASHER, 1/4 SS	18
54	0402113	NUT, 1/4-20 LOK SS	2
55	0402120	WASHER, 3/8 SS	16
56	0402121	LKWASHER, 3/8 SS	8
57	0402122	NUT, 3/8-16 HEX SS	8
58	0719585	D-RING, TOWING	2
59	0724476	PAD - NYLATRON - BBOM GUIDE	4
60	0724500	PIN - LOWER JACK LEG CYL	2
61	0726593	APNL-DCV LWR CTL PNL, 3 WINCH	2
62	0726594	APNL-DCV UPR LH CTL PNL, 3WNCH	1
63	0726595	APNL-DCV UPR RH CTL PNL, 3WNCH	1
64	0807947	LH JACK LEG WELD'T - STANDARD	1
65	0807948	RH JACK LEG WELD'T - STANDARD	1
66	0910787	STINGER ASSY - EURO - 144"	1
67	0911010	RECOVERY BOOM INSTALL V-70	1
68	0911804	AIR REGULATOR-GAUGE ASSEMBLY	2
69	0912015	SUBFRAME ASSY V70-100 STDWINCH	1
70	9010520	FITTING-ELBOW 1/4T-1/4NPT	2
71	9011053	FITTING, BRASS 1/4 TUBE-1/4 MP	1
72	9016815	MUNCIE PUMP TSPKS17-17-2BSSB	1
73	9024041	SWITCH, ROCKER SPST RED 12V21A	11
74	9041403	1/2 NC X 1 1/2 HHCS PL GR8	14
75	916770001	HOSE- HYD. 3/8 - 105" 8MJ-6MFA	2
76	920400005	MUD FLAP BRACE PLATE	2
77	9402970	TOOLBOX MTG. PAD	14
78	942480011	PLATE,SLOT-SS REAR WASHER TBOX	14
79	942480300	MTG ANGLE WELD'T LH - DCV COV.	2
80	942487300	MTG ANGLE WELD'T RH - DCV COV.	2
81	94320052	MUD FLAP 920-940 RUBBER	2
82	945770002	6AT2(6T90S-8MJ) HCL 48	2
83	945770003	6AT2(6T90L-8MJ) 24 HYD	4
84	946210500	TUBE, FRONT MTG WELD'T	1
85	946770003	HOSE ASSEMBLY - 8MJ-8MJ X 45	4
86	946770006	HOSE ASSEMBLY - 62	2
87	946770007	HOSE ASSEMBLY - 79	2
88	946770009	HOSE ASSEMBLY - 104	4
89	948570000	5X5 LIFT BAR ASSEMBLY 948 XHD	1
90	GA0215	PIN-"D" RING	2

09008488, BUA V70 2-WINCH STD JACK LEG (cont'd)

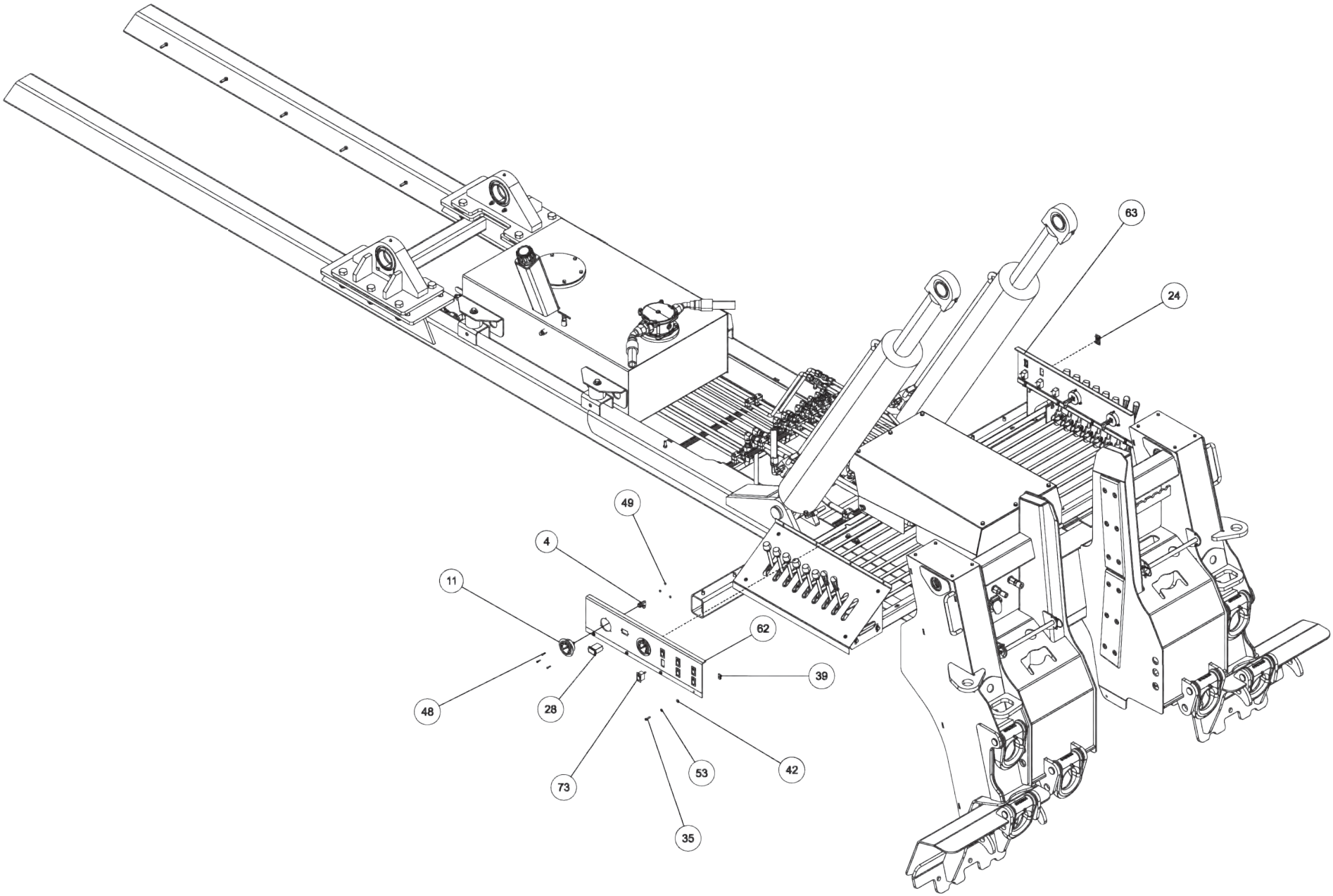

09008488, BUA V70 2-WINCH STD JACK LEG (cont'd)

ITEM	PART NUMBER	DESCRIPTION	QTY
	09008488	BUA V70 2W STD JL	
1	0300341	KNOB, BLACK (BLANK)	12
2	0300364	CLAMP-HOSE,0.875"-2.75" 50"LBS	8
3	0301473	HOSE HYD, 18" LG	4
4	0301696	FITTING, ELB 90 DEG 6MJ-6FJX90	4
5	0301895	GREASE FITTING, 1/8 STR PTF	2
6	0301909	RECEPTACLE BOOT	1
7	0301946	FITTING, BLKHD CONNECT	3
8	0301947	FITTING, 45 DEG ADAPTER	1
9	0301948	HD 7 WAY TRAILER CONNECT	1
10	0301959	SNAP RING-INTERNAL 1-1/2	4
11	0302205	GAUGE, FLUSH MNTG-6000 PSI	4
12	0302534	FITTING, 45 DEG ELBOW	2
13	0302698	FITTING, HOSE BARB,1-1/4	2
14	0302901	HOSE HYD, 120" 12C12	2
15	0303538	FITT, ADAPTER -BRASS 8FP-6MP	1
16	0303539	QUICK DISCONNECT 3/8 FPT	1
17	0303948	ELBOW, 12MJ-16MB90	2
18	0304363	QUICK DISCONNECT 1/2 FPT	2
19	0306539	HOSE BARB 20HOSE16MB90	2
20	0306983	FITT-MALE RUNTEE 1/4T-1/4NPT	1
21	0307216	LIGHT, AMBER LED RECT 5.25X3.3	2
22	0307538	LIGHT, MRKR-RED LED 4.5 X 1.63	4
23	0307604	KNOB, RED LONG - SK0700-07	4
24	0307778	PLUG, FILLER	2
25	0310010	SUCTION HOSE,1-1/4ID X50 100R4	1
26	0311014	2010 VULC ALUM BODY 160CB LH	1
27	0311015	2010 VULC ALUM BODY 160CB RH	1
28	0311355	HOBBS HOURMETER	1
29	0311502	LIGHT 6" OVAL CLEAR-AMBER LED	6
30	0311503	GROMMET, LIGHT 6" OVAL	6
31	0311508	LIGHT RECT CLEAR-RED LED	4
32	0311510	LIGHT RECT REVERSE W/REFLEX	2
33	0311511	GROMMET, TAIL LIGHT, RECTANGULAR	8
34	0311755	WATER SEPARATOR-MONNIER	1
35	04000381	SS BHSCS 1/4-20 X 1	16
36	0400070	SCREW, 1/4-20X1 HHC GR5	6
37	0400107	SCREW, 5/16-18X2-1/2 HHC GR5	2
38	0400128	SCREW, 3/8-16X1-1/4 FHS GR8 BO	24
39	0400369	NUT, 1/4 SPR J	8
40	0400393	NUT, 3/8-16 JAM	16
41	0400451	WASHER, 1/4	6
42	0400454	WASHER, 1/4 SS	22
43	0400491	LKWASHER, 1/2	14
44	0400498	WASHER, 1/2X2X0.125	14
45	0400687	SCREW, 10-24X3/4 PRH SS	4

ITEM	PART NUMBER	DESCRIPTION	QTY
46	0400776	NUT, 5/16-18 JAM LOK	2
47	0400816	WASHER, M10 SS	4
48	0401054	SCREW, 8-32X3/4 PRH SS	12
49	0402002	NUT, 8-32 LOK EXT SS	12
50	0402020	SCREW, 1/4-20X3/4 HHC SS	2
51	0402021	SCREW, 1/4-20X1 HHC SS	2
52	0402043	SCREW, 3/8-16X1-1/4 HHC SS	8
53	0402111	LKWASHER, 1/4 SS	18
54	0402113	NUT, 1/4-20 LOK SS	2
55	0402120	WASHER, 3/8 SS	16
56	0402121	LKWASHER, 3/8 SS	8
57	0402122	NUT, 3/8-16 HEX SS	8
58	0719585	D-RING, TOWING	2
59	0724476	PAD - NYLATRON - BBOM GUIDE	4
60	0724500	PIN - LOWER JACK LEG CYL	2
61	0726593	APNL-DCV LWR CTL PNL, 3 WINCH	2
62	0726594	APNL-DCV UPR LH CTL PNL, 3WNCH	1
63	0726595	APNL-DCV UPR RH CTL PNL, 3WNCH	1
64	0807947	LH JACK LEG WELD'T - STANDARD	1
65	0807948	RH JACK LEG WELD'T - STANDARD	1
66	0910787	STINGER ASSY - EURO - 144"	1
67	0911010	RECOVERY BOOM INSTALL V-70	1
68	0911804	AIR REGULATOR-GAUGE ASSEMBLY	2
69	0912015	SUBFRAME ASSY V70-100 STDWINCH	1
70	9010520	FITTING-ELBOW 1/4T-1/4NPT	2
71	9011053	FITTING, BRASS 1/4 TUBE-1/4 MP	1
72	9016815	MUNCIE PUMP TSPKS17-17-2BSSB	1
73	9024041	SWITCH, ROCKER SPST RED 12V21A	11
74	9041403	1/2 NC X 1 1/2 HHCS PL GR8	14
75	916770001	HOSE- HYD. 3/8 - 105" 8MJ-6MFA	2
76	920400005	MUD FLAP BRACE PLATE	2
77	9402970	TOOLBOX MTG. PAD	14
78	942480011	PLATE,SLOT-SS REAR WASHER TBOX	14
79	942480300	MTG ANGLE WELD'T LH - DCV COV.	2
80	942487300	MTG ANGLE WELD'T RH - DCV COV.	2
81	94320052	MUD FLAP 920-940 RUBBER	2
82	945770002	6AT2(6T90S-8MJ) HCL 48	2
83	945770003	6AT2(6T90L-8MJ) 24 HYD	4
84	946210500	TUBE, FRONT MTG WELD'T	1
85	946770003	HOSE ASSEMBLY - 8MJ-8MJ X 45	4
86	946770006	HOSE ASSEMBLY - 62	2
87	946770007	HOSE ASSEMBLY - 79	2
88	946770009	HOSE ASSEMBLY - 104	4
89	948570000	5X5 LIFT BAR ASSEMBLY 948 XHD	1
90	GA0215	PIN-"D" RING	2

09008488, BUA V70 2-WINCH STD JACK LEG (cont'd)

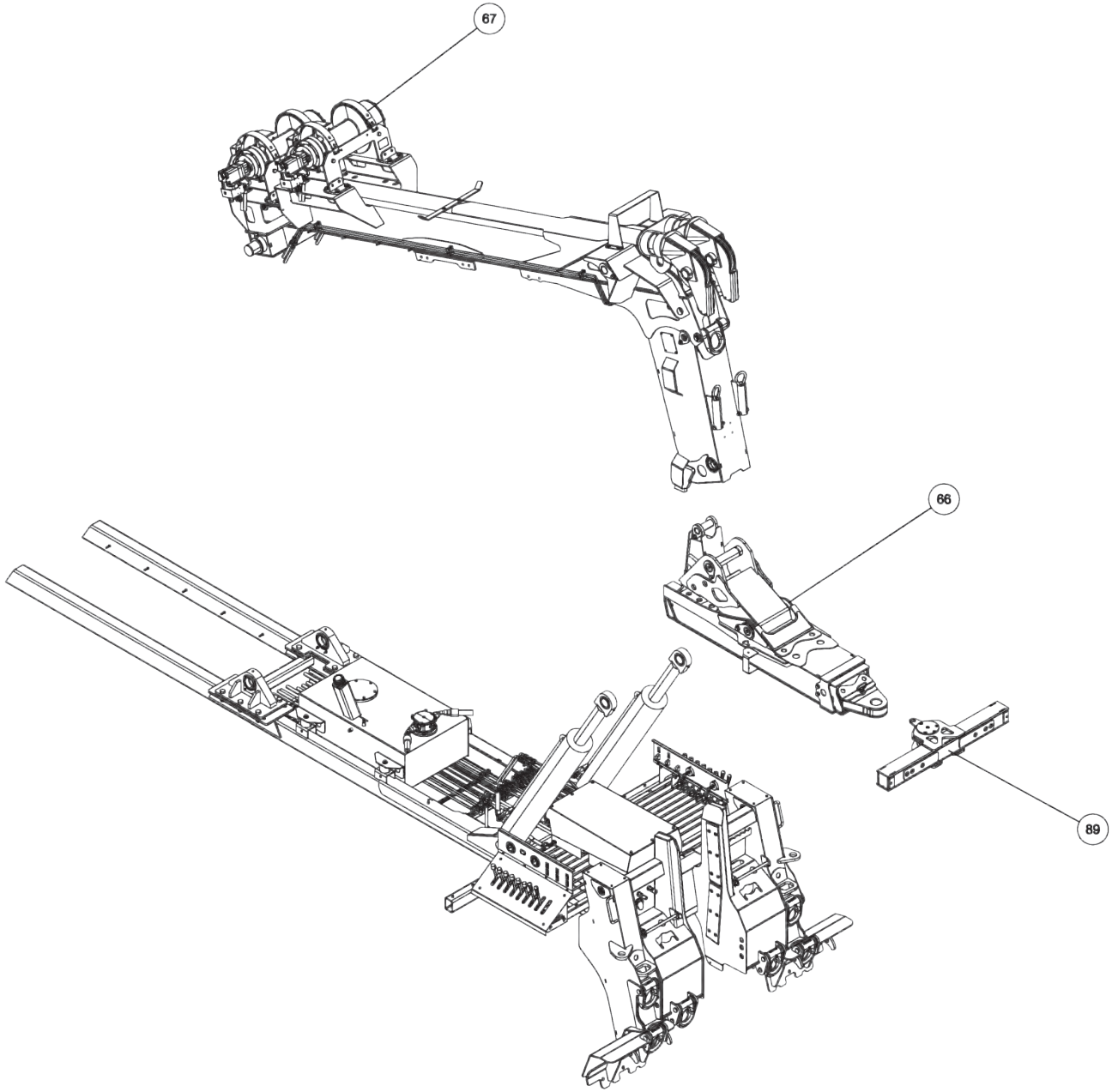

09008488, BUA V70 2-WINCH STD JACK LEG (cont'd)

ITEM	PART NUMBER	DESCRIPTION	QTY
	09008488	BUA V70 2W STD JL	
1	0300341	KNOB, BLACK (BLANK)	12
2	0300364	CLAMP-HOSE,0.875"-2.75" 50"LBS	8
3	0301473	HOSE HYD, 18" LG	4
4	0301696	FITTING, ELB 90 DEG 6MJ-6FJX90	4
5	0301895	GREASE FITTING, 1/8 STR PTF	2
6	0301909	RECEPTACLE BOOT	1
7	0301946	FITTING, BLKHD CONNECT	3
8	0301947	FITTING, 45 DEG ADAPTER	1
9	0301948	HD 7 WAY TRAILER CONNECT	1
10	0301959	SNAP RING-INTERNAL 1-1/2	4
11	0302205	GAUGE, FLUSH MNTG-6000 PSI	4
12	0302534	FITTING, 45 DEG ELBOW	2
13	0302698	FITTING, HOSE BARB,1-1/4	2
14	0302901	HOSE HYD, 120" 12C12	2
15	0303538	FITT, ADAPTER -BRASS 8FP-6MP	1
16	0303539	QUICK DISCONNECT 3/8 FPT	1
17	0303948	ELBOW, 12MJ-16MB90	2
18	0304363	QUICK DISCONNECT 1/2 FPT	2
19	0306539	HOSE BARB 20HOSE16MB90	2
20	0306983	FITT-MALE RUNTEE 1/4T-1/4NPT	1
21	0307216	LIGHT, AMBER LED RECT 5.25X3.3	2
22	0307538	LIGHT, MRKR-RED LED 4.5 X 1.63	4
23	0307604	KNOB, RED LONG - SK0700-07	4
24	0307778	PLUG, FILLER	2
25	0310010	SUCTION HOSE,1-1/4ID X50 100R4	1
26	0311014	2010 VULC ALUM BODY 160CB LH	1
27	0311015	2010 VULC ALUM BODY 160CB RH	1
28	0311355	HOBBS HOURMETER	1
29	0311502	LIGHT 6" OVAL CLEAR-AMBER LED	6
30	0311503	GROMMET, LIGHT 6" OVAL	6
31	0311508	LIGHT RECT CLEAR-RED LED	4
32	0311510	LIGHT RECT REVERSE W/REFLEX	2
33	0311511	GROMMET, TAIL LIGHT, RECTANGULAR	8
34	0311755	WATER SEPARATOR-MONNIER	1
35	04000381	SS BHSCS 1/4-20 X 1	16
36	0400070	SCREW, 1/4-20X1 HHC GR5	6
37	0400107	SCREW, 5/16-18X2-1/2 HHC GR5	2
38	0400128	SCREW, 3/8-16X1-1/4 FHS GR8 BO	24
39	0400369	NUT, 1/4 SPR J	8
40	0400393	NUT, 3/8-16 JAM	16
41	0400451	WASHER, 1/4	6
42	0400454	WASHER, 1/4 SS	22
43	0400491	LKWASHER, 1/2	14
44	0400498	WASHER, 1/2X2X0.125	14
45	0400687	SCREW, 10-24X3/4 PRH SS	4

ITEM	PART NUMBER	DESCRIPTION	QTY
46	0400776	NUT, 5/16-18 JAM LOK	2
47	0400816	WASHER, M10 SS	4
48	0401054	SCREW, 8-32X3/4 PRH SS	12
49	0402002	NUT, 8-32 LOK EXT SS	12
50	0402020	SCREW, 1/4-20X3/4 HHC SS	2
51	0402021	SCREW, 1/4-20X1 HHC SS	2
52	0402043	SCREW, 3/8-16X1-1/4 HHC SS	8
53	0402111	LKWASHER, 1/4 SS	18
54	0402113	NUT, 1/4-20 LOK SS	2
55	0402120	WASHER, 3/8 SS	16
56	0402121	LKWASHER, 3/8 SS	8
57	0402122	NUT, 3/8-16 HEX SS	8
58	0719585	D-RING, TOWING	2
59	0724476	PAD - NYLATRON - BBOM GUIDE	4
60	0724500	PIN - LOWER JACK LEG CYL	2
61	0726593	APNL-DCV LWR CTL PNL, 3 WINCH	2
62	0726594	APNL-DCV UPR LH CTL PNL, 3WNCH	1
63	0726595	APNL-DCV UPR RH CTL PNL, 3WNCH	1
64	0807947	LH JACK LEG WELD'T - STANDARD	1
65	0807948	RH JACK LEG WELD'T - STANDARD	1
66	0910787	STINGER ASSY - EURO - 144"	1
67	0911010	RECOVERY BOOM INSTALL V-70	1
68	0911804	AIR REGULATOR-GAUGE ASSEMBLY	2
69	0912015	SUBFRAME ASSY V70-100 STDWINCH	1
70	9010520	FITTING-ELBOW 1/4T-1/4NPT	2
71	9011053	FITTING, BRASS 1/4 TUBE-1/4 MP	1
72	9016815	MUNCIE PUMP TSPKS17-17-2BSSB	1
73	9024041	SWITCH, ROCKER SPST RED 12V21A	11
74	9041403	1/2 NC X 1 1/2 HHCS PL GR8	14
75	916770001	HOSE- HYD. 3/8 - 105" 8MJ-6MFA	2
76	920400005	MUD FLAP BRACE PLATE	2
77	9402970	TOOLBOX MTG. PAD	14
78	942480011	PLATE,SLOT-SS REAR WASHER TBOX	14
79	942480300	MTG ANGLE WELD'T LH - DCV COV.	2
80	942487300	MTG ANGLE WELD'T RH - DCV COV.	2
81	94320052	MUD FLAP 920-940 RUBBER	2
82	945770002	6AT2(6T90S-8MJ) HCL 48	2
83	945770003	6AT2(6T90L-8MJ) 24 HYD	4
84	946210500	TUBE, FRONT MTG WELD'T	1
85	946770003	HOSE ASSEMBLY - 8MJ-8MJ X 45	4
86	946770006	HOSE ASSEMBLY - 62	2
87	946770007	HOSE ASSEMBLY - 79	2
88	946770009	HOSE ASSEMBLY - 104	4
89	948570000	5X5 LIFT BAR ASSEMBLY 948 XHD	1
90	GA0215	PIN-"D" RING	2

09008488, BUA V70 2-WINCH STD JACK LEG (cont'd)

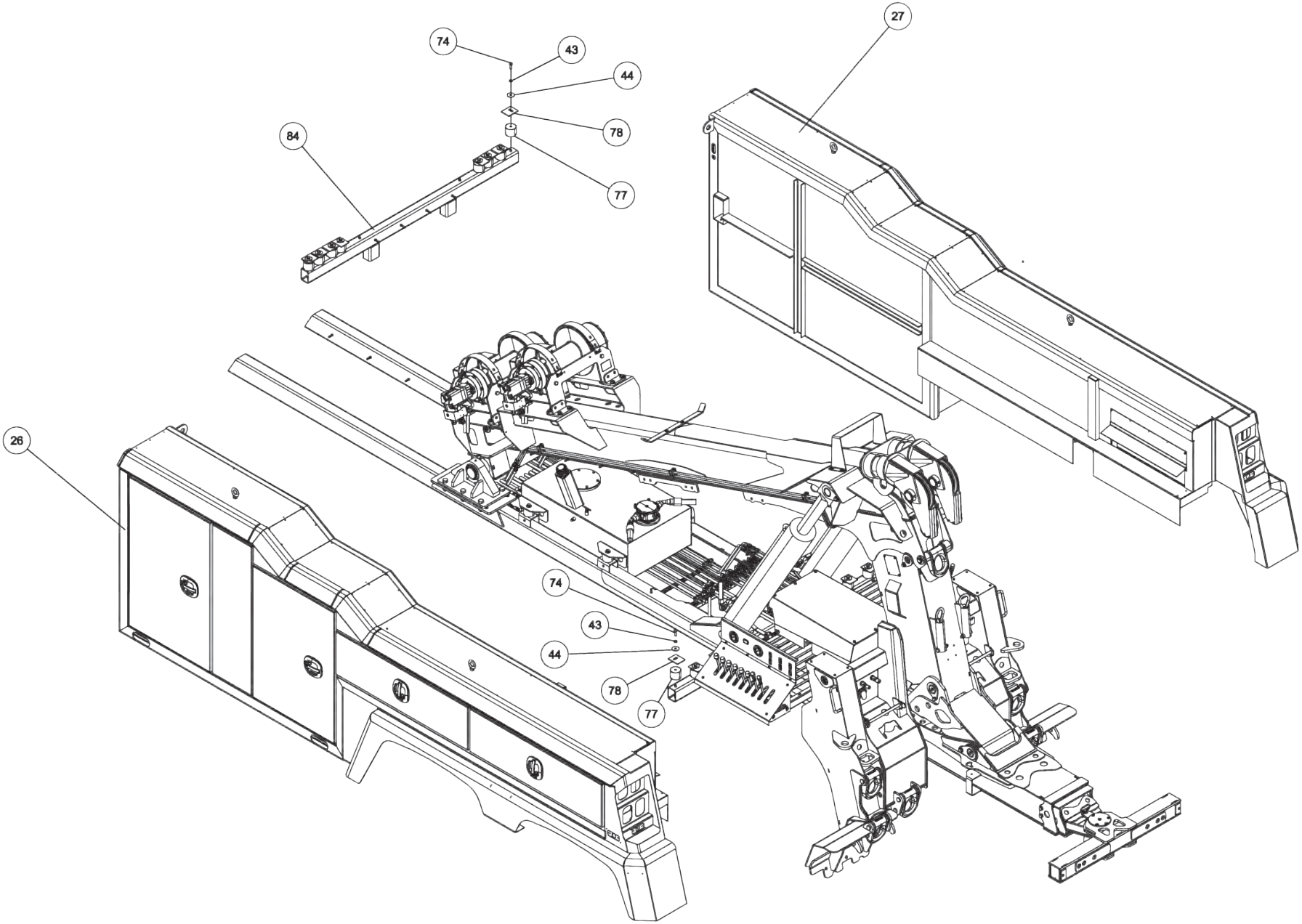

09008488, BUA V70 2-WINCH STD JACK LEG (cont'd)

ITEM	PART NUMBER	DESCRIPTION	QTY
	09008488	BUA V70 2W STD JL	
1	0300341	KNOB, BLACK (BLANK)	12
2	0300364	CLAMP-HOSE,0.875"-2.75" 50"LBS	8
3	0301473	HOSE HYD, 18" LG	4
4	0301696	FITTING, ELB 90 DEG 6MJ-6FJX90	4
5	0301895	GREASE FITTING, 1/8 STR PTF	2
6	0301909	RECEPTACLE BOOT	1
7	0301946	FITTING, BLKHD CONNECT	3
8	0301947	FITTING, 45 DEG ADAPTER	1
9	0301948	HD 7 WAY TRAILER CONNECT	1
10	0301959	SNAP RING-INTERNAL 1-1/2	4
11	0302205	GAUGE, FLUSH MNTG-6000 PSI	4
12	0302534	FITTING, 45 DEG ELBOW	2
13	0302698	FITTING, HOSE BARB,1-1/4	2
14	0302901	HOSE HYD, 120" 12C12	2
15	0303538	FITT, ADAPTER -BRASS 8FP-6MP	1
16	0303539	QUICK DISCONNECT 3/8 FPT	1
17	0303948	ELBOW, 12MJ-16MB90	2
18	0304363	QUICK DISCONNECT 1/2 FPT	2
19	0306539	HOSE BARB 20HOSE16MB90	2
20	0306983	FITT-MALE RUNTEE 1/4T-1/4NPT	1
21	0307216	LIGHT, AMBER LED RECT 5.25X3.3	2
22	0307538	LIGHT, MRKR-RED LED 4.5 X 1.63	4
23	0307604	KNOB, RED LONG - SK0700-07	4
24	0307778	PLUG, FILLER	2
25	0310010	SUCTION HOSE,1-1/4ID X50 100R4	1
26	0311014	2010 VULC ALUM BODY 160CB LH	1
27	0311015	2010 VULC ALUM BODY 160CB RH	1
28	0311355	HOBBS HOURMETER	1
29	0311502	LIGHT 6" OVAL CLEAR-AMBER LED	6
30	0311503	GROMMET, LIGHT 6" OVAL	6
31	0311508	LIGHT RECT CLEAR-RED LED	4
32	0311510	LIGHT RECT REVERSE W/REFLEX	2
33	0311511	GROMMET, TAIL LIGHT, RECTANGULAR	8
34	0311755	WATER SEPARATOR-MONNIER	1
35	04000381	SS BHSCS 1/4-20 X 1	16
36	0400070	SCREW, 1/4-20X1 HHC GR5	6
37	0400107	SCREW, 5/16-18X2-1/2 HHC GR5	2
38	0400128	SCREW, 3/8-16X1-1/4 FHS GR8 BO	24
39	0400369	NUT, 1/4 SPR J	8
40	0400393	NUT, 3/8-16 JAM	16
41	0400451	WASHER, 1/4	6
42	0400454	WASHER, 1/4 SS	22
43	0400491	LKWASHER, 1/2	14
44	0400498	WASHER, 1/2X2X0.125	14
45	0400687	SCREW, 10-24X3/4 PRH SS	4

ITEM	PART NUMBER	DESCRIPTION	QTY
46	0400776	NUT, 5/16-18 JAM LOK	2
47	0400816	WASHER, M10 SS	4
48	0401054	SCREW, 8-32X3/4 PRH SS	12
49	0402002	NUT, 8-32 LOK EXT SS	12
50	0402020	SCREW, 1/4-20X3/4 HHC SS	2
51	0402021	SCREW, 1/4-20X1 HHC SS	2
52	0402043	SCREW, 3/8-16X1-1/4 HHC SS	8
53	0402111	LKWASHER, 1/4 SS	18
54	0402113	NUT, 1/4-20 LOK SS	2
55	0402120	WASHER, 3/8 SS	16
56	0402121	LKWASHER, 3/8 SS	8
57	0402122	NUT, 3/8-16 HEX SS	8
58	0719585	D-RING, TOWING	2
59	0724476	PAD - NYLATRON - BBOM GUIDE	4
60	0724500	PIN - LOWER JACK LEG CYL	2
61	0726593	APNL-DCV LWR CTL PNL, 3 WINCH	2
62	0726594	APNL-DCV UPR LH CTL PNL, 3WNCH	1
63	0726595	APNL-DCV UPR RH CTL PNL, 3WNCH	1
64	0807947	LH JACK LEG WELD'T - STANDARD	1
65	0807948	RH JACK LEG WELD'T - STANDARD	1
66	0910787	STINGER ASSY - EURO - 144"	1
67	0911010	RECOVERY BOOM INSTALL V-70	1
68	0911804	AIR REGULATOR-GAUGE ASSEMBLY	2
69	0912015	SUBFRAME ASSY V70-100 STDWINCH	1
70	9010520	FITTING-ELBOW 1/4T-1/4NPT	2
71	9011053	FITTING, BRASS 1/4 TUBE-1/4 MP	1
72	9016815	MUNCIE PUMP TSPKS17-17-2BSSB	1
73	9024041	SWITCH, ROCKER SPST RED 12V21A	11
74	9041403	1/2 NC X 1 1/2 HHCS PL GR8	14
75	916770001	HOSE- HYD. 3/8 - 105" 8MJ-6MFA	2
76	920400005	MUD FLAP BRACE PLATE	2
77	9402970	TOOLBOX MTG. PAD	14
78	942480011	PLATE,SLOT-SS REAR WASHER TBOX	14
79	942480300	MTG ANGLE WELD'T LH - DCV COV.	2
80	942487300	MTG ANGLE WELD'T RH - DCV COV.	2
81	94320052	MUD FLAP 920-940 RUBBER	2
82	945770002	6AT2(6T90S-8MJ) HCL 48	2
83	945770003	6AT2(6T90L-8MJ) 24 HYD	4
84	946210500	TUBE, FRONT MTG WELD'T	1
85	946770003	HOSE ASSEMBLY - 8MJ-8MJ X 45	4
86	946770006	HOSE ASSEMBLY - 62	2
87	946770007	HOSE ASSEMBLY - 79	2
88	946770009	HOSE ASSEMBLY - 104	4
89	948570000	5X5 LIFT BAR ASSEMBLY 948 XHD	1
90	GA0215	PIN-"D" RING	2

09008488, BUA V70 2-WINCH STD JACK LEG (cont'd)

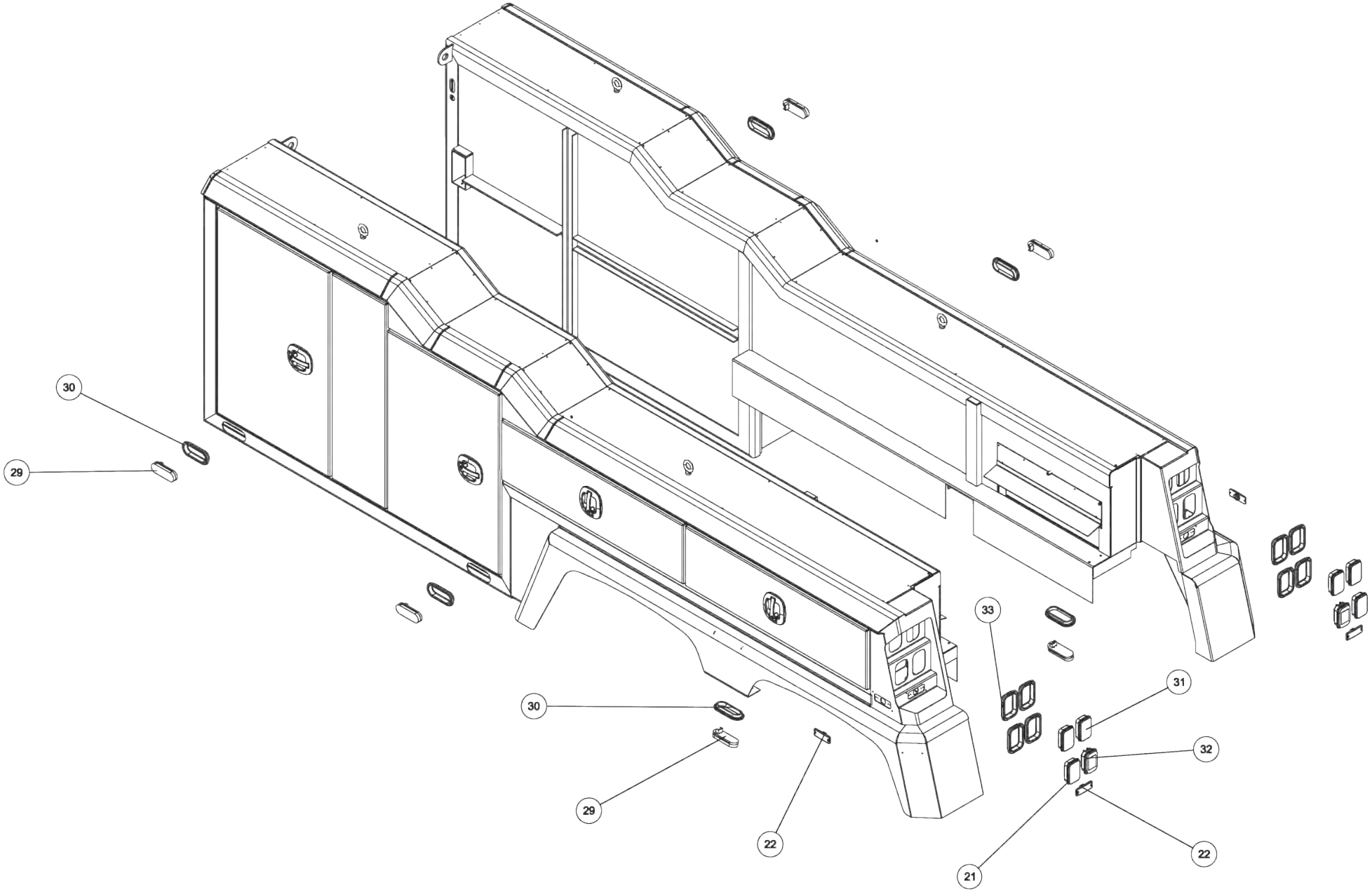

09008488, BUA V70 2-WINCH STD JACK LEG (cont'd)

ITEM	PART NUMBER	DESCRIPTION	QTY
	09008488	BUA V70 2W STD JL	
1	0300341	KNOB, BLACK (BLANK)	12
2	0300364	CLAMP-HOSE,0.875"-2.75" 50"LBS	8
3	0301473	HOSE HYD, 18" LG	4
4	0301696	FITTING, ELB 90 DEG 6MJ-6FJX90	4
5	0301895	GREASE FITTING, 1/8 STR PTF	2
6	0301909	RECEPTACLE BOOT	1
7	0301946	FITTING, BLKHD CONNECT	3
8	0301947	FITTING, 45 DEG ADAPTER	1
9	0301948	HD 7 WAY TRAILER CONNECT	1
10	0301959	SNAP RING-INTERNAL 1-1/2	4
11	0302205	GAUGE, FLUSH MNTG-6000 PSI	4
12	0302534	FITTING, 45 DEG ELBOW	2
13	0302698	FITTING, HOSE BARB,1-1/4	2
14	0302901	HOSE HYD, 120" 12C12	2
15	0303538	FITT, ADAPTER -BRASS 8FP-6MP	1
16	0303539	QUICK DISCONNECT 3/8 FPT	1
17	0303948	ELBOW, 12MJ-16MB90	2
18	0304363	QUICK DISCONNECT 1/2 FPT	2
19	0306539	HOSE BARB 20HOSE16MB90	2
20	0306983	FITT-MALE RUNTEE 1/4T-1/4NPT	1
21	0307216	LIGHT, AMBER LED RECT 5.25X3.3	2
22	0307538	LIGHT, MRKR-RED LED 4.5 X 1.63	4
23	0307604	KNOB, RED LONG - SK0700-07	4
24	0307778	PLUG, FILLER	2
25	0310010	SUCTION HOSE,1-1/4ID X50 100R4	1
26	0311014	2010 VULC ALUM BODY 160CB LH	1
27	0311015	2010 VULC ALUM BODY 160CB RH	1
28	0311355	HOBBS HOURMETER	1
29	0311502	LIGHT 6" OVAL CLEAR-AMBER LED	6
30	0311503	GROMMET, LIGHT 6" OVAL	6
31	0311508	LIGHT RECT CLEAR-RED LED	4
32	0311510	LIGHT RECT REVERSE W/REFLEX	2
33	0311511	GROMMET, TAIL LIGHT, RECTANGULAR	8
34	0311755	WATER SEPARATOR-MONNIER	1
35	04000381	SS BHSCS 1/4-20 X 1	16
36	0400070	SCREW, 1/4-20X1 HHC GR5	6
37	0400107	SCREW, 5/16-18X2-1/2 HHC GR5	2
38	0400128	SCREW, 3/8-16X1-1/4 FHS GR8 BO	24
39	0400369	NUT, 1/4 SPR J	8
40	0400393	NUT, 3/8-16 JAM	16
41	0400451	WASHER, 1/4	6
42	0400454	WASHER, 1/4 SS	22
43	0400491	LKWASHER, 1/2	14
44	0400498	WASHER, 1/2X2X0.125	14
45	0400687	SCREW, 10-24X3/4 PRH SS	4

ITEM	PART NUMBER	DESCRIPTION	QTY
46	0400776	NUT, 5/16-18 JAM LOK	2
47	0400816	WASHER, M10 SS	4
48	0401054	SCREW, 8-32X3/4 PRH SS	12
49	0402002	NUT, 8-32 LOK EXT SS	12
50	0402020	SCREW, 1/4-20X3/4 HHC SS	2
51	0402021	SCREW, 1/4-20X1 HHC SS	2
52	0402043	SCREW, 3/8-16X1-1/4 HHC SS	8
53	0402111	LKWASHER, 1/4 SS	18
54	0402113	NUT, 1/4-20 LOK SS	2
55	0402120	WASHER, 3/8 SS	16
56	0402121	LKWASHER, 3/8 SS	8
57	0402122	NUT, 3/8-16 HEX SS	8
58	0719585	D-RING, TOWING	2
59	0724476	PAD - NYLATRON - BBOM GUIDE	4
60	0724500	PIN - LOWER JACK LEG CYL	2
61	0726593	APNL-DCV LWR CTL PNL, 3 WINCH	2
62	0726594	APNL-DCV UPR LH CTL PNL, 3WNCH	1
63	0726595	APNL-DCV UPR RH CTL PNL, 3WNCH	1
64	0807947	LH JACK LEG WELD'T - STANDARD	1
65	0807948	RH JACK LEG WELD'T - STANDARD	1
66	0910787	STINGER ASSY - EURO - 144"	1
67	0911010	RECOVERY BOOM INSTALL V-70	1
68	0911804	AIR REGULATOR-GAUGE ASSEMBLY	2
69	0912015	SUBFRAME ASSY V70-100 STDWINCH	1
70	9010520	FITTING-ELBOW 1/4T-1/4NPT	2
71	9011053	FITTING, BRASS 1/4 TUBE-1/4 MP	1
72	9016815	MUNCIE PUMP TSPKS17-17-2BSSB	1
73	9024041	SWITCH, ROCKER SPST RED 12V21A	11
74	9041403	1/2 NC X 1 1/2 HHCS PL GR8	14
75	916770001	HOSE- HYD. 3/8 - 105" 8MJ-6MFA	2
76	920400005	MUD FLAP BRACE PLATE	2
77	9402970	TOOLBOX MTG. PAD	14
78	942480011	PLATE,SLOT-SS REAR WASHER TBOX	14
79	942480300	MTG ANGLE WELD'T LH - DCV COV.	2
80	942487300	MTG ANGLE WELD'T RH - DCV COV.	2
81	94320052	MUD FLAP 920-940 RUBBER	2
82	945770002	6AT2(6T90S-8MJ) HCL 48	2
83	945770003	6AT2(6T90L-8MJ) 24 HYD	4
84	946210500	TUBE, FRONT MTG WELD'T	1
85	946770003	HOSE ASSEMBLY - 8MJ-8MJ X 45	4
86	946770006	HOSE ASSEMBLY - 62	2
87	946770007	HOSE ASSEMBLY - 79	2
88	946770009	HOSE ASSEMBLY - 104	4
89	948570000	5X5 LIFT BAR ASSEMBLY 948 XHD	1
90	GA0215	PIN-"D" RING	2

09008488, BUA V70 2-WINCH STD JACK LEG (cont'd)

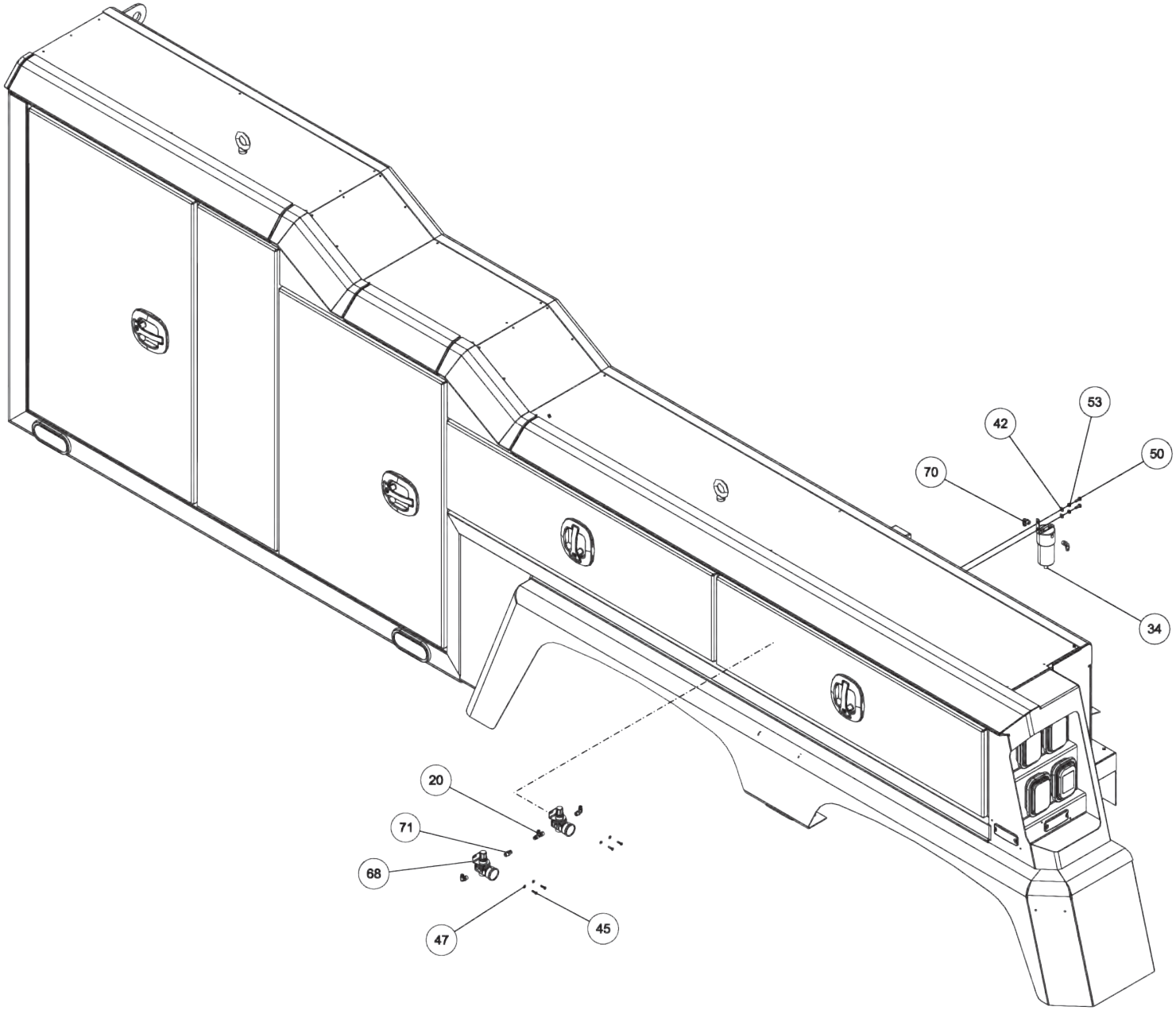

09008488, BUA V70 2-WINCH STD JACK LEG (cont'd)

ITEM	PART NUMBER	DESCRIPTION	QTY
	09008488	BUA V70 2W STD JL	
1	0300341	KNOB, BLACK (BLANK)	12
2	0300364	CLAMP-HOSE,0.875"-2.75" 50"LBS	8
3	0301473	HOSE HYD, 18" LG	4
4	0301696	FITTING, ELB 90 DEG 6MJ-6FJX90	4
5	0301895	GREASE FITTING, 1/8 STR PTF	2
6	0301909	RECEPTACLE BOOT	1
7	0301946	FITTING, BLKHD CONNECT	3
8	0301947	FITTING, 45 DEG ADAPTER	1
9	0301948	HD 7 WAY TRAILER CONNECT	1
10	0301959	SNAP RING-INTERNAL 1-1/2	4
11	0302205	GAUGE, FLUSH MNTG-6000 PSI	4
12	0302534	FITTING, 45 DEG ELBOW	2
13	0302698	FITTING, HOSE BARB,1-1/4	2
14	0302901	HOSE HYD, 120" 12C12	2
15	0303538	FITT, ADAPTER -BRASS 8FP-6MP	1
16	0303539	QUICK DISCONNECT 3/8 FPT	1
17	0303948	ELBOW, 12MJ-16MB90	2
18	0304363	QUICK DISCONNECT 1/2 FPT	2
19	0306539	HOSE BARB 20HOSE16MB90	2
20	0306983	FITT-MALE RUNTEE 1/4T-1/4NPT	1
21	0307216	LIGHT, AMBER LED RECT 5.25X3.3	2
22	0307538	LIGHT, MRKR-RED LED 4.5 X 1.63	4
23	0307604	KNOB, RED LONG - SK0700-07	4
24	0307778	PLUG, FILLER	2
25	0310010	SUCTION HOSE,1-1/4ID X50 100R4	1
26	0311014	2010 VULC ALUM BODY 160CB LH	1
27	0311015	2010 VULC ALUM BODY 160CB RH	1
28	0311355	HOBBS HOURMETER	1
29	0311502	LIGHT 6" OVAL CLEAR-AMBER LED	6
30	0311503	GROMMET, LIGHT 6" OVAL	6
31	0311508	LIGHT RECT CLEAR-RED LED	4
32	0311510	LIGHT RECT REVERSE W/REFLEX	2
33	0311511	GROMMET, TAIL LIGHT, RECTANGULAR	8
34	0311755	WATER SEPARATOR-MONNIER	1
35	04000381	SS BHSCS 1/4-20 X 1	16
36	0400070	SCREW, 1/4-20X1 HHC GR5	6
37	0400107	SCREW, 5/16-18X2-1/2 HHC GR5	2
38	0400128	SCREW, 3/8-16X1-1/4 FHS GR8 BO	24
39	0400369	NUT, 1/4 SPR J	8
40	0400393	NUT, 3/8-16 JAM	16
41	0400451	WASHER, 1/4	6
42	0400454	WASHER, 1/4 SS	22
43	0400491	LKWASHER, 1/2	14
44	0400498	WASHER, 1/2X2X0.125	14
45	0400687	SCREW, 10-24X3/4 PRH SS	4

ITEM	PART NUMBER	DESCRIPTION	QTY
46	0400776	NUT, 5/16-18 JAM LOK	2
47	0400816	WASHER, M10 SS	4
48	0401054	SCREW, 8-32X3/4 PRH SS	12
49	0402002	NUT, 8-32 LOK EXT SS	12
50	0402020	SCREW, 1/4-20X3/4 HHC SS	2
51	0402021	SCREW, 1/4-20X1 HHC SS	2
52	0402043	SCREW, 3/8-16X1-1/4 HHC SS	8
53	0402111	LKWASHER, 1/4 SS	18
54	0402113	NUT, 1/4-20 LOK SS	2
55	0402120	WASHER, 3/8 SS	16
56	0402121	LKWASHER, 3/8 SS	8
57	0402122	NUT, 3/8-16 HEX SS	8
58	0719585	D-RING, TOWING	2
59	0724476	PAD - NYLATRON - BBOM GUIDE	4
60	0724500	PIN - LOWER JACK LEG CYL	2
61	0726593	APNL-DCV LWR CTL PNL, 3 WINCH	2
62	0726594	APNL-DCV UPR LH CTL PNL, 3WNCH	1
63	0726595	APNL-DCV UPR RH CTL PNL, 3WNCH	1
64	0807947	LH JACK LEG WELD'T - STANDARD	1
65	0807948	RH JACK LEG WELD'T - STANDARD	1
66	0910787	STINGER ASSY - EURO - 144"	1
67	0911010	RECOVERY BOOM INSTALL V-70	1
68	0911804	AIR REGULATOR-GAUGE ASSEMBLY	2
69	0912015	SUBFRAME ASSY V70-100 STDWINCH	1
70	9010520	FITTING-ELBOW 1/4T-1/4NPT	2
71	9011053	FITTING, BRASS 1/4 TUBE-1/4 MP	1
72	9016815	MUNCIE PUMP TSPKS17-17-2BSSB	1
73	9024041	SWITCH, ROCKER SPST RED 12V21A	11
74	9041403	1/2 NC X 1 1/2 HHCS PL GR8	14
75	916770001	HOSE- HYD. 3/8 - 105" 8MJ-6MFA	2
76	920400005	MUD FLAP BRACE PLATE	2
77	9402970	TOOLBOX MTG. PAD	14
78	942480011	PLATE,SLOT-SS REAR WASHER TBOX	14
79	942480300	MTG ANGLE WELD'T LH - DCV COV.	2
80	942487300	MTG ANGLE WELD'T RH - DCV COV.	2
81	94320052	MUD FLAP 920-940 RUBBER	2
82	945770002	6AT2(6T90S-8MJ) HCL 48	2
83	945770003	6AT2(6T90L-8MJ) 24 HYD	4
84	946210500	TUBE, FRONT MTG WELD'T	1
85	946770003	HOSE ASSEMBLY - 8MJ-8MJ X 45	4
86	946770006	HOSE ASSEMBLY - 62	2
87	946770007	HOSE ASSEMBLY - 79	2
88	946770009	HOSE ASSEMBLY - 104	4
89	948570000	5X5 LIFT BAR ASSEMBLY 948 XHD	1
90	GA0215	PIN-"D" RING	2

09008488, BUA V70 2-WINCH STD JACK LEG (cont'd)

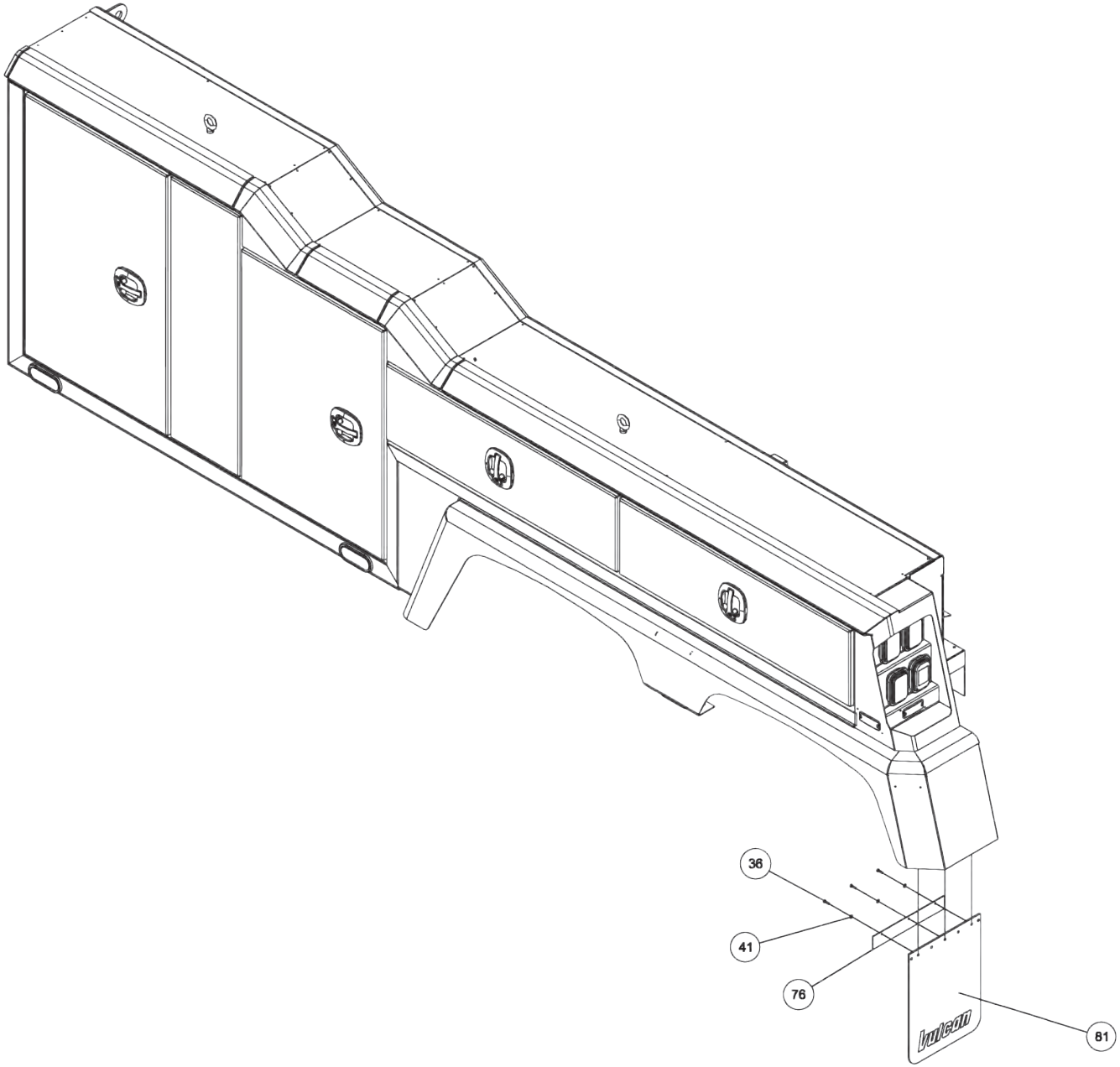

09008488, BUA V70 2-WINCH STD JACK LEG (cont'd)

ITEM	PART NUMBER	DESCRIPTION	QTY
	09008488	BUA V70 2W STD JL	
1	0300341	KNOB, BLACK (BLANK)	12
2	0300364	CLAMP-HOSE,0.875"-2.75" 50"LBS	8
3	0301473	HOSE HYD, 18" LG	4
4	0301696	FITTING, ELB 90 DEG 6MJ-6FJX90	4
5	0301895	GREASE FITTING, 1/8 STR PTF	2
6	0301909	RECEPTACLE BOOT	1
7	0301946	FITTING, BLKHD CONNECT	3
8	0301947	FITTING, 45 DEG ADAPTER	1
9	0301948	HD 7 WAY TRAILER CONNECT	1
10	0301959	SNAP RING-INTERNAL 1-1/2	4
11	0302205	GAUGE, FLUSH MNTG-6000 PSI	4
12	0302534	FITTING, 45 DEG ELBOW	2
13	0302698	FITTING, HOSE BARB,1-1/4	2
14	0302901	HOSE HYD, 120" 12C12	2
15	0303538	FITT, ADAPTER -BRASS 8FP-6MP	1
16	0303539	QUICK DISCONNECT 3/8 FPT	1
17	0303948	ELBOW, 12MJ-16MB90	2
18	0304363	QUICK DISCONNECT 1/2 FPT	2
19	0306539	HOSE BARB 20HOSE16MB90	2
20	0306983	FITT-MALE RUNTEE 1/4T-1/4NPT	1
21	0307216	LIGHT, AMBER LED RECT 5.25X3.3	2
22	0307538	LIGHT, MRKR-RED LED 4.5 X 1.63	4
23	0307604	KNOB, RED LONG - SK0700-07	4
24	0307778	PLUG, FILLER	2
25	0310010	SUCTION HOSE,1-1/4ID X50 100R4	1
26	0311014	2010 VULC ALUM BODY 160CB LH	1
27	0311015	2010 VULC ALUM BODY 160CB RH	1
28	0311355	HOBBS HOURMETER	1
29	0311502	LIGHT 6" OVAL CLEAR-AMBER LED	6
30	0311503	GROMMET, LIGHT 6" OVAL	6
31	0311508	LIGHT RECT CLEAR-RED LED	4
32	0311510	LIGHT RECT REVERSE W/REFLEX	2
33	0311511	GROMMET, TAIL LIGHT, RECTANGULAR	8
34	0311755	WATER SEPARATOR-MONNIER	1
35	04000381	SS BHSCS 1/4-20 X 1	16
36	0400070	SCREW, 1/4-20X1 HHC GR5	6
37	0400107	SCREW, 5/16-18X2-1/2 HHC GR5	2
38	0400128	SCREW, 3/8-16X1-1/4 FHS GR8 BO	24
39	0400369	NUT, 1/4 SPR J	8
40	0400393	NUT, 3/8-16 JAM	16
41	0400451	WASHER, 1/4	6
42	0400454	WASHER, 1/4 SS	22
43	0400491	LKWASHER, 1/2	14
44	0400498	WASHER, 1/2X2X0.125	14
45	0400687	SCREW, 10-24X3/4 PRH SS	4

ITEM	PART NUMBER	DESCRIPTION	QTY
46	0400776	NUT, 5/16-18 JAM LOK	2
47	0400816	WASHER, M10 SS	4
48	0401054	SCREW, 8-32X3/4 PRH SS	12
49	0402002	NUT, 8-32 LOK EXT SS	12
50	0402020	SCREW, 1/4-20X3/4 HHC SS	2
51	0402021	SCREW, 1/4-20X1 HHC SS	2
52	0402043	SCREW, 3/8-16X1-1/4 HHC SS	8
53	0402111	LKWASHER, 1/4 SS	18
54	0402113	NUT, 1/4-20 LOK SS	2
55	0402120	WASHER, 3/8 SS	16
56	0402121	LKWASHER, 3/8 SS	8
57	0402122	NUT, 3/8-16 HEX SS	8
58	0719585	D-RING, TOWING	2
59	0724476	PAD - NYLATRON - BBOM GUIDE	4
60	0724500	PIN - LOWER JACK LEG CYL	2
61	0726593	APNL-DCV LWR CTL PNL, 3 WINCH	2
62	0726594	APNL-DCV UPR LH CTL PNL, 3WNCH	1
63	0726595	APNL-DCV UPR RH CTL PNL, 3WNCH	1
64	0807947	LH JACK LEG WELD'T - STANDARD	1
65	0807948	RH JACK LEG WELD'T - STANDARD	1
66	0910787	STINGER ASSY - EURO - 144"	1
67	0911010	RECOVERY BOOM INSTALL V-70	1
68	0911804	AIR REGULATOR-GAUGE ASSEMBLY	2
69	0912015	SUBFRAME ASSY V70-100 STDWINCH	1
70	9010520	FITTING-ELBOW 1/4T-1/4NPT	2
71	9011053	FITTING, BRASS 1/4 TUBE-1/4 MP	1
72	9016815	MUNCIE PUMP TSPKS17-17-2BSSB	1
73	9024041	SWITCH, ROCKER SPST RED 12V21A	11
74	9041403	1/2 NC X 1 1/2 HHCS PL GR8	14
75	916770001	HOSE- HYD. 3/8 - 105" 8MJ-6MFA	2
76	920400005	MUD FLAP BRACE PLATE	2
77	9402970	TOOLBOX MTG. PAD	14
78	942480011	PLATE,SLOT-SS REAR WASHER TBOX	14
79	942480300	MTG ANGLE WELD'T LH - DCV COV.	2
80	942487300	MTG ANGLE WELD'T RH - DCV COV.	2
81	94320052	MUD FLAP 920-940 RUBBER	2
82	945770002	6AT2(6T90S-8MJ) HCL 48	2
83	945770003	6AT2(6T90L-8MJ) 24 HYD	4
84	946210500	TUBE, FRONT MTG WELD'T	1
85	946770003	HOSE ASSEMBLY - 8MJ-8MJ X 45	4
86	946770006	HOSE ASSEMBLY - 62	2
87	946770007	HOSE ASSEMBLY - 79	2
88	946770009	HOSE ASSEMBLY - 104	4
89	948570000	5X5 LIFT BAR ASSEMBLY 948 XHD	1
90	GA0215	PIN-"D" RING	2

09008488, BUA V70 2-WINCH STD JACK LEG (cont'd)

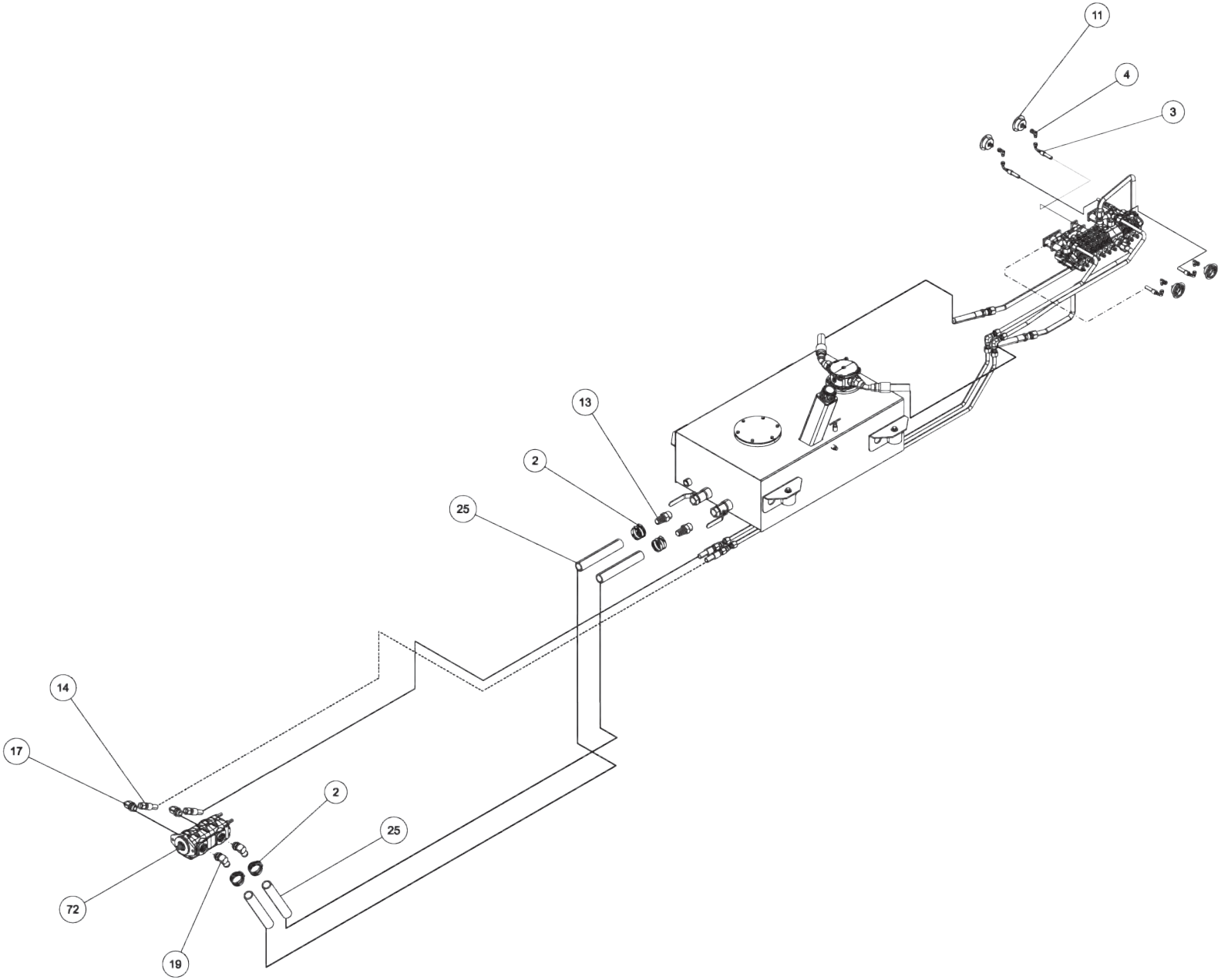

09008488, BUA V70 2-WINCH STD JACK LEG (cont'd)

ITEM	PART NUMBER	DESCRIPTION	QTY
	09008488	BUA V70 2W STD JL	
1	0300341	KNOB, BLACK (BLANK)	12
2	0300364	CLAMP-HOSE,0.875"-2.75" 50"LBS	8
3	0301473	HOSE HYD, 18" LG	4
4	0301696	FITTING, ELB 90 DEG 6MJ-6FJX90	4
5	0301895	GREASE FITTING, 1/8 STR PTF	2
6	0301909	RECEPTACLE BOOT	1
7	0301946	FITTING, BLKHD CONNECT	3
8	0301947	FITTING, 45 DEG ADAPTER	1
9	0301948	HD 7 WAY TRAILER CONNECT	1
10	0301959	SNAP RING-INTERNAL 1-1/2	4
11	0302205	GAUGE, FLUSH MNTG-6000 PSI	4
12	0302534	FITTING, 45 DEG ELBOW	2
13	0302698	FITTING, HOSE BARB,1-1/4	2
14	0302901	HOSE HYD, 120" 12C12	2
15	0303538	FITT, ADAPTER -BRASS 8FP-6MP	1
16	0303539	QUICK DISCONNECT 3/8 FPT	1
17	0303948	ELBOW, 12MJ-16MB90	2
18	0304363	QUICK DISCONNECT 1/2 FPT	2
19	0306539	HOSE BARB 20HOSE16MB90	2
20	0306983	FITT-MALE RUNTEE 1/4T-1/4NPT	1
21	0307216	LIGHT, AMBER LED RECT 5.25X3.3	2
22	0307538	LIGHT, MRKR-RED LED 4.5 X 1.63	4
23	0307604	KNOB, RED LONG - SK0700-07	4
24	0307778	PLUG, FILLER	2
25	0310010	SUCTION HOSE,1-1/4ID X50 100R4	1
26	0311014	2010 VULC ALUM BODY 160CB LH	1
27	0311015	2010 VULC ALUM BODY 160CB RH	1
28	0311355	HOBBS HOURMETER	1
29	0311502	LIGHT 6" OVAL CLEAR-AMBER LED	6
30	0311503	GROMMET, LIGHT 6" OVAL	6
31	0311508	LIGHT RECT CLEAR-RED LED	4
32	0311510	LIGHT RECT REVERSE W/REFLEX	2
33	0311511	GROMMET, TAIL LIGHT, RECTANGULAR	8
34	0311755	WATER SEPARATOR-MONNIER	1
35	04000381	SS BHSCS 1/4-20 X 1	16
36	0400070	SCREW, 1/4-20X1 HHC GR5	6
37	0400107	SCREW, 5/16-18X2-1/2 HHC GR5	2
38	0400128	SCREW, 3/8-16X1-1/4 FHS GR8 BO	24
39	0400369	NUT, 1/4 SPR J	8
40	0400393	NUT, 3/8-16 JAM	16
41	0400451	WASHER, 1/4	6
42	0400454	WASHER, 1/4 SS	22
43	0400491	LKWASHER, 1/2	14
44	0400498	WASHER, 1/2X2X0.125	14
45	0400687	SCREW, 10-24X3/4 PRH SS	4

ITEM	PART NUMBER	DESCRIPTION	QTY
46	0400776	NUT, 5/16-18 JAM LOK	2
47	0400816	WASHER, M10 SS	4
48	0401054	SCREW, 8-32X3/4 PRH SS	12
49	0402002	NUT, 8-32 LOK EXT SS	12
50	0402020	SCREW, 1/4-20X3/4 HHC SS	2
51	0402021	SCREW, 1/4-20X1 HHC SS	2
52	0402043	SCREW, 3/8-16X1-1/4 HHC SS	8
53	0402111	LKWASHER, 1/4 SS	18
54	0402113	NUT, 1/4-20 LOK SS	2
55	0402120	WASHER, 3/8 SS	16
56	0402121	LKWASHER, 3/8 SS	8
57	0402122	NUT, 3/8-16 HEX SS	8
58	0719585	D-RING, TOWING	2
59	0724476	PAD - NYLATRON - BBOM GUIDE	4
60	0724500	PIN - LOWER JACK LEG CYL	2
61	0726593	APNL-DCV LWR CTL PNL, 3 WINCH	2
62	0726594	APNL-DCV UPR LH CTL PNL, 3WNCH	1
63	0726595	APNL-DCV UPR RH CTL PNL, 3WNCH	1
64	0807947	LH JACK LEG WELD'T - STANDARD	1
65	0807948	RH JACK LEG WELD'T - STANDARD	1
66	0910787	STINGER ASSY - EURO - 144"	1
67	0911010	RECOVERY BOOM INSTALL V-70	1
68	0911804	AIR REGULATOR-GAUGE ASSEMBLY	2
69	0912015	SUBFRAME ASSY V70-100 STDWINCH	1
70	9010520	FITTING-ELBOW 1/4T-1/4NPT	2
71	9011053	FITTING, BRASS 1/4 TUBE-1/4 MP	1
72	9016815	MUNCIE PUMP TSPKS17-17-2BSSB	1
73	9024041	SWITCH, ROCKER SPST RED 12V21A	11
74	9041403	1/2 NC X 1 1/2 HHCS PL GR8	14
75	916770001	HOSE- HYD. 3/8 - 105" 8MJ-6MFA	2
76	920400005	MUD FLAP BRACE PLATE	2
77	9402970	TOOLBOX MTG. PAD	14
78	942480011	PLATE,SLOT-SS REAR WASHER TBOX	14
79	942480300	MTG ANGLE WELD'T LH - DCV COV.	2
80	942487300	MTG ANGLE WELD'T RH - DCV COV.	2
81	94320052	MUD FLAP 920-940 RUBBER	2
82	945770002	6AT2(6T90S-8MJ) HCL 48	2
83	945770003	6AT2(6T90L-8MJ) 24 HYD	4
84	946210500	TUBE, FRONT MTG WELD'T	1
85	946770003	HOSE ASSEMBLY - 8MJ-8MJ X 45	4
86	946770006	HOSE ASSEMBLY - 62	2
87	946770007	HOSE ASSEMBLY - 79	2
88	946770009	HOSE ASSEMBLY - 104	4
89	948570000	5X5 LIFT BAR ASSEMBLY 948 XHD	1
90	GA0215	PIN-"D" RING	2

09008488, BUA V70 2-WINCH STD JACK LEG (cont'd)

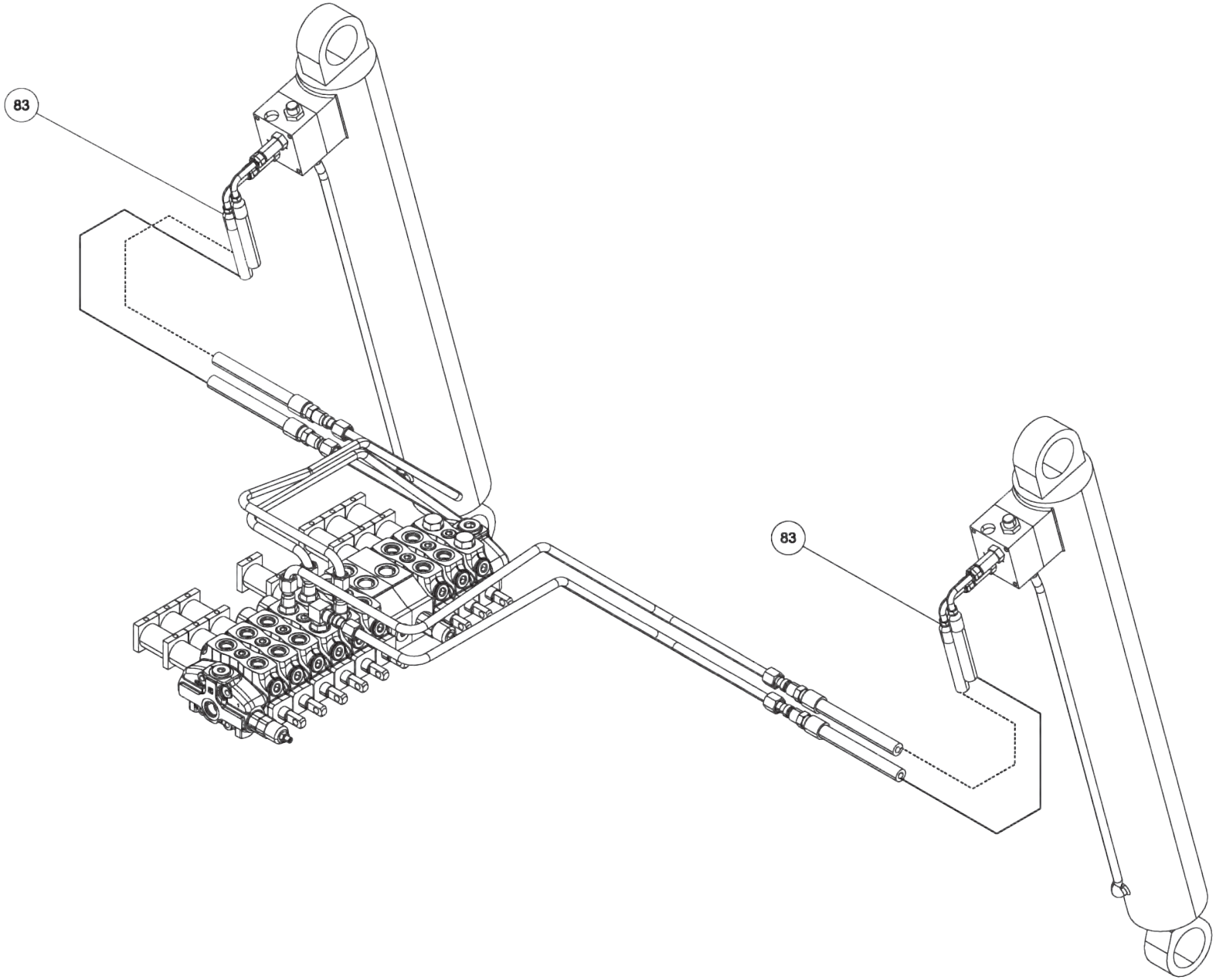

09008488, BUA V70 2-WINCH STD JACK LEG (cont'd)

ITEM	PART NUMBER	DESCRIPTION	QTY
	09008488	BUA V70 2W STD JL	
1	0300341	KNOB, BLACK (BLANK)	12
2	0300364	CLAMP-HOSE,0.875"-2.75" 50"LBS	8
3	0301473	HOSE HYD, 18" LG	4
4	0301696	FITTING, ELB 90 DEG 6MJ-6FJX90	4
5	0301895	GREASE FITTING, 1/8 STR PTF	2
6	0301909	RECEPTACLE BOOT	1
7	0301946	FITTING, BLKHD CONNECT	3
8	0301947	FITTING, 45 DEG ADAPTER	1
9	0301948	HD 7 WAY TRAILER CONNECT	1
10	0301959	SNAP RING-INTERNAL 1-1/2	4
11	0302205	GAUGE, FLUSH MNTG-6000 PSI	4
12	0302534	FITTING, 45 DEG ELBOW	2
13	0302698	FITTING, HOSE BARB,1-1/4	2
14	0302901	HOSE HYD, 120" 12C12	2
15	0303538	FITT, ADAPTER -BRASS 8FP-6MP	1
16	0303539	QUICK DISCONNECT 3/8 FPT	1
17	0303948	ELBOW, 12MJ-16MB90	2
18	0304363	QUICK DISCONNECT 1/2 FPT	2
19	0306539	HOSE BARB 20HOSE16MB90	2
20	0306983	FITT-MALE RUNTEE 1/4T-1/4NPT	1
21	0307216	LIGHT, AMBER LED RECT 5.25X3.3	2
22	0307538	LIGHT, MRKR-RED LED 4.5 X 1.63	4
23	0307604	KNOB, RED LONG - SK0700-07	4
24	0307778	PLUG, FILLER	2
25	0310010	SUCTION HOSE,1-1/4ID X50 100R4	1
26	0311014	2010 VULC ALUM BODY 160CB LH	1
27	0311015	2010 VULC ALUM BODY 160CB RH	1
28	0311355	HOBBS HOURMETER	1
29	0311502	LIGHT 6" OVAL CLEAR-AMBER LED	6
30	0311503	GROMMET, LIGHT 6" OVAL	6
31	0311508	LIGHT RECT CLEAR-RED LED	4
32	0311510	LIGHT RECT REVERSE W/REFLEX	2
33	0311511	GROMMET, TAIL LIGHT, RECTANGULAR	8
34	0311755	WATER SEPARATOR-MONNIER	1
35	04000381	SS BHSCS 1/4-20 X 1	16
36	0400070	SCREW, 1/4-20X1 HHC GR5	6
37	0400107	SCREW, 5/16-18X2-1/2 HHC GR5	2
38	0400128	SCREW, 3/8-16X1-1/4 FHS GR8 BO	24
39	0400369	NUT, 1/4 SPR J	8
40	0400393	NUT, 3/8-16 JAM	16
41	0400451	WASHER, 1/4	6
42	0400454	WASHER, 1/4 SS	22
43	0400491	LKWASHER, 1/2	14
44	0400498	WASHER, 1/2X2X0.125	14
45	0400687	SCREW, 10-24X3/4 PRH SS	4

ITEM	PART NUMBER	DESCRIPTION	QTY
46	0400776	NUT, 5/16-18 JAM LOK	2
47	0400816	WASHER, M10 SS	4
48	0401054	SCREW, 8-32X3/4 PRH SS	12
49	0402002	NUT, 8-32 LOK EXT SS	12
50	0402020	SCREW, 1/4-20X3/4 HHC SS	2
51	0402021	SCREW, 1/4-20X1 HHC SS	2
52	0402043	SCREW, 3/8-16X1-1/4 HHC SS	8
53	0402111	LKWASHER, 1/4 SS	18
54	0402113	NUT, 1/4-20 LOK SS	2
55	0402120	WASHER, 3/8 SS	16
56	0402121	LKWASHER, 3/8 SS	8
57	0402122	NUT, 3/8-16 HEX SS	8
58	0719585	D-RING, TOWING	2
59	0724476	PAD - NYLATRON - BBOM GUIDE	4
60	0724500	PIN - LOWER JACK LEG CYL	2
61	0726593	APNL-DCV LWR CTL PNL, 3 WINCH	2
62	0726594	APNL-DCV UPR LH CTL PNL, 3WNCH	1
63	0726595	APNL-DCV UPR RH CTL PNL, 3WNCH	1
64	0807947	LH JACK LEG WELD'T - STANDARD	1
65	0807948	RH JACK LEG WELD'T - STANDARD	1
66	0910787	STINGER ASSY - EURO - 144"	1
67	0911010	RECOVERY BOOM INSTALL V-70	1
68	0911804	AIR REGULATOR-GAUGE ASSEMBLY	2
69	0912015	SUBFRAME ASSY V70-100 STDWINCH	1
70	9010520	FITTING-ELBOW 1/4T-1/4NPT	2
71	9011053	FITTING, BRASS 1/4 TUBE-1/4 MP	1
72	9016815	MUNCIE PUMP TSPKS17-17-2BSSB	1
73	9024041	SWITCH, ROCKER SPST RED 12V21A	11
74	9041403	1/2 NC X 1 1/2 HHCS PL GR8	14
75	916770001	HOSE- HYD. 3/8 - 105" 8MJ-6MFA	2
76	920400005	MUD FLAP BRACE PLATE	2
77	9402970	TOOLBOX MTG. PAD	14
78	942480011	PLATE,SLOT-SS REAR WASHER TBOX	14
79	942480300	MTG ANGLE WELD'T LH - DCV COV.	2
80	942487300	MTG ANGLE WELD'T RH - DCV COV.	2
81	94320052	MUD FLAP 920-940 RUBBER	2
82	945770002	6AT2(6T90S-8MJ) HCL 48	2
83	945770003	6AT2(6T90L-8MJ) 24 HYD	4
84	946210500	TUBE, FRONT MTG WELD'T	1
85	946770003	HOSE ASSEMBLY - 8MJ-8MJ X 45	4
86	946770006	HOSE ASSEMBLY - 62	2
87	946770007	HOSE ASSEMBLY - 79	2
88	946770009	HOSE ASSEMBLY - 104	4
89	948570000	5X5 LIFT BAR ASSEMBLY 948 XHD	1
90	GA0215	PIN-"D" RING	2

09008488, BUA V70 2-WINCH STD JACK LEG (cont'd)

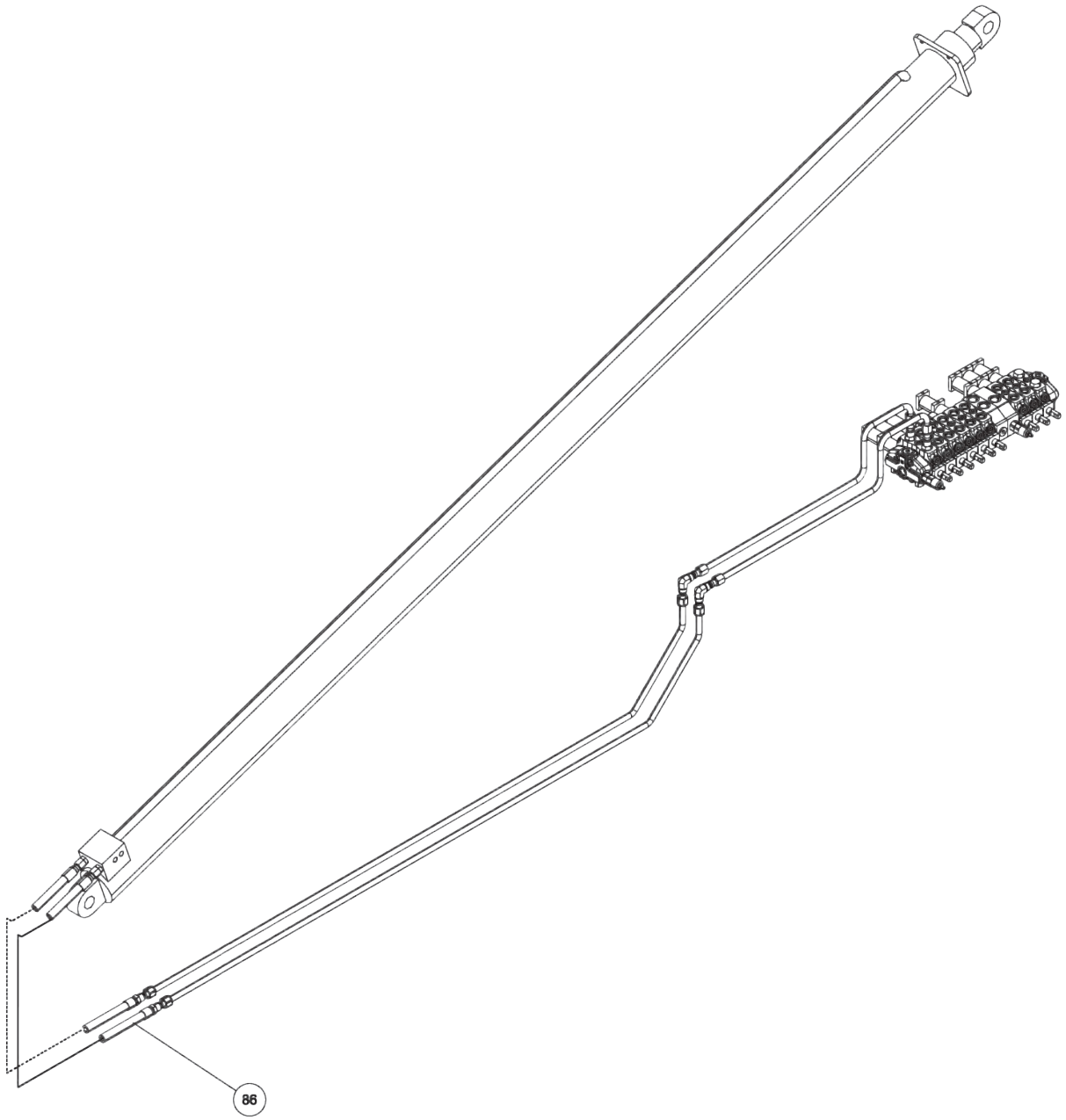

09008488, BUA V70 2-WINCH STD JACK LEG (cont'd)

ITEM	PART NUMBER	DESCRIPTION	QTY
	09008488	BUA V70 2W STD JL	
1	0300341	KNOB, BLACK (BLANK)	12
2	0300364	CLAMP-HOSE,0.875"-2.75" 50"LBS	8
3	0301473	HOSE HYD, 18" LG	4
4	0301696	FITTING, ELB 90 DEG 6MJ-6FJX90	4
5	0301895	GREASE FITTING, 1/8 STR PTF	2
6	0301909	RECEPTACLE BOOT	1
7	0301946	FITTING, BLKHD CONNECT	3
8	0301947	FITTING, 45 DEG ADAPTER	1
9	0301948	HD 7 WAY TRAILER CONNECT	1
10	0301959	SNAP RING-INTERNAL 1-1/2	4
11	0302205	GAUGE, FLUSH MNTG-6000 PSI	4
12	0302534	FITTING, 45 DEG ELBOW	2
13	0302698	FITTING, HOSE BARB,1-1/4	2
14	0302901	HOSE HYD, 120" 12C12	2
15	0303538	FITT, ADAPTER -BRASS 8FP-6MP	1
16	0303539	QUICK DISCONNECT 3/8 FPT	1
17	0303948	ELBOW, 12MJ-16MB90	2
18	0304363	QUICK DISCONNECT 1/2 FPT	2
19	0306539	HOSE BARB 20HOSE16MB90	2
20	0306983	FITT-MALE RUNTEE 1/4T-1/4NPT	1
21	0307216	LIGHT, AMBER LED RECT 5.25X3.3	2
22	0307538	LIGHT, MRKR-RED LED 4.5 X 1.63	4
23	0307604	KNOB, RED LONG - SK0700-07	4
24	0307778	PLUG, FILLER	2
25	0310010	SUCTION HOSE,1-1/4ID X50 100R4	1
26	0311014	2010 VULC ALUM BODY 160CB LH	1
27	0311015	2010 VULC ALUM BODY 160CB RH	1
28	0311355	HOBBS HOURMETER	1
29	0311502	LIGHT 6" OVAL CLEAR-AMBER LED	6
30	0311503	GROMMET, LIGHT 6" OVAL	6
31	0311508	LIGHT RECT CLEAR-RED LED	4
32	0311510	LIGHT RECT REVERSE W/REFLEX	2
33	0311511	GROMMET, TAIL LIGHT, RECTANGULAR	8
34	0311755	WATER SEPARATOR-MONNIER	1
35	04000381	SS BHSCS 1/4-20 X 1	16
36	0400070	SCREW, 1/4-20X1 HHC GR5	6
37	0400107	SCREW, 5/16-18X2-1/2 HHC GR5	2
38	0400128	SCREW, 3/8-16X1-1/4 FHS GR8 BO	24
39	0400369	NUT, 1/4 SPR J	8
40	0400393	NUT, 3/8-16 JAM	16
41	0400451	WASHER, 1/4	6
42	0400454	WASHER, 1/4 SS	22
43	0400491	LKWASHER, 1/2	14
44	0400498	WASHER, 1/2X2X0.125	14
45	0400687	SCREW, 10-24X3/4 PRH SS	4

ITEM	PART NUMBER	DESCRIPTION	QTY
46	0400776	NUT, 5/16-18 JAM LOK	2
47	0400816	WASHER, M10 SS	4
48	0401054	SCREW, 8-32X3/4 PRH SS	12
49	0402002	NUT, 8-32 LOK EXT SS	12
50	0402020	SCREW, 1/4-20X3/4 HHC SS	2
51	0402021	SCREW, 1/4-20X1 HHC SS	2
52	0402043	SCREW, 3/8-16X1-1/4 HHC SS	8
53	0402111	LKWASHER, 1/4 SS	18
54	0402113	NUT, 1/4-20 LOK SS	2
55	0402120	WASHER, 3/8 SS	16
56	0402121	LKWASHER, 3/8 SS	8
57	0402122	NUT, 3/8-16 HEX SS	8
58	0719585	D-RING, TOWING	2
59	0724476	PAD - NYLATRON - BBOM GUIDE	4
60	0724500	PIN - LOWER JACK LEG CYL	2
61	0726593	APNL-DCV LWR CTL PNL, 3 WINCH	2
62	0726594	APNL-DCV UPR LH CTL PNL, 3WNCH	1
63	0726595	APNL-DCV UPR RH CTL PNL, 3WNCH	1
64	0807947	LH JACK LEG WELD'T - STANDARD	1
65	0807948	RH JACK LEG WELD'T - STANDARD	1
66	0910787	STINGER ASSY - EURO - 144"	1
67	0911010	RECOVERY BOOM INSTALL V-70	1
68	0911804	AIR REGULATOR-GAUGE ASSEMBLY	2
69	0912015	SUBFRAME ASSY V70-100 STDWINCH	1
70	9010520	FITTING-ELBOW 1/4T-1/4NPT	2
71	9011053	FITTING, BRASS 1/4 TUBE-1/4 MP	1
72	9016815	MUNCIE PUMP TSPKS17-17-2BSSB	1
73	9024041	SWITCH, ROCKER SPST RED 12V21A	11
74	9041403	1/2 NC X 1 1/2 HHCS PL GR8	14
75	916770001	HOSE- HYD. 3/8 - 105" 8MJ-6MFA	2
76	920400005	MUD FLAP BRACE PLATE	2
77	9402970	TOOLBOX MTG. PAD	14
78	942480011	PLATE,SLOT-SS REAR WASHER TBOX	14
79	942480300	MTG ANGLE WELD'T LH - DCV COV.	2
80	942487300	MTG ANGLE WELD'T RH - DCV COV.	2
81	94320052	MUD FLAP 920-940 RUBBER	2
82	945770002	6AT2(6T90S-8MJ) HCL 48	2
83	945770003	6AT2(6T90L-8MJ) 24 HYD	4
84	946210500	TUBE, FRONT MTG WELD'T	1
85	946770003	HOSE ASSEMBLY - 8MJ-8MJ X 45	4
86	946770006	HOSE ASSEMBLY - 62	2
87	946770007	HOSE ASSEMBLY - 79	2
88	946770009	HOSE ASSEMBLY - 104	4
89	948570000	5X5 LIFT BAR ASSEMBLY 948 XHD	1
90	GA0215	PIN-"D" RING	2

09008488, BUA V70 2-WINCH STD JACK LEG (cont'd)

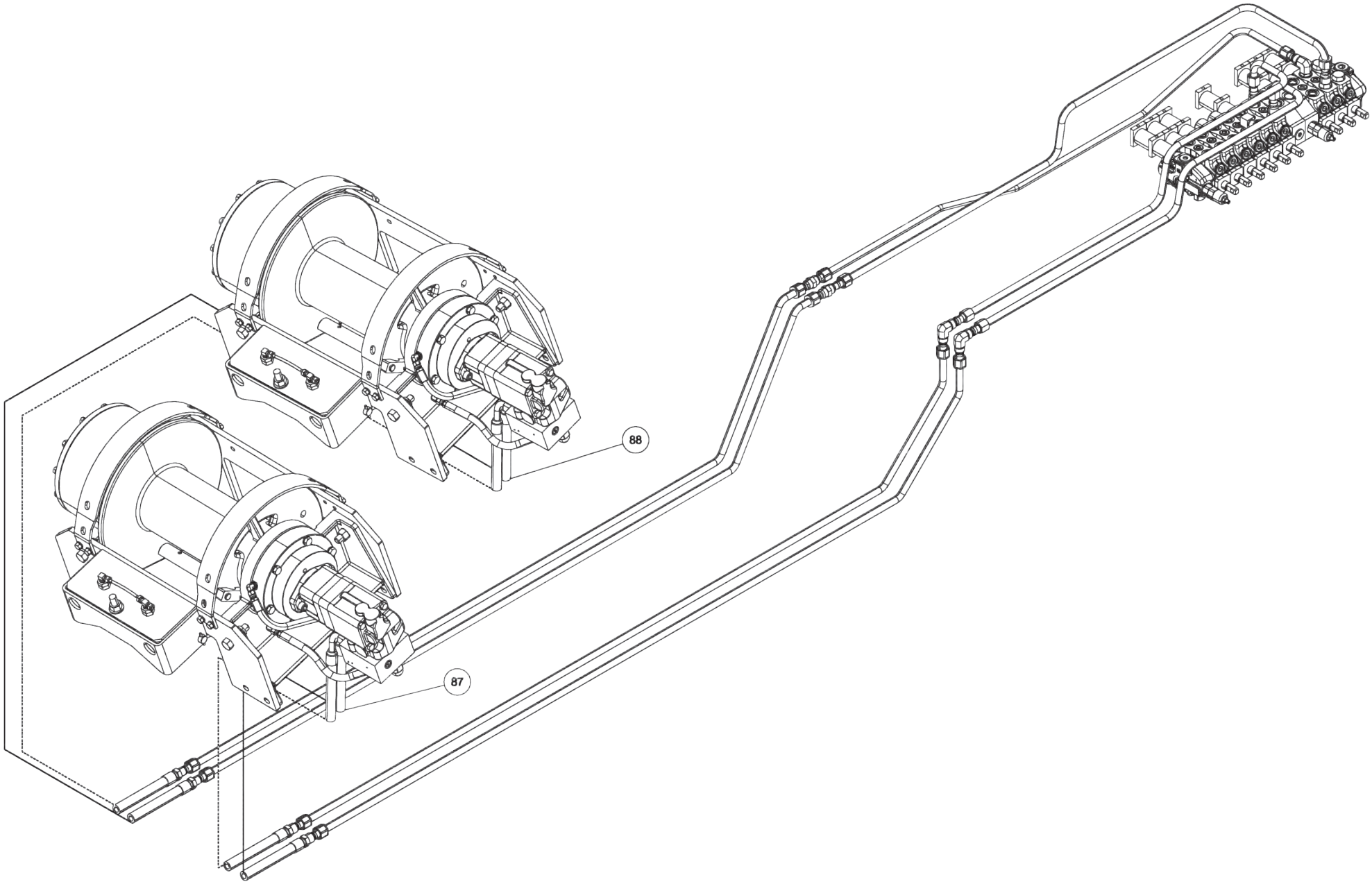

09008488, BUA V70 2-WINCH STD JACK LEG (cont'd)

ITEM	PART NUMBER	DESCRIPTION	QTY
	09008488	BUA V70 2W STD JL	
1	0300341	KNOB, BLACK (BLANK)	12
2	0300364	CLAMP-HOSE,0.875"-2.75" 50"LBS	8
3	0301473	HOSE HYD, 18" LG	4
4	0301696	FITTING, ELB 90 DEG 6MJ-6FJX90	4
5	0301895	GREASE FITTING, 1/8 STR PTF	2
6	0301909	RECEPTACLE BOOT	1
7	0301946	FITTING, BLKHD CONNECT	3
8	0301947	FITTING, 45 DEG ADAPTER	1
9	0301948	HD 7 WAY TRAILER CONNECT	1
10	0301959	SNAP RING-INTERNAL 1-1/2	4
11	0302205	GAUGE, FLUSH MNTG-6000 PSI	4
12	0302534	FITTING, 45 DEG ELBOW	2
13	0302698	FITTING, HOSE BARB,1-1/4	2
14	0302901	HOSE HYD, 120" 12C12	2
15	0303538	FITT, ADAPTER -BRASS 8FP-6MP	1
16	0303539	QUICK DISCONNECT 3/8 FPT	1
17	0303948	ELBOW, 12MJ-16MB90	2
18	0304363	QUICK DISCONNECT 1/2 FPT	2
19	0306539	HOSE BARB 20HOSE16MB90	2
20	0306983	FITT-MALE RUNTEE 1/4T-1/4NPT	1
21	0307216	LIGHT, AMBER LED RECT 5.25X3.3	2
22	0307538	LIGHT, MRKR-RED LED 4.5 X 1.63	4
23	0307604	KNOB, RED LONG - SK0700-07	4
24	0307778	PLUG, FILLER	2
25	0310010	SUCTION HOSE,1-1/4ID X50 100R4	1
26	0311014	2010 VULC ALUM BODY 160CB LH	1
27	0311015	2010 VULC ALUM BODY 160CB RH	1
28	0311355	HOBBS HOURMETER	1
29	0311502	LIGHT 6" OVAL CLEAR-AMBER LED	6
30	0311503	GROMMET, LIGHT 6" OVAL	6
31	0311508	LIGHT RECT CLEAR-RED LED	4
32	0311510	LIGHT RECT REVERSE W/REFLEX	2
33	0311511	GROMMET, TAIL LIGHT, RECTANGULAR	8
34	0311755	WATER SEPARATOR-MONNIER	1
35	04000381	SS BHSCS 1/4-20 X 1	16
36	0400070	SCREW, 1/4-20X1 HHC GR5	6
37	0400107	SCREW, 5/16-18X2-1/2 HHC GR5	2
38	0400128	SCREW, 3/8-16X1-1/4 FHS GR8 BO	24
39	0400369	NUT, 1/4 SPR J	8
40	0400393	NUT, 3/8-16 JAM	16
41	0400451	WASHER, 1/4	6
42	0400454	WASHER, 1/4 SS	22
43	0400491	LKWASHER, 1/2	14
44	0400498	WASHER, 1/2X2X0.125	14
45	0400687	SCREW, 10-24X3/4 PRH SS	4

ITEM	PART NUMBER	DESCRIPTION	QTY
46	0400776	NUT, 5/16-18 JAM LOK	2
47	0400816	WASHER, M10 SS	4
48	0401054	SCREW, 8-32X3/4 PRH SS	12
49	0402002	NUT, 8-32 LOK EXT SS	12
50	0402020	SCREW, 1/4-20X3/4 HHC SS	2
51	0402021	SCREW, 1/4-20X1 HHC SS	2
52	0402043	SCREW, 3/8-16X1-1/4 HHC SS	8
53	0402111	LKWASHER, 1/4 SS	18
54	0402113	NUT, 1/4-20 LOK SS	2
55	0402120	WASHER, 3/8 SS	16
56	0402121	LKWASHER, 3/8 SS	8
57	0402122	NUT, 3/8-16 HEX SS	8
58	0719585	D-RING, TOWING	2
59	0724476	PAD - NYLATRON - BBOM GUIDE	4
60	0724500	PIN - LOWER JACK LEG CYL	2
61	0726593	APNL-DCV LWR CTL PNL, 3 WINCH	2
62	0726594	APNL-DCV UPR LH CTL PNL, 3WNCH	1
63	0726595	APNL-DCV UPR RH CTL PNL, 3WNCH	1
64	0807947	LH JACK LEG WELD'T - STANDARD	1
65	0807948	RH JACK LEG WELD'T - STANDARD	1
66	0910787	STINGER ASSY - EURO - 144"	1
67	0911010	RECOVERY BOOM INSTALL V-70	1
68	0911804	AIR REGULATOR-GAUGE ASSEMBLY	2
69	0912015	SUBFRAME ASSY V70-100 STDWINCH	1
70	9010520	FITTING-ELBOW 1/4T-1/4NPT	2
71	9011053	FITTING, BRASS 1/4 TUBE-1/4 MP	1
72	9016815	MUNCIE PUMP TSPKS17-17-2BSSB	1
73	9024041	SWITCH, ROCKER SPST RED 12V21A	11
74	9041403	1/2 NC X 1 1/2 HHCS PL GR8	14
75	916770001	HOSE- HYD. 3/8 - 105" 8MJ-6MFA	2
76	920400005	MUD FLAP BRACE PLATE	2
77	9402970	TOOLBOX MTG. PAD	14
78	942480011	PLATE,SLOT-SS REAR WASHER TBOX	14
79	942480300	MTG ANGLE WELD'T LH - DCV COV.	2
80	942487300	MTG ANGLE WELD'T RH - DCV COV.	2
81	94320052	MUD FLAP 920-940 RUBBER	2
82	945770002	6AT2(6T90S-8MJ) HCL 48	2
83	945770003	6AT2(6T90L-8MJ) 24 HYD	4
84	946210500	TUBE, FRONT MTG WELD'T	1
85	946770003	HOSE ASSEMBLY - 8MJ-8MJ X 45	4
86	946770006	HOSE ASSEMBLY - 62	2
87	946770007	HOSE ASSEMBLY - 79	2
88	946770009	HOSE ASSEMBLY - 104	4
89	948570000	5X5 LIFT BAR ASSEMBLY 948 XHD	1
90	GA0215	PIN-"D" RING	2

09008488, BUA V70 2-WINCH STD JACK LEG (cont'd)

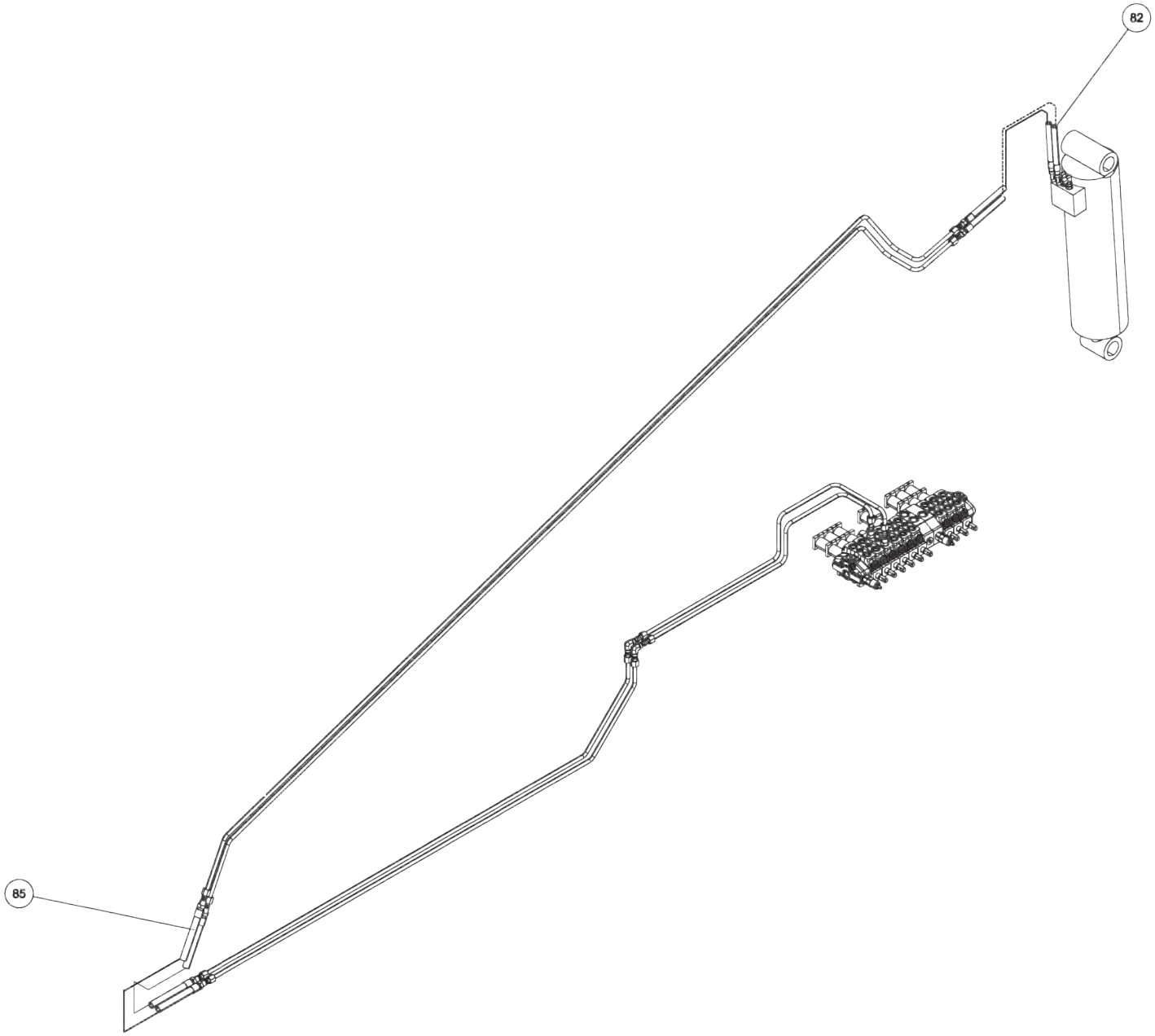

09008488, BUA V70 2-WINCH STD JACK LEG (cont'd)

ITEM	PART NUMBER	DESCRIPTION	QTY
	09008488	BUA V70 2W STD JL	
1	0300341	KNOB, BLACK (BLANK)	12
2	0300364	CLAMP-HOSE,0.875"-2.75" 50"LBS	8
3	0301473	HOSE HYD, 18" LG	4
4	0301696	FITTING, ELB 90 DEG 6MJ-6FJX90	4
5	0301895	GREASE FITTING, 1/8 STR PTF	2
6	0301909	RECEPTACLE BOOT	1
7	0301946	FITTING, BLKHD CONNECT	3
8	0301947	FITTING, 45 DEG ADAPTER	1
9	0301948	HD 7 WAY TRAILER CONNECT	1
10	0301959	SNAP RING-INTERNAL 1-1/2	4
11	0302205	GAUGE, FLUSH MNTG-6000 PSI	4
12	0302534	FITTING, 45 DEG ELBOW	2
13	0302698	FITTING, HOSE BARB,1-1/4	2
14	0302901	HOSE HYD, 120" 12C12	2
15	0303538	FITT, ADAPTER -BRASS 8FP-6MP	1
16	0303539	QUICK DISCONNECT 3/8 FPT	1
17	0303948	ELBOW, 12MJ-16MB90	2
18	0304363	QUICK DISCONNECT 1/2 FPT	2
19	0306539	HOSE BARB 20HOSE16MB90	2
20	0306983	FITT-MALE RUNTEE 1/4T-1/4NPT	1
21	0307216	LIGHT, AMBER LED RECT 5.25X3.3	2
22	0307538	LIGHT, MRKR-RED LED 4.5 X 1.63	4
23	0307604	KNOB, RED LONG - SK0700-07	4
24	0307778	PLUG, FILLER	2
25	0310010	SUCTION HOSE,1-1/4ID X50 100R4	1
26	0311014	2010 VULC ALUM BODY 160CB LH	1
27	0311015	2010 VULC ALUM BODY 160CB RH	1
28	0311355	HOBBS HOURMETER	1
29	0311502	LIGHT 6" OVAL CLEAR-AMBER LED	6
30	0311503	GROMMET, LIGHT 6" OVAL	6
31	0311508	LIGHT RECT CLEAR-RED LED	4
32	0311510	LIGHT RECT REVERSE W/REFLEX	2
33	0311511	GROMMET, TAIL LIGHT, RECTANGULAR	8
34	0311755	WATER SEPARATOR-MONNIER	1
35	04000381	SS BHSCS 1/4-20 X 1	16
36	0400070	SCREW, 1/4-20X1 HHC GR5	6
37	0400107	SCREW, 5/16-18X2-1/2 HHC GR5	2
38	0400128	SCREW, 3/8-16X1-1/4 FHS GR8 BO	24
39	0400369	NUT, 1/4 SPR J	8
40	0400393	NUT, 3/8-16 JAM	16
41	0400451	WASHER, 1/4	6
42	0400454	WASHER, 1/4 SS	22
43	0400491	LKWASHER, 1/2	14
44	0400498	WASHER, 1/2X2X0.125	14
45	0400687	SCREW, 10-24X3/4 PRH SS	4

ITEM	PART NUMBER	DESCRIPTION	QTY
46	0400776	NUT, 5/16-18 JAM LOK	2
47	0400816	WASHER, M10 SS	4
48	0401054	SCREW, 8-32X3/4 PRH SS	12
49	0402002	NUT, 8-32 LOK EXT SS	12
50	0402020	SCREW, 1/4-20X3/4 HHC SS	2
51	0402021	SCREW, 1/4-20X1 HHC SS	2
52	0402043	SCREW, 3/8-16X1-1/4 HHC SS	8
53	0402111	LKWASHER, 1/4 SS	18
54	0402113	NUT, 1/4-20 LOK SS	2
55	0402120	WASHER, 3/8 SS	16
56	0402121	LKWASHER, 3/8 SS	8
57	0402122	NUT, 3/8-16 HEX SS	8
58	0719585	D-RING, TOWING	2
59	0724476	PAD - NYLATRON - BBOM GUIDE	4
60	0724500	PIN - LOWER JACK LEG CYL	2
61	0726593	APNL-DCV LWR CTL PNL, 3 WINCH	2
62	0726594	APNL-DCV UPR LH CTL PNL, 3WNCH	1
63	0726595	APNL-DCV UPR RH CTL PNL, 3WNCH	1
64	0807947	LH JACK LEG WELD'T - STANDARD	1
65	0807948	RH JACK LEG WELD'T - STANDARD	1
66	0910787	STINGER ASSY - EURO - 144"	1
67	0911010	RECOVERY BOOM INSTALL V-70	1
68	0911804	AIR REGULATOR-GAUGE ASSEMBLY	2
69	0912015	SUBFRAME ASSY V70-100 STDWINCH	1
70	9010520	FITTING-ELBOW 1/4T-1/4NPT	2
71	9011053	FITTING, BRASS 1/4 TUBE-1/4 MP	1
72	9016815	MUNCIE PUMP TSPKS17-17-2BSSB	1
73	9024041	SWITCH, ROCKER SPST RED 12V21A	11
74	9041403	1/2 NC X 1 1/2 HHCS PL GR8	14
75	916770001	HOSE- HYD. 3/8 - 105" 8MJ-6MFA	2
76	920400005	MUD FLAP BRACE PLATE	2
77	9402970	TOOLBOX MTG. PAD	14
78	942480011	PLATE,SLOT-SS REAR WASHER TBOX	14
79	942480300	MTG ANGLE WELD'T LH - DCV COV.	2
80	942487300	MTG ANGLE WELD'T RH - DCV COV.	2
81	94320052	MUD FLAP 920-940 RUBBER	2
82	945770002	6AT2(6T90S-8MJ) HCL 48	2
83	945770003	6AT2(6T90L-8MJ) 24 HYD	4
84	946210500	TUBE, FRONT MTG WELD'T	1
85	946770003	HOSE ASSEMBLY - 8MJ-8MJ X 45	4
86	946770006	HOSE ASSEMBLY - 62	2
87	946770007	HOSE ASSEMBLY - 79	2
88	946770009	HOSE ASSEMBLY - 104	4
89	948570000	5X5 LIFT BAR ASSEMBLY 948 XHD	1
90	GA0215	PIN-"D" RING	2

09008488, BUA V70 2-WINCH STD JACK LEG (cont'd)

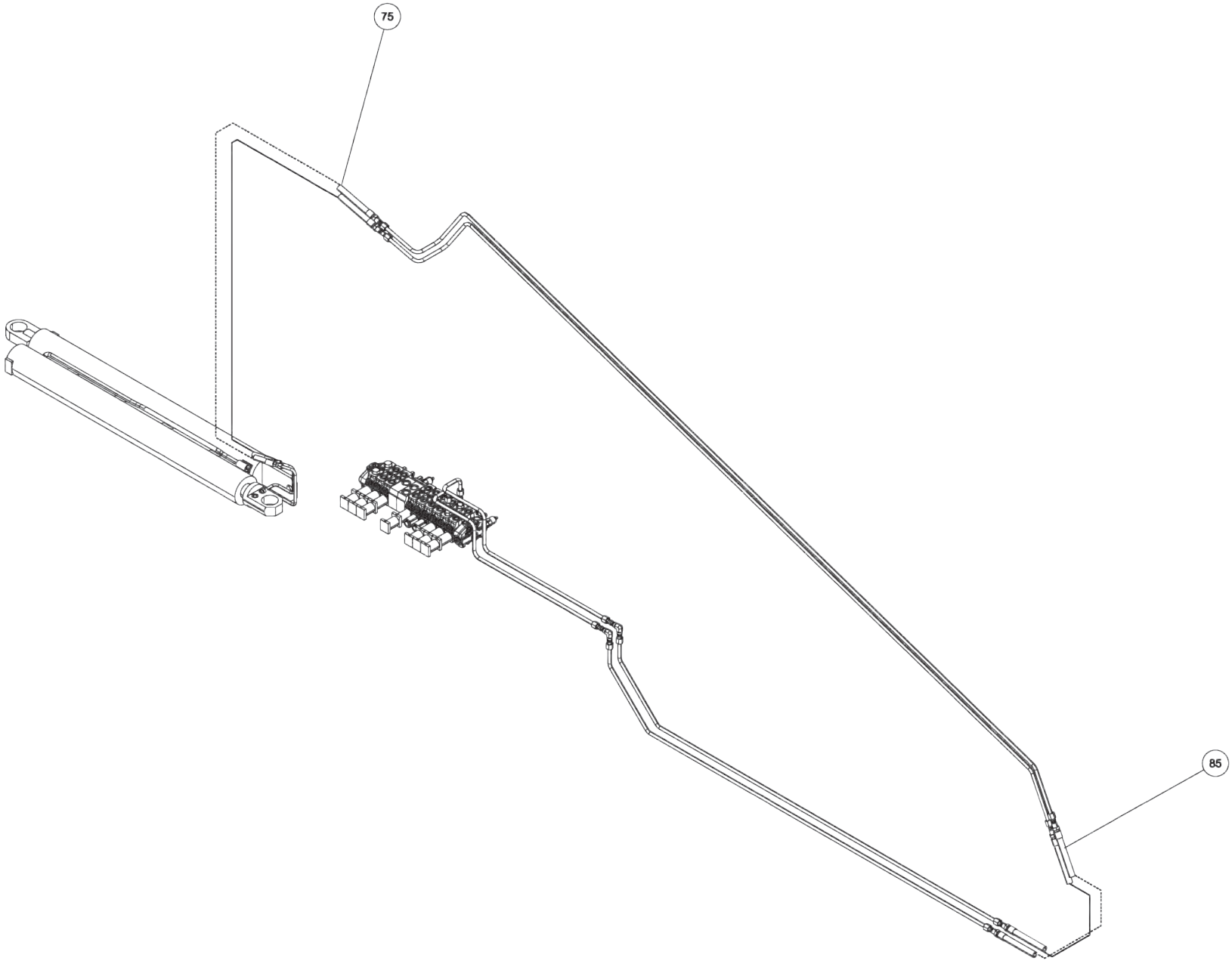

09008488, BUA V70 2-WINCH STD JACK LEG (cont'd)

ITEM	PART NUMBER	DESCRIPTION	QTY
	09008488	BUA V70 2W STD JL	
1	0300341	KNOB, BLACK (BLANK)	12
2	0300364	CLAMP-HOSE,0.875"-2.75" 50"LBS	8
3	0301473	HOSE HYD, 18" LG	4
4	0301696	FITTING, ELB 90 DEG 6MJ-6FJX90	4
5	0301895	GREASE FITTING, 1/8 STR PTF	2
6	0301909	RECEPTACLE BOOT	1
7	0301946	FITTING, BLKHD CONNECT	3
8	0301947	FITTING, 45 DEG ADAPTER	1
9	0301948	HD 7 WAY TRAILER CONNECT	1
10	0301959	SNAP RING-INTERNAL 1-1/2	4
11	0302205	GAUGE, FLUSH MNTG-6000 PSI	4
12	0302534	FITTING, 45 DEG ELBOW	2
13	0302698	FITTING, HOSE BARB,1-1/4	2
14	0302901	HOSE HYD, 120" 12C12	2
15	0303538	FITT, ADAPTER -BRASS 8FP-6MP	1
16	0303539	QUICK DISCONNECT 3/8 FPT	1
17	0303948	ELBOW, 12MJ-16MB90	2
18	0304363	QUICK DISCONNECT 1/2 FPT	2
19	0306539	HOSE BARB 20HOSE16MB90	2
20	0306983	FITT-MALE RUNTEE 1/4T-1/4NPT	1
21	0307216	LIGHT, AMBER LED RECT 5.25X3.3	2
22	0307538	LIGHT, MRKR-RED LED 4.5 X 1.63	4
23	0307604	KNOB, RED LONG - SK0700-07	4
24	0307778	PLUG, FILLER	2
25	0310010	SUCTION HOSE,1-1/4ID X50 100R4	1
26	0311014	2010 VULC ALUM BODY 160CB LH	1
27	0311015	2010 VULC ALUM BODY 160CB RH	1
28	0311355	HOBBS HOURMETER	1
29	0311502	LIGHT 6" OVAL CLEAR-AMBER LED	6
30	0311503	GROMMET, LIGHT 6" OVAL	6
31	0311508	LIGHT RECT CLEAR-RED LED	4
32	0311510	LIGHT RECT REVERSE W/REFLEX	2
33	0311511	GROMMET, TAIL LIGHT, RECTANGULAR	8
34	0311755	WATER SEPARATOR-MONNIER	1
35	04000381	SS BHSCS 1/4-20 X 1	16
36	0400070	SCREW, 1/4-20X1 HHC GR5	6
37	0400107	SCREW, 5/16-18X2-1/2 HHC GR5	2
38	0400128	SCREW, 3/8-16X1-1/4 FHS GR8 BO	24
39	0400369	NUT, 1/4 SPR J	8
40	0400393	NUT, 3/8-16 JAM	16
41	0400451	WASHER, 1/4	6
42	0400454	WASHER, 1/4 SS	22
43	0400491	LKWASHER, 1/2	14
44	0400498	WASHER, 1/2X2X0.125	14
45	0400687	SCREW, 10-24X3/4 PRH SS	4

ITEM	PART NUMBER	DESCRIPTION	QTY
46	0400776	NUT, 5/16-18 JAM LOK	2
47	0400816	WASHER, M10 SS	4
48	0401054	SCREW, 8-32X3/4 PRH SS	12
49	0402002	NUT, 8-32 LOK EXT SS	12
50	0402020	SCREW, 1/4-20X3/4 HHC SS	2
51	0402021	SCREW, 1/4-20X1 HHC SS	2
52	0402043	SCREW, 3/8-16X1-1/4 HHC SS	8
53	0402111	LKWASHER, 1/4 SS	18
54	0402113	NUT, 1/4-20 LOK SS	2
55	0402120	WASHER, 3/8 SS	16
56	0402121	LKWASHER, 3/8 SS	8
57	0402122	NUT, 3/8-16 HEX SS	8
58	0719585	D-RING, TOWING	2
59	0724476	PAD - NYLATRON - BBOM GUIDE	4
60	0724500	PIN - LOWER JACK LEG CYL	2
61	0726593	APNL-DCV LWR CTL PNL, 3 WINCH	2
62	0726594	APNL-DCV UPR LH CTL PNL, 3WNCH	1
63	0726595	APNL-DCV UPR RH CTL PNL, 3WNCH	1
64	0807947	LH JACK LEG WELD'T - STANDARD	1
65	0807948	RH JACK LEG WELD'T - STANDARD	1
66	0910787	STINGER ASSY - EURO - 144"	1
67	0911010	RECOVERY BOOM INSTALL V-70	1
68	0911804	AIR REGULATOR-GAUGE ASSEMBLY	2
69	0912015	SUBFRAME ASSY V70-100 STDWINCH	1
70	9010520	FITTING-ELBOW 1/4T-1/4NPT	2
71	9011053	FITTING, BRASS 1/4 TUBE-1/4 MP	1
72	9016815	MUNCIE PUMP TSPKS17-17-2BSSB	1
73	9024041	SWITCH, ROCKER SPST RED 12V21A	11
74	9041403	1/2 NC X 1 1/2 HHCS PL GR8	14
75	916770001	HOSE- HYD. 3/8 - 105" 8MJ-6MFA	2
76	920400005	MUD FLAP BRACE PLATE	2
77	9402970	TOOLBOX MTG. PAD	14
78	942480011	PLATE,SLOT-SS REAR WASHER TBOX	14
79	942480300	MTG ANGLE WELD'T LH - DCV COV.	2
80	942487300	MTG ANGLE WELD'T RH - DCV COV.	2
81	94320052	MUD FLAP 920-940 RUBBER	2
82	945770002	6AT2(6T90S-8MJ) HCL 48	2
83	945770003	6AT2(6T90L-8MJ) 24 HYD	4
84	946210500	TUBE, FRONT MTG WELD'T	1
85	946770003	HOSE ASSEMBLY - 8MJ-8MJ X 45	4
86	946770006	HOSE ASSEMBLY - 62	2
87	946770007	HOSE ASSEMBLY - 79	2
88	946770009	HOSE ASSEMBLY - 104	4
89	948570000	5X5 LIFT BAR ASSEMBLY 948 XHD	1
90	GA0215	PIN-"D" RING	2

09008489, BUA V70 2-WINCH JACK LEG FLIPPER FEET

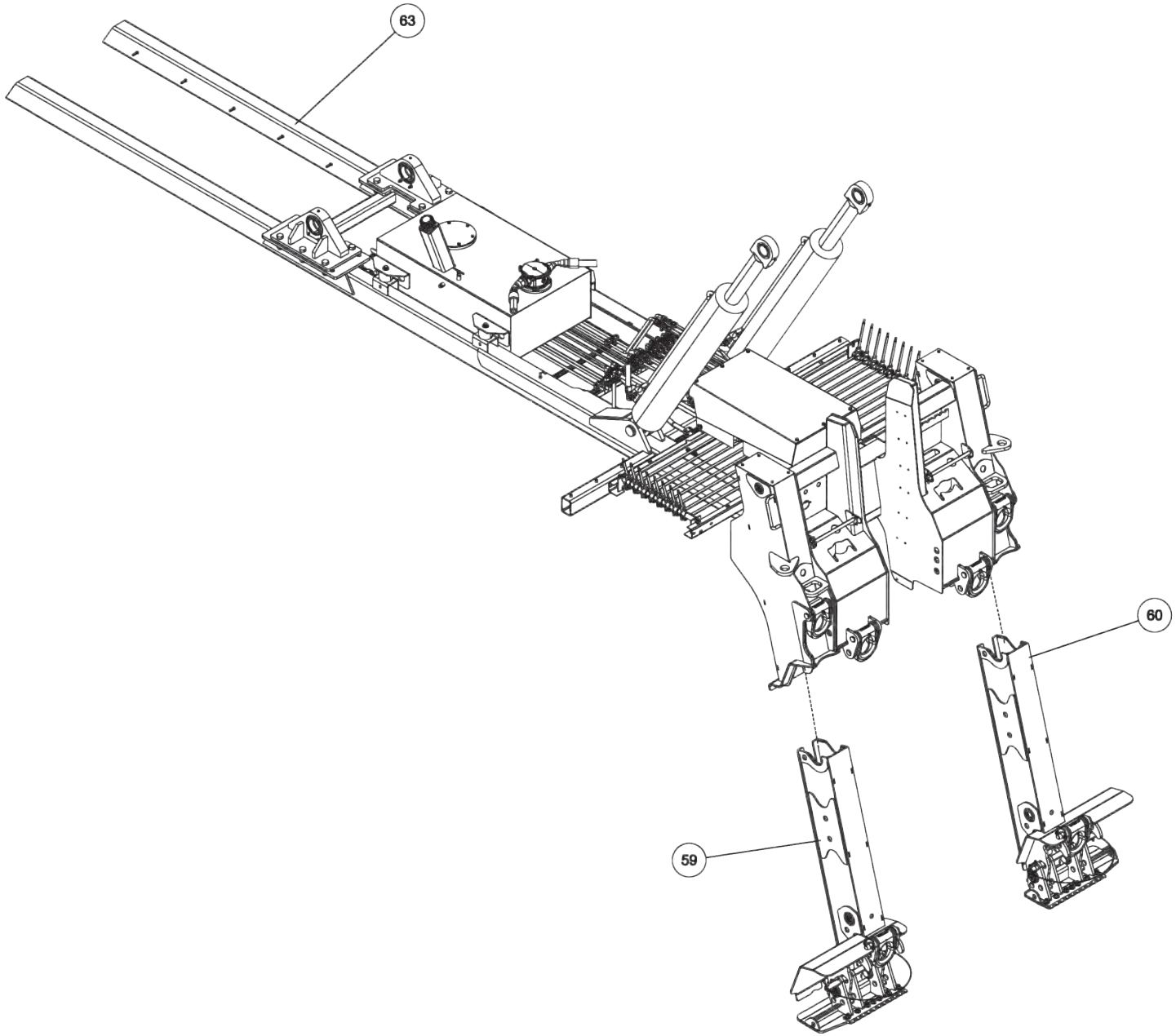

09008489, BUA V70 2-WINCH JACK LEG FLIPPER FEET (cont'd)

ITEM	PART NUMBER	DESCRIPTION	QTY
--	09008489	BUA V70 2W JL FLIPPER FEET	
1	0300341	KNOB, BLACK (BLANK)	12
2	0300364	CLAMP-HOSE,0.875"-2.75" 50"LBS	8
3	0301473	HOSE HYD, 18" LG	4
4	0301696	FITTING, ELB 90 DEG 6MJ-6FJX90	4
5	0301909	RECEPTACLE BOOT	1
6	0301946	FITTING, BLKHD CONNECT	3
7	0301947	FITTING, 45 DEG ADAPTER	1
8	0301948	HD 7 WAY TRAILER CONNECT	1
9	0302205	GAUGE, FLUSH MNTG-6000 PSI	4
10	0302534	FITTING, 45 DEG ELBOW	2
11	0302698	FITTING, HOSE BARB,1-1/4	2
12	0302901	HOSE HYD, 120" 12C12	2
13	0303538	FITT, ADAPTER -BRASS 8FP-6MP	1
14	0303539	QUICK DISCONNECT 3/8 FPT	1
15	0303948	ELBOW, 12MJ-16MB90	2
16	0304363	QUICK DISCONNECT 1/2 FPT	2
17	0306539	HOSE BARB 20HOSE16MB90	2
18	0306983	FITT-MALE RUNTEE 1/4T-1/4NPT	1
19	0307216	LIGHT, AMBER LED RECT 5.25X3.3	2
20	0307538	LIGHT, MRKR-RED LED 4.5 X 1.63	4
21	0307604	KNOB, RED LONG - SK0700-07	4
22	0307778	PLUG, FILLER	2
23	0310010	SUCTION HOSE,1-1/4ID X50 100R4	1
24	0310944	LH 200 CB TDM ALM BDY ‘10 VULC	1
25	0310945	RH 200 CB TDM ALM BDY ‘10 VULC	1
26	0311355	HOBBS HOURMETER	1
27	0311502	LIGHT 6"OVAL CLEAR-AMBER LED	6
28	0311503	GROMMET, LIGHT 6" OVAL	6
29	0311508	LED RECT RED STOP-CLEAR-12/24V	4
30	0311510	LIGHT RECT 12V REVERSE REFLEX	2
31	0311511	GROMMET, TAIL LIGHT, RECTANGULAR	8
32	0311755	WATER SEPARATOR-MONNIER	1
33	04000381	SS BHSCS 1/4-20 X 1	16
34	0400070	SCREW, 1/4-20X1 HHC GR5	6
35	0400128	SCREW, 3/8-16X1-1/4 FHS GR8 BO	24
36	0400369	NUT, 1/4 SPR J	8
37	0400393	NUT, 3/8-16 JAM	16
38	0400451	WASHER, 1/4	6
39	0400454	WASHER, 1/4 SS	22
40	0400491	LKWASHER, 1/2	14
41	0400498	WASHER, 1/2X2X0.125	14

ITEM	PART NUMBER	DESCRIPTION	QTY
42	0400687	SCREW, 10-24X3/4 PRH SS	4
43	0400816	WASHER, M10 SS	4
44	0401054	SCREW, 8-32X3/4 PRH SS	12
45	0402002	NUT, 8-32 LOK EXT SS	12
46	0402020	SCREW, 1/4-20X3/4 HHC SS	2
47	0402021	SCREW, 1/4-20X1 HHC SS	2
48	0402043	SCREW, 3/8-16X1-1/4 HHC SS	8
49	0402111	LKWASHER, 1/4 SS	18
50	0402113	NUT, 1/4-20 LOK SS	2
51	0402120	WASHER, 3/8 SS	16
52	0402121	LKWASHER, 3/8 SS	8
53	0402122	NUT, 3/8-16 HEX SS	8
54	0724476	PAD - NYLATRON - BBOM GUIDE	4
55	0726593	APNL-DCV LWR CTL PNL, 3 WINCH	2
56	0726594	APNL-DCV UPR LH CTL PNL,3WNCH	1
57	0726595	APNL-DCV UPR RH CTL PNL,3WNCH	1
58	0910787	STINGER ASSY - EURO - 144"	1
59	0910973	LH JACK LEG ASSY -FLIPPER FEET	1
60	0910974	RH JACK LEG ASSY -FLIPPER FEET	1
61	0911010	RECOVERY BOOM INSTALL V-70	1
62	0911804	AIR REGULATOR-GAUGE ASSEMBLY	2
63	0912015	SUBFRAME ASSY V70-100 STDWINCH	1
64	9010520	FITTING-ELBOW 1/4T-1/4NPT	4
65	9011053	FITTING, BRASS 1/4 TUBE-1/4 MP	1
66	9016815	MUNCIE PUMP TSPKS17-17-2BSSB	1
67	9024041	SWITCH, ROCKER SPST RED 12V21A	9
68	9041403	1/2 NC X 1 1/2 HHCS PL GR8	14
69	916770001	HOSE- HYD. 3/8 - 105" 8MJ-6MFA	1
70	920400005	MUD FLAP BRACE PLATE	1
71	9402970	TOOLBOX MTG. PAD	14
72	942480011	PLATE,SLOT-SS REAR WASHER TBOX	14
73	942480300	MTG ANGLE WELD'T LH - DCV COV.	2
74	942487300	MTG ANGLE WELD'T RH - DCV COV.	2
75	94320052	MUD FLAP 920-940 RUBBER	2
76	945770002	6AT2(6T90S-8MJ) HCL 48	2
77	945770003	6AT2(6T90L-8MJ) 24 HYD	4
78	946210500	TUBE, FRONT MTG WELD'T	1
79	946770003	HOSE ASSEMBLY - 8MJ-8MJ X 45	4
80	946770006	HOSE ASSEMBLY - 62	1
81	946770007	HOSE ASSEMBLY - 79	1
82	946770009	HOSE ASSEMBLY - 104	1
83	948570000	5X5 LIFT BAR ASSEMBLY 948 XHD	1

09008489, BUA V70 2-WINCH JACK LEG FLIPPER FEET (cont'd)

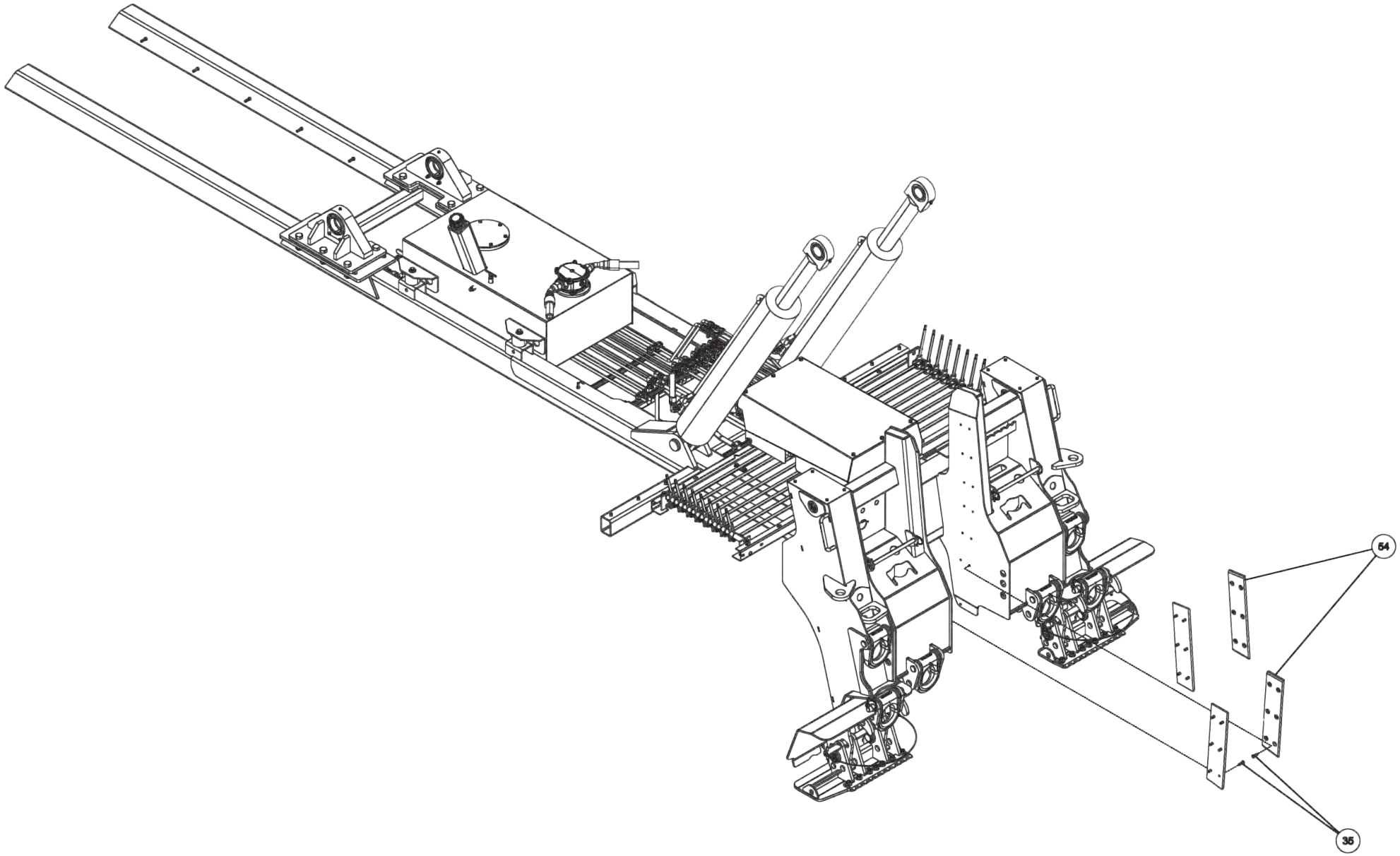

09008489, BUA V70 2-WINCH JACK LEG FLIPPER FEET (cont'd)

ITEM	PART NUMBER	DESCRIPTION	QTY
--	09008489	BUA V70 2W JL FLIPPER FEET	
1	0300341	KNOB, BLACK (BLANK)	12
2	0300364	CLAMP-HOSE,0.875"-2.75" 50"LBS	8
3	0301473	HOSE HYD, 18" LG	4
4	0301696	FITTING, ELB 90 DEG 6MJ-6FJX90	4
5	0301909	RECEPTACLE BOOT	1
6	0301946	FITTING, BLKHD CONNECT	3
7	0301947	FITTING, 45 DEG ADAPTER	1
8	0301948	HD 7 WAY TRAILER CONNECT	1
9	0302205	GAUGE, FLUSH MNTG-6000 PSI	4
10	0302534	FITTING, 45 DEG ELBOW	2
11	0302698	FITTING, HOSE BARB,1-1/4	2
12	0302901	HOSE HYD, 120" 12C12	2
13	0303538	FITT, ADAPTER -BRASS 8FP-6MP	1
14	0303539	QUICK DISCONNECT 3/8 FPT	1
15	0303948	ELBOW, 12MJ-16MB90	2
16	0304363	QUICK DISCONNECT 1/2 FPT	2
17	0306539	HOSE BARB 20HOSE16MB90	2
18	0306983	FITT-MALE RUNTEE 1/4T-1/4NPT	1
19	0307216	LIGHT, AMBER LED RECT 5.25X3.3	2
20	0307538	LIGHT, MRKR-RED LED 4.5 X 1.63	4
21	0307604	KNOB, RED LONG - SK0700-07	4
22	0307778	PLUG, FILLER	2
23	0310010	SUCTION HOSE,1-1/4ID X50 100R4	1
24	0310944	LH 200 CB TDM ALM BDY ‘10 VULC	1
25	0310945	RH 200 CB TDM ALM BDY ‘10 VULC	1
26	0311355	HOBBS HOURMETER	1
27	0311502	LIGHT 6"OVAL CLEAR-AMBER LED	6
28	0311503	GROMMET, LIGHT 6" OVAL	6
29	0311508	LED RECT RED STOP-CLEAR-12/24V	4
30	0311510	LIGHT RECT 12V REVERSE REFLEX	2
31	0311511	GROMMET, TAIL LIGHT, RECTANGULAR	8
32	0311755	WATER SEPARATOR-MONNIER	1
33	04000381	SS BHSCS 1/4-20 X 1	16
34	0400070	SCREW, 1/4-20X1 HHC GR5	6
35	0400128	SCREW, 3/8-16X1-1/4 FHS GR8 BO	24
36	0400369	NUT, 1/4 SPR J	8
37	0400393	NUT, 3/8-16 JAM	16
38	0400451	WASHER, 1/4	6
39	0400454	WASHER, 1/4 SS	22
40	0400491	LKWASHER, 1/2	14
41	0400498	WASHER, 1/2X2X0.125	14

ITEM	PART NUMBER	DESCRIPTION	QTY
42	0400687	SCREW, 10-24X3/4 PRH SS	4
43	0400816	WASHER, M10 SS	4
44	0401054	SCREW, 8-32X3/4 PRH SS	12
45	0402002	NUT, 8-32 LOK EXT SS	12
46	0402020	SCREW, 1/4-20X3/4 HHC SS	2
47	0402021	SCREW, 1/4-20X1 HHC SS	2
48	0402043	SCREW, 3/8-16X1-1/4 HHC SS	8
49	0402111	LKWASHER, 1/4 SS	18
50	0402113	NUT, 1/4-20 LOK SS	2
51	0402120	WASHER, 3/8 SS	16
52	0402121	LKWASHER, 3/8 SS	8
53	0402122	NUT, 3/8-16 HEX SS	8
54	0724476	PAD - NYLATRON - BBOM GUIDE	4
55	0726593	APNL-DCV LWR CTL PNL, 3 WINCH	2
56	0726594	APNL-DCV UPR LH CTL PNL,3WNCH	1
57	0726595	APNL-DCV UPR RH CTL PNL,3WNCH	1
58	0910787	STINGER ASSY - EURO - 144"	1
59	0910973	LH JACK LEG ASSY -FLIPPER FEET	1
60	0910974	RH JACK LEG ASSY -FLIPPER FEET	1
61	0911010	RECOVERY BOOM INSTALL V-70	1
62	0911804	AIR REGULATOR-GAUGE ASSEMBLY	2
63	0912015	SUBFRAME ASSY V70-100 STDWINCH	1
64	9010520	FITTING-ELBOW 1/4T-1/4NPT	4
65	9011053	FITTING, BRASS 1/4 TUBE-1/4 MP	1
66	9016815	MUNCIE PUMP TSPKS17-17-2BSSB	1
67	9024041	SWITCH, ROCKER SPST RED 12V21A	9
68	9041403	1/2 NC X 1 1/2 HHCS PL GR8	14
69	916770001	HOSE- HYD. 3/8 - 105" 8MJ-6MFA	1
70	920400005	MUD FLAP BRACE PLATE	1
71	9402970	TOOLBOX MTG. PAD	14
72	942480011	PLATE,SLOT-SS REAR WASHER TBOX	14
73	942480300	MTG ANGLE WELD'T LH - DCV COV.	2
74	942487300	MTG ANGLE WELD'T RH - DCV COV.	2
75	94320052	MUD FLAP 920-940 RUBBER	2
76	945770002	6AT2(6T90S-8MJ) HCL 48	2
77	945770003	6AT2(6T90L-8MJ) 24 HYD	4
78	946210500	TUBE, FRONT MTG WELD'T	1
79	946770003	HOSE ASSEMBLY - 8MJ-8MJ X 45	4
80	946770006	HOSE ASSEMBLY - 62	1
81	946770007	HOSE ASSEMBLY - 79	1
82	946770009	HOSE ASSEMBLY - 104	1
83	948570000	5X5 LIFT BAR ASSEMBLY 948 XHD	1

09008489, BUA V70 2-WINCH JACK LEG FLIPPER FEET (cont'd)

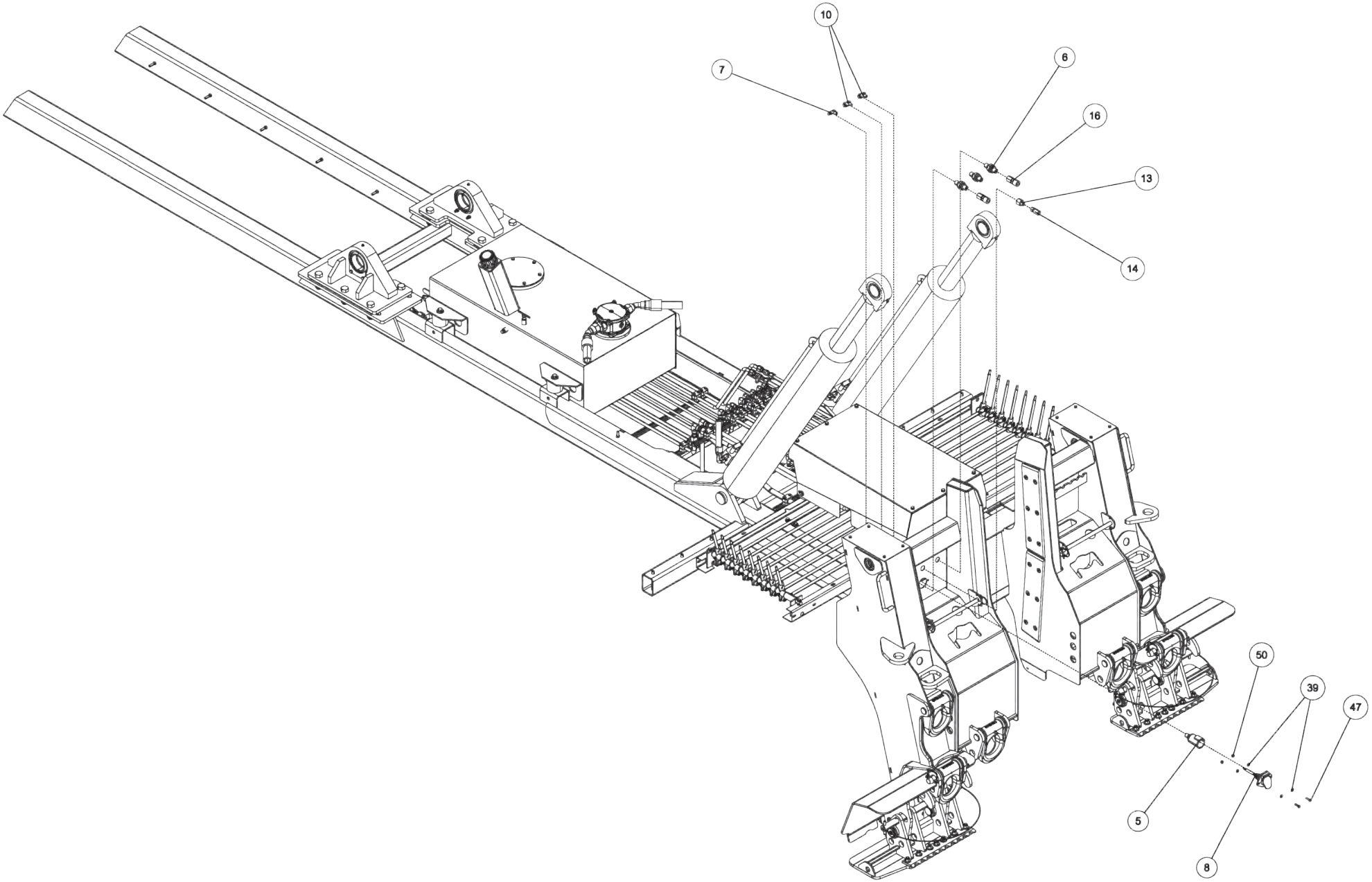

09008489, BUA V70 2-WINCH JACK LEG FLIPPER FEET (cont'd)

ITEM	PART NUMBER	DESCRIPTION	QTY
--	09008489	BUA V70 2W JL FLIPPER FEET	
1	0300341	KNOB, BLACK (BLANK)	12
2	0300364	CLAMP-HOSE,0.875"-2.75" 50"LBS	8
3	0301473	HOSE HYD, 18" LG	4
4	0301696	FITTING, ELB 90 DEG 6MJ-6FJX90	4
5	0301909	RECEPTACLE BOOT	1
6	0301946	FITTING, BLKHD CONNECT	3
7	0301947	FITTING, 45 DEG ADAPTER	1
8	0301948	HD 7 WAY TRAILER CONNECT	1
9	0302205	GAUGE, FLUSH MNTG-6000 PSI	4
10	0302534	FITTING, 45 DEG ELBOW	2
11	0302698	FITTING, HOSE BARB,1-1/4	2
12	0302901	HOSE HYD, 120" 12C12	2
13	0303538	FITT, ADAPTER -BRASS 8FP-6MP	1
14	0303539	QUICK DISCONNECT 3/8 FPT	1
15	0303948	ELBOW, 12MJ-16MB90	2
16	0304363	QUICK DISCONNECT 1/2 FPT	2
17	0306539	HOSE BARB 20HOSE16MB90	2
18	0306983	FITT-MALE RUNTEE 1/4T-1/4NPT	1
19	0307216	LIGHT, AMBER LED RECT 5.25X3.3	2
20	0307538	LIGHT, MRKR-RED LED 4.5 X 1.63	4
21	0307604	KNOB, RED LONG - SK0700-07	4
22	0307778	PLUG, FILLER	2
23	0310010	SUCTION HOSE,1-1/4ID X50 100R4	1
24	0310944	LH 200 CB TDM ALM BDY ‘10 VULC	1
25	0310945	RH 200 CB TDM ALM BDY ‘10 VULC	1
26	0311355	HOBBS HOURMETER	1
27	0311502	LIGHT 6"OVAL CLEAR-AMBER LED	6
28	0311503	GROMMET, LIGHT 6" OVAL	6
29	0311508	LED RECT RED STOP-CLEAR-12/24V	4
30	0311510	LIGHT RECT 12V REVERSE REFLEX	2
31	0311511	GROMMET, TAIL LIGHT, RECTANGULAR	8
32	0311755	WATER SEPARATOR-MONNIER	1
33	04000381	SS BHSCS 1/4-20 X 1	16
34	0400070	SCREW, 1/4-20X1 HHC GR5	6
35	0400128	SCREW, 3/8-16X1-1/4 FHS GR8 BO	24
36	0400369	NUT, 1/4 SPR J	8
37	0400393	NUT, 3/8-16 JAM	16
38	0400451	WASHER, 1/4	6
39	0400454	WASHER, 1/4 SS	22
40	0400491	LKWASHER, 1/2	14
41	0400498	WASHER, 1/2X2X0.125	14

ITEM	PART NUMBER	DESCRIPTION	QTY
42	0400687	SCREW, 10-24X3/4 PRH SS	4
43	0400816	WASHER, M10 SS	4
44	0401054	SCREW, 8-32X3/4 PRH SS	12
45	0402002	NUT, 8-32 LOK EXT SS	12
46	0402020	SCREW, 1/4-20X3/4 HHC SS	2
47	0402021	SCREW, 1/4-20X1 HHC SS	2
48	0402043	SCREW, 3/8-16X1-1/4 HHC SS	8
49	0402111	LKWASHER, 1/4 SS	18
50	0402113	NUT, 1/4-20 LOK SS	2
51	0402120	WASHER, 3/8 SS	16
52	0402121	LKWASHER, 3/8 SS	8
53	0402122	NUT, 3/8-16 HEX SS	8
54	0724476	PAD - NYLATRON - BBOM GUIDE	4
55	0726593	APNL-DCV LWR CTL PNL, 3 WINCH	2
56	0726594	APNL-DCV UPR LH CTL PNL,3WNCH	1
57	0726595	APNL-DCV UPR RH CTL PNL,3WNCH	1
58	0910787	STINGER ASSY - EURO - 144"	1
59	0910973	LH JACK LEG ASSY -FLIPPER FEET	1
60	0910974	RH JACK LEG ASSY -FLIPPER FEET	1
61	0911010	RECOVERY BOOM INSTALL V-70	1
62	0911804	AIR REGULATOR-GAUGE ASSEMBLY	2
63	0912015	SUBFRAME ASSY V70-100 STDWINCH	1
64	9010520	FITTING-ELBOW 1/4T-1/4NPT	4
65	9011053	FITTING, BRASS 1/4 TUBE-1/4 MP	1
66	9016815	MUNCIE PUMP TSPKS17-17-2BSSB	1
67	9024041	SWITCH, ROCKER SPST RED 12V21A	9
68	9041403	1/2 NC X 1 1/2 HHCS PL GR8	14
69	916770001	HOSE- HYD. 3/8 - 105" 8MJ-6MFA	1
70	920400005	MUD FLAP BRACE PLATE	1
71	9402970	TOOLBOX MTG. PAD	14
72	942480011	PLATE,SLOT-SS REAR WASHER TBOX	14
73	942480300	MTG ANGLE WELD'T LH - DCV COV.	2
74	942487300	MTG ANGLE WELD'T RH - DCV COV.	2
75	94320052	MUD FLAP 920-940 RUBBER	2
76	945770002	6AT2(6T90S-8MJ) HCL 48	2
77	945770003	6AT2(6T90L-8MJ) 24 HYD	4
78	946210500	TUBE, FRONT MTG WELD'T	1
79	946770003	HOSE ASSEMBLY - 8MJ-8MJ X 45	4
80	946770006	HOSE ASSEMBLY - 62	1
81	946770007	HOSE ASSEMBLY - 79	1
82	946770009	HOSE ASSEMBLY - 104	1
83	948570000	5X5 LIFT BAR ASSEMBLY 948 XHD	1

09008489, BUA V70 2-WINCH JACK LEG FLIPPER FEET (cont'd)

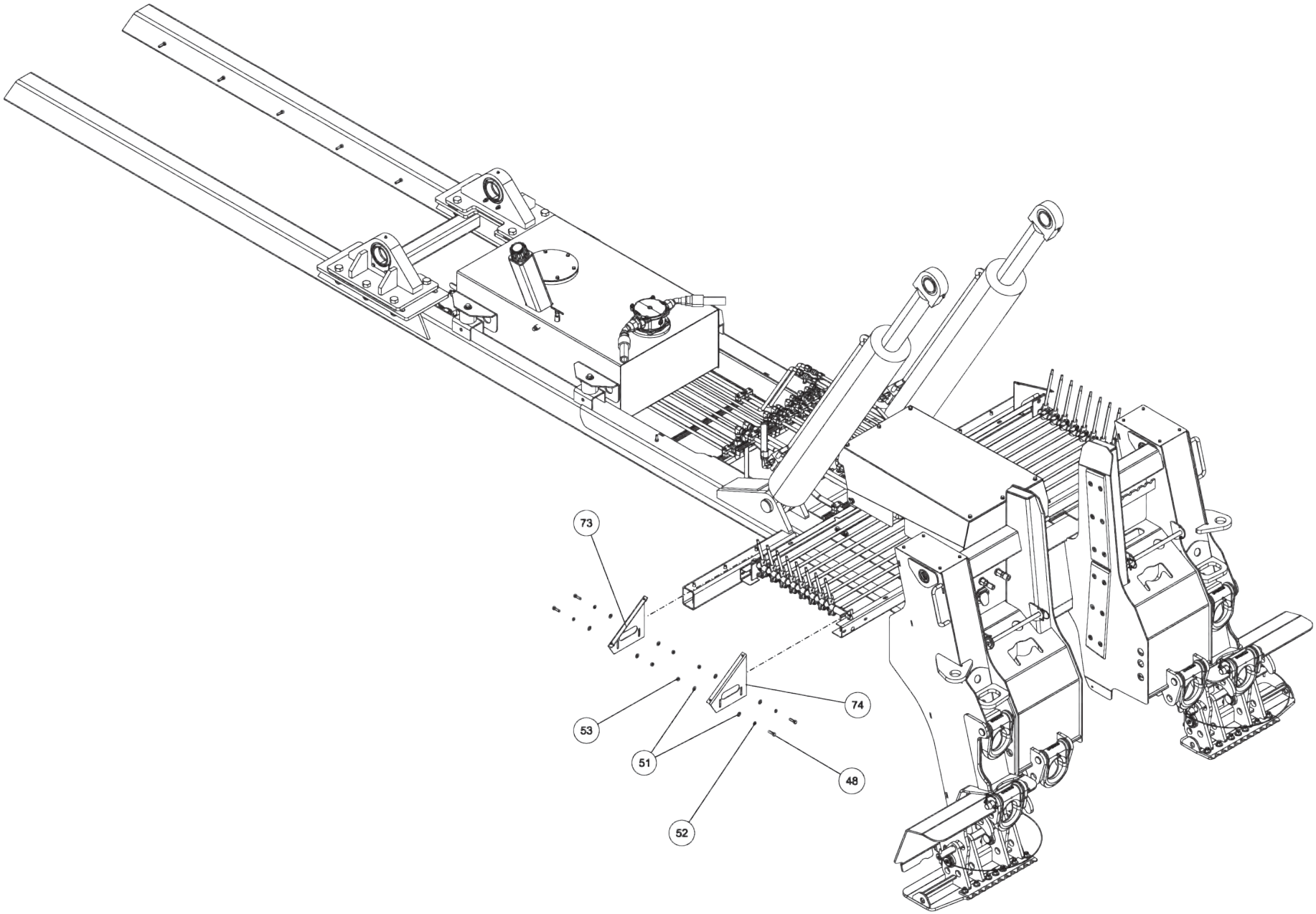

09008489, BUA V70 2-WINCH JACK LEG FLIPPER FEET (cont'd)

ITEM	PART NUMBER	DESCRIPTION	QTY
--	09008489	BUA V70 2W JL FLIPPER FEET	
1	0300341	KNOB, BLACK (BLANK)	12
2	0300364	CLAMP-HOSE,0.875"-2.75" 50"LBS	8
3	0301473	HOSE HYD, 18" LG	4
4	0301696	FITTING, ELB 90 DEG 6MJ-6FJX90	4
5	0301909	RECEPTACLE BOOT	1
6	0301946	FITTING, BLKHD CONNECT	3
7	0301947	FITTING, 45 DEG ADAPTER	1
8	0301948	HD 7 WAY TRAILER CONNECT	1
9	0302205	GAUGE, FLUSH MNTG-6000 PSI	4
10	0302534	FITTING, 45 DEG ELBOW	2
11	0302698	FITTING, HOSE BARB,1-1/4	2
12	0302901	HOSE HYD, 120" 12C12	2
13	0303538	FITT, ADAPTER -BRASS 8FP-6MP	1
14	0303539	QUICK DISCONNECT 3/8 FPT	1
15	0303948	ELBOW, 12MJ-16MB90	2
16	0304363	QUICK DISCONNECT 1/2 FPT	2
17	0306539	HOSE BARB 20HOSE16MB90	2
18	0306983	FITT-MALE RUNTEE 1/4T-1/4NPT	1
19	0307216	LIGHT, AMBER LED RECT 5.25X3.3	2
20	0307538	LIGHT, MRKR-RED LED 4.5 X 1.63	4
21	0307604	KNOB, RED LONG - SK0700-07	4
22	0307778	PLUG, FILLER	2
23	0310010	SUCTION HOSE,1-1/4ID X50 100R4	1
24	0310944	LH 200 CB TDM ALM BDY ‘10 VULC	1
25	0310945	RH 200 CB TDM ALM BDY ‘10 VULC	1
26	0311355	HOBBS HOURMETER	1
27	0311502	LIGHT 6"OVAL CLEAR-AMBER LED	6
28	0311503	GROMMET, LIGHT 6" OVAL	6
29	0311508	LED RECT RED STOP-CLEAR-12/24V	4
30	0311510	LIGHT RECT 12V REVERSE REFLEX	2
31	0311511	GROMMET, TAIL LIGHT, RECTANGULAR	8
32	0311755	WATER SEPARATOR-MONNIER	1
33	04000381	SS BHSCS 1/4-20 X 1	16
34	0400070	SCREW, 1/4-20X1 HHC GR5	6
35	0400128	SCREW, 3/8-16X1-1/4 FHS GR8 BO	24
36	0400369	NUT, 1/4 SPR J	8
37	0400393	NUT, 3/8-16 JAM	16
38	0400451	WASHER, 1/4	6
39	0400454	WASHER, 1/4 SS	22
40	0400491	LKWASHER, 1/2	14
41	0400498	WASHER, 1/2X2X0.125	14

ITEM	PART NUMBER	DESCRIPTION	QTY
42	0400687	SCREW, 10-24X3/4 PRH SS	4
43	0400816	WASHER, M10 SS	4
44	0401054	SCREW, 8-32X3/4 PRH SS	12
45	0402002	NUT, 8-32 LOK EXT SS	12
46	0402020	SCREW, 1/4-20X3/4 HHC SS	2
47	0402021	SCREW, 1/4-20X1 HHC SS	2
48	0402043	SCREW, 3/8-16X1-1/4 HHC SS	8
49	0402111	LKWASHER, 1/4 SS	18
50	0402113	NUT, 1/4-20 LOK SS	2
51	0402120	WASHER, 3/8 SS	16
52	0402121	LKWASHER, 3/8 SS	8
53	0402122	NUT, 3/8-16 HEX SS	8
54	0724476	PAD - NYLATRON - BBOM GUIDE	4
55	0726593	APNL-DCV LWR CTL PNL, 3 WINCH	2
56	0726594	APNL-DCV UPR LH CTL PNL,3WNCH	1
57	0726595	APNL-DCV UPR RH CTL PNL,3WNCH	1
58	0910787	STINGER ASSY - EURO - 144"	1
59	0910973	LH JACK LEG ASSY -FLIPPER FEET	1
60	0910974	RH JACK LEG ASSY -FLIPPER FEET	1
61	0911010	RECOVERY BOOM INSTALL V-70	1
62	0911804	AIR REGULATOR-GAUGE ASSEMBLY	2
63	0912015	SUBFRAME ASSY V70-100 STDWINCH	1
64	9010520	FITTING-ELBOW 1/4T-1/4NPT	4
65	9011053	FITTING, BRASS 1/4 TUBE-1/4 MP	1
66	9016815	MUNCIE PUMP TSPKS17-17-2BSSB	1
67	9024041	SWITCH, ROCKER SPST RED 12V21A	9
68	9041403	1/2 NC X 1 1/2 HHCS PL GR8	14
69	916770001	HOSE- HYD. 3/8 - 105" 8MJ-6MFA	1
70	920400005	MUD FLAP BRACE PLATE	1
71	9402970	TOOLBOX MTG. PAD	14
72	942480011	PLATE,SLOT-SS REAR WASHER TBOX	14
73	942480300	MTG ANGLE WELD'T LH - DCV COV.	2
74	942487300	MTG ANGLE WELD'T RH - DCV COV.	2
75	94320052	MUD FLAP 920-940 RUBBER	2
76	945770002	6AT2(6T90S-8MJ) HCL 48	2
77	945770003	6AT2(6T90L-8MJ) 24 HYD	4
78	946210500	TUBE, FRONT MTG WELD'T	1
79	946770003	HOSE ASSEMBLY - 8MJ-8MJ X 45	4
80	946770006	HOSE ASSEMBLY - 62	1
81	946770007	HOSE ASSEMBLY - 79	1
82	946770009	HOSE ASSEMBLY - 104	1
83	948570000	5X5 LIFT BAR ASSEMBLY 948 XHD	1

09008489, BUA V70 2-WINCH JACK LEG FLIPPER FEET (cont'd)

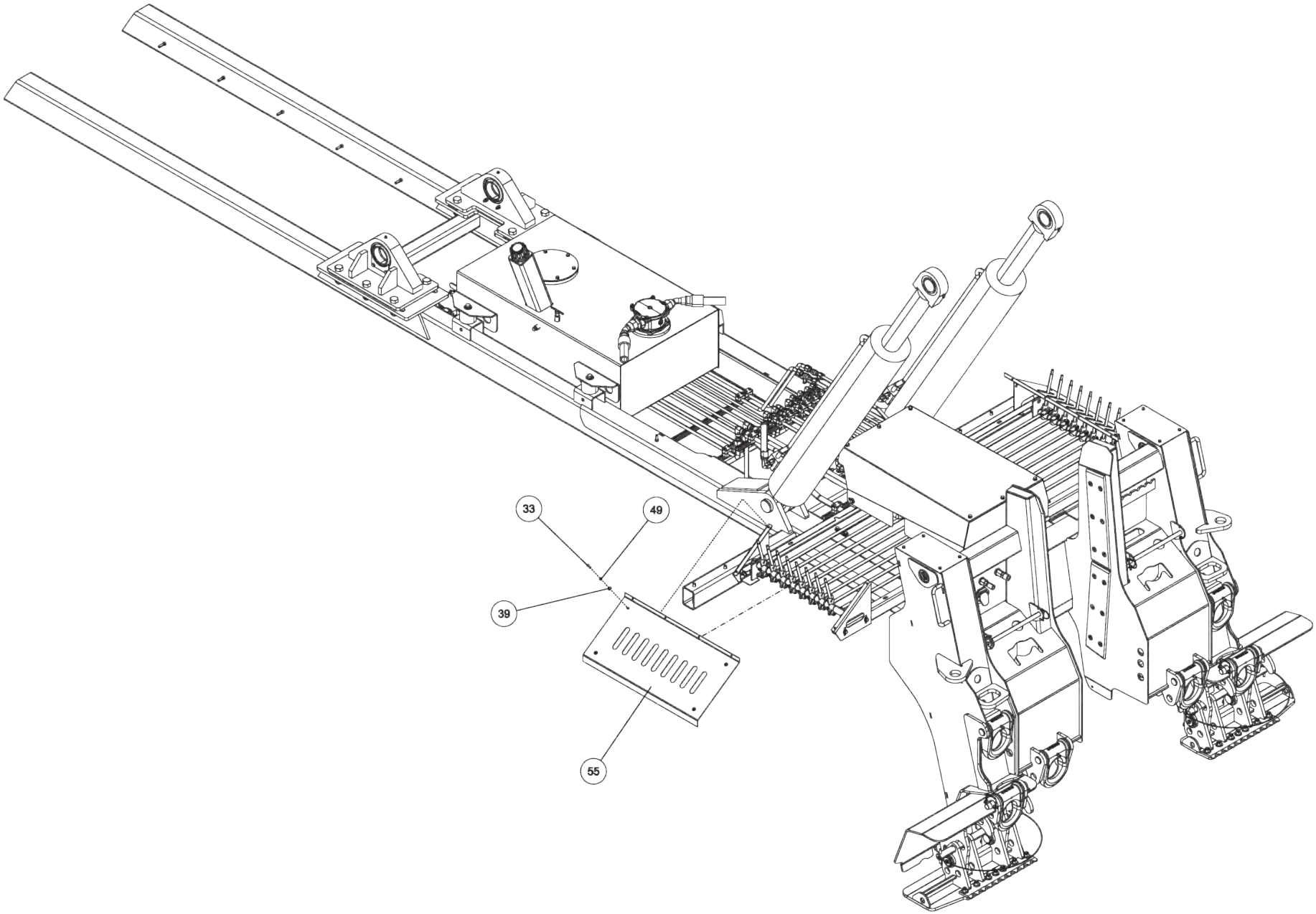

09008489, BUA V70 2-WINCH JACK LEG FLIPPER FEET (cont'd)

ITEM	PART NUMBER	DESCRIPTION	QTY
--	09008489	BUA V70 2W JL FLIPPER FEET	
1	0300341	KNOB, BLACK (BLANK)	12
2	0300364	CLAMP-HOSE,0.875"-2.75" 50"LBS	8
3	0301473	HOSE HYD, 18" LG	4
4	0301696	FITTING, ELB 90 DEG 6MJ-6FJX90	4
5	0301909	RECEPTACLE BOOT	1
6	0301946	FITTING, BLKHD CONNECT	3
7	0301947	FITTING, 45 DEG ADAPTER	1
8	0301948	HD 7 WAY TRAILER CONNECT	1
9	0302205	GAUGE, FLUSH MNTG-6000 PSI	4
10	0302534	FITTING, 45 DEG ELBOW	2
11	0302698	FITTING, HOSE BARB,1-1/4	2
12	0302901	HOSE HYD, 120" 12C12	2
13	0303538	FITT, ADAPTER -BRASS 8FP-6MP	1
14	0303539	QUICK DISCONNECT 3/8 FPT	1
15	0303948	ELBOW, 12MJ-16MB90	2
16	0304363	QUICK DISCONNECT 1/2 FPT	2
17	0306539	HOSE BARB 20HOSE16MB90	2
18	0306983	FITT-MALE RUNTEE 1/4T-1/4NPT	1
19	0307216	LIGHT, AMBER LED RECT 5.25X3.3	2
20	0307538	LIGHT, MRKR-RED LED 4.5 X 1.63	4
21	0307604	KNOB, RED LONG - SK0700-07	4
22	0307778	PLUG, FILLER	2
23	0310010	SUCTION HOSE,1-1/4ID X50 100R4	1
24	0310944	LH 200 CB TDM ALM BDY ‘10 VULC	1
25	0310945	RH 200 CB TDM ALM BDY ‘10 VULC	1
26	0311355	HOBBS HOURMETER	1
27	0311502	LIGHT 6"OVAL CLEAR-AMBER LED	6
28	0311503	GROMMET, LIGHT 6" OVAL	6
29	0311508	LED RECT RED STOP-CLEAR-12/24V	4
30	0311510	LIGHT RECT 12V REVERSE REFLEX	2
31	0311511	GROMMET, TAIL LIGHT, RECTANGULAR	8
32	0311755	WATER SEPARATOR-MONNIER	1
33	04000381	SS BHSCS 1/4-20 X 1	16
34	0400070	SCREW, 1/4-20X1 HHC GR5	6
35	0400128	SCREW, 3/8-16X1-1/4 FHS GR8 BO	24
36	0400369	NUT, 1/4 SPR J	8
37	0400393	NUT, 3/8-16 JAM	16
38	0400451	WASHER, 1/4	6
39	0400454	WASHER, 1/4 SS	22
40	0400491	LKWASHER, 1/2	14
41	0400498	WASHER, 1/2X2X0.125	14

ITEM	PART NUMBER	DESCRIPTION	QTY
42	0400687	SCREW, 10-24X3/4 PRH SS	4
43	0400816	WASHER, M10 SS	4
44	0401054	SCREW, 8-32X3/4 PRH SS	12
45	0402002	NUT, 8-32 LOK EXT SS	12
46	0402020	SCREW, 1/4-20X3/4 HHC SS	2
47	0402021	SCREW, 1/4-20X1 HHC SS	2
48	0402043	SCREW, 3/8-16X1-1/4 HHC SS	8
49	0402111	LKWASHER, 1/4 SS	18
50	0402113	NUT, 1/4-20 LOK SS	2
51	0402120	WASHER, 3/8 SS	16
52	0402121	LKWASHER, 3/8 SS	8
53	0402122	NUT, 3/8-16 HEX SS	8
54	0724476	PAD - NYLATRON - BBOM GUIDE	4
55	0726593	APNL-DCV LWR CTL PNL, 3 WINCH	2
56	0726594	APNL-DCV UPR LH CTL PNL,3WNCH	1
57	0726595	APNL-DCV UPR RH CTL PNL,3WNCH	1
58	0910787	STINGER ASSY - EURO - 144"	1
59	0910973	LH JACK LEG ASSY -FLIPPER FEET	1
60	0910974	RH JACK LEG ASSY -FLIPPER FEET	1
61	0911010	RECOVERY BOOM INSTALL V-70	1
62	0911804	AIR REGULATOR-GAUGE ASSEMBLY	2
63	0912015	SUBFRAME ASSY V70-100 STDWINCH	1
64	9010520	FITTING-ELBOW 1/4T-1/4NPT	4
65	9011053	FITTING, BRASS 1/4 TUBE-1/4 MP	1
66	9016815	MUNCIE PUMP TSPKS17-17-2BSSB	1
67	9024041	SWITCH, ROCKER SPST RED 12V21A	9
68	9041403	1/2 NC X 1 1/2 HHCS PL GR8	14
69	916770001	HOSE- HYD. 3/8 - 105" 8MJ-6MFA	1
70	920400005	MUD FLAP BRACE PLATE	1
71	9402970	TOOLBOX MTG. PAD	14
72	942480011	PLATE,SLOT-SS REAR WASHER TBOX	14
73	942480300	MTG ANGLE WELD'T LH - DCV COV.	2
74	942487300	MTG ANGLE WELD'T RH - DCV COV.	2
75	94320052	MUD FLAP 920-940 RUBBER	2
76	945770002	6AT2(6T90S-8MJ) HCL 48	2
77	945770003	6AT2(6T90L-8MJ) 24 HYD	4
78	946210500	TUBE, FRONT MTG WELD'T	1
79	946770003	HOSE ASSEMBLY - 8MJ-8MJ X 45	4
80	946770006	HOSE ASSEMBLY - 62	1
81	946770007	HOSE ASSEMBLY - 79	1
82	946770009	HOSE ASSEMBLY - 104	1
83	948570000	5X5 LIFT BAR ASSEMBLY 948 XHD	1

09008489, BUA V70 2-WINCH JACK LEG FLIPPER FEET (cont'd)

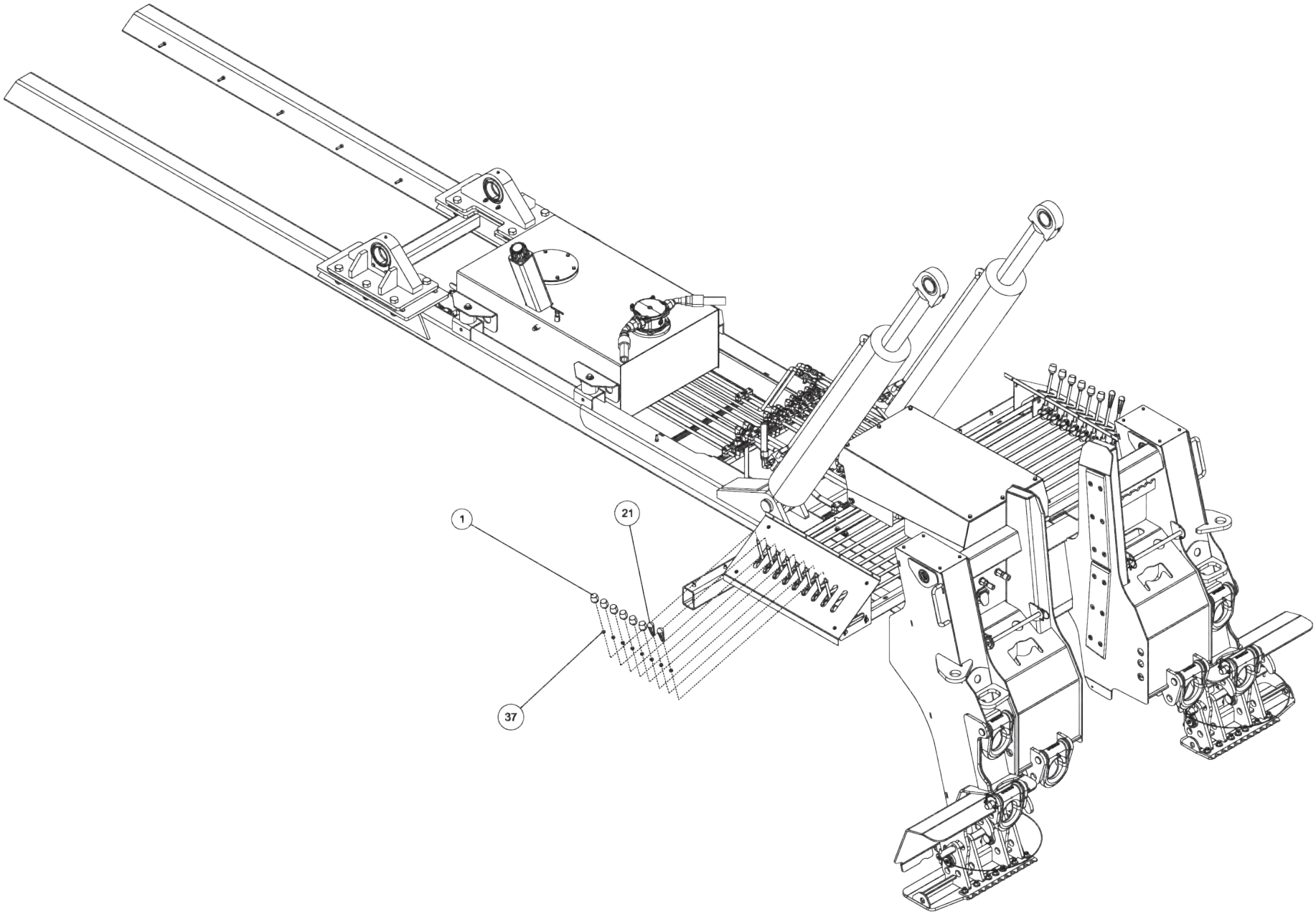

09008489, BUA V70 2-WINCH JACK LEG FLIPPER FEET (cont'd)

ITEM	PART NUMBER	DESCRIPTION	QTY
--	09008489	BUA V70 2W JL FLIPPER FEET	
1	0300341	KNOB, BLACK (BLANK)	12
2	0300364	CLAMP-HOSE,0.875"-2.75" 50"LBS	8
3	0301473	HOSE HYD, 18" LG	4
4	0301696	FITTING, ELB 90 DEG 6MJ-6FJX90	4
5	0301909	RECEPTACLE BOOT	1
6	0301946	FITTING, BLKHD CONNECT	3
7	0301947	FITTING, 45 DEG ADAPTER	1
8	0301948	HD 7 WAY TRAILER CONNECT	1
9	0302205	GAUGE, FLUSH MNTG-6000 PSI	4
10	0302534	FITTING, 45 DEG ELBOW	2
11	0302698	FITTING, HOSE BARB,1-1/4	2
12	0302901	HOSE HYD, 120" 12C12	2
13	0303538	FITT, ADAPTER -BRASS 8FP-6MP	1
14	0303539	QUICK DISCONNECT 3/8 FPT	1
15	0303948	ELBOW, 12MJ-16MB90	2
16	0304363	QUICK DISCONNECT 1/2 FPT	2
17	0306539	HOSE BARB 20HOSE16MB90	2
18	0306983	FITT-MALE RUNTEE 1/4T-1/4NPT	1
19	0307216	LIGHT, AMBER LED RECT 5.25X3.3	2
20	0307538	LIGHT, MRKR-RED LED 4.5 X 1.63	4
21	0307604	KNOB, RED LONG - SK0700-07	4
22	0307778	PLUG, FILLER	2
23	0310010	SUCTION HOSE,1-1/4ID X50 100R4	1
24	0310944	LH 200 CB TDM ALM BDY ‘10 VULC	1
25	0310945	RH 200 CB TDM ALM BDY ‘10 VULC	1
26	0311355	HOBBS HOURMETER	1
27	0311502	LIGHT 6"OVAL CLEAR-AMBER LED	6
28	0311503	GROMMET, LIGHT 6" OVAL	6
29	0311508	LED RECT RED STOP-CLEAR-12/24V	4
30	0311510	LIGHT RECT 12V REVERSE REFLEX	2
31	0311511	GROMMET, TAIL LIGHT, RECTANGULAR	8
32	0311755	WATER SEPARATOR-MONNIER	1
33	04000381	SS BHSCS 1/4-20 X 1	16
34	0400070	SCREW, 1/4-20X1 HHC GR5	6
35	0400128	SCREW, 3/8-16X1-1/4 FHS GR8 BO	24
36	0400369	NUT, 1/4 SPR J	8
37	0400393	NUT, 3/8-16 JAM	16
38	0400451	WASHER, 1/4	6
39	0400454	WASHER, 1/4 SS	22
40	0400491	LKWASHER, 1/2	14
41	0400498	WASHER, 1/2X2X0.125	14

ITEM	PART NUMBER	DESCRIPTION	QTY
42	0400687	SCREW, 10-24X3/4 PRH SS	4
43	0400816	WASHER, M10 SS	4
44	0401054	SCREW, 8-32X3/4 PRH SS	12
45	0402002	NUT, 8-32 LOK EXT SS	12
46	0402020	SCREW, 1/4-20X3/4 HHC SS	2
47	0402021	SCREW, 1/4-20X1 HHC SS	2
48	0402043	SCREW, 3/8-16X1-1/4 HHC SS	8
49	0402111	LKWASHER, 1/4 SS	18
50	0402113	NUT, 1/4-20 LOK SS	2
51	0402120	WASHER, 3/8 SS	16
52	0402121	LKWASHER, 3/8 SS	8
53	0402122	NUT, 3/8-16 HEX SS	8
54	0724476	PAD - NYLATRON - BBOM GUIDE	4
55	0726593	APNL-DCV LWR CTL PNL, 3 WINCH	2
56	0726594	APNL-DCV UPR LH CTL PNL,3WNCH	1
57	0726595	APNL-DCV UPR RH CTL PNL,3WNCH	1
58	0910787	STINGER ASSY - EURO - 144"	1
59	0910973	LH JACK LEG ASSY -FLIPPER FEET	1
60	0910974	RH JACK LEG ASSY -FLIPPER FEET	1
61	0911010	RECOVERY BOOM INSTALL V-70	1
62	0911804	AIR REGULATOR-GAUGE ASSEMBLY	2
63	0912015	SUBFRAME ASSY V70-100 STDWINCH	1
64	9010520	FITTING-ELBOW 1/4T-1/4NPT	4
65	9011053	FITTING, BRASS 1/4 TUBE-1/4 MP	1
66	9016815	MUNCIE PUMP TSPKS17-17-2BSSB	1
67	9024041	SWITCH, ROCKER SPST RED 12V21A	9
68	9041403	1/2 NC X 1 1/2 HHCS PL GR8	14
69	916770001	HOSE- HYD. 3/8 - 105" 8MJ-6MFA	1
70	920400005	MUD FLAP BRACE PLATE	1
71	9402970	TOOLBOX MTG. PAD	14
72	942480011	PLATE,SLOT-SS REAR WASHER TBOX	14
73	942480300	MTG ANGLE WELD'T LH - DCV COV.	2
74	942487300	MTG ANGLE WELD'T RH - DCV COV.	2
75	94320052	MUD FLAP 920-940 RUBBER	2
76	945770002	6AT2(6T90S-8MJ) HCL 48	2
77	945770003	6AT2(6T90L-8MJ) 24 HYD	4
78	946210500	TUBE, FRONT MTG WELD'T	1
79	946770003	HOSE ASSEMBLY - 8MJ-8MJ X 45	4
80	946770006	HOSE ASSEMBLY - 62	1
81	946770007	HOSE ASSEMBLY - 79	1
82	946770009	HOSE ASSEMBLY - 104	1
83	948570000	5X5 LIFT BAR ASSEMBLY 948 XHD	1

09008489, BUA V70 2-WINCH JACK LEG FLIPPER FEET (cont'd)

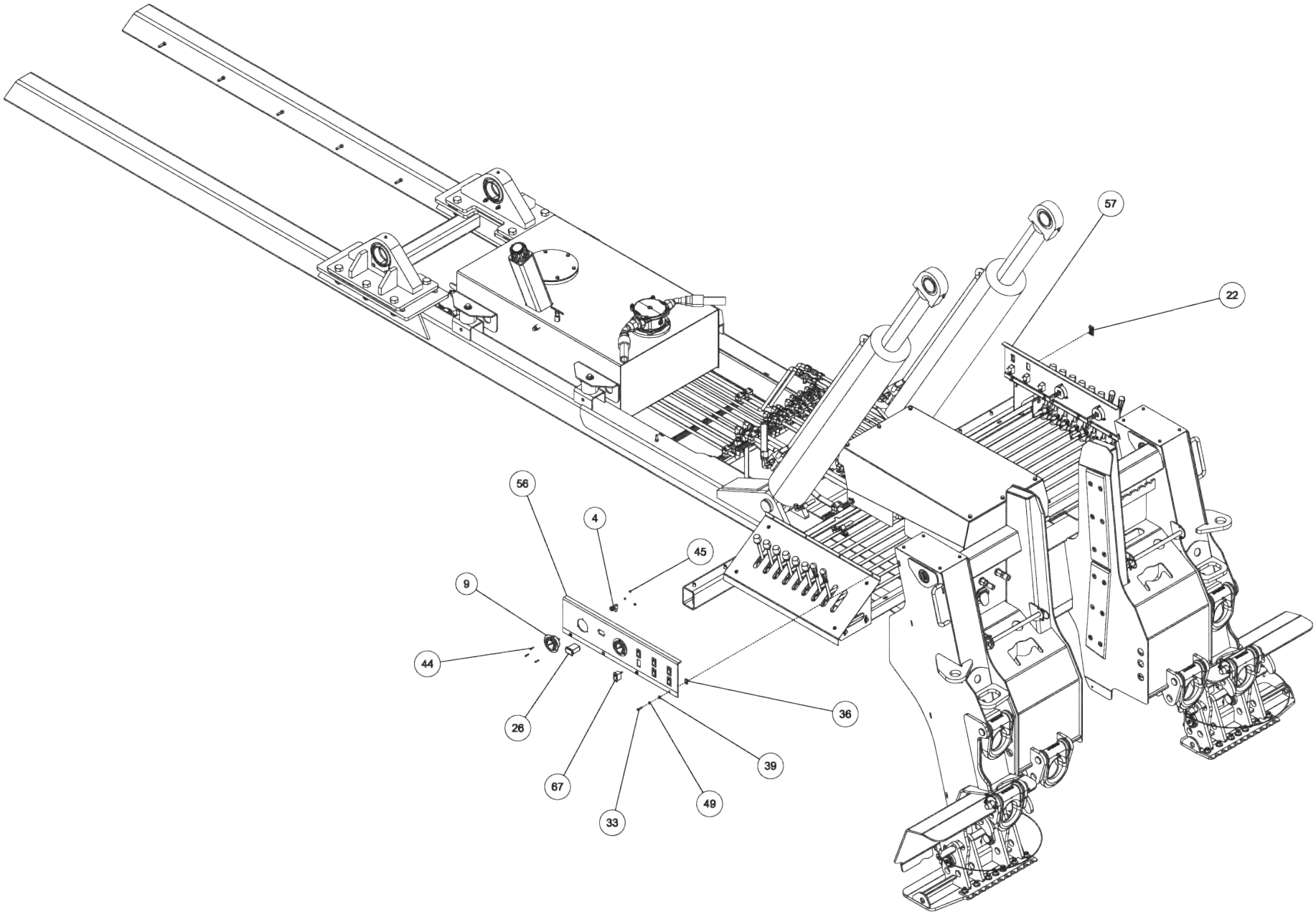

09008489, BUA V70 2-WINCH JACK LEG FLIPPER FEET (cont'd)

ITEM	PART NUMBER	DESCRIPTION	QTY
--	09008489	BUA V70 2W JL FLIPPER FEET	
1	0300341	KNOB, BLACK (BLANK)	12
2	0300364	CLAMP-HOSE,0.875"-2.75" 50"LBS	8
3	0301473	HOSE HYD, 18" LG	4
4	0301696	FITTING, ELB 90 DEG 6MJ-6FJX90	4
5	0301909	RECEPTACLE BOOT	1
6	0301946	FITTING, BLKHD CONNECT	3
7	0301947	FITTING, 45 DEG ADAPTER	1
8	0301948	HD 7 WAY TRAILER CONNECT	1
9	0302205	GAUGE, FLUSH MNTG-6000 PSI	4
10	0302534	FITTING, 45 DEG ELBOW	2
11	0302698	FITTING, HOSE BARB,1-1/4	2
12	0302901	HOSE HYD, 120" 12C12	2
13	0303538	FITT, ADAPTER -BRASS 8FP-6MP	1
14	0303539	QUICK DISCONNECT 3/8 FPT	1
15	0303948	ELBOW, 12MJ-16MB90	2
16	0304363	QUICK DISCONNECT 1/2 FPT	2
17	0306539	HOSE BARB 20HOSE16MB90	2
18	0306983	FITT-MALE RUNTEE 1/4T-1/4NPT	1
19	0307216	LIGHT, AMBER LED RECT 5.25X3.3	2
20	0307538	LIGHT, MRKR-RED LED 4.5 X 1.63	4
21	0307604	KNOB, RED LONG - SK0700-07	4
22	0307778	PLUG, FILLER	2
23	0310010	SUCTION HOSE,1-1/4ID X50 100R4	1
24	0310944	LH 200 CB TDM ALM BDY ‘10 VULC	1
25	0310945	RH 200 CB TDM ALM BDY ‘10 VULC	1
26	0311355	HOBBS HOURMETER	1
27	0311502	LIGHT 6"OVAL CLEAR-AMBER LED	6
28	0311503	GROMMET, LIGHT 6" OVAL	6
29	0311508	LED RECT RED STOP-CLEAR-12/24V	4
30	0311510	LIGHT RECT 12V REVERSE REFLEX	2
31	0311511	GROMMET, TAIL LIGHT, RECTANGULAR	8
32	0311755	WATER SEPARATOR-MONNIER	1
33	04000381	SS BHSCS 1/4-20 X 1	16
34	0400070	SCREW, 1/4-20X1 HHC GR5	6
35	0400128	SCREW, 3/8-16X1-1/4 FHS GR8 BO	24
36	0400369	NUT, 1/4 SPR J	8
37	0400393	NUT, 3/8-16 JAM	16
38	0400451	WASHER, 1/4	6
39	0400454	WASHER, 1/4 SS	22
40	0400491	LKWASHER, 1/2	14
41	0400498	WASHER, 1/2X2X0.125	14

ITEM	PART NUMBER	DESCRIPTION	QTY
42	0400687	SCREW, 10-24X3/4 PRH SS	4
43	0400816	WASHER, M10 SS	4
44	0401054	SCREW, 8-32X3/4 PRH SS	12
45	0402002	NUT, 8-32 LOK EXT SS	12
46	0402020	SCREW, 1/4-20X3/4 HHC SS	2
47	0402021	SCREW, 1/4-20X1 HHC SS	2
48	0402043	SCREW, 3/8-16X1-1/4 HHC SS	8
49	0402111	LKWASHER, 1/4 SS	18
50	0402113	NUT, 1/4-20 LOK SS	2
51	0402120	WASHER, 3/8 SS	16
52	0402121	LKWASHER, 3/8 SS	8
53	0402122	NUT, 3/8-16 HEX SS	8
54	0724476	PAD - NYLATRON - BBOM GUIDE	4
55	0726593	APNL-DCV LWR CTL PNL, 3 WINCH	2
56	0726594	APNL-DCV UPR LH CTL PNL,3WNCH	1
57	0726595	APNL-DCV UPR RH CTL PNL,3WNCH	1
58	0910787	STINGER ASSY - EURO - 144"	1
59	0910973	LH JACK LEG ASSY -FLIPPER FEET	1
60	0910974	RH JACK LEG ASSY -FLIPPER FEET	1
61	0911010	RECOVERY BOOM INSTALL V-70	1
62	0911804	AIR REGULATOR-GAUGE ASSEMBLY	2
63	0912015	SUBFRAME ASSY V70-100 STDWINCH	1
64	9010520	FITTING-ELBOW 1/4T-1/4NPT	4
65	9011053	FITTING, BRASS 1/4 TUBE-1/4 MP	1
66	9016815	MUNCIE PUMP TSPKS17-17-2BSSB	1
67	9024041	SWITCH, ROCKER SPST RED 12V21A	9
68	9041403	1/2 NC X 1 1/2 HHCS PL GR8	14
69	916770001	HOSE- HYD. 3/8 - 105" 8MJ-6MFA	1
70	920400005	MUD FLAP BRACE PLATE	1
71	9402970	TOOLBOX MTG. PAD	14
72	942480011	PLATE,SLOT-SS REAR WASHER TBOX	14
73	942480300	MTG ANGLE WELD'T LH - DCV COV.	2
74	942487300	MTG ANGLE WELD'T RH - DCV COV.	2
75	94320052	MUD FLAP 920-940 RUBBER	2
76	945770002	6AT2(6T90S-8MJ) HCL 48	2
77	945770003	6AT2(6T90L-8MJ) 24 HYD	4
78	946210500	TUBE, FRONT MTG WELD'T	1
79	946770003	HOSE ASSEMBLY - 8MJ-8MJ X 45	4
80	946770006	HOSE ASSEMBLY - 62	1
81	946770007	HOSE ASSEMBLY - 79	1
82	946770009	HOSE ASSEMBLY - 104	1
83	948570000	5X5 LIFT BAR ASSEMBLY 948 XHD	1

09008489, BUA V70 2-WINCH JACK LEG FLIPPER FEET (cont'd)

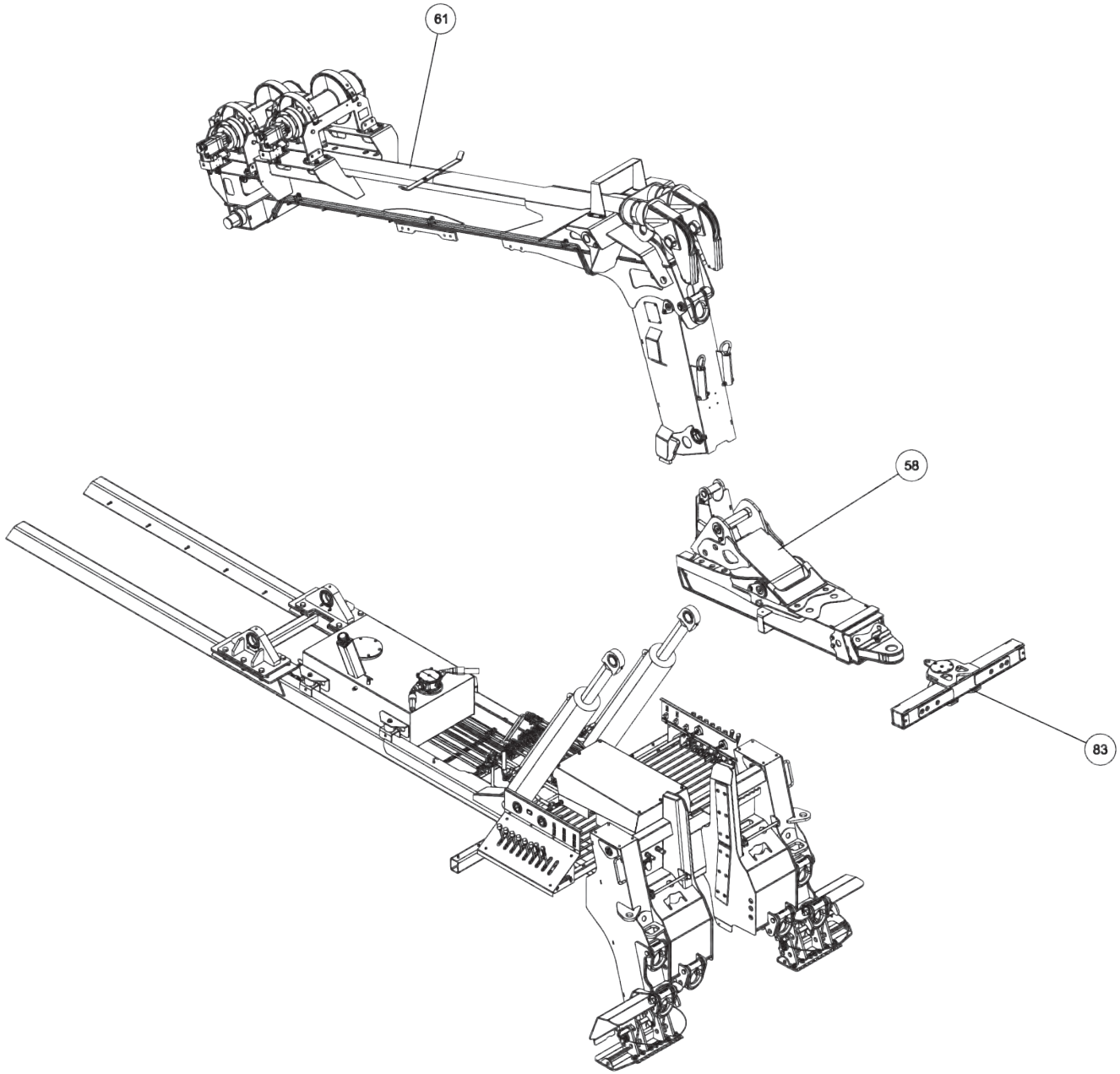

09008489, BUA V70 2-WINCH JACK LEG FLIPPER FEET (cont'd)

ITEM	PART NUMBER	DESCRIPTION	QTY
--	09008489	BUA V70 2W JL FLIPPER FEET	
1	0300341	KNOB, BLACK (BLANK)	12
2	0300364	CLAMP-HOSE,0.875"-2.75" 50"LBS	8
3	0301473	HOSE HYD, 18" LG	4
4	0301696	FITTING, ELB 90 DEG 6MJ-6FJX90	4
5	0301909	RECEPTACLE BOOT	1
6	0301946	FITTING, BLKHD CONNECT	3
7	0301947	FITTING, 45 DEG ADAPTER	1
8	0301948	HD 7 WAY TRAILER CONNECT	1
9	0302205	GAUGE, FLUSH MNTG-6000 PSI	4
10	0302534	FITTING, 45 DEG ELBOW	2
11	0302698	FITTING, HOSE BARB,1-1/4	2
12	0302901	HOSE HYD, 120" 12C12	2
13	0303538	FITT, ADAPTER -BRASS 8FP-6MP	1
14	0303539	QUICK DISCONNECT 3/8 FPT	1
15	0303948	ELBOW, 12MJ-16MB90	2
16	0304363	QUICK DISCONNECT 1/2 FPT	2
17	0306539	HOSE BARB 20HOSE16MB90	2
18	0306983	FITT-MALE RUNTEE 1/4T-1/4NPT	1
19	0307216	LIGHT, AMBER LED RECT 5.25X3.3	2
20	0307538	LIGHT, MRKR-RED LED 4.5 X 1.63	4
21	0307604	KNOB, RED LONG - SK0700-07	4
22	0307778	PLUG, FILLER	2
23	0310010	SUCTION HOSE,1-1/4ID X50 100R4	1
24	0310944	LH 200 CB TDM ALM BDY ‘10 VULC	1
25	0310945	RH 200 CB TDM ALM BDY ‘10 VULC	1
26	0311355	HOBBS HOURMETER	1
27	0311502	LIGHT 6"OVAL CLEAR-AMBER LED	6
28	0311503	GROMMET, LIGHT 6" OVAL	6
29	0311508	LED RECT RED STOP-CLEAR-12/24V	4
30	0311510	LIGHT RECT 12V REVERSE REFLEX	2
31	0311511	GROMMET, TAIL LIGHT, RECTANGULAR	8
32	0311755	WATER SEPARATOR-MONNIER	1
33	04000381	SS BHSCS 1/4-20 X 1	16
34	0400070	SCREW, 1/4-20X1 HHC GR5	6
35	0400128	SCREW, 3/8-16X1-1/4 FHS GR8 BO	24
36	0400369	NUT, 1/4 SPR J	8
37	0400393	NUT, 3/8-16 JAM	16
38	0400451	WASHER, 1/4	6
39	0400454	WASHER, 1/4 SS	22
40	0400491	LKWASHER, 1/2	14
41	0400498	WASHER, 1/2X2X0.125	14

ITEM	PART NUMBER	DESCRIPTION	QTY
42	0400687	SCREW, 10-24X3/4 PRH SS	4
43	0400816	WASHER, M10 SS	4
44	0401054	SCREW, 8-32X3/4 PRH SS	12
45	0402002	NUT, 8-32 LOK EXT SS	12
46	0402020	SCREW, 1/4-20X3/4 HHC SS	2
47	0402021	SCREW, 1/4-20X1 HHC SS	2
48	0402043	SCREW, 3/8-16X1-1/4 HHC SS	8
49	0402111	LKWASHER, 1/4 SS	18
50	0402113	NUT, 1/4-20 LOK SS	2
51	0402120	WASHER, 3/8 SS	16
52	0402121	LKWASHER, 3/8 SS	8
53	0402122	NUT, 3/8-16 HEX SS	8
54	0724476	PAD - NYLATRON - BBOM GUIDE	4
55	0726593	APNL-DCV LWR CTL PNL, 3 WINCH	2
56	0726594	APNL-DCV UPR LH CTL PNL,3WNCH	1
57	0726595	APNL-DCV UPR RH CTL PNL,3WNCH	1
58	0910787	STINGER ASSY - EURO - 144"	1
59	0910973	LH JACK LEG ASSY -FLIPPER FEET	1
60	0910974	RH JACK LEG ASSY -FLIPPER FEET	1
61	0911010	RECOVERY BOOM INSTALL V-70	1
62	0911804	AIR REGULATOR-GAUGE ASSEMBLY	2
63	0912015	SUBFRAME ASSY V70-100 STDWINCH	1
64	9010520	FITTING-ELBOW 1/4T-1/4NPT	4
65	9011053	FITTING, BRASS 1/4 TUBE-1/4 MP	1
66	9016815	MUNCIE PUMP TSPKS17-17-2BSSB	1
67	9024041	SWITCH, ROCKER SPST RED 12V21A	9
68	9041403	1/2 NC X 1 1/2 HHCS PL GR8	14
69	916770001	HOSE- HYD. 3/8 - 105" 8MJ-6MFA	1
70	920400005	MUD FLAP BRACE PLATE	1
71	9402970	TOOLBOX MTG. PAD	14
72	942480011	PLATE,SLOT-SS REAR WASHER TBOX	14
73	942480300	MTG ANGLE WELD'T LH - DCV COV.	2
74	942487300	MTG ANGLE WELD'T RH - DCV COV.	2
75	94320052	MUD FLAP 920-940 RUBBER	2
76	945770002	6AT2(6T90S-8MJ) HCL 48	2
77	945770003	6AT2(6T90L-8MJ) 24 HYD	4
78	946210500	TUBE, FRONT MTG WELD'T	1
79	946770003	HOSE ASSEMBLY - 8MJ-8MJ X 45	4
80	946770006	HOSE ASSEMBLY - 62	1
81	946770007	HOSE ASSEMBLY - 79	1
82	946770009	HOSE ASSEMBLY - 104	1
83	948570000	5X5 LIFT BAR ASSEMBLY 948 XHD	1

09008489, BUA V70 2-WINCH JACK LEG FLIPPER FEET (cont'd)

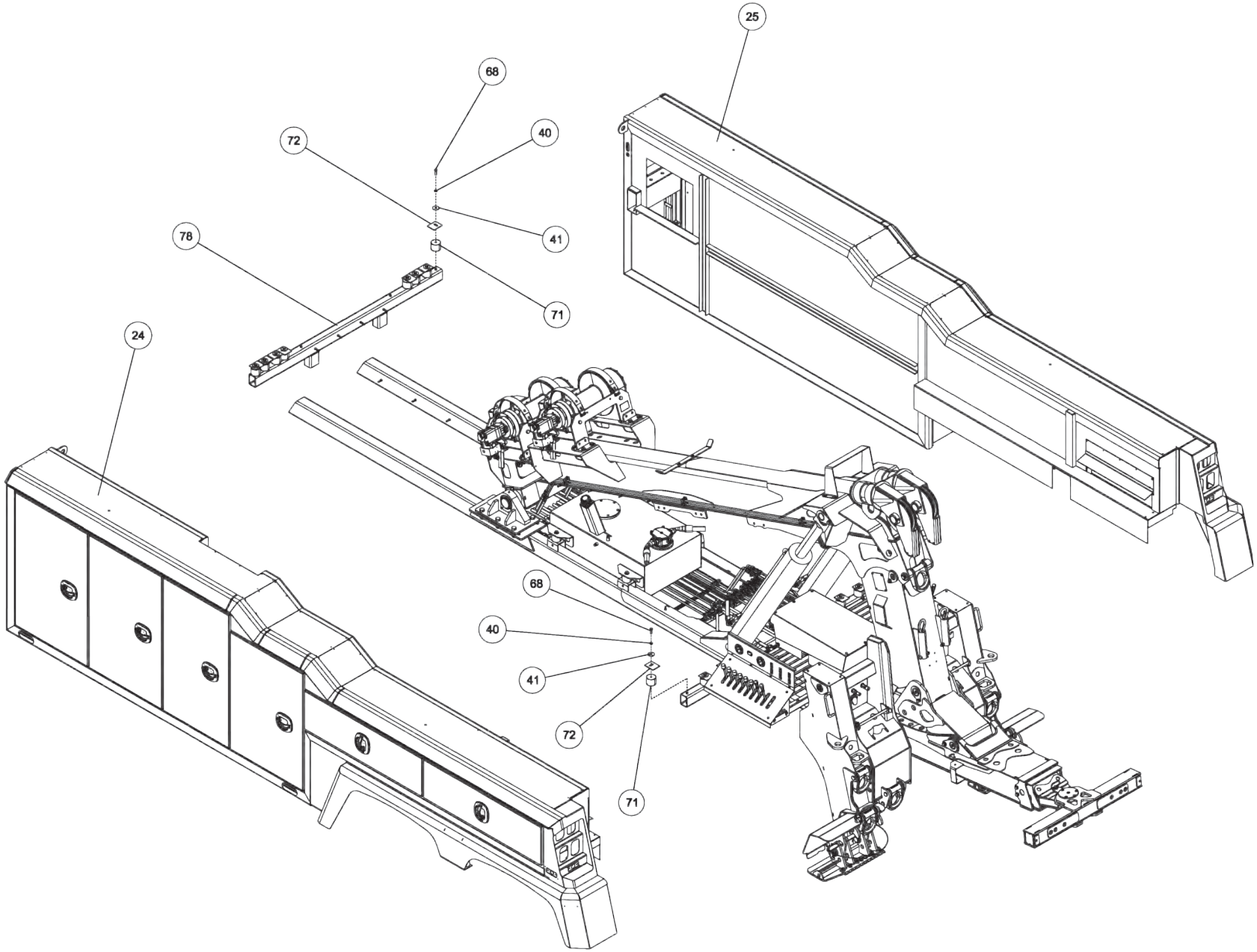

09008489, BUA V70 2-WINCH JACK LEG FLIPPER FEET (cont'd)

ITEM	PART NUMBER	DESCRIPTION	QTY
--	09008489	BUA V70 2W JL FLIPPER FEET	
1	0300341	KNOB, BLACK (BLANK)	12
2	0300364	CLAMP-HOSE,0.875"-2.75" 50"LBS	8
3	0301473	HOSE HYD, 18" LG	4
4	0301696	FITTING, ELB 90 DEG 6MJ-6FJX90	4
5	0301909	RECEPTACLE BOOT	1
6	0301946	FITTING, BLKHD CONNECT	3
7	0301947	FITTING, 45 DEG ADAPTER	1
8	0301948	HD 7 WAY TRAILER CONNECT	1
9	0302205	GAUGE, FLUSH MNTG-6000 PSI	4
10	0302534	FITTING, 45 DEG ELBOW	2
11	0302698	FITTING, HOSE BARB,1-1/4	2
12	0302901	HOSE HYD, 120" 12C12	2
13	0303538	FITT, ADAPTER -BRASS 8FP-6MP	1
14	0303539	QUICK DISCONNECT 3/8 FPT	1
15	0303948	ELBOW, 12MJ-16MB90	2
16	0304363	QUICK DISCONNECT 1/2 FPT	2
17	0306539	HOSE BARB 20HOSE16MB90	2
18	0306983	FITT-MALE RUNTEE 1/4T-1/4NPT	1
19	0307216	LIGHT, AMBER LED RECT 5.25X3.3	2
20	0307538	LIGHT, MRKR-RED LED 4.5 X 1.63	4
21	0307604	KNOB, RED LONG - SK0700-07	4
22	0307778	PLUG, FILLER	2
23	0310010	SUCTION HOSE,1-1/4ID X50 100R4	1
24	0310944	LH 200 CB TDM ALM BDY ‘10 VULC	1
25	0310945	RH 200 CB TDM ALM BDY ‘10 VULC	1
26	0311355	HOBBS HOURMETER	1
27	0311502	LIGHT 6"OVAL CLEAR-AMBER LED	6
28	0311503	GROMMET, LIGHT 6" OVAL	6
29	0311508	LED RECT RED STOP-CLEAR-12/24V	4
30	0311510	LIGHT RECT 12V REVERSE REFLEX	2
31	0311511	GROMMET, TAIL LIGHT, RECTANGULAR	8
32	0311755	WATER SEPARATOR-MONNIER	1
33	04000381	SS BHSCS 1/4-20 X 1	16
34	0400070	SCREW, 1/4-20X1 HHC GR5	6
35	0400128	SCREW, 3/8-16X1-1/4 FHS GR8 BO	24
36	0400369	NUT, 1/4 SPR J	8
37	0400393	NUT, 3/8-16 JAM	16
38	0400451	WASHER, 1/4	6
39	0400454	WASHER, 1/4 SS	22
40	0400491	LKWASHER, 1/2	14
41	0400498	WASHER, 1/2X2X0.125	14

ITEM	PART NUMBER	DESCRIPTION	QTY
42	0400687	SCREW, 10-24X3/4 PRH SS	4
43	0400816	WASHER, M10 SS	4
44	0401054	SCREW, 8-32X3/4 PRH SS	12
45	0402002	NUT, 8-32 LOK EXT SS	12
46	0402020	SCREW, 1/4-20X3/4 HHC SS	2
47	0402021	SCREW, 1/4-20X1 HHC SS	2
48	0402043	SCREW, 3/8-16X1-1/4 HHC SS	8
49	0402111	LKWASHER, 1/4 SS	18
50	0402113	NUT, 1/4-20 LOK SS	2
51	0402120	WASHER, 3/8 SS	16
52	0402121	LKWASHER, 3/8 SS	8
53	0402122	NUT, 3/8-16 HEX SS	8
54	0724476	PAD - NYLATRON - BBOM GUIDE	4
55	0726593	APNL-DCV LWR CTL PNL, 3 WINCH	2
56	0726594	APNL-DCV UPR LH CTL PNL,3WNCH	1
57	0726595	APNL-DCV UPR RH CTL PNL,3WNCH	1
58	0910787	STINGER ASSY - EURO - 144"	1
59	0910973	LH JACK LEG ASSY -FLIPPER FEET	1
60	0910974	RH JACK LEG ASSY -FLIPPER FEET	1
61	0911010	RECOVERY BOOM INSTALL V-70	1
62	0911804	AIR REGULATOR-GAUGE ASSEMBLY	2
63	0912015	SUBFRAME ASSY V70-100 STDWINCH	1
64	9010520	FITTING-ELBOW 1/4T-1/4NPT	4
65	9011053	FITTING, BRASS 1/4 TUBE-1/4 MP	1
66	9016815	MUNCIE PUMP TSPKS17-17-2BSSB	1
67	9024041	SWITCH, ROCKER SPST RED 12V21A	9
68	9041403	1/2 NC X 1 1/2 HHCS PL GR8	14
69	916770001	HOSE- HYD. 3/8 - 105" 8MJ-6MFA	1
70	920400005	MUD FLAP BRACE PLATE	1
71	9402970	TOOLBOX MTG. PAD	14
72	942480011	PLATE,SLOT-SS REAR WASHER TBOX	14
73	942480300	MTG ANGLE WELD'T LH - DCV COV.	2
74	942487300	MTG ANGLE WELD'T RH - DCV COV.	2
75	94320052	MUD FLAP 920-940 RUBBER	2
76	945770002	6AT2(6T90S-8MJ) HCL 48	2
77	945770003	6AT2(6T90L-8MJ) 24 HYD	4
78	946210500	TUBE, FRONT MTG WELD'T	1
79	946770003	HOSE ASSEMBLY - 8MJ-8MJ X 45	4
80	946770006	HOSE ASSEMBLY - 62	1
81	946770007	HOSE ASSEMBLY - 79	1
82	946770009	HOSE ASSEMBLY - 104	1
83	948570000	5X5 LIFT BAR ASSEMBLY 948 XHD	1

09008489, BUA V70 2-WINCH JACK LEG FLIPPER FEET (cont'd)

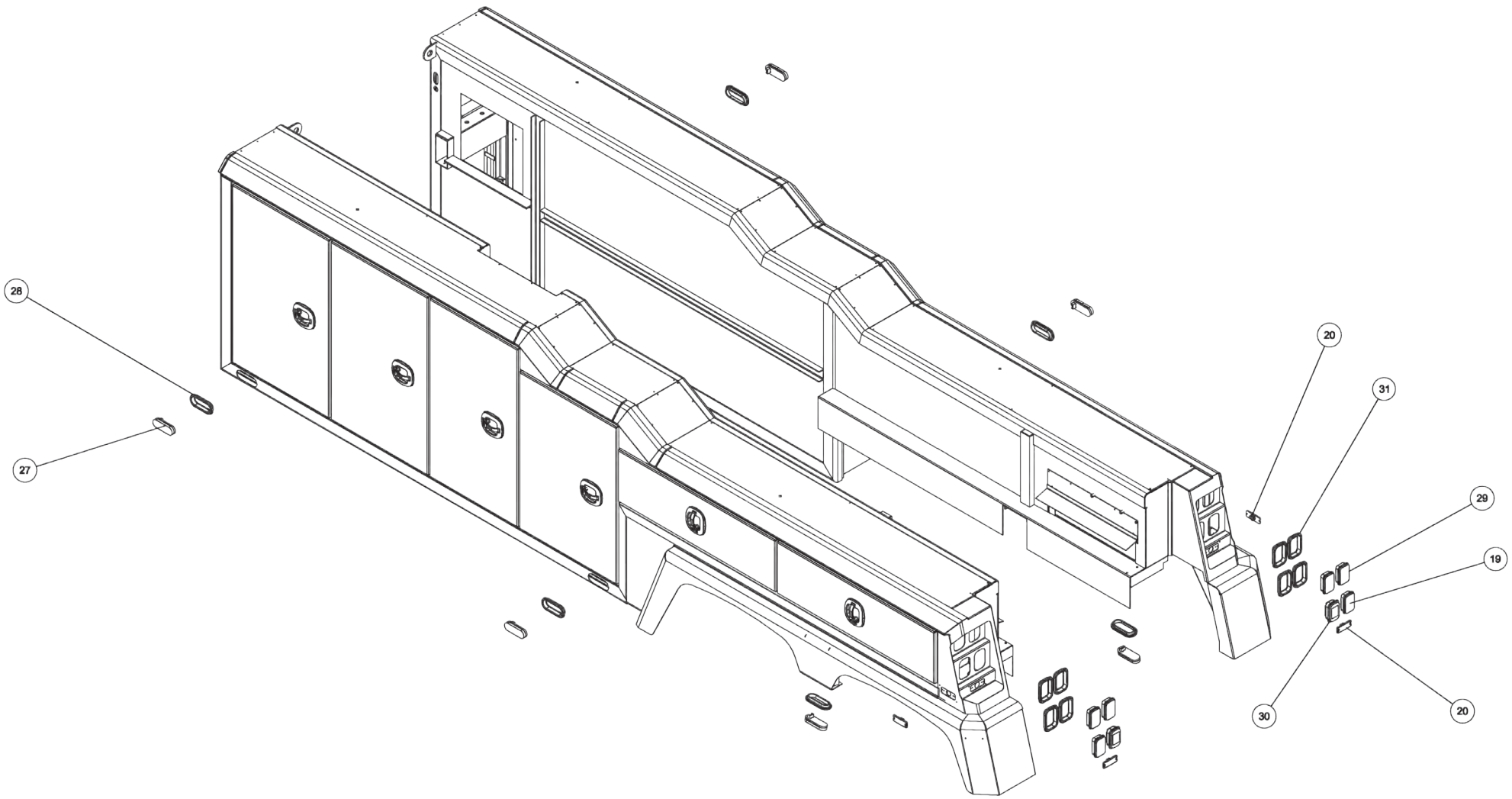

09008489, BUA V70 2-WINCH JACK LEG FLIPPER FEET (cont'd)

ITEM	PART NUMBER	DESCRIPTION	QTY
--	09008489	BUA V70 2W JL FLIPPER FEET	
1	0300341	KNOB, BLACK (BLANK)	12
2	0300364	CLAMP-HOSE,0.875"-2.75" 50"LBS	8
3	0301473	HOSE HYD, 18" LG	4
4	0301696	FITTING, ELB 90 DEG 6MJ-6FJX90	4
5	0301909	RECEPTACLE BOOT	1
6	0301946	FITTING, BLKHD CONNECT	3
7	0301947	FITTING, 45 DEG ADAPTER	1
8	0301948	HD 7 WAY TRAILER CONNECT	1
9	0302205	GAUGE, FLUSH MNTG-6000 PSI	4
10	0302534	FITTING, 45 DEG ELBOW	2
11	0302698	FITTING, HOSE BARB,1-1/4	2
12	0302901	HOSE HYD, 120" 12C12	2
13	0303538	FITT, ADAPTER -BRASS 8FP-6MP	1
14	0303539	QUICK DISCONNECT 3/8 FPT	1
15	0303948	ELBOW, 12MJ-16MB90	2
16	0304363	QUICK DISCONNECT 1/2 FPT	2
17	0306539	HOSE BARB 20HOSE16MB90	2
18	0306983	FITT-MALE RUNTEE 1/4T-1/4NPT	1
19	0307216	LIGHT, AMBER LED RECT 5.25X3.3	2
20	0307538	LIGHT, MRKR-RED LED 4.5 X 1.63	4
21	0307604	KNOB, RED LONG - SK0700-07	4
22	0307778	PLUG, FILLER	2
23	0310010	SUCTION HOSE,1-1/4ID X50 100R4	1
24	0310944	LH 200 CB TDM ALM BDY ‘10 VULC	1
25	0310945	RH 200 CB TDM ALM BDY ‘10 VULC	1
26	0311355	HOBBS HOURMETER	1
27	0311502	LIGHT 6"OVAL CLEAR-AMBER LED	6
28	0311503	GROMMET, LIGHT 6" OVAL	6
29	0311508	LED RECT RED STOP-CLEAR-12/24V	4
30	0311510	LIGHT RECT 12V REVERSE REFLEX	2
31	0311511	GROMMET, TAIL LIGHT, RECTANGULAR	8
32	0311755	WATER SEPARATOR-MONNIER	1
33	04000381	SS BHSCS 1/4-20 X 1	16
34	0400070	SCREW, 1/4-20X1 HHC GR5	6
35	0400128	SCREW, 3/8-16X1-1/4 FHS GR8 BO	24
36	0400369	NUT, 1/4 SPR J	8
37	0400393	NUT, 3/8-16 JAM	16
38	0400451	WASHER, 1/4	6
39	0400454	WASHER, 1/4 SS	22
40	0400491	LKWASHER, 1/2	14
41	0400498	WASHER, 1/2X2X0.125	14

ITEM	PART NUMBER	DESCRIPTION	QTY
42	0400687	SCREW, 10-24X3/4 PRH SS	4
43	0400816	WASHER, M10 SS	4
44	0401054	SCREW, 8-32X3/4 PRH SS	12
45	0402002	NUT, 8-32 LOK EXT SS	12
46	0402020	SCREW, 1/4-20X3/4 HHC SS	2
47	0402021	SCREW, 1/4-20X1 HHC SS	2
48	0402043	SCREW, 3/8-16X1-1/4 HHC SS	8
49	0402111	LKWASHER, 1/4 SS	18
50	0402113	NUT, 1/4-20 LOK SS	2
51	0402120	WASHER, 3/8 SS	16
52	0402121	LKWASHER, 3/8 SS	8
53	0402122	NUT, 3/8-16 HEX SS	8
54	0724476	PAD - NYLATRON - BBOM GUIDE	4
55	0726593	APNL-DCV LWR CTL PNL, 3 WINCH	2
56	0726594	APNL-DCV UPR LH CTL PNL,3WNCH	1
57	0726595	APNL-DCV UPR RH CTL PNL,3WNCH	1
58	0910787	STINGER ASSY - EURO - 144"	1
59	0910973	LH JACK LEG ASSY -FLIPPER FEET	1
60	0910974	RH JACK LEG ASSY -FLIPPER FEET	1
61	0911010	RECOVERY BOOM INSTALL V-70	1
62	0911804	AIR REGULATOR-GAUGE ASSEMBLY	2
63	0912015	SUBFRAME ASSY V70-100 STDWINCH	1
64	9010520	FITTING-ELBOW 1/4T-1/4NPT	4
65	9011053	FITTING, BRASS 1/4 TUBE-1/4 MP	1
66	9016815	MUNCIE PUMP TSPKS17-17-2BSSB	1
67	9024041	SWITCH, ROCKER SPST RED 12V21A	9
68	9041403	1/2 NC X 1 1/2 HHCS PL GR8	14
69	916770001	HOSE- HYD. 3/8 - 105" 8MJ-6MFA	1
70	920400005	MUD FLAP BRACE PLATE	1
71	9402970	TOOLBOX MTG. PAD	14
72	942480011	PLATE,SLOT-SS REAR WASHER TBOX	14
73	942480300	MTG ANGLE WELD'T LH - DCV COV.	2
74	942487300	MTG ANGLE WELD'T RH - DCV COV.	2
75	94320052	MUD FLAP 920-940 RUBBER	2
76	945770002	6AT2(6T90S-8MJ) HCL 48	2
77	945770003	6AT2(6T90L-8MJ) 24 HYD	4
78	946210500	TUBE, FRONT MTG WELD'T	1
79	946770003	HOSE ASSEMBLY - 8MJ-8MJ X 45	4
80	946770006	HOSE ASSEMBLY - 62	1
81	946770007	HOSE ASSEMBLY - 79	1
82	946770009	HOSE ASSEMBLY - 104	1
83	948570000	5X5 LIFT BAR ASSEMBLY 948 XHD	1

09008489, BUA V70 2-WINCH JACK LEG FLIPPER FEET (cont'd)

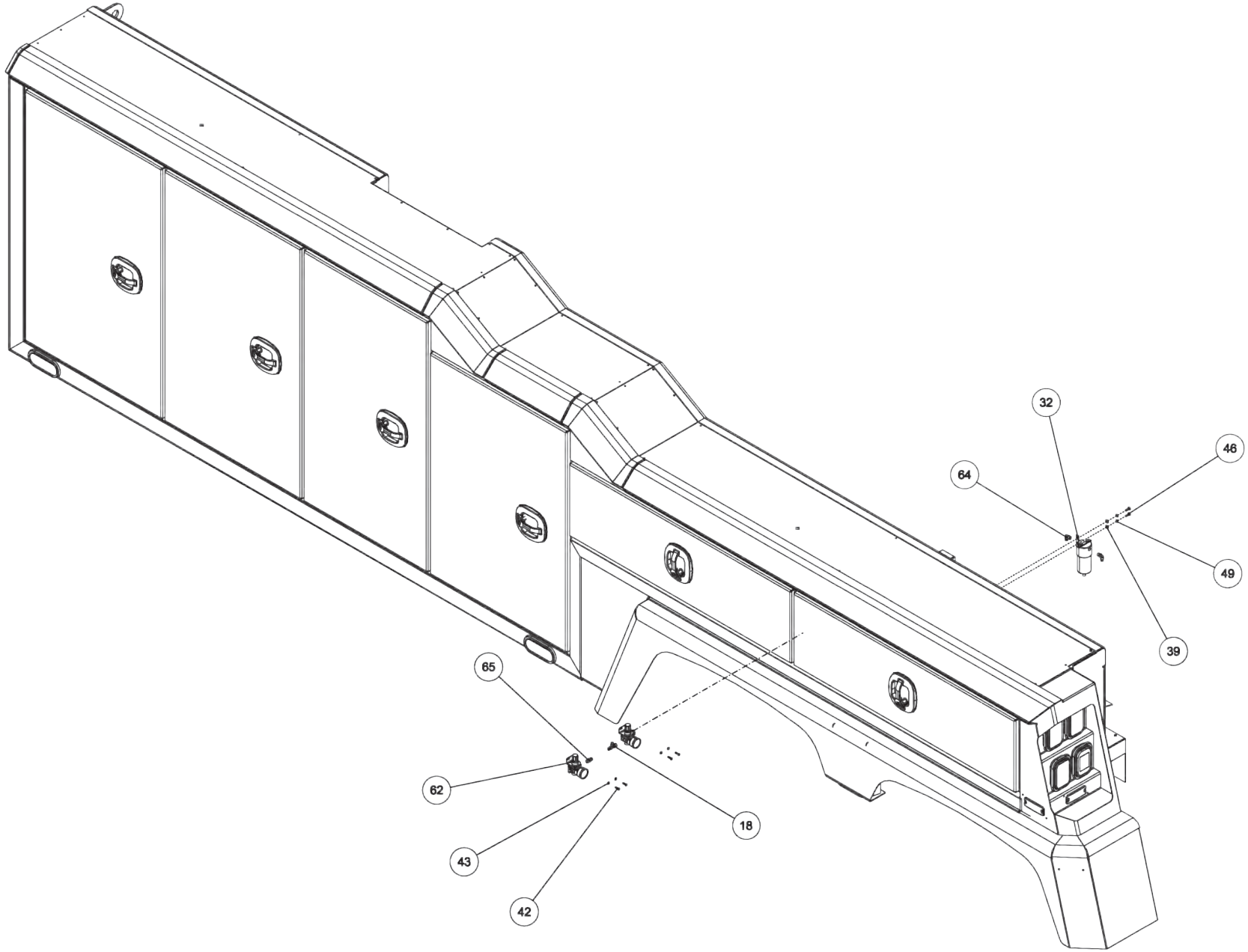

09008489, BUA V70 2-WINCH JACK LEG FLIPPER FEET (cont'd)

ITEM	PART NUMBER	DESCRIPTION	QTY
--	09008489	BUA V70 2W JL FLIPPER FEET	
1	0300341	KNOB, BLACK (BLANK)	12
2	0300364	CLAMP-HOSE,0.875"-2.75" 50"LBS	8
3	0301473	HOSE HYD, 18" LG	4
4	0301696	FITTING, ELB 90 DEG 6MJ-6FJX90	4
5	0301909	RECEPTACLE BOOT	1
6	0301946	FITTING, BLKHD CONNECT	3
7	0301947	FITTING, 45 DEG ADAPTER	1
8	0301948	HD 7 WAY TRAILER CONNECT	1
9	0302205	GAUGE, FLUSH MNTG-6000 PSI	4
10	0302534	FITTING, 45 DEG ELBOW	2
11	0302698	FITTING, HOSE BARB,1-1/4	2
12	0302901	HOSE HYD, 120" 12C12	2
13	0303538	FITT, ADAPTER -BRASS 8FP-6MP	1
14	0303539	QUICK DISCONNECT 3/8 FPT	1
15	0303948	ELBOW, 12MJ-16MB90	2
16	0304363	QUICK DISCONNECT 1/2 FPT	2
17	0306539	HOSE BARB 20HOSE16MB90	2
18	0306983	FITT-MALE RUNTEE 1/4T-1/4NPT	1
19	0307216	LIGHT, AMBER LED RECT 5.25X3.3	2
20	0307538	LIGHT, MRKR-RED LED 4.5 X 1.63	4
21	0307604	KNOB, RED LONG - SK0700-07	4
22	0307778	PLUG, FILLER	2
23	0310010	SUCTION HOSE,1-1/4ID X50 100R4	1
24	0310944	LH 200 CB TDM ALM BDY ‘10 VULC	1
25	0310945	RH 200 CB TDM ALM BDY ‘10 VULC	1
26	0311355	HOBBS HOURMETER	1
27	0311502	LIGHT 6"OVAL CLEAR-AMBER LED	6
28	0311503	GROMMET, LIGHT 6" OVAL	6
29	0311508	LED RECT RED STOP-CLEAR-12/24V	4
30	0311510	LIGHT RECT 12V REVERSE REFLEX	2
31	0311511	GROMMET, TAIL LIGHT, RECTANGULAR	8
32	0311755	WATER SEPARATOR-MONNIER	1
33	04000381	SS BHSCS 1/4-20 X 1	16
34	0400070	SCREW, 1/4-20X1 HHC GR5	6
35	0400128	SCREW, 3/8-16X1-1/4 FHS GR8 BO	24
36	0400369	NUT, 1/4 SPR J	8
37	0400393	NUT, 3/8-16 JAM	16
38	0400451	WASHER, 1/4	6
39	0400454	WASHER, 1/4 SS	22
40	0400491	LKWASHER, 1/2	14
41	0400498	WASHER, 1/2X2X0.125	14

ITEM	PART NUMBER	DESCRIPTION	QTY
42	0400687	SCREW, 10-24X3/4 PRH SS	4
43	0400816	WASHER, M10 SS	4
44	0401054	SCREW, 8-32X3/4 PRH SS	12
45	0402002	NUT, 8-32 LOK EXT SS	12
46	0402020	SCREW, 1/4-20X3/4 HHC SS	2
47	0402021	SCREW, 1/4-20X1 HHC SS	2
48	0402043	SCREW, 3/8-16X1-1/4 HHC SS	8
49	0402111	LKWASHER, 1/4 SS	18
50	0402113	NUT, 1/4-20 LOK SS	2
51	0402120	WASHER, 3/8 SS	16
52	0402121	LKWASHER, 3/8 SS	8
53	0402122	NUT, 3/8-16 HEX SS	8
54	0724476	PAD - NYLATRON - BBOM GUIDE	4
55	0726593	APNL-DCV LWR CTL PNL, 3 WINCH	2
56	0726594	APNL-DCV UPR LH CTL PNL,3WNCH	1
57	0726595	APNL-DCV UPR RH CTL PNL,3WNCH	1
58	0910787	STINGER ASSY - EURO - 144"	1
59	0910973	LH JACK LEG ASSY -FLIPPER FEET	1
60	0910974	RH JACK LEG ASSY -FLIPPER FEET	1
61	0911010	RECOVERY BOOM INSTALL V-70	1
62	0911804	AIR REGULATOR-GAUGE ASSEMBLY	2
63	0912015	SUBFRAME ASSY V70-100 STDWINCH	1
64	9010520	FITTING-ELBOW 1/4T-1/4NPT	4
65	9011053	FITTING, BRASS 1/4 TUBE-1/4 MP	1
66	9016815	MUNCIE PUMP TSPKS17-17-2BSSB	1
67	9024041	SWITCH, ROCKER SPST RED 12V21A	9
68	9041403	1/2 NC X 1 1/2 HHCS PL GR8	14
69	916770001	HOSE- HYD. 3/8 - 105" 8MJ-6MFA	1
70	920400005	MUD FLAP BRACE PLATE	1
71	9402970	TOOLBOX MTG. PAD	14
72	942480011	PLATE,SLOT-SS REAR WASHER TBOX	14
73	942480300	MTG ANGLE WELD'T LH - DCV COV.	2
74	942487300	MTG ANGLE WELD'T RH - DCV COV.	2
75	94320052	MUD FLAP 920-940 RUBBER	2
76	945770002	6AT2(6T90S-8MJ) HCL 48	2
77	945770003	6AT2(6T90L-8MJ) 24 HYD	4
78	946210500	TUBE, FRONT MTG WELD'T	1
79	946770003	HOSE ASSEMBLY - 8MJ-8MJ X 45	4
80	946770006	HOSE ASSEMBLY - 62	1
81	946770007	HOSE ASSEMBLY - 79	1
82	946770009	HOSE ASSEMBLY - 104	1
83	948570000	5X5 LIFT BAR ASSEMBLY 948 XHD	1

09008489, BUA V70 2-WINCH JACK LEG FLIPPER FEET (cont'd)

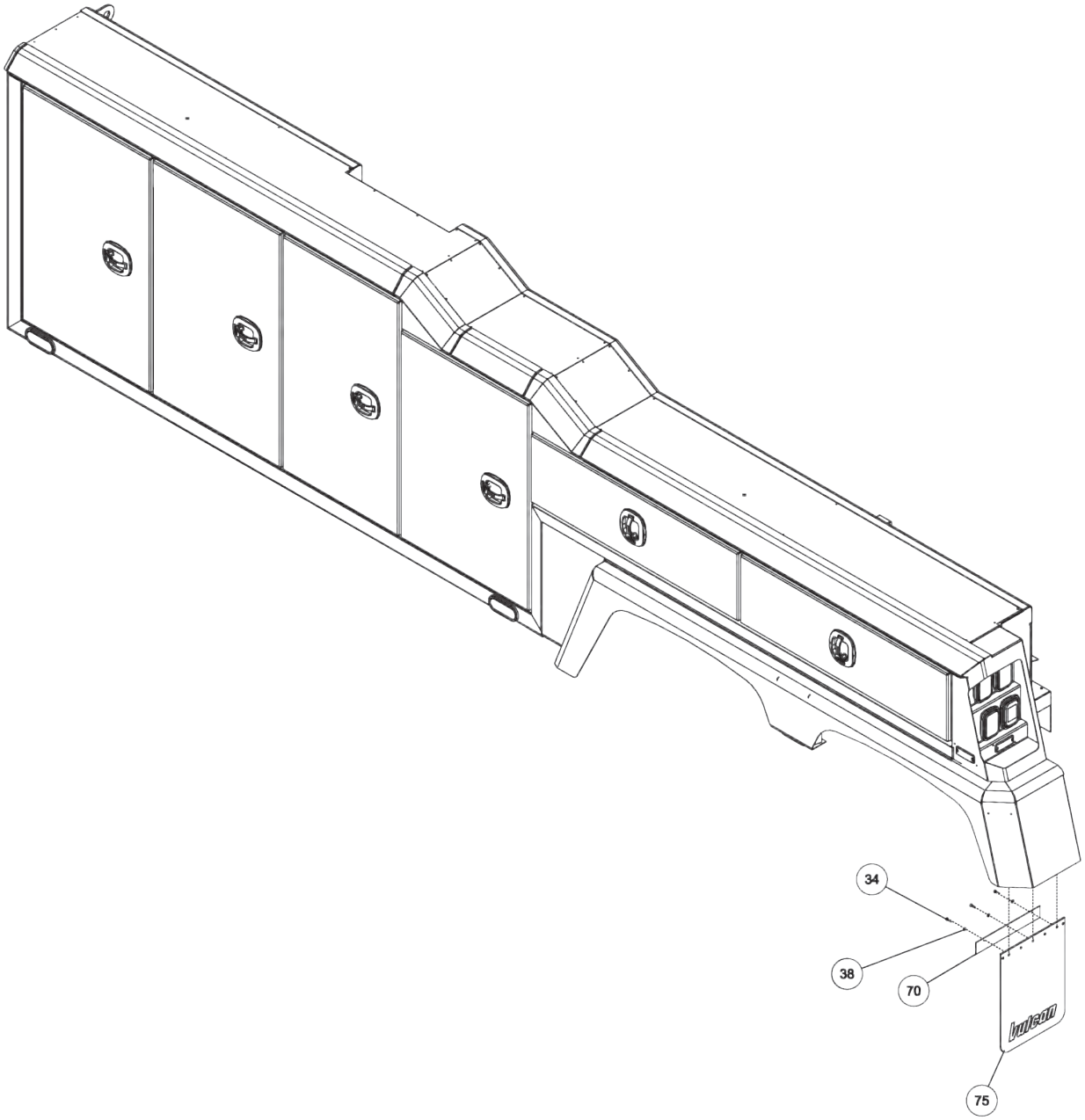

09008489, BUA V70 2-WINCH JACK LEG FLIPPER FEET (cont'd)

ITEM	PART NUMBER	DESCRIPTION	QTY
--	09008489	BUA V70 2W JL FLIPPER FEET	
1	0300341	KNOB, BLACK (BLANK)	12
2	0300364	CLAMP-HOSE,0.875"-2.75" 50"LBS	8
3	0301473	HOSE HYD, 18" LG	4
4	0301696	FITTING, ELB 90 DEG 6MJ-6FJX90	4
5	0301909	RECEPTACLE BOOT	1
6	0301946	FITTING, BLKHD CONNECT	3
7	0301947	FITTING, 45 DEG ADAPTER	1
8	0301948	HD 7 WAY TRAILER CONNECT	1
9	0302205	GAUGE, FLUSH MNTG-6000 PSI	4
10	0302534	FITTING, 45 DEG ELBOW	2
11	0302698	FITTING, HOSE BARB,1-1/4	2
12	0302901	HOSE HYD, 120" 12C12	2
13	0303538	FITT, ADAPTER -BRASS 8FP-6MP	1
14	0303539	QUICK DISCONNECT 3/8 FPT	1
15	0303948	ELBOW, 12MJ-16MB90	2
16	0304363	QUICK DISCONNECT 1/2 FPT	2
17	0306539	HOSE BARB 20HOSE16MB90	2
18	0306983	FITT-MALE RUNTEE 1/4T-1/4NPT	1
19	0307216	LIGHT, AMBER LED RECT 5.25X3.3	2
20	0307538	LIGHT, MRKR-RED LED 4.5 X 1.63	4
21	0307604	KNOB, RED LONG - SK0700-07	4
22	0307778	PLUG, FILLER	2
23	0310010	SUCTION HOSE,1-1/4ID X50 100R4	1
24	0310944	LH 200 CB TDM ALM BDY ‘10 VULC	1
25	0310945	RH 200 CB TDM ALM BDY ‘10 VULC	1
26	0311355	HOBBS HOURMETER	1
27	0311502	LIGHT 6"OVAL CLEAR-AMBER LED	6
28	0311503	GROMMET, LIGHT 6" OVAL	6
29	0311508	LED RECT RED STOP-CLEAR-12/24V	4
30	0311510	LIGHT RECT 12V REVERSE REFLEX	2
31	0311511	GROMMET, TAIL LIGHT, RECTANGULAR	8
32	0311755	WATER SEPARATOR-MONNIER	1
33	04000381	SS BHSCS 1/4-20 X 1	16
34	0400070	SCREW, 1/4-20X1 HHC GR5	6
35	0400128	SCREW, 3/8-16X1-1/4 FHS GR8 BO	24
36	0400369	NUT, 1/4 SPR J	8
37	0400393	NUT, 3/8-16 JAM	16
38	0400451	WASHER, 1/4	6
39	0400454	WASHER, 1/4 SS	22
40	0400491	LKWASHER, 1/2	14
41	0400498	WASHER, 1/2X2X0.125	14

ITEM	PART NUMBER	DESCRIPTION	QTY
42	0400687	SCREW, 10-24X3/4 PRH SS	4
43	0400816	WASHER, M10 SS	4
44	0401054	SCREW, 8-32X3/4 PRH SS	12
45	0402002	NUT, 8-32 LOK EXT SS	12
46	0402020	SCREW, 1/4-20X3/4 HHC SS	2
47	0402021	SCREW, 1/4-20X1 HHC SS	2
48	0402043	SCREW, 3/8-16X1-1/4 HHC SS	8
49	0402111	LKWASHER, 1/4 SS	18
50	0402113	NUT, 1/4-20 LOK SS	2
51	0402120	WASHER, 3/8 SS	16
52	0402121	LKWASHER, 3/8 SS	8
53	0402122	NUT, 3/8-16 HEX SS	8
54	0724476	PAD - NYLATRON - BBOM GUIDE	4
55	0726593	APNL-DCV LWR CTL PNL, 3 WINCH	2
56	0726594	APNL-DCV UPR LH CTL PNL,3WNCH	1
57	0726595	APNL-DCV UPR RH CTL PNL,3WNCH	1
58	0910787	STINGER ASSY - EURO - 144"	1
59	0910973	LH JACK LEG ASSY -FLIPPER FEET	1
60	0910974	RH JACK LEG ASSY -FLIPPER FEET	1
61	0911010	RECOVERY BOOM INSTALL V-70	1
62	0911804	AIR REGULATOR-GAUGE ASSEMBLY	2
63	0912015	SUBFRAME ASSY V70-100 STDWINCH	1
64	9010520	FITTING-ELBOW 1/4T-1/4NPT	4
65	9011053	FITTING, BRASS 1/4 TUBE-1/4 MP	1
66	9016815	MUNCIE PUMP TSPKS17-17-2BSSB	1
67	9024041	SWITCH, ROCKER SPST RED 12V21A	9
68	9041403	1/2 NC X 1 1/2 HHCS PL GR8	14
69	916770001	HOSE- HYD. 3/8 - 105" 8MJ-6MFA	1
70	920400005	MUD FLAP BRACE PLATE	1
71	9402970	TOOLBOX MTG. PAD	14
72	942480011	PLATE,SLOT-SS REAR WASHER TBOX	14
73	942480300	MTG ANGLE WELD'T LH - DCV COV.	2
74	942487300	MTG ANGLE WELD'T RH - DCV COV.	2
75	94320052	MUD FLAP 920-940 RUBBER	2
76	945770002	6AT2(6T90S-8MJ) HCL 48	2
77	945770003	6AT2(6T90L-8MJ) 24 HYD	4
78	946210500	TUBE, FRONT MTG WELD'T	1
79	946770003	HOSE ASSEMBLY - 8MJ-8MJ X 45	4
80	946770006	HOSE ASSEMBLY - 62	1
81	946770007	HOSE ASSEMBLY - 79	1
82	946770009	HOSE ASSEMBLY - 104	1
83	948570000	5X5 LIFT BAR ASSEMBLY 948 XHD	1

09008489, BUA V70 2-WINCH JACK LEG FLIPPER FEET (cont'd)

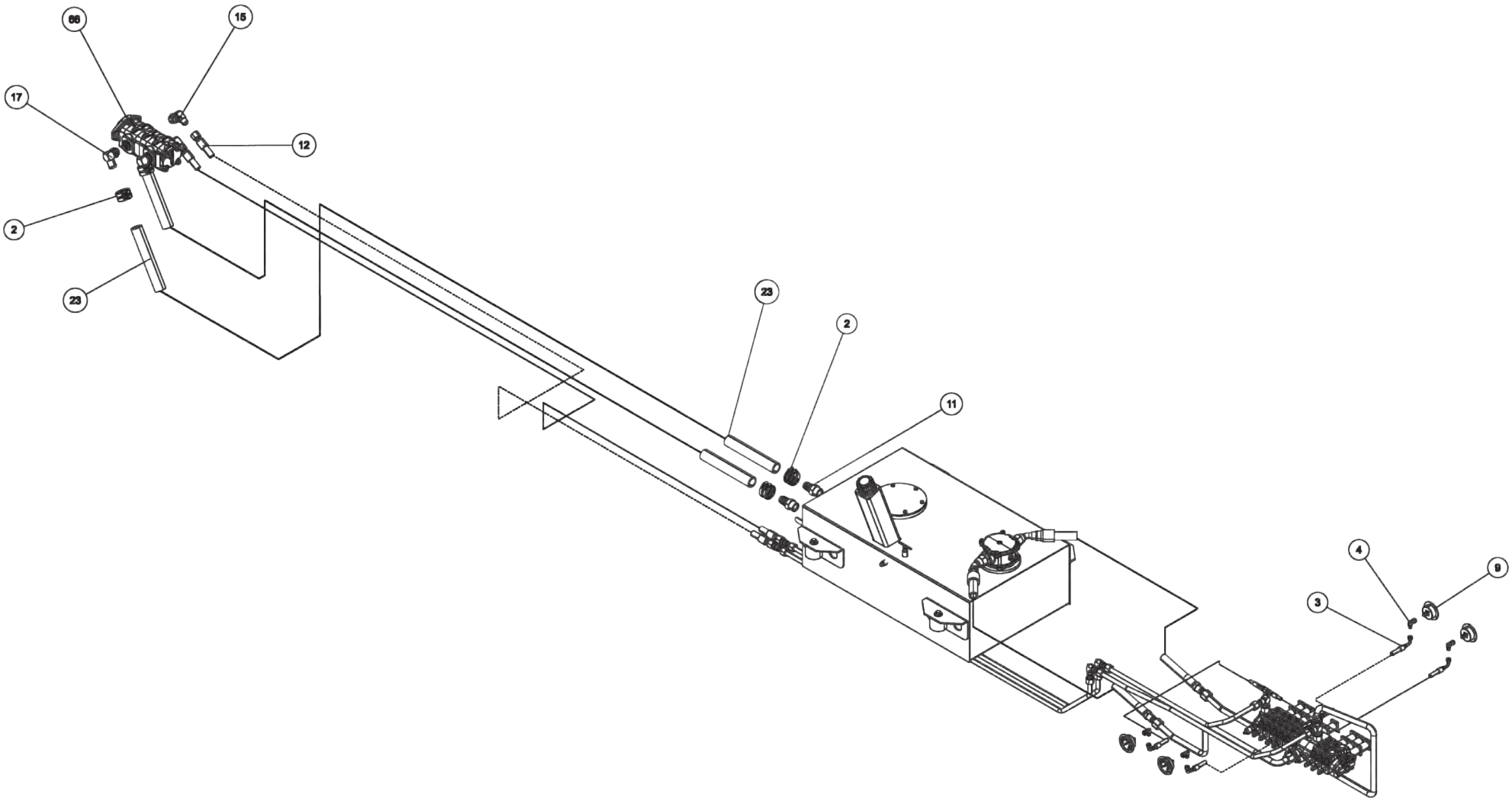

09008489, BUA V70 2-WINCH JACK LEG FLIPPER FEET (cont'd)

ITEM	PART NUMBER	DESCRIPTION	QTY
--	09008489	BUA V70 2W JL FLIPPER FEET	
1	0300341	KNOB, BLACK (BLANK)	12
2	0300364	CLAMP-HOSE,0.875"-2.75" 50"LBS	8
3	0301473	HOSE HYD, 18" LG	4
4	0301696	FITTING, ELB 90 DEG 6MJ-6FJX90	4
5	0301909	RECEPTACLE BOOT	1
6	0301946	FITTING, BLKHD CONNECT	3
7	0301947	FITTING, 45 DEG ADAPTER	1
8	0301948	HD 7 WAY TRAILER CONNECT	1
9	0302205	GAUGE, FLUSH MNTG-6000 PSI	4
10	0302534	FITTING, 45 DEG ELBOW	2
11	0302698	FITTING, HOSE BARB,1-1/4	2
12	0302901	HOSE HYD, 120" 12C12	2
13	0303538	FITT, ADAPTER -BRASS 8FP-6MP	1
14	0303539	QUICK DISCONNECT 3/8 FPT	1
15	0303948	ELBOW, 12MJ-16MB90	2
16	0304363	QUICK DISCONNECT 1/2 FPT	2
17	0306539	HOSE BARB 20HOSE16MB90	2
18	0306983	FITT-MALE RUNTEE 1/4T-1/4NPT	1
19	0307216	LIGHT, AMBER LED RECT 5.25X3.3	2
20	0307538	LIGHT, MRKR-RED LED 4.5 X 1.63	4
21	0307604	KNOB, RED LONG - SK0700-07	4
22	0307778	PLUG, FILLER	2
23	0310010	SUCTION HOSE,1-1/4ID X50 100R4	1
24	0310944	LH 200 CB TDM ALM BDY ‘10 VULC	1
25	0310945	RH 200 CB TDM ALM BDY ‘10 VULC	1
26	0311355	HOBBS HOURMETER	1
27	0311502	LIGHT 6"OVAL CLEAR-AMBER LED	6
28	0311503	GROMMET, LIGHT 6" OVAL	6
29	0311508	LED RECT RED STOP-CLEAR-12/24V	4
30	0311510	LIGHT RECT 12V REVERSE REFLEX	2
31	0311511	GROMMET, TAIL LIGHT, RECTANGULAR	8
32	0311755	WATER SEPARATOR-MONNIER	1
33	04000381	SS BHSCS 1/4-20 X 1	16
34	0400070	SCREW, 1/4-20X1 HHC GR5	6
35	0400128	SCREW, 3/8-16X1-1/4 FHS GR8 BO	24
36	0400369	NUT, 1/4 SPR J	8
37	0400393	NUT, 3/8-16 JAM	16
38	0400451	WASHER, 1/4	6
39	0400454	WASHER, 1/4 SS	22
40	0400491	LKWASHER, 1/2	14
41	0400498	WASHER, 1/2X2X0.125	14

ITEM	PART NUMBER	DESCRIPTION	QTY
42	0400687	SCREW, 10-24X3/4 PRH SS	4
43	0400816	WASHER, M10 SS	4
44	0401054	SCREW, 8-32X3/4 PRH SS	12
45	0402002	NUT, 8-32 LOK EXT SS	12
46	0402020	SCREW, 1/4-20X3/4 HHC SS	2
47	0402021	SCREW, 1/4-20X1 HHC SS	2
48	0402043	SCREW, 3/8-16X1-1/4 HHC SS	8
49	0402111	LKWASHER, 1/4 SS	18
50	0402113	NUT, 1/4-20 LOK SS	2
51	0402120	WASHER, 3/8 SS	16
52	0402121	LKWASHER, 3/8 SS	8
53	0402122	NUT, 3/8-16 HEX SS	8
54	0724476	PAD - NYLATRON - BBOM GUIDE	4
55	0726593	APNL-DCV LWR CTL PNL, 3 WINCH	2
56	0726594	APNL-DCV UPR LH CTL PNL,3WNCH	1
57	0726595	APNL-DCV UPR RH CTL PNL,3WNCH	1
58	0910787	STINGER ASSY - EURO - 144"	1
59	0910973	LH JACK LEG ASSY -FLIPPER FEET	1
60	0910974	RH JACK LEG ASSY -FLIPPER FEET	1
61	0911010	RECOVERY BOOM INSTALL V-70	1
62	0911804	AIR REGULATOR-GAUGE ASSEMBLY	2
63	0912015	SUBFRAME ASSY V70-100 STDWINCH	1
64	9010520	FITTING-ELBOW 1/4T-1/4NPT	4
65	9011053	FITTING, BRASS 1/4 TUBE-1/4 MP	1
66	9016815	MUNCIE PUMP TSPKS17-17-2BSSB	1
67	9024041	SWITCH, ROCKER SPST RED 12V21A	9
68	9041403	1/2 NC X 1 1/2 HHCS PL GR8	14
69	916770001	HOSE- HYD. 3/8 - 105" 8MJ-6MFA	1
70	920400005	MUD FLAP BRACE PLATE	1
71	9402970	TOOLBOX MTG. PAD	14
72	942480011	PLATE,SLOT-SS REAR WASHER TBOX	14
73	942480300	MTG ANGLE WELD'T LH - DCV COV.	2
74	942487300	MTG ANGLE WELD'T RH - DCV COV.	2
75	94320052	MUD FLAP 920-940 RUBBER	2
76	945770002	6AT2(6T90S-8MJ) HCL 48	2
77	945770003	6AT2(6T90L-8MJ) 24 HYD	4
78	946210500	TUBE, FRONT MTG WELD'T	1
79	946770003	HOSE ASSEMBLY - 8MJ-8MJ X 45	4
80	946770006	HOSE ASSEMBLY - 62	1
81	946770007	HOSE ASSEMBLY - 79	1
82	946770009	HOSE ASSEMBLY - 104	1
83	948570000	5X5 LIFT BAR ASSEMBLY 948 XHD	1

09008489, BUA V70 2-WINCH JACK LEG FLIPPER FEET (cont'd)

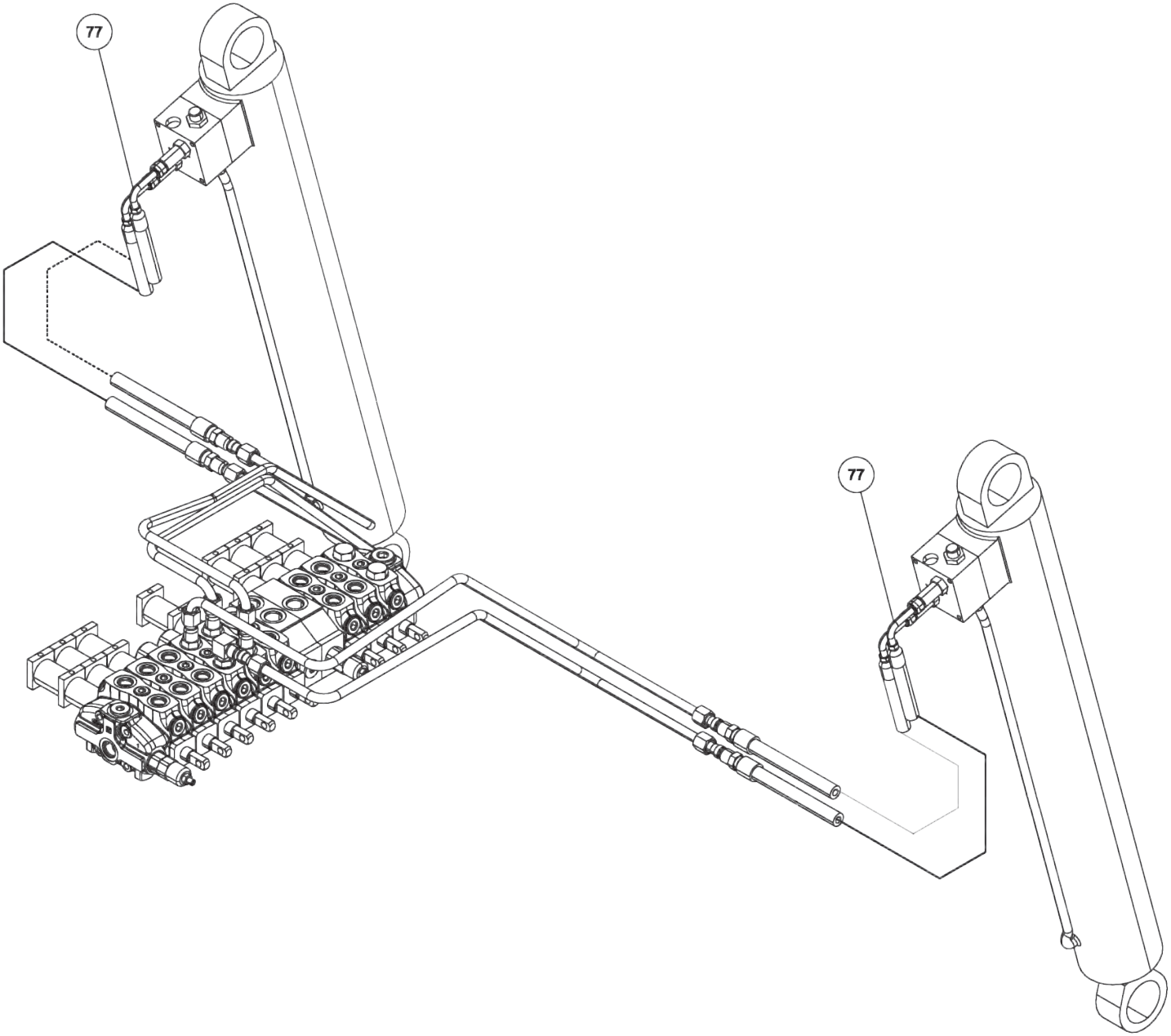

09008489, BUA V70 2-WINCH JACK LEG FLIPPER FEET (cont'd)

ITEM	PART NUMBER	DESCRIPTION	QTY
--	09008489	BUA V70 2W JL FLIPPER FEET	
1	0300341	KNOB, BLACK (BLANK)	12
2	0300364	CLAMP-HOSE,0.875"-2.75" 50"LBS	8
3	0301473	HOSE HYD, 18" LG	4
4	0301696	FITTING, ELB 90 DEG 6MJ-6FJX90	4
5	0301909	RECEPTACLE BOOT	1
6	0301946	FITTING, BLKHD CONNECT	3
7	0301947	FITTING, 45 DEG ADAPTER	1
8	0301948	HD 7 WAY TRAILER CONNECT	1
9	0302205	GAUGE, FLUSH MNTG-6000 PSI	4
10	0302534	FITTING, 45 DEG ELBOW	2
11	0302698	FITTING, HOSE BARB,1-1/4	2
12	0302901	HOSE HYD, 120" 12C12	2
13	0303538	FITT, ADAPTER -BRASS 8FP-6MP	1
14	0303539	QUICK DISCONNECT 3/8 FPT	1
15	0303948	ELBOW, 12MJ-16MB90	2
16	0304363	QUICK DISCONNECT 1/2 FPT	2
17	0306539	HOSE BARB 20HOSE16MB90	2
18	0306983	FITT-MALE RUNTEE 1/4T-1/4NPT	1
19	0307216	LIGHT, AMBER LED RECT 5.25X3.3	2
20	0307538	LIGHT, MRKR-RED LED 4.5 X 1.63	4
21	0307604	KNOB, RED LONG - SK0700-07	4
22	0307778	PLUG, FILLER	2
23	0310010	SUCTION HOSE,1-1/4ID X50 100R4	1
24	0310944	LH 200 CB TDM ALM BDY ‘10 VULC	1
25	0310945	RH 200 CB TDM ALM BDY ‘10 VULC	1
26	0311355	HOBBS HOURMETER	1
27	0311502	LIGHT 6"OVAL CLEAR-AMBER LED	6
28	0311503	GROMMET, LIGHT 6" OVAL	6
29	0311508	LED RECT RED STOP-CLEAR-12/24V	4
30	0311510	LIGHT RECT 12V REVERSE REFLEX	2
31	0311511	GROMMET, TAIL LIGHT, RECTANGULAR	8
32	0311755	WATER SEPARATOR-MONNIER	1
33	04000381	SS BHSCS 1/4-20 X 1	16
34	0400070	SCREW, 1/4-20X1 HHC GR5	6
35	0400128	SCREW, 3/8-16X1-1/4 FHS GR8 BO	24
36	0400369	NUT, 1/4 SPR J	8
37	0400393	NUT, 3/8-16 JAM	16
38	0400451	WASHER, 1/4	6
39	0400454	WASHER, 1/4 SS	22
40	0400491	LKWASHER, 1/2	14
41	0400498	WASHER, 1/2X2X0.125	14

ITEM	PART NUMBER	DESCRIPTION	QTY
42	0400687	SCREW, 10-24X3/4 PRH SS	4
43	0400816	WASHER, M10 SS	4
44	0401054	SCREW, 8-32X3/4 PRH SS	12
45	0402002	NUT, 8-32 LOK EXT SS	12
46	0402020	SCREW, 1/4-20X3/4 HHC SS	2
47	0402021	SCREW, 1/4-20X1 HHC SS	2
48	0402043	SCREW, 3/8-16X1-1/4 HHC SS	8
49	0402111	LKWASHER, 1/4 SS	18
50	0402113	NUT, 1/4-20 LOK SS	2
51	0402120	WASHER, 3/8 SS	16
52	0402121	LKWASHER, 3/8 SS	8
53	0402122	NUT, 3/8-16 HEX SS	8
54	0724476	PAD - NYLATRON - BBOM GUIDE	4
55	0726593	APNL-DCV LWR CTL PNL, 3 WINCH	2
56	0726594	APNL-DCV UPR LH CTL PNL,3WNCH	1
57	0726595	APNL-DCV UPR RH CTL PNL,3WNCH	1
58	0910787	STINGER ASSY - EURO - 144"	1
59	0910973	LH JACK LEG ASSY -FLIPPER FEET	1
60	0910974	RH JACK LEG ASSY -FLIPPER FEET	1
61	0911010	RECOVERY BOOM INSTALL V-70	1
62	0911804	AIR REGULATOR-GAUGE ASSEMBLY	2
63	0912015	SUBFRAME ASSY V70-100 STDWINCH	1
64	9010520	FITTING-ELBOW 1/4T-1/4NPT	4
65	9011053	FITTING, BRASS 1/4 TUBE-1/4 MP	1
66	9016815	MUNCIE PUMP TSPKS17-17-2BSSB	1
67	9024041	SWITCH, ROCKER SPST RED 12V21A	9
68	9041403	1/2 NC X 1 1/2 HHCS PL GR8	14
69	916770001	HOSE- HYD. 3/8 - 105" 8MJ-6MFA	1
70	920400005	MUD FLAP BRACE PLATE	1
71	9402970	TOOLBOX MTG. PAD	14
72	942480011	PLATE,SLOT-SS REAR WASHER TBOX	14
73	942480300	MTG ANGLE WELD'T LH - DCV COV.	2
74	942487300	MTG ANGLE WELD'T RH - DCV COV.	2
75	94320052	MUD FLAP 920-940 RUBBER	2
76	945770002	6AT2(6T90S-8MJ) HCL 48	2
77	945770003	6AT2(6T90L-8MJ) 24 HYD	4
78	946210500	TUBE, FRONT MTG WELD'T	1
79	946770003	HOSE ASSEMBLY - 8MJ-8MJ X 45	4
80	946770006	HOSE ASSEMBLY - 62	1
81	946770007	HOSE ASSEMBLY - 79	1
82	946770009	HOSE ASSEMBLY - 104	1
83	948570000	5X5 LIFT BAR ASSEMBLY 948 XHD	1

09008489, BUA V70 2-WINCH JACK LEG FLIPPER FEET (cont'd)

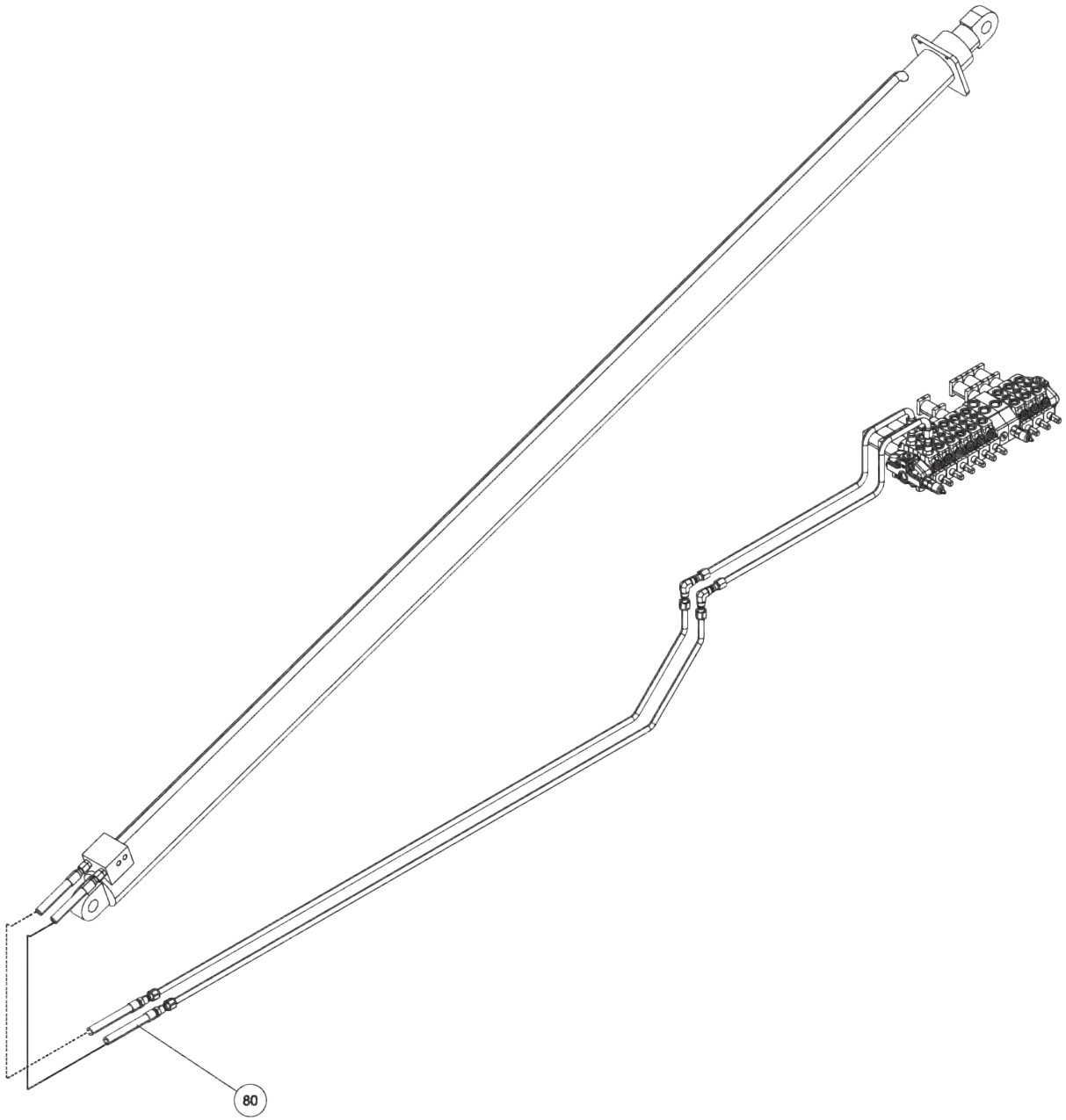

09008489, BUA V70 2-WINCH JACK LEG FLIPPER FEET (cont'd)

ITEM	PART NUMBER	DESCRIPTION	QTY
--	09008489	BUA V70 2W JL FLIPPER FEET	
1	0300341	KNOB, BLACK (BLANK)	12
2	0300364	CLAMP-HOSE,0.875"-2.75" 50"LBS	8
3	0301473	HOSE HYD, 18" LG	4
4	0301696	FITTING, ELB 90 DEG 6MJ-6FJX90	4
5	0301909	RECEPTACLE BOOT	1
6	0301946	FITTING, BLKHD CONNECT	3
7	0301947	FITTING, 45 DEG ADAPTER	1
8	0301948	HD 7 WAY TRAILER CONNECT	1
9	0302205	GAUGE, FLUSH MNTG-6000 PSI	4
10	0302534	FITTING, 45 DEG ELBOW	2
11	0302698	FITTING, HOSE BARB,1-1/4	2
12	0302901	HOSE HYD, 120" 12C12	2
13	0303538	FITT, ADAPTER -BRASS 8FP-6MP	1
14	0303539	QUICK DISCONNECT 3/8 FPT	1
15	0303948	ELBOW, 12MJ-16MB90	2
16	0304363	QUICK DISCONNECT 1/2 FPT	2
17	0306539	HOSE BARB 20HOSE16MB90	2
18	0306983	FITT-MALE RUNTEE 1/4T-1/4NPT	1
19	0307216	LIGHT, AMBER LED RECT 5.25X3.3	2
20	0307538	LIGHT, MRKR-RED LED 4.5 X 1.63	4
21	0307604	KNOB, RED LONG - SK0700-07	4
22	0307778	PLUG, FILLER	2
23	0310010	SUCTION HOSE,1-1/4ID X50 100R4	1
24	0310944	LH 200 CB TDM ALM BDY ‘10 VULC	1
25	0310945	RH 200 CB TDM ALM BDY ‘10 VULC	1
26	0311355	HOBBS HOURMETER	1
27	0311502	LIGHT 6"OVAL CLEAR-AMBER LED	6
28	0311503	GROMMET, LIGHT 6" OVAL	6
29	0311508	LED RECT RED STOP-CLEAR-12/24V	4
30	0311510	LIGHT RECT 12V REVERSE REFLEX	2
31	0311511	GROMMET, TAIL LIGHT, RECTANGULAR	8
32	0311755	WATER SEPARATOR-MONNIER	1
33	04000381	SS BHSCS 1/4-20 X 1	16
34	0400070	SCREW, 1/4-20X1 HHC GR5	6
35	0400128	SCREW, 3/8-16X1-1/4 FHS GR8 BO	24
36	0400369	NUT, 1/4 SPR J	8
37	0400393	NUT, 3/8-16 JAM	16
38	0400451	WASHER, 1/4	6
39	0400454	WASHER, 1/4 SS	22
40	0400491	LKWASHER, 1/2	14
41	0400498	WASHER, 1/2X2X0.125	14

ITEM	PART NUMBER	DESCRIPTION	QTY
42	0400687	SCREW, 10-24X3/4 PRH SS	4
43	0400816	WASHER, M10 SS	4
44	0401054	SCREW, 8-32X3/4 PRH SS	12
45	0402002	NUT, 8-32 LOK EXT SS	12
46	0402020	SCREW, 1/4-20X3/4 HHC SS	2
47	0402021	SCREW, 1/4-20X1 HHC SS	2
48	0402043	SCREW, 3/8-16X1-1/4 HHC SS	8
49	0402111	LKWASHER, 1/4 SS	18
50	0402113	NUT, 1/4-20 LOK SS	2
51	0402120	WASHER, 3/8 SS	16
52	0402121	LKWASHER, 3/8 SS	8
53	0402122	NUT, 3/8-16 HEX SS	8
54	0724476	PAD - NYLATRON - BBOM GUIDE	4
55	0726593	APNL-DCV LWR CTL PNL, 3 WINCH	2
56	0726594	APNL-DCV UPR LH CTL PNL,3WNCH	1
57	0726595	APNL-DCV UPR RH CTL PNL,3WNCH	1
58	0910787	STINGER ASSY - EURO - 144"	1
59	0910973	LH JACK LEG ASSY -FLIPPER FEET	1
60	0910974	RH JACK LEG ASSY -FLIPPER FEET	1
61	0911010	RECOVERY BOOM INSTALL V-70	1
62	0911804	AIR REGULATOR-GAUGE ASSEMBLY	2
63	0912015	SUBFRAME ASSY V70-100 STDWINCH	1
64	9010520	FITTING-ELBOW 1/4T-1/4NPT	4
65	9011053	FITTING, BRASS 1/4 TUBE-1/4 MP	1
66	9016815	MUNCIE PUMP TSPKS17-17-2BSSB	1
67	9024041	SWITCH, ROCKER SPST RED 12V21A	9
68	9041403	1/2 NC X 1 1/2 HHCS PL GR8	14
69	916770001	HOSE- HYD. 3/8 - 105" 8MJ-6MFA	1
70	920400005	MUD FLAP BRACE PLATE	1
71	9402970	TOOLBOX MTG. PAD	14
72	942480011	PLATE,SLOT-SS REAR WASHER TBOX	14
73	942480300	MTG ANGLE WELD'T LH - DCV COV.	2
74	942487300	MTG ANGLE WELD'T RH - DCV COV.	2
75	94320052	MUD FLAP 920-940 RUBBER	2
76	945770002	6AT2(6T90S-8MJ) HCL 48	2
77	945770003	6AT2(6T90L-8MJ) 24 HYD	4
78	946210500	TUBE, FRONT MTG WELD'T	1
79	946770003	HOSE ASSEMBLY - 8MJ-8MJ X 45	4
80	946770006	HOSE ASSEMBLY - 62	1
81	946770007	HOSE ASSEMBLY - 79	1
82	946770009	HOSE ASSEMBLY - 104	1
83	948570000	5X5 LIFT BAR ASSEMBLY 948 XHD	1

09008489, BUA V70 2-WINCH JACK LEG FLIPPER FEET (cont'd)

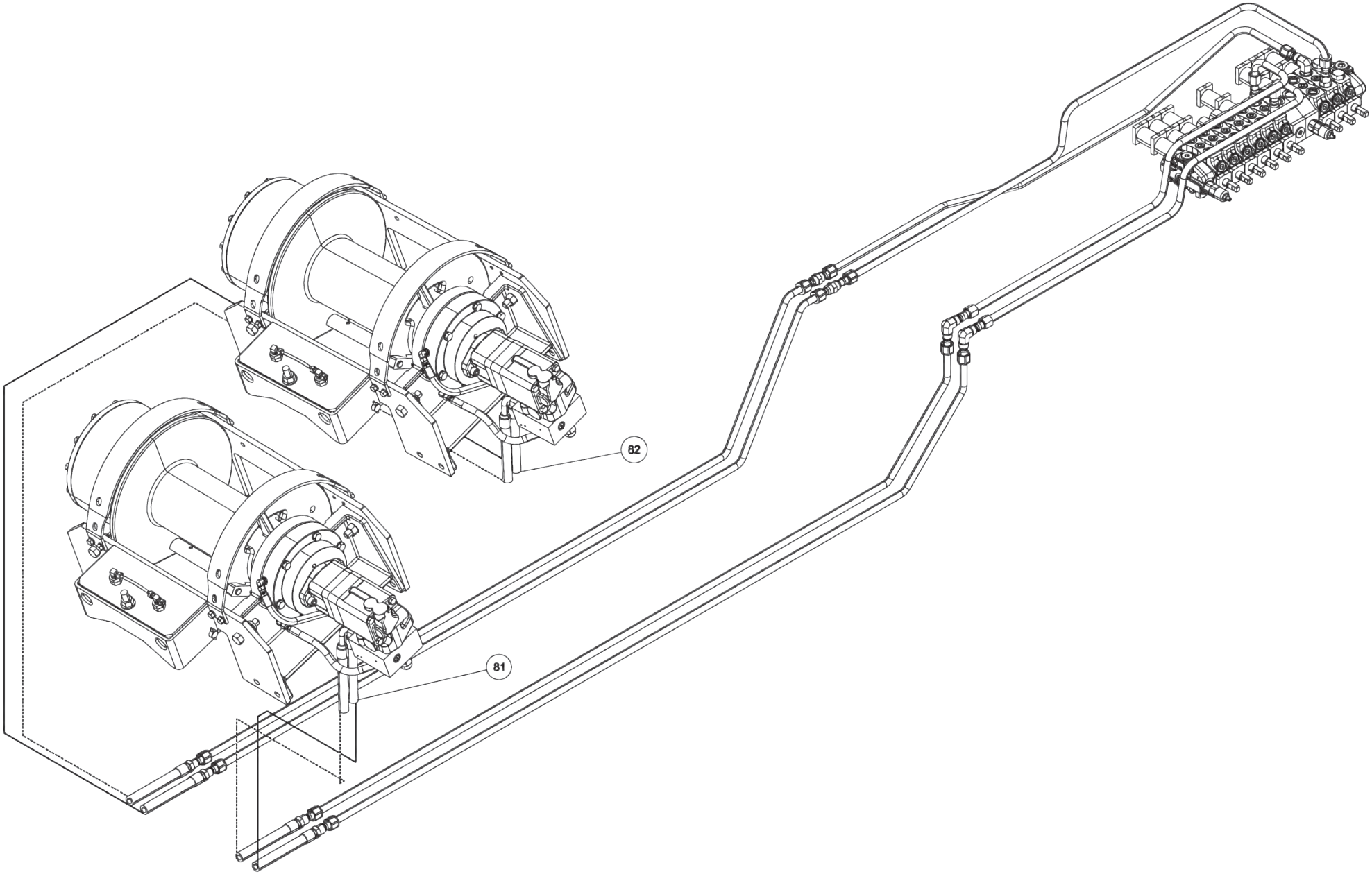

09008489, BUA V70 2-WINCH JACK LEG FLIPPER FEET (cont'd)

ITEM	PART NUMBER	DESCRIPTION	QTY
--	09008489	BUA V70 2W JL FLIPPER FEET	
1	0300341	KNOB, BLACK (BLANK)	12
2	0300364	CLAMP-HOSE,0.875"-2.75" 50"LBS	8
3	0301473	HOSE HYD, 18" LG	4
4	0301696	FITTING, ELB 90 DEG 6MJ-6FJX90	4
5	0301909	RECEPTACLE BOOT	1
6	0301946	FITTING, BLKHD CONNECT	3
7	0301947	FITTING, 45 DEG ADAPTER	1
8	0301948	HD 7 WAY TRAILER CONNECT	1
9	0302205	GAUGE, FLUSH MNTG-6000 PSI	4
10	0302534	FITTING, 45 DEG ELBOW	2
11	0302698	FITTING, HOSE BARB,1-1/4	2
12	0302901	HOSE HYD, 120" 12C12	2
13	0303538	FITT, ADAPTER -BRASS 8FP-6MP	1
14	0303539	QUICK DISCONNECT 3/8 FPT	1
15	0303948	ELBOW, 12MJ-16MB90	2
16	0304363	QUICK DISCONNECT 1/2 FPT	2
17	0306539	HOSE BARB 20HOSE16MB90	2
18	0306983	FITT-MALE RUNTEE 1/4T-1/4NPT	1
19	0307216	LIGHT, AMBER LED RECT 5.25X3.3	2
20	0307538	LIGHT, MRKR-RED LED 4.5 X 1.63	4
21	0307604	KNOB, RED LONG - SK0700-07	4
22	0307778	PLUG, FILLER	2
23	0310010	SUCTION HOSE,1-1/4ID X50 100R4	1
24	0310944	LH 200 CB TDM ALM BDY ‘10 VULC	1
25	0310945	RH 200 CB TDM ALM BDY ‘10 VULC	1
26	0311355	HOBBS HOURMETER	1
27	0311502	LIGHT 6"OVAL CLEAR-AMBER LED	6
28	0311503	GROMMET, LIGHT 6" OVAL	6
29	0311508	LED RECT RED STOP-CLEAR-12/24V	4
30	0311510	LIGHT RECT 12V REVERSE REFLEX	2
31	0311511	GROMMET, TAIL LIGHT, RECTANGULAR	8
32	0311755	WATER SEPARATOR-MONNIER	1
33	04000381	SS BHSCS 1/4-20 X 1	16
34	0400070	SCREW, 1/4-20X1 HHC GR5	6
35	0400128	SCREW, 3/8-16X1-1/4 FHS GR8 BO	24
36	0400369	NUT, 1/4 SPR J	8
37	0400393	NUT, 3/8-16 JAM	16
38	0400451	WASHER, 1/4	6
39	0400454	WASHER, 1/4 SS	22
40	0400491	LKWASHER, 1/2	14
41	0400498	WASHER, 1/2X2X0.125	14

ITEM	PART NUMBER	DESCRIPTION	QTY
42	0400687	SCREW, 10-24X3/4 PRH SS	4
43	0400816	WASHER, M10 SS	4
44	0401054	SCREW, 8-32X3/4 PRH SS	12
45	0402002	NUT, 8-32 LOK EXT SS	12
46	0402020	SCREW, 1/4-20X3/4 HHC SS	2
47	0402021	SCREW, 1/4-20X1 HHC SS	2
48	0402043	SCREW, 3/8-16X1-1/4 HHC SS	8
49	0402111	LKWASHER, 1/4 SS	18
50	0402113	NUT, 1/4-20 LOK SS	2
51	0402120	WASHER, 3/8 SS	16
52	0402121	LKWASHER, 3/8 SS	8
53	0402122	NUT, 3/8-16 HEX SS	8
54	0724476	PAD - NYLATRON - BBOM GUIDE	4
55	0726593	APNL-DCV LWR CTL PNL, 3 WINCH	2
56	0726594	APNL-DCV UPR LH CTL PNL,3WNCH	1
57	0726595	APNL-DCV UPR RH CTL PNL,3WNCH	1
58	0910787	STINGER ASSY - EURO - 144"	1
59	0910973	LH JACK LEG ASSY -FLIPPER FEET	1
60	0910974	RH JACK LEG ASSY -FLIPPER FEET	1
61	0911010	RECOVERY BOOM INSTALL V-70	1
62	0911804	AIR REGULATOR-GAUGE ASSEMBLY	2
63	0912015	SUBFRAME ASSY V70-100 STDWINCH	1
64	9010520	FITTING-ELBOW 1/4T-1/4NPT	4
65	9011053	FITTING, BRASS 1/4 TUBE-1/4 MP	1
66	9016815	MUNCIE PUMP TSPKS17-17-2BSSB	1
67	9024041	SWITCH, ROCKER SPST RED 12V21A	9
68	9041403	1/2 NC X 1 1/2 HHCS PL GR8	14
69	916770001	HOSE- HYD. 3/8 - 105" 8MJ-6MFA	1
70	920400005	MUD FLAP BRACE PLATE	1
71	9402970	TOOLBOX MTG. PAD	14
72	942480011	PLATE,SLOT-SS REAR WASHER TBOX	14
73	942480300	MTG ANGLE WELD'T LH - DCV COV.	2
74	942487300	MTG ANGLE WELD'T RH - DCV COV.	2
75	94320052	MUD FLAP 920-940 RUBBER	2
76	945770002	6AT2(6T90S-8MJ) HCL 48	2
77	945770003	6AT2(6T90L-8MJ) 24 HYD	4
78	946210500	TUBE, FRONT MTG WELD'T	1
79	946770003	HOSE ASSEMBLY - 8MJ-8MJ X 45	4
80	946770006	HOSE ASSEMBLY - 62	1
81	946770007	HOSE ASSEMBLY - 79	1
82	946770009	HOSE ASSEMBLY - 104	1
83	948570000	5X5 LIFT BAR ASSEMBLY 948 XHD	1

09008489, BUA V70 2-WINCH JACK LEG FLIPPER FEET (cont'd)

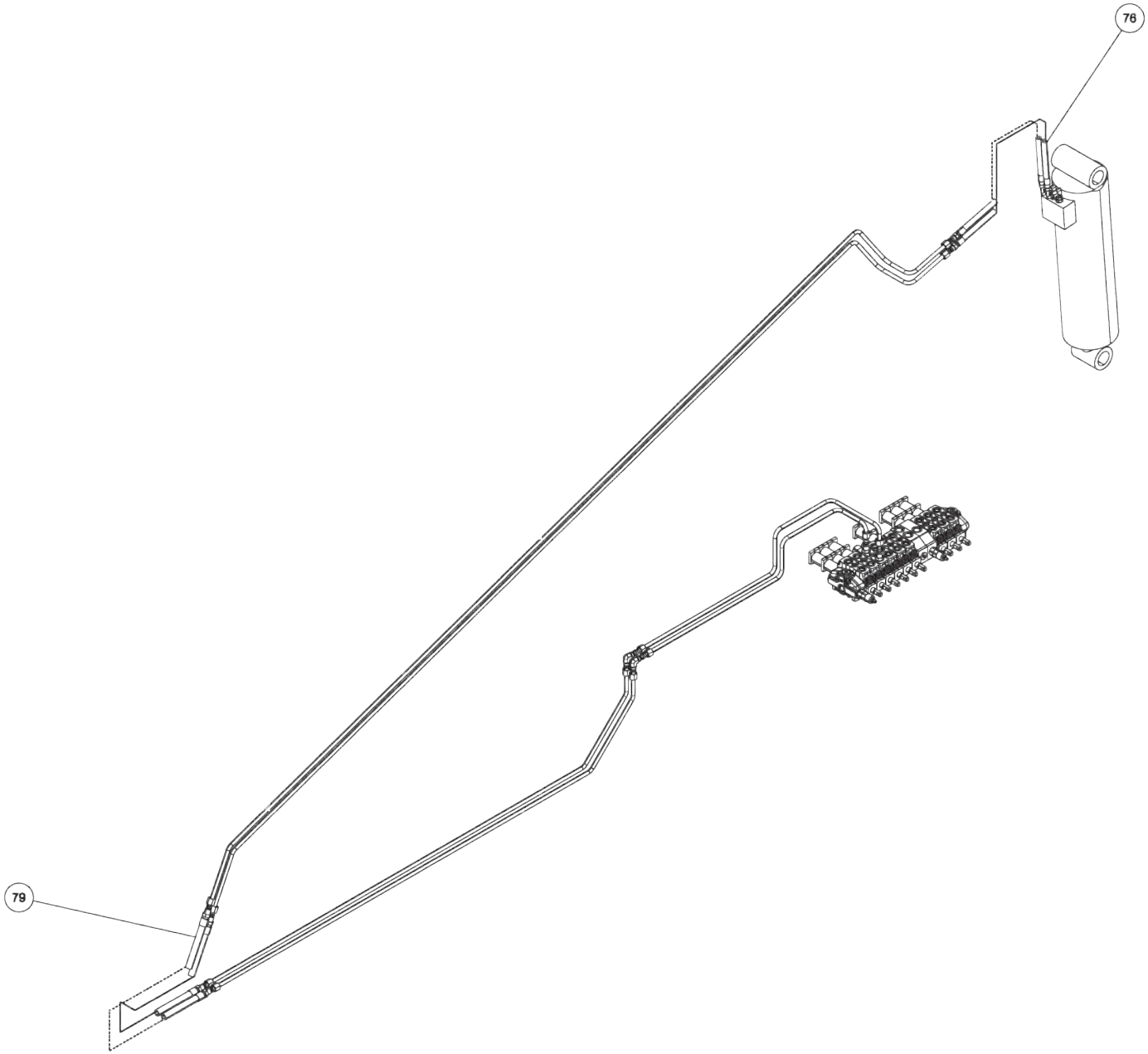

09008489, BUA V70 2-WINCH JACK LEG FLIPPER FEET (cont'd)

ITEM	PART NUMBER	DESCRIPTION	QTY
--	09008489	BUA V70 2W JL FLIPPER FEET	
1	0300341	KNOB, BLACK (BLANK)	12
2	0300364	CLAMP-HOSE,0.875"-2.75" 50"LBS	8
3	0301473	HOSE HYD, 18" LG	4
4	0301696	FITTING, ELB 90 DEG 6MJ-6FJX90	4
5	0301909	RECEPTACLE BOOT	1
6	0301946	FITTING, BLKHD CONNECT	3
7	0301947	FITTING, 45 DEG ADAPTER	1
8	0301948	HD 7 WAY TRAILER CONNECT	1
9	0302205	GAUGE, FLUSH MNTG-6000 PSI	4
10	0302534	FITTING, 45 DEG ELBOW	2
11	0302698	FITTING, HOSE BARB,1-1/4	2
12	0302901	HOSE HYD, 120" 12C12	2
13	0303538	FITT, ADAPTER -BRASS 8FP-6MP	1
14	0303539	QUICK DISCONNECT 3/8 FPT	1
15	0303948	ELBOW, 12MJ-16MB90	2
16	0304363	QUICK DISCONNECT 1/2 FPT	2
17	0306539	HOSE BARB 20HOSE16MB90	2
18	0306983	FITT-MALE RUNTEE 1/4T-1/4NPT	1
19	0307216	LIGHT, AMBER LED RECT 5.25X3.3	2
20	0307538	LIGHT, MRKR-RED LED 4.5 X 1.63	4
21	0307604	KNOB, RED LONG - SK0700-07	4
22	0307778	PLUG, FILLER	2
23	0310010	SUCTION HOSE,1-1/4ID X50 100R4	1
24	0310944	LH 200 CB TDM ALM BDY ‘10 VULC	1
25	0310945	RH 200 CB TDM ALM BDY ‘10 VULC	1
26	0311355	HOBBS HOURMETER	1
27	0311502	LIGHT 6"OVAL CLEAR-AMBER LED	6
28	0311503	GROMMET, LIGHT 6" OVAL	6
29	0311508	LED RECT RED STOP-CLEAR-12/24V	4
30	0311510	LIGHT RECT 12V REVERSE REFLEX	2
31	0311511	GROMMET, TAIL LIGHT, RECTANGULAR	8
32	0311755	WATER SEPARATOR-MONNIER	1
33	04000381	SS BHSCS 1/4-20 X 1	16
34	0400070	SCREW, 1/4-20X1 HHC GR5	6
35	0400128	SCREW, 3/8-16X1-1/4 FHS GR8 BO	24
36	0400369	NUT, 1/4 SPR J	8
37	0400393	NUT, 3/8-16 JAM	16
38	0400451	WASHER, 1/4	6
39	0400454	WASHER, 1/4 SS	22
40	0400491	LKWASHER, 1/2	14
41	0400498	WASHER, 1/2X2X0.125	14

ITEM	PART NUMBER	DESCRIPTION	QTY
42	0400687	SCREW, 10-24X3/4 PRH SS	4
43	0400816	WASHER, M10 SS	4
44	0401054	SCREW, 8-32X3/4 PRH SS	12
45	0402002	NUT, 8-32 LOK EXT SS	12
46	0402020	SCREW, 1/4-20X3/4 HHC SS	2
47	0402021	SCREW, 1/4-20X1 HHC SS	2
48	0402043	SCREW, 3/8-16X1-1/4 HHC SS	8
49	0402111	LKWASHER, 1/4 SS	18
50	0402113	NUT, 1/4-20 LOK SS	2
51	0402120	WASHER, 3/8 SS	16
52	0402121	LKWASHER, 3/8 SS	8
53	0402122	NUT, 3/8-16 HEX SS	8
54	0724476	PAD - NYLATRON - BBOM GUIDE	4
55	0726593	APNL-DCV LWR CTL PNL, 3 WINCH	2
56	0726594	APNL-DCV UPR LH CTL PNL,3WNCH	1
57	0726595	APNL-DCV UPR RH CTL PNL,3WNCH	1
58	0910787	STINGER ASSY - EURO - 144"	1
59	0910973	LH JACK LEG ASSY -FLIPPER FEET	1
60	0910974	RH JACK LEG ASSY -FLIPPER FEET	1
61	0911010	RECOVERY BOOM INSTALL V-70	1
62	0911804	AIR REGULATOR-GAUGE ASSEMBLY	2
63	0912015	SUBFRAME ASSY V70-100 STDWINCH	1
64	9010520	FITTING-ELBOW 1/4T-1/4NPT	4
65	9011053	FITTING, BRASS 1/4 TUBE-1/4 MP	1
66	9016815	MUNCIE PUMP TSPKS17-17-2BSSB	1
67	9024041	SWITCH, ROCKER SPST RED 12V21A	9
68	9041403	1/2 NC X 1 1/2 HHCS PL GR8	14
69	916770001	HOSE- HYD. 3/8 - 105" 8MJ-6MFA	1
70	920400005	MUD FLAP BRACE PLATE	1
71	9402970	TOOLBOX MTG. PAD	14
72	942480011	PLATE,SLOT-SS REAR WASHER TBOX	14
73	942480300	MTG ANGLE WELD'T LH - DCV COV.	2
74	942487300	MTG ANGLE WELD'T RH - DCV COV.	2
75	94320052	MUD FLAP 920-940 RUBBER	2
76	945770002	6AT2(6T90S-8MJ) HCL 48	2
77	945770003	6AT2(6T90L-8MJ) 24 HYD	4
78	946210500	TUBE, FRONT MTG WELD'T	1
79	946770003	HOSE ASSEMBLY - 8MJ-8MJ X 45	4
80	946770006	HOSE ASSEMBLY - 62	1
81	946770007	HOSE ASSEMBLY - 79	1
82	946770009	HOSE ASSEMBLY - 104	1
83	948570000	5X5 LIFT BAR ASSEMBLY 948 XHD	1

09008489, BUA V70 2-WINCH JACK LEG FLIPPER FEET (cont'd)

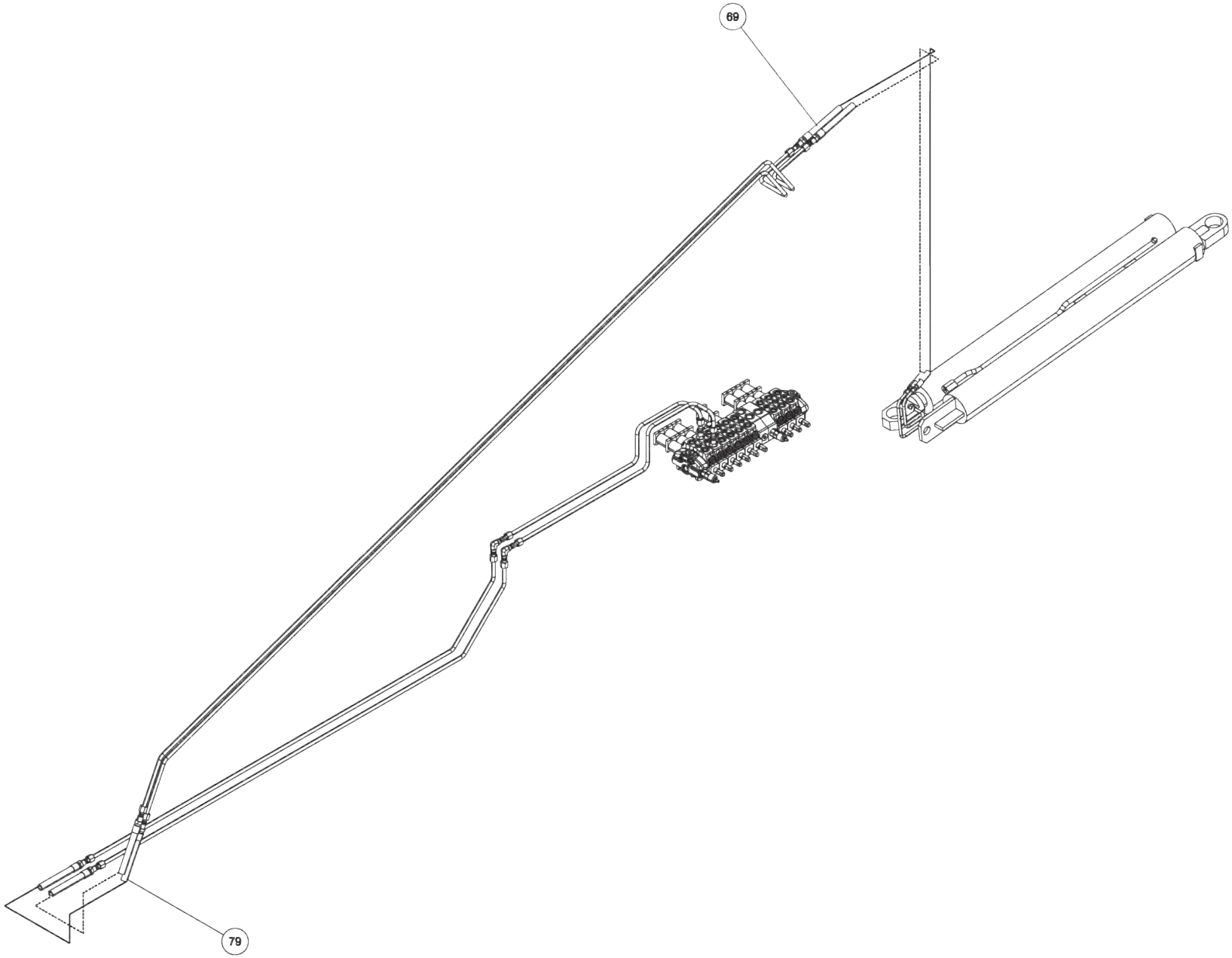

09008489, BUA V70 2-WINCH JACK LEG FLIPPER FEET (cont'd)

ITEM	PART NUMBER	DESCRIPTION	QTY
--	09008489	BUA V70 2W JL FLIPPER FEET	
1	0300341	KNOB, BLACK (BLANK)	12
2	0300364	CLAMP-HOSE,0.875"-2.75" 50"LBS	8
3	0301473	HOSE HYD, 18" LG	4
4	0301696	FITTING, ELB 90 DEG 6MJ-6FJX90	4
5	0301909	RECEPTACLE BOOT	1
6	0301946	FITTING, BLKHD CONNECT	3
7	0301947	FITTING, 45 DEG ADAPTER	1
8	0301948	HD 7 WAY TRAILER CONNECT	1
9	0302205	GAUGE, FLUSH MNTG-6000 PSI	4
10	0302534	FITTING, 45 DEG ELBOW	2
11	0302698	FITTING, HOSE BARB,1-1/4	2
12	0302901	HOSE HYD, 120" 12C12	2
13	0303538	FITT, ADAPTER -BRASS 8FP-6MP	1
14	0303539	QUICK DISCONNECT 3/8 FPT	1
15	0303948	ELBOW, 12MJ-16MB90	2
16	0304363	QUICK DISCONNECT 1/2 FPT	2
17	0306539	HOSE BARB 20HOSE16MB90	2
18	0306983	FITT-MALE RUNTEE 1/4T-1/4NPT	1
19	0307216	LIGHT, AMBER LED RECT 5.25X3.3	2
20	0307538	LIGHT, MRKR-RED LED 4.5 X 1.63	4
21	0307604	KNOB, RED LONG - SK0700-07	4
22	0307778	PLUG, FILLER	2
23	0310010	SUCTION HOSE,1-1/4ID X50 100R4	1
24	0310944	LH 200 CB TDM ALM BDY ‘10 VULC	1
25	0310945	RH 200 CB TDM ALM BDY ‘10 VULC	1
26	0311355	HOBBS HOURMETER	1
27	0311502	LIGHT 6"OVAL CLEAR-AMBER LED	6
28	0311503	GROMMET, LIGHT 6" OVAL	6
29	0311508	LED RECT RED STOP-CLEAR-12/24V	4
30	0311510	LIGHT RECT 12V REVERSE REFLEX	2
31	0311511	GROMMET, TAIL LIGHT, RECTANGULAR	8
32	0311755	WATER SEPARATOR-MONNIER	1
33	04000381	SS BHSCS 1/4-20 X 1	16
34	0400070	SCREW, 1/4-20X1 HHC GR5	6
35	0400128	SCREW, 3/8-16X1-1/4 FHS GR8 BO	24
36	0400369	NUT, 1/4 SPR J	8
37	0400393	NUT, 3/8-16 JAM	16
38	0400451	WASHER, 1/4	6
39	0400454	WASHER, 1/4 SS	22
40	0400491	LKWASHER, 1/2	14
41	0400498	WASHER, 1/2X2X0.125	14

ITEM	PART NUMBER	DESCRIPTION	QTY
42	0400687	SCREW, 10-24X3/4 PRH SS	4
43	0400816	WASHER, M10 SS	4
44	0401054	SCREW, 8-32X3/4 PRH SS	12
45	0402002	NUT, 8-32 LOK EXT SS	12
46	0402020	SCREW, 1/4-20X3/4 HHC SS	2
47	0402021	SCREW, 1/4-20X1 HHC SS	2
48	0402043	SCREW, 3/8-16X1-1/4 HHC SS	8
49	0402111	LKWASHER, 1/4 SS	18
50	0402113	NUT, 1/4-20 LOK SS	2
51	0402120	WASHER, 3/8 SS	16
52	0402121	LKWASHER, 3/8 SS	8
53	0402122	NUT, 3/8-16 HEX SS	8
54	0724476	PAD - NYLATRON - BBOM GUIDE	4
55	0726593	APNL-DCV LWR CTL PNL, 3 WINCH	2
56	0726594	APNL-DCV UPR LH CTL PNL,3WNCH	1
57	0726595	APNL-DCV UPR RH CTL PNL,3WNCH	1
58	0910787	STINGER ASSY - EURO - 144"	1
59	0910973	LH JACK LEG ASSY -FLIPPER FEET	1
60	0910974	RH JACK LEG ASSY -FLIPPER FEET	1
61	0911010	RECOVERY BOOM INSTALL V-70	1
62	0911804	AIR REGULATOR-GAUGE ASSEMBLY	2
63	0912015	SUBFRAME ASSY V70-100 STDWINCH	1
64	9010520	FITTING-ELBOW 1/4T-1/4NPT	4
65	9011053	FITTING, BRASS 1/4 TUBE-1/4 MP	1
66	9016815	MUNCIE PUMP TSPKS17-17-2BSSB	1
67	9024041	SWITCH, ROCKER SPST RED 12V21A	9
68	9041403	1/2 NC X 1 1/2 HHCS PL GR8	14
69	916770001	HOSE- HYD. 3/8 - 105" 8MJ-6MFA	1
70	920400005	MUD FLAP BRACE PLATE	1
71	9402970	TOOLBOX MTG. PAD	14
72	942480011	PLATE,SLOT-SS REAR WASHER TBOX	14
73	942480300	MTG ANGLE WELD'T LH - DCV COV.	2
74	942487300	MTG ANGLE WELD'T RH - DCV COV.	2
75	94320052	MUD FLAP 920-940 RUBBER	2
76	945770002	6AT2(6T90S-8MJ) HCL 48	2
77	945770003	6AT2(6T90L-8MJ) 24 HYD	4
78	946210500	TUBE, FRONT MTG WELD'T	1
79	946770003	HOSE ASSEMBLY - 8MJ-8MJ X 45	4
80	946770006	HOSE ASSEMBLY - 62	1
81	946770007	HOSE ASSEMBLY - 79	1
82	946770009	HOSE ASSEMBLY - 104	1
83	948570000	5X5 LIFT BAR ASSEMBLY 948 XHD	1

0910973, LH JACK LEG ASSY - FLIPPER FEET

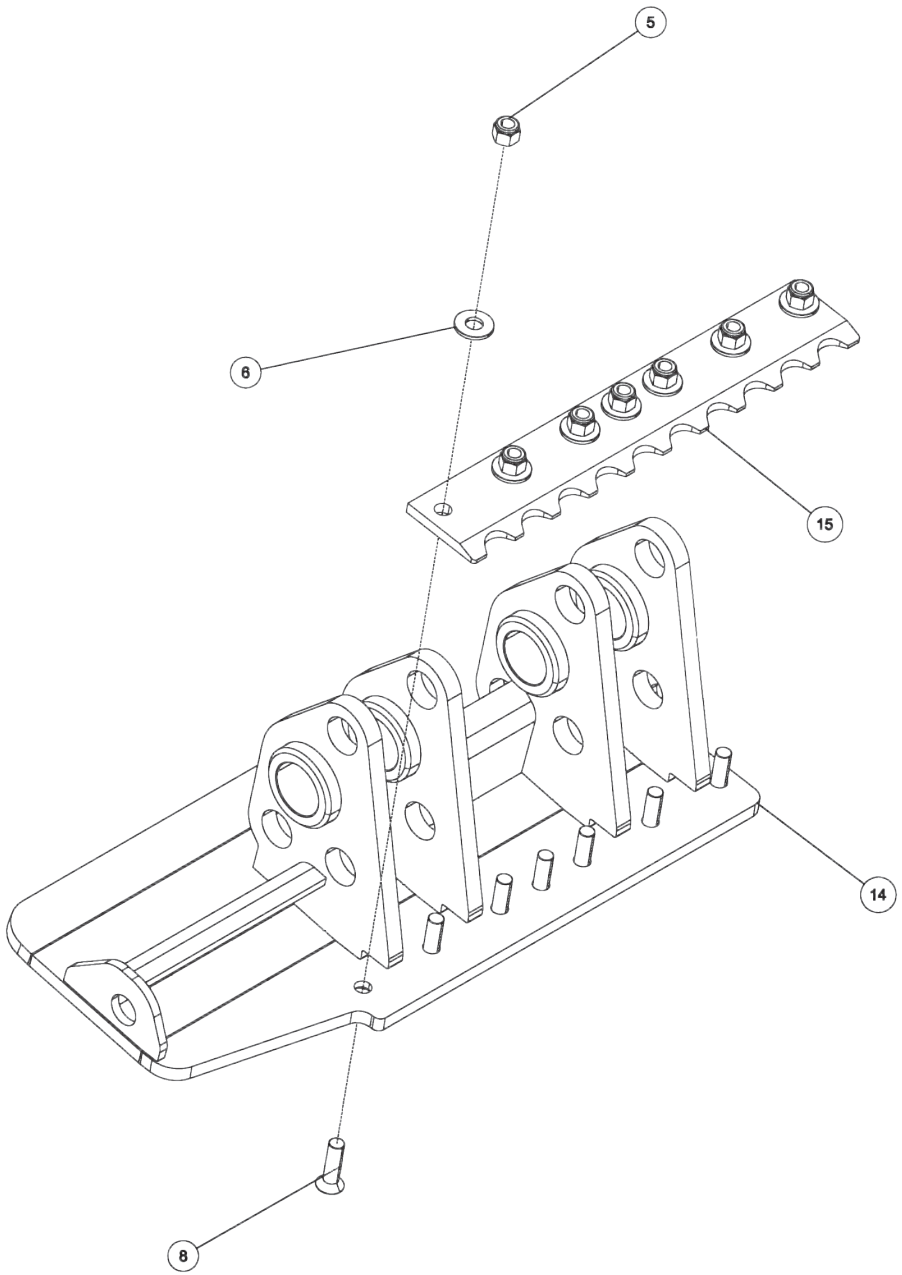

0910973, LH JACK LEG ASSY - FLIPPER FEET (cont'd)

ITEM	PART NUMBER	DESCRIPTION	QTY
--	0910973	LH JACK LEG ASSY -FLIPPER FEET	
1	0300113	GREASE FITTING, 1/4-28 STR	2
2	0301895	GREASE FITTING, 1/8 STR PTF	1
3	0301959	SNAP RING-INTERNAL 1-1/2	2
4	0310121	RETAINING RING, 1.75 HD EXT	4
5	0400416	NUT, 1/2-13 LOK GR8	7
6	0400497	WASHER, 1/2 GR8	7
7	0400568	PIN, 3/8X3 SPR	1
8	0400774	SCREW, 1/2-13X1-3/4 FHS	7
9	0719585	D-RING, TOWING	1
10	0724500	PIN - LOWER JACK LEG CYL	1
11	0807725	LH JACK LEG WELDT-FLIPPER FEET	1
12	930230101	PIN - PIVOT	2
13	930230103	PIN - D-RING	1
14	930232000	LH FLIPPER PAD WELDT	1
15	930232005	BLADE - GROUND	1
16	930233000	PIN, RETAINER ASSY	1
17	HD1259	SAFETY SNAP PIN	1

0910973, LH JACK LEG ASSY - FLIPPER FEET (cont'd)

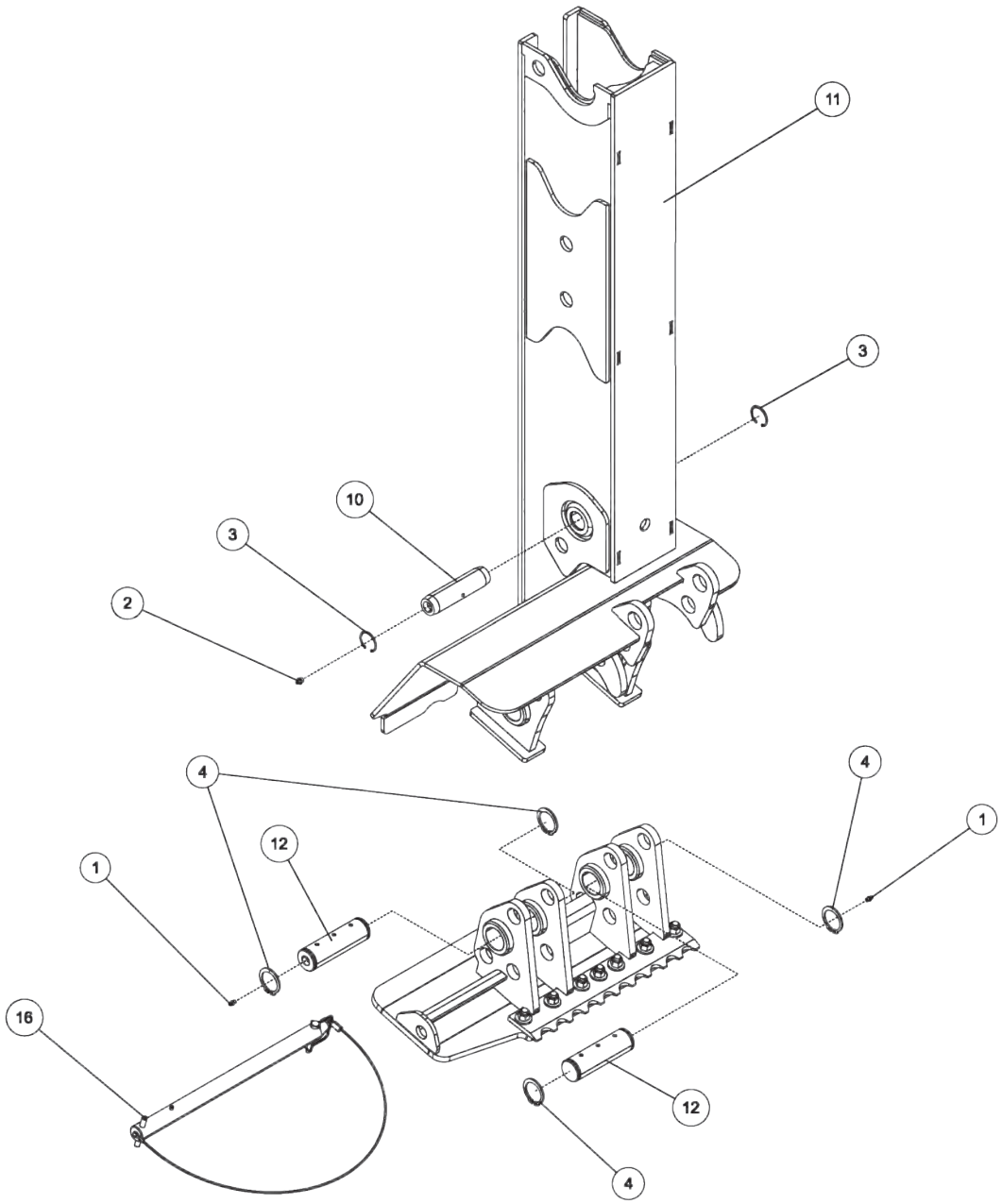

0910973, LH JACK LEG ASSY - FLIPPER FEET (cont'd)

ITEM	PART NUMBER	DESCRIPTION	QTY
--	0910973	LH JACK LEG ASSY -FLIPPER FEET	
1	0300113	GREASE FITTING, 1/4-28 STR	2
2	0301895	GREASE FITTING, 1/8 STR PTF	1
3	0301959	SNAP RING-INTERNAL 1-1/2	2
4	0310121	RETAINING RING, 1.75 HD EXT	4
5	0400416	NUT, 1/2-13 LOK GR8	7
6	0400497	WASHER, 1/2 GR8	7
7	0400568	PIN, 3/8X3 SPR	1
8	0400774	SCREW, 1/2-13X1-3/4 FHS	7
9	0719585	D-RING, TOWING	1
10	0724500	PIN - LOWER JACK LEG CYL	1
11	0807725	LH JACK LEG WELDT-FLIPPER FEET	1
12	930230101	PIN - PIVOT	2
13	930230103	PIN - D-RING	1
14	930232000	LH FLIPPER PAD WELDT	1
15	930232005	BLADE - GROUND	1
16	930233000	PIN, RETAINER ASSY	1
17	HD1259	SAFETY SNAP PIN	1

0910973, LH JACK LEG ASSY - FLIPPER FEET (cont'd)

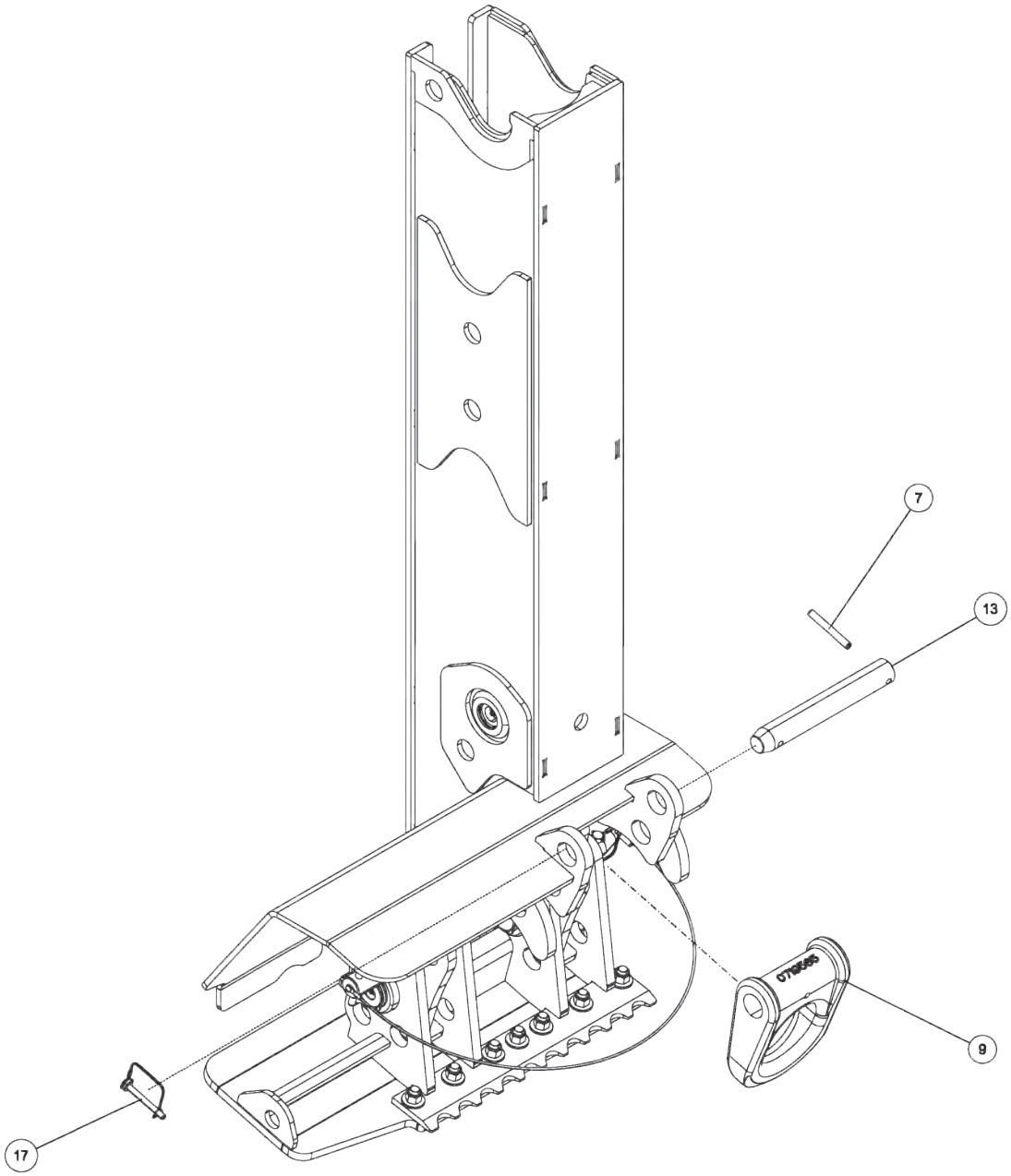

0910973, LH JACK LEG ASSY - FLIPPER FEET (cont'd)

ITEM	PART NUMBER	DESCRIPTION	QTY
--	0910973	LH JACK LEG ASSY -FLIPPER FEET	
1	0300113	GREASE FITTING, 1/4-28 STR	2
2	0301895	GREASE FITTING, 1/8 STR PTF	1
3	0301959	SNAP RING-INTERNAL 1-1/2	2
4	0310121	RETAINING RING, 1.75 HD EXT	4
5	0400416	NUT, 1/2-13 LOK GR8	7
6	0400497	WASHER, 1/2 GR8	7
7	0400568	PIN, 3/8X3 SPR	1
8	0400774	SCREW, 1/2-13X1-3/4 FHS	7
9	0719585	D-RING, TOWING	1
10	0724500	PIN - LOWER JACK LEG CYL	1
11	0807725	LH JACK LEG WELDT-FLIPPER FEET	1
12	930230101	PIN - PIVOT	2
13	930230103	PIN - D-RING	1
14	930232000	LH FLIPPER PAD WELDT	1
15	930232005	BLADE - GROUND	1
16	930233000	PIN, RETAINER ASSY	1
17	HD1259	SAFETY SNAP PIN	1

0910974, RH JACK LEG ASSY - FLIPPER FEET

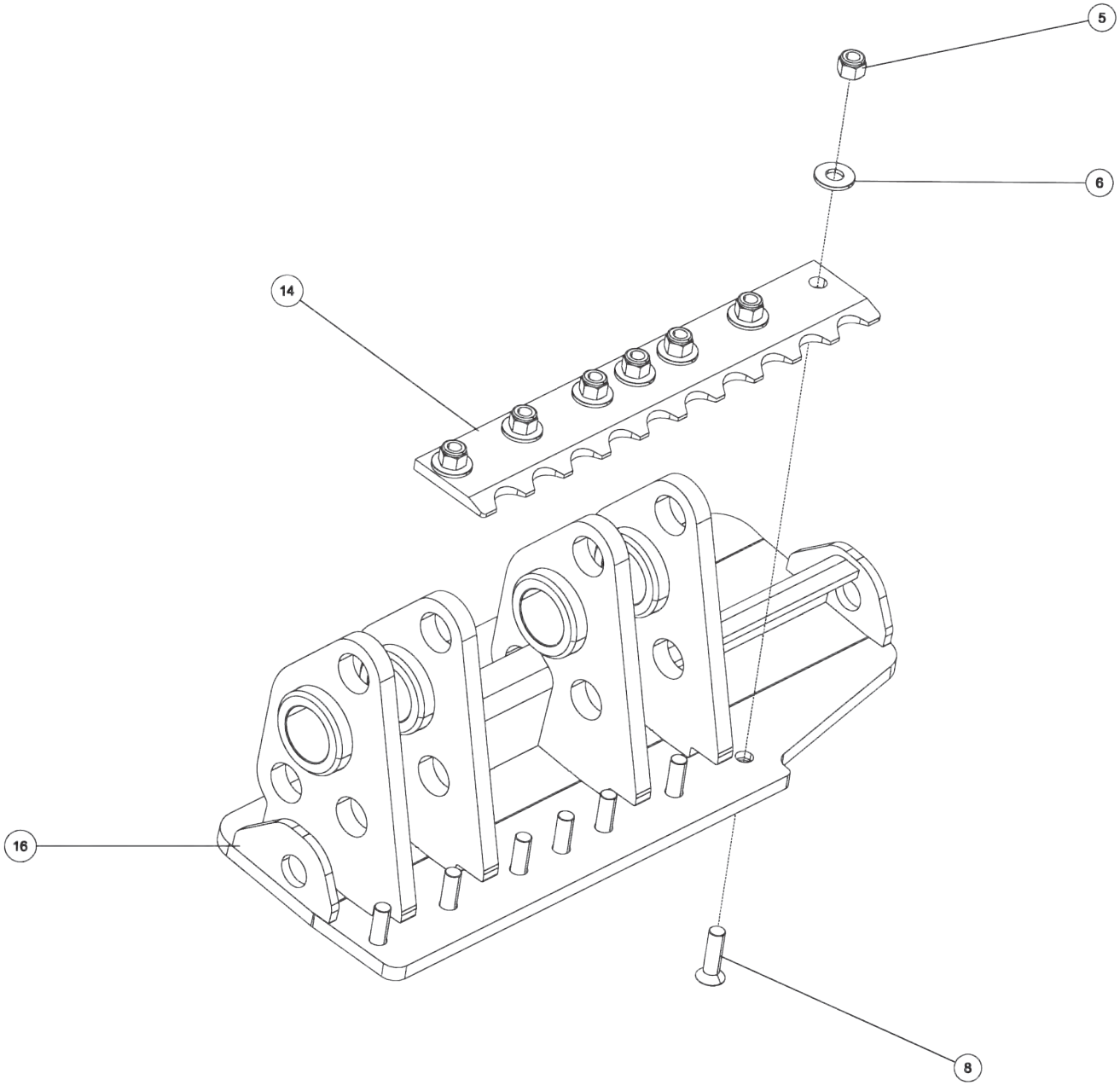

0910974, RH JACK LEG ASSY - FLIPPER FEET (cont'd)

ITEM	PART NUMBER	DESCRIPTION	QTY
--	0910974	RH JACK LEG ASSY - FLIPPER FEET	
1	0300113	GREASE FITTING, 1/4-28 STR	2
2	0301895	GREASE FITTING, 1/8 STR PTF	1
3	0301959	SNAP RING-INTERNAL 1-1/2	2
4	0310121	RETAINING RING, 1.75 HD EXT	4
5	0400416	NUT, 1/2-13 LOK GR8	7
6	0400497	WASHER, 1/2 GR8	7
7	0400568	PIN, 3/8X3 SPR	1
8	0400774	SCREW, 1/2-13X1-3/4 FHS	7
9	0719585	D-RING, TOWING	1
10	0724500	PIN - LOWER JACK LEG CYL	1
11	0807726	RH JACK LEG WELDT-FLIPPER FEET	1
12	930230101	PIN - PIVOT	2
13	930230103	PIN - D-RING	1
14	930232005	BLADE - GROUND	1
15	930233000	PIN, RETAINER ASSY	1
16	930239000	RH FLIPPER PAD WELDT	1
17	HD1259	SAFETY SNAP PIN	1

0910974, RH JACK LEG ASSY - FLIPPER FEET (cont'd)

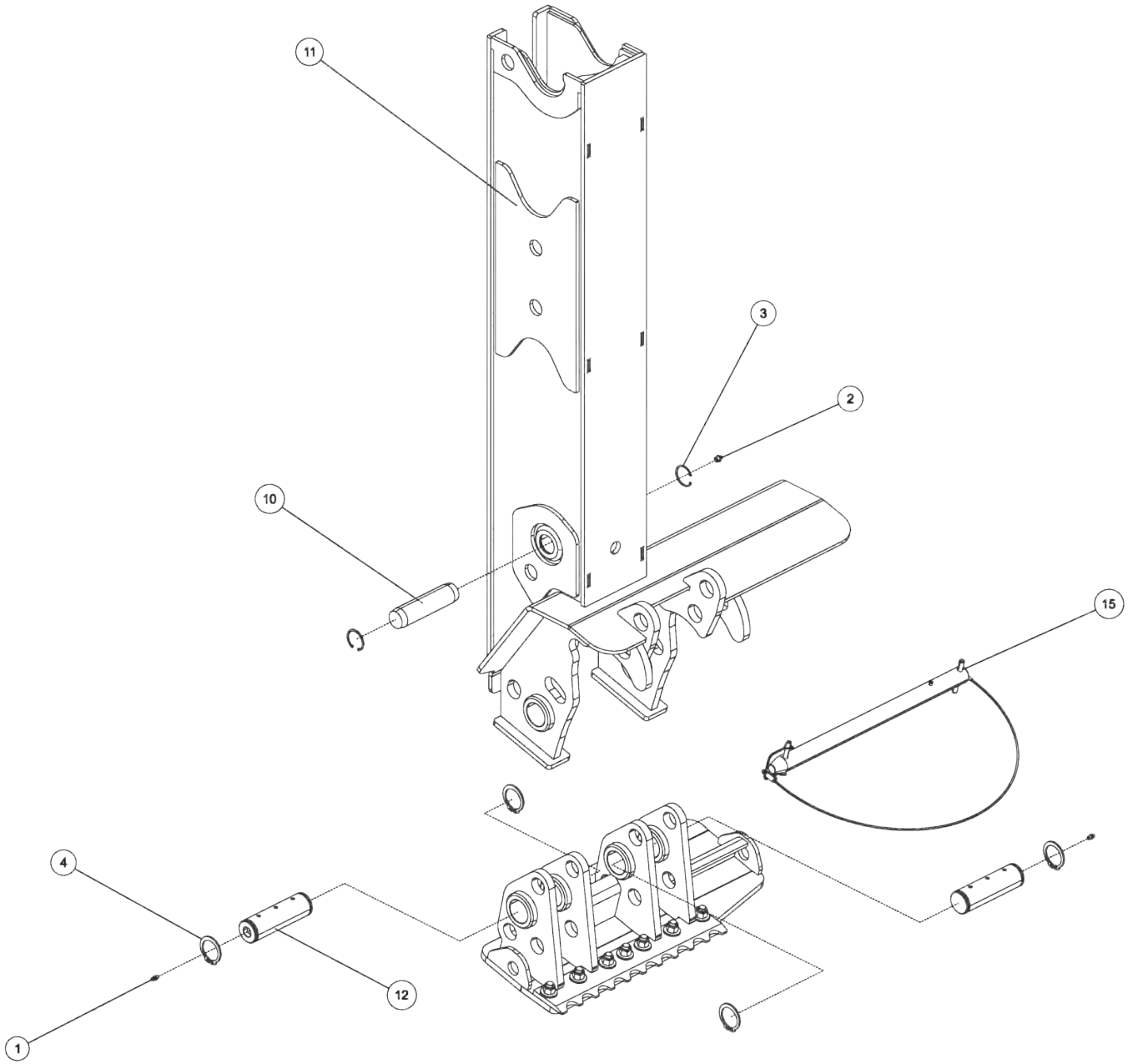

0910974, RH JACK LEG ASSY - FLIPPER FEET (cont'd)

ITEM	PART NUMBER	DESCRIPTION	QTY
--	0910974	RH JACK LEG ASSY - FLIPPER FEET	
1	0300113	GREASE FITTING, 1/4-28 STR	2
2	0301895	GREASE FITTING, 1/8 STR PTF	1
3	0301959	SNAP RING-INTERNAL 1-1/2	2
4	0310121	RETAINING RING, 1.75 HD EXT	4
5	0400416	NUT, 1/2-13 LOK GR8	7
6	0400497	WASHER, 1/2 GR8	7
7	0400568	PIN, 3/8X3 SPR	1
8	0400774	SCREW, 1/2-13X1-3/4 FHS	7
9	0719585	D-RING, TOWING	1
10	0724500	PIN - LOWER JACK LEG CYL	1
11	0807726	RH JACK LEG WELDT-FLIPPER FEET	1
12	930230101	PIN - PIVOT	2
13	930230103	PIN - D-RING	1
14	930232005	BLADE - GROUND	1
15	930233000	PIN, RETAINER ASSY	1
16	930239000	RH FLIPPER PAD WELDT	1
17	HD1259	SAFETY SNAP PIN	1

0910974, RH JACK LEG ASSY - FLIPPER FEET (cont'd)

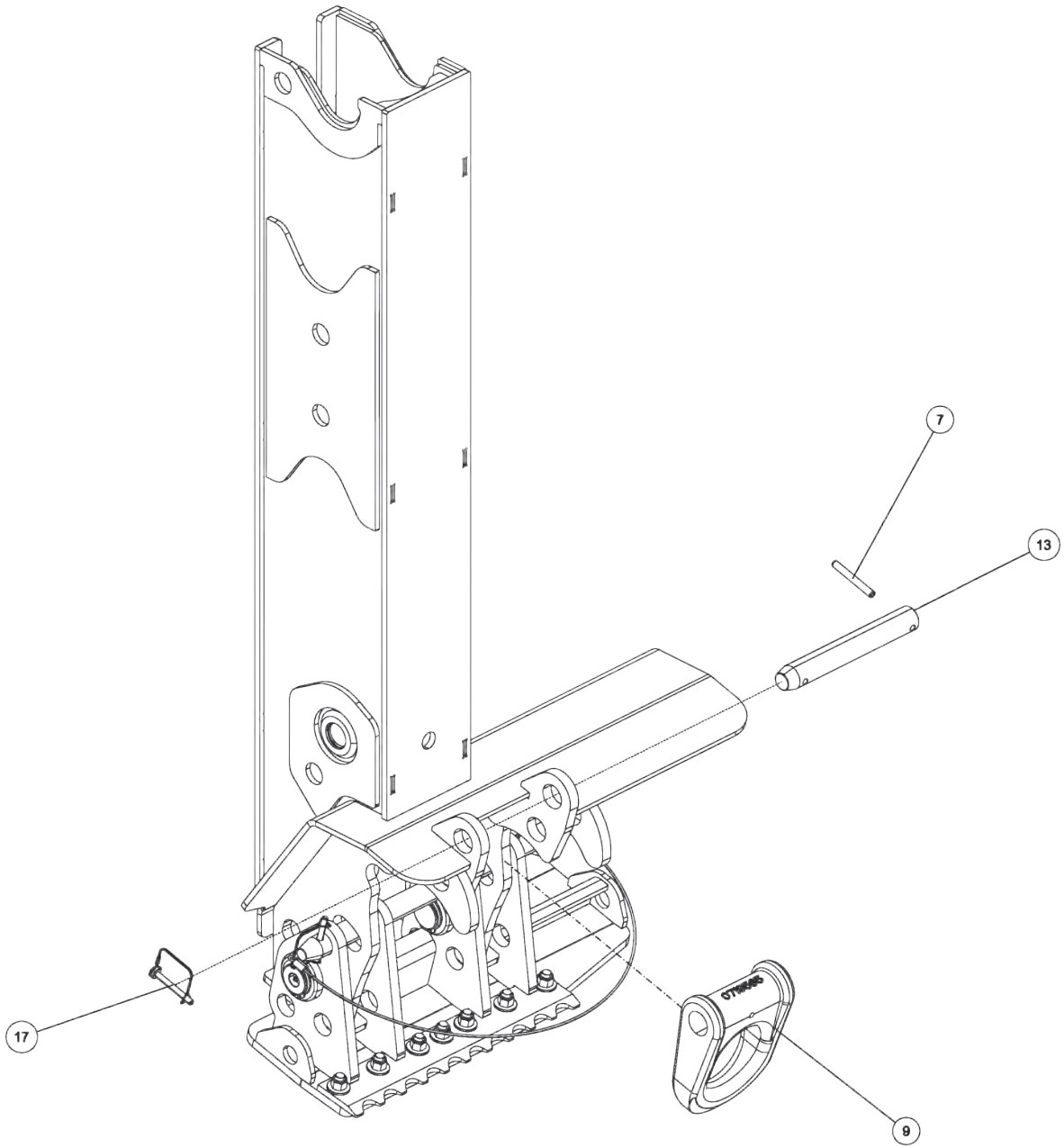

0910974, RH JACK LEG ASSY - FLIPPER FEET (cont'd)

ITEM	PART NUMBER	DESCRIPTION	QTY
--	0910974	RH JACK LEG ASSY - FLIPPER FEET	
1	0300113	GREASE FITTING, 1/4-28 STR	2
2	0301895	GREASE FITTING, 1/8 STR PTF	1
3	0301959	SNAP RING-INTERNAL 1-1/2	2
4	0310121	RETAINING RING, 1.75 HD EXT	4
5	0400416	NUT, 1/2-13 LOK GR8	7
6	0400497	WASHER, 1/2 GR8	7
7	0400568	PIN, 3/8X3 SPR	1
8	0400774	SCREW, 1/2-13X1-3/4 FHS	7
9	0719585	D-RING, TOWING	1
10	0724500	PIN - LOWER JACK LEG CYL	1
11	0807726	RH JACK LEG WELDT-FLIPPER FEET	1
12	930230101	PIN - PIVOT	2
13	930230103	PIN - D-RING	1
14	930232005	BLADE - GROUND	1
15	930233000	PIN, RETAINER ASSY	1
16	930239000	RH FLIPPER PAD WELDT	1
17	HD1259	SAFETY SNAP PIN	1

09008490, BUA V70 2-WINCH REAR OUTRIGGER

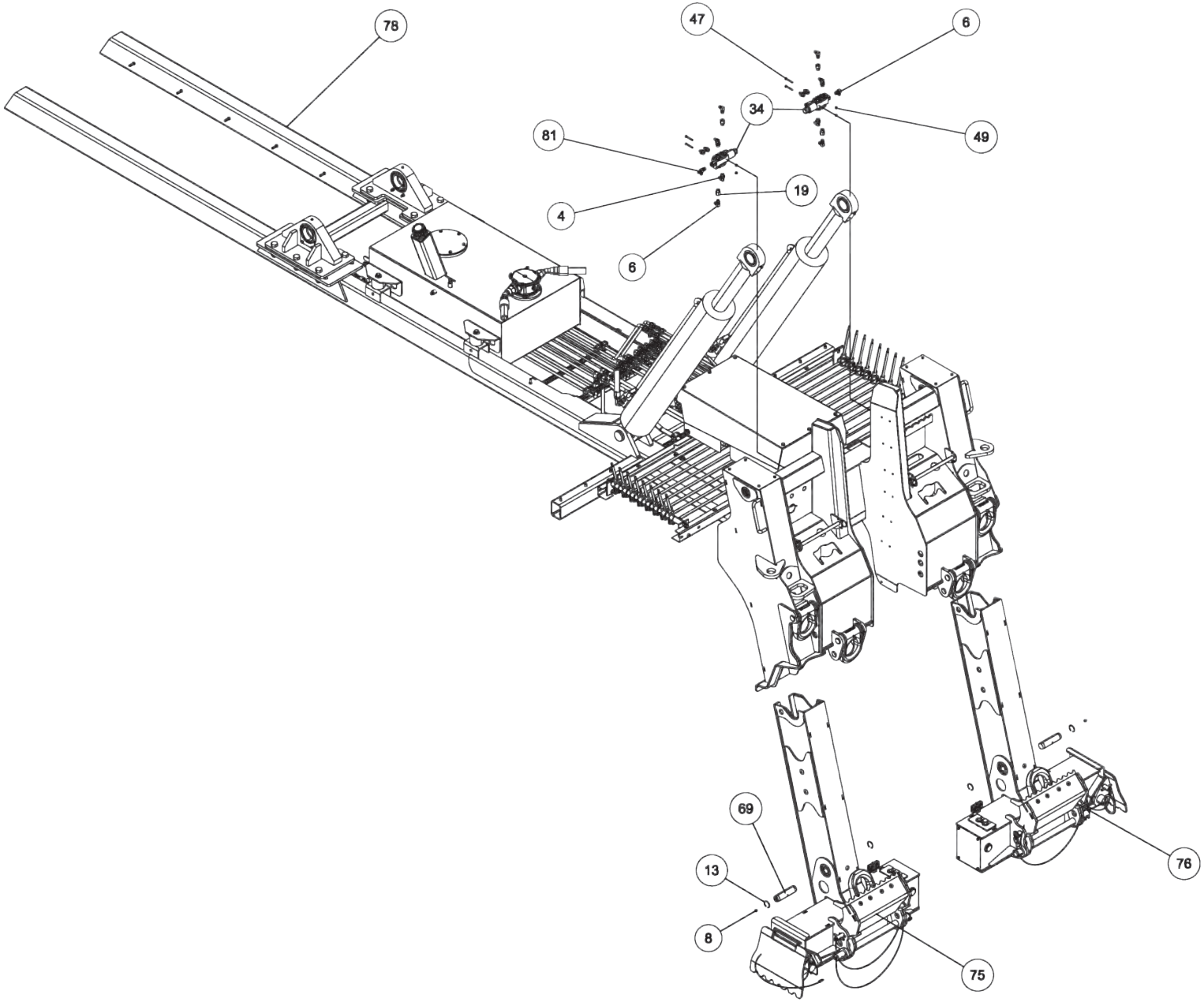

09008490, BUA V70 2-WINCH REAR OUTRIGGER (cont'd)

ITEM	PART NUMBER	DESCRIPTION	QTY
--	09008490	BUA V70 2W REAR OUTRIGGER	
1	0300044	FITT, HYD CONN. 6MJ-8MB	4
2	0300341	KNOB, BLACK (BLANK)	12
3	0300364	CLAMP-HOSE,0.875"-2.75" 50"LBS	8
4	0301470	FITTING, 90ELB 6MJ-8MB90	4
5	0301473	HOSE HYD, 18" LG	4
6	0301620	FITTING, HYD. 6MJ - 6MB90	5
7	0301696	FITTING, ELB 90 DEG 6MJ-6FJX90	5
8	0301895	GREASE FITTING, 1/8 STR PTF	2
9	0301909	RECEPTACLE BOOT	1
10	0301946	FITTING, BLKHD CONNECT	3
11	0301947	FITTING, 45 DEG ADAPTER	1
12	0301948	HD 7 WAY TRAILER CONNECT	1
13	0301959	SNAP RING-INTERNAL 1-1/2	4
14	0301998	HOSE HYD, 24" LG	4
15	0302205	GAUGE, FLUSH MNTG-6000 PSI	4
16	0302534	FITTING, 45 DEG ELBOW	2
17	0302698	FITTING, HOSE BARB,1-1/4	2
18	0302901	HOSE HYD, 120" 12C12	2
19	0303017	FITTING, CONNECTOR	4
20	0303170	HOSE, HYD. 75"	1
21	0303185	HOSE HYD, 66" LG.	1
22	0303538	FITT, ADAPTER -BRASS 8FP-6MP	1
23	0303539	QUICK DISCONNECT 3/8 FPT	1
24	0303948	ELBOW, 12MJ-16MB90	2
25	0304363	QUICK DISCONNECT 1/2 FPT	2
26	0306539	HOSE BARB 20HOSE16MB90	2
27	0306983	FITT-MALE RUNTEE 1/4T-1/4NPT	1
28	0307216	LIGHT, AMBER LED RECT 5.25x3.3	2
29	0307525	HOSE, HYD ASSY 120" LGTH 90L	4
30	0307538	LIGHT, MRKR-RED LED 4.5 X 1.63	4
31	0307604	KNOB, RED LONG - SK0700-07	4
32	0307778	PLUG, FILLER	2
33	0310010	SUCTION HOSE,1-1/4ID x50 100R4	1
34	0310881	6 WAY DIVERTER VALVE-12V	2
35	0310944	LH 200 CB TDM ALM BDY '10 VULC	1
36	0310945	RH 200 CB TDM ALM BDY '10 VULC	1
37	0311355	HOBBS HOURMETER	1
38	0311502	LIGHT 6"OVAL CLEAR-AMBER LED	6
39	0311503	GROMMET, LIGHT 6" OVAL	6
40	0311508	LED RECT RED STOP-CLEAR-12/24V	4
41	0311510	LIGHT RECT 12V REVERSE REFLEX	2
42	0311511	GROMMET, TAIL LIGHT, RECTANGULAR	8
43	0311755	WATER SEPARATOR-MONNIER	1
44	0312622	FITTING, 16FJ-6MJ	1
45	04000381	SS BHSCS 1/4-20 X 1	16
46	0400070	SCREW, 1/4-20X1 HHC GR5	6
47	0400078	SCREW, 1/4-20X2 HHC GR5	4
48	0400128	SCREW, 3/8-16X1-1/4 FHS GR8 BO	24
49	0400367	NUT, 1/4-20 LOK	4
50	0400369	NUT, 1/4 SPR J	8

ITEM	PART NUMBER	DESCRIPTION	QTY
51	0400393	NUT, 3/8-16 JAM	16
52	0400451	WASHER, 1/4	6
53	0400454	WASHER, 1/4 SS	22
54	0400491	LKWASHER, 1/2	14
55	0400498	WASHER, 1/2X2X0.125	14
56	0400687	SCREW, 10-24X3/4 PRH SS	4
57	0400816	WASHER, M10 SS	4
58	0401054	SCREW, 8-32X3/4 PRH SS	12
59	0402002	NUT, 8-32 LOK EXT SS	12
60	0402020	SCREW, 1/4-20X3/4 HHC SS	2
61	0402021	SCREW, 1/4-20X1 HHC SS	2
62	0402043	SCREW, 3/8-16X1-1/4 HHC SS	8
63	0402111	LKWASHER, 1/4 SS	18
64	0402113	NUT, 1/4-20 LOK SS	2
65	0402120	WASHER, 3/8 SS	16
66	0402121	LKWASHER, 3/8 SS	8
67	0402122	NUT, 3/8-16 HEX SS	8
68	0724476	PAD - NYLATRON - BBOM GUIDE	4
69	0724500	PIN - LOWER JACK LEG CYL	2
70	0726593	APNL-DCV LWR CTL PNL, 3 WINCH	2
71	0726594	APNL-DCV UPR LH CTL PNL,3WNCH	1
72	0726595	APNL-DCV UPR RH CTL PNL,3WNCH	1
73	0910787	STINGER ASSY - EURO - 144"	1
74	0911010	RECOVERY BOOM INSTALL V-70	1
75	0911120	LH REAR OUTRIGGER ASSY	1
76	0911121	RH REAR OUTRIGGER ASSY	1
77	0911804	AIR REGULATOR-GAUGE ASSEMBLY	2
78	0912015	SUBFRAME ASSY V70-100 STDWINCH	1
79	9010520	FITTING-ELBOW 1/4T-1/4NPT	2
80	9011053	FITTING, BRASS 1/4 TUBE-1/4 MP	1
81	9012594	FITT,HYD RUN TEE, 6MJx6MBx6MJ	1
82	9016815	MUNCIE PUMP TSPKS17-17-2BSSB	1
83	9024041	SWITCH, ROCKER SPST RED 12V21A	11
84	9041403	1/2 NC X 1 1/2 HHCS PL GR8	14
85	916770001	HOSE- HYD. 3/8 - 105" 8MJ-6MFA	2
86	920400005	MUD FLAP BRACE PLATE	2
87	9402970	TOOLBOX MTG. PAD	14
88	942480011	PLATE,SLOT-SS REAR WASHER TBOX	14
89	942480300	MTG ANGLE WELD'T LH - DCV COV.	2
90	942487300	MTG ANGLE WELD'T RH - DCV COV.	2
91	94320052	MUD FLAP 920-940 RUBBER	2
92	945770002	6AT2(6T90S-8MJ) HCL 48	2
93	945770003	6AT2(6T90L-8MJ) 24 HYD	4
94	946210500	TUBE, FRONT MTG WELD'T	1
95	946770003	HOSE ASSEMBLY - 8MJ-8MJ X 45	4
96	946770006	HOSE ASSEMBLY - 62	2
97	946770007	HOSE ASSEMBLY - 79	2
98	946770009	HOSE ASSEMBLY - 104	2
99	948570000	5x5 LIFT BAR ASSEMBLY 948 XHD	1
100	HA293	FITTING-ADPTR SWV RUN	1

09008490, BUA V70 2-WINCH REAR OUTRIGGER (cont'd)

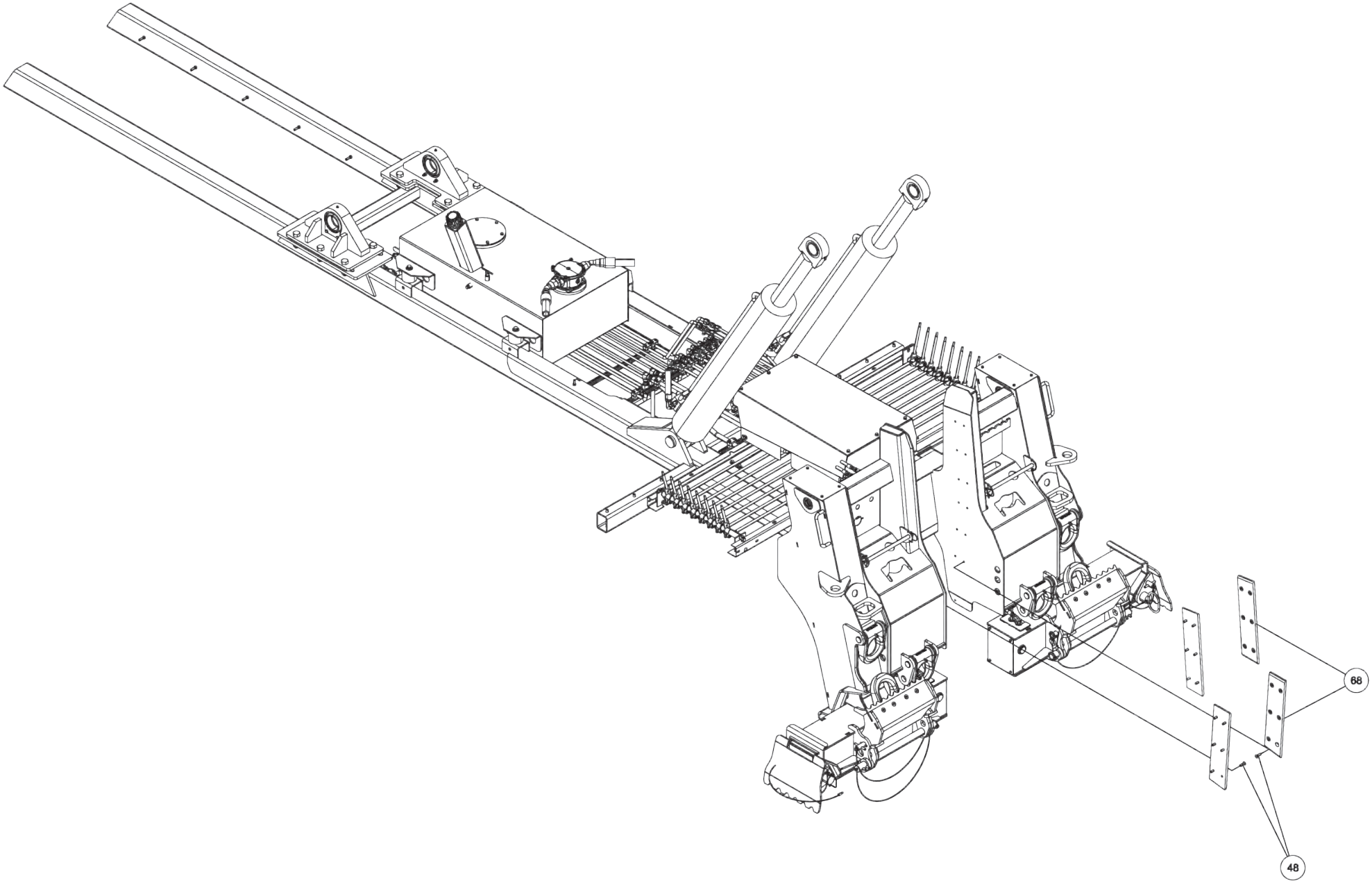

09008490, BUA V70 2-WINCH REAR OUTRIGGER (cont'd)

ITEM	PART NUMBER	DESCRIPTION	QTY
--	09008490	BUA V70 2W REAR OUTRIGGER	
1	0300044	FITT, HYD CONN. 6MJ-8MB	4
2	0300341	KNOB, BLACK (BLANK)	12
3	0300364	CLAMP-HOSE,0.875"-2.75" 50"LBS	8
4	0301470	FITTING, 90ELB 6MJ-8MB90	4
5	0301473	HOSE HYD, 18" LG	4
6	0301620	FITTING, HYD. 6MJ - 6MB90	5
7	0301696	FITTING, ELB 90 DEG 6MJ-6FJX90	5
8	0301895	GREASE FITTING, 1/8 STR PTF	2
9	0301909	RECEPTACLE BOOT	1
10	0301946	FITTING, BLKHD CONNECT	3
11	0301947	FITTING, 45 DEG ADAPTER	1
12	0301948	HD 7 WAY TRAILER CONNECT	1
13	0301959	SNAP RING-INTERNAL 1-1/2	4
14	0301998	HOSE HYD, 24" LG	4
15	0302205	GAUGE, FLUSH MNTG-6000 PSI	4
16	0302534	FITTING, 45 DEG ELBOW	2
17	0302698	FITTING, HOSE BARB,1-1/4	2
18	0302901	HOSE HYD, 120" 12C12	2
19	0303017	FITTING, CONNECTOR	4
20	0303170	HOSE, HYD. 75"	1
21	0303185	HOSE HYD, 66" LG.	1
22	0303538	FITT, ADAPTER -BRASS 8FP-6MP	1
23	0303539	QUICK DISCONNECT 3/8 FPT	1
24	0303948	ELBOW, 12MJ-16MB90	2
25	0304363	QUICK DISCONNECT 1/2 FPT	2
26	0306539	HOSE BARB 20HOSE16MB90	2
27	0306983	FITT-MALE RUNTEE 1/4T-1/4NPT	1
28	0307216	LIGHT, AMBER LED RECT 5.25x3.3	2
29	0307525	HOSE, HYD ASSY 120" LGTH 90L	4
30	0307538	LIGHT, MRKR-RED LED 4.5 X 1.63	4
31	0307604	KNOB, RED LONG - SK0700-07	4
32	0307778	PLUG, FILLER	2
33	0310010	SUCTION HOSE,1-1/4ID x50 100R4	1
34	0310881	6 WAY DIVERTER VALVE-12V	2
35	0310944	LH 200 CB TDM ALM BDY '10 VULC	1
36	0310945	RH 200 CB TDM ALM BDY '10 VULC	1
37	0311355	HOBBS HOURMETER	1
38	0311502	LIGHT 6"OVAL CLEAR-AMBER LED	6
39	0311503	GROMMET, LIGHT 6" OVAL	6
40	0311508	LED RECT RED STOP-CLEAR-12/24V	4
41	0311510	LIGHT RECT 12V REVERSE REFLEX	2
42	0311511	GROMMET, TAIL LIGHT, RECTANGULAR	8
43	0311755	WATER SEPARATOR-MONNIER	1
44	0312622	FITTING, 16FJ-6MJ	1
45	04000381	SS BHSCS 1/4-20 X 1	16
46	0400070	SCREW, 1/4-20X1 HHC GR5	6
47	0400078	SCREW, 1/4-20X2 HHC GR5	4
48	0400128	SCREW, 3/8-16X1-1/4 FHS GR8 BO	24
49	0400367	NUT, 1/4-20 LOK	4
50	0400369	NUT, 1/4 SPR J	8

ITEM	PART NUMBER	DESCRIPTION	QTY
51	0400393	NUT, 3/8-16 JAM	16
52	0400451	WASHER, 1/4	6
53	0400454	WASHER, 1/4 SS	22
54	0400491	LKWASHER, 1/2	14
55	0400498	WASHER, 1/2X2X0.125	14
56	0400687	SCREW, 10-24X3/4 PRH SS	4
57	0400816	WASHER, M10 SS	4
58	0401054	SCREW, 8-32X3/4 PRH SS	12
59	0402002	NUT, 8-32 LOK EXT SS	12
60	0402020	SCREW, 1/4-20X3/4 HHC SS	2
61	0402021	SCREW, 1/4-20X1 HHC SS	2
62	0402043	SCREW, 3/8-16X1-1/4 HHC SS	8
63	0402111	LKWASHER, 1/4 SS	18
64	0402113	NUT, 1/4-20 LOK SS	2
65	0402120	WASHER, 3/8 SS	16
66	0402121	LKWASHER, 3/8 SS	8
67	0402122	NUT, 3/8-16 HEX SS	8
68	0724476	PAD - NYLATRON - BBOM GUIDE	4
69	0724500	PIN - LOWER JACK LEG CYL	2
70	0726593	APNL-DCV LWR CTL PNL, 3 WINCH	2
71	0726594	APNL-DCV UPR LH CTL PNL,3WNCH	1
72	0726595	APNL-DCV UPR RH CTL PNL,3WNCH	1
73	0910787	STINGER ASSY - EURO - 144"	1
74	0911010	RECOVERY BOOM INSTALL V-70	1
75	0911120	LH REAR OUTRIGGER ASSY	1
76	0911121	RH REAR OUTRIGGER ASSY	1
77	0911804	AIR REGULATOR-GAUGE ASSEMBLY	2
78	0912015	SUBFRAME ASSY V70-100 STDWINCH	1
79	9010520	FITTING-ELBOW 1/4T-1/4NPT	2
80	9011053	FITTING, BRASS 1/4 TUBE-1/4 MP	1
81	9012594	FITT,HYD RUN TEE, 6MJx6MBx6MJ	1
82	9016815	MUNCIE PUMP TSPKS17-17-2BSSB	1
83	9024041	SWITCH, ROCKER SPST RED 12V21A	11
84	9041403	1/2 NC X 1 1/2 HHCS PL GR8	14
85	916770001	HOSE- HYD. 3/8 - 105" 8MJ-6MFA	2
86	920400005	MUD FLAP BRACE PLATE	2
87	9402970	TOOLBOX MTG. PAD	14
88	942480011	PLATE,SLOT-SS REAR WASHER TBOX	14
89	942480300	MTG ANGLE WELD'T LH - DCV COV.	2
90	942487300	MTG ANGLE WELD'T RH - DCV COV.	2
91	94320052	MUD FLAP 920-940 RUBBER	2
92	945770002	6AT2(6T90S-8MJ) HCL 48	2
93	945770003	6AT2(6T90L-8MJ) 24 HYD	4
94	946210500	TUBE, FRONT MTG WELD'T	1
95	946770003	HOSE ASSEMBLY - 8MJ-8MJ X 45	4
96	946770006	HOSE ASSEMBLY - 62	2
97	946770007	HOSE ASSEMBLY - 79	2
98	946770009	HOSE ASSEMBLY - 104	2
99	948570000	5x5 LIFT BAR ASSEMBLY 948 XHD	1
100	HA293	FITTING-ADPTR SWV RUN	1

09008490, BUA V70 2-WINCH REAR OUTRIGGER (cont'd)

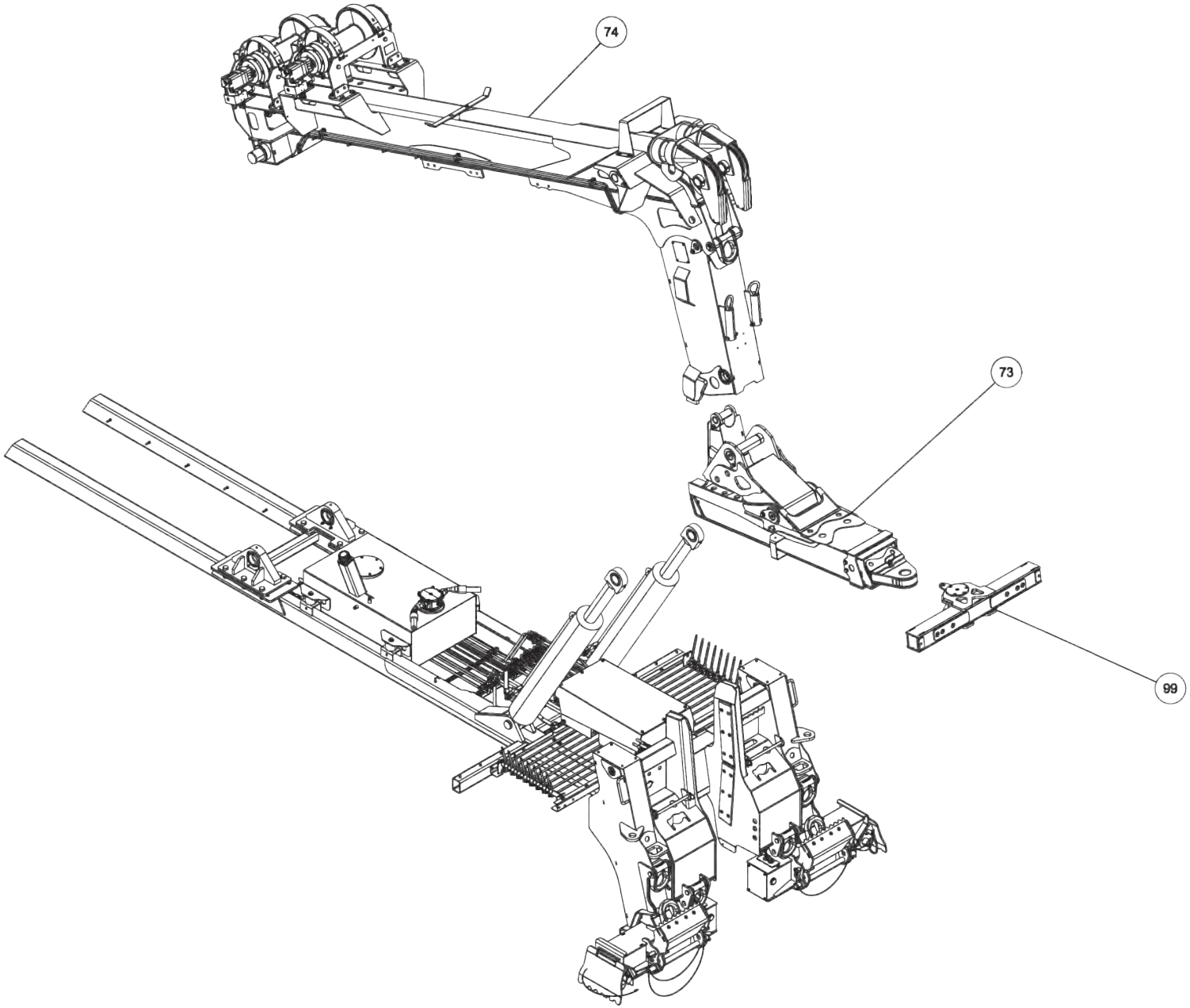

09008490, BUA V70 2-WINCH REAR OUTRIGGER (cont'd)

ITEM	PART NUMBER	DESCRIPTION	QTY
--	09008490	BUA V70 2W REAR OUTRIGGER	
1	0300044	FITT, HYD CONN. 6MJ-8MB	4
2	0300341	KNOB, BLACK (BLANK)	12
3	0300364	CLAMP-HOSE,0.875"-2.75" 50"LBS	8
4	0301470	FITTING, 90ELB 6MJ-8MB90	4
5	0301473	HOSE HYD, 18" LG	4
6	0301620	FITTING, HYD. 6MJ - 6MB90	5
7	0301696	FITTING, ELB 90 DEG 6MJ-6FJX90	5
8	0301895	GREASE FITTING, 1/8 STR PTF	2
9	0301909	RECEPTACLE BOOT	1
10	0301946	FITTING, BLKHD CONNECT	3
11	0301947	FITTING, 45 DEG ADAPTER	1
12	0301948	HD 7 WAY TRAILER CONNECT	1
13	0301959	SNAP RING-INTERNAL 1-1/2	4
14	0301998	HOSE HYD, 24" LG	4
15	0302205	GAUGE, FLUSH MNTG-6000 PSI	4
16	0302534	FITTING, 45 DEG ELBOW	2
17	0302698	FITTING, HOSE BARB,1-1/4	2
18	0302901	HOSE HYD, 120" 12C12	2
19	0303017	FITTING, CONNECTOR	4
20	0303170	HOSE, HYD. 75"	1
21	0303185	HOSE HYD, 66" LG.	1
22	0303538	FITT, ADAPTER -BRASS 8FP-6MP	1
23	0303539	QUICK DISCONNECT 3/8 FPT	1
24	0303948	ELBOW, 12MJ-16MB90	2
25	0304363	QUICK DISCONNECT 1/2 FPT	2
26	0306539	HOSE BARB 20HOSE16MB90	2
27	0306983	FITT-MALE RUNTEE 1/4T-1/4NPT	1
28	0307216	LIGHT, AMBER LED RECT 5.25x3.3	2
29	0307525	HOSE, HYD ASSY 120" LGTH 90L	4
30	0307538	LIGHT, MRKR-RED LED 4.5 X 1.63	4
31	0307604	KNOB, RED LONG - SK0700-07	4
32	0307778	PLUG, FILLER	2
33	0310010	SUCTION HOSE,1-1/4ID x50 100R4	1
34	0310881	6 WAY DIVERTER VALVE-12V	2
35	0310944	LH 200 CB TDM ALM BDY '10 VULC	1
36	0310945	RH 200 CB TDM ALM BDY '10 VULC	1
37	0311355	HOBBS HOURMETER	1
38	0311502	LIGHT 6"OVAL CLEAR-AMBER LED	6
39	0311503	GROMMET, LIGHT 6" OVAL	6
40	0311508	LED RECT RED STOP-CLEAR-12/24V	4
41	0311510	LIGHT RECT 12V REVERSE REFLEX	2
42	0311511	GROMMET, TAIL LIGHT, RECTANGULAR	8
43	0311755	WATER SEPARATOR-MONNIER	1
44	0312622	FITTING, 16FJ-6MJ	1
45	04000381	SS BHSCS 1/4-20 X 1	16
46	0400070	SCREW, 1/4-20X1 HHC GR5	6
47	0400078	SCREW, 1/4-20X2 HHC GR5	4
48	0400128	SCREW, 3/8-16X1-1/4 FHS GR8 BO	24
49	0400367	NUT, 1/4-20 LOK	4
50	0400369	NUT, 1/4 SPR J	8

ITEM	PART NUMBER	DESCRIPTION	QTY
51	0400393	NUT, 3/8-16 JAM	16
52	0400451	WASHER, 1/4	6
53	0400454	WASHER, 1/4 SS	22
54	0400491	LKWASHER, 1/2	14
55	0400498	WASHER, 1/2X2X0.125	14
56	0400687	SCREW, 10-24X3/4 PRH SS	4
57	0400816	WASHER, M10 SS	4
58	0401054	SCREW, 8-32X3/4 PRH SS	12
59	0402002	NUT, 8-32 LOK EXT SS	12
60	0402020	SCREW, 1/4-20X3/4 HHC SS	2
61	0402021	SCREW, 1/4-20X1 HHC SS	2
62	0402043	SCREW, 3/8-16X1-1/4 HHC SS	8
63	0402111	LKWASHER, 1/4 SS	18
64	0402113	NUT, 1/4-20 LOK SS	2
65	0402120	WASHER, 3/8 SS	16
66	0402121	LKWASHER, 3/8 SS	8
67	0402122	NUT, 3/8-16 HEX SS	8
68	0724476	PAD - NYLATRON - BBOM GUIDE	4
69	0724500	PIN - LOWER JACK LEG CYL	2
70	0726593	APNL-DCV LWR CTL PNL, 3 WINCH	2
71	0726594	APNL-DCV UPR LH CTL PNL,3WNCH	1
72	0726595	APNL-DCV UPR RH CTL PNL,3WNCH	1
73	0910787	STINGER ASSY - EURO - 144"	1
74	0911010	RECOVERY BOOM INSTALL V-70	1
75	0911120	LH REAR OUTRIGGER ASSY	1
76	0911121	RH REAR OUTRIGGER ASSY	1
77	0911804	AIR REGULATOR-GAUGE ASSEMBLY	2
78	0912015	SUBFRAME ASSY V70-100 STDWINCH	1
79	9010520	FITTING-ELBOW 1/4T-1/4NPT	2
80	9011053	FITTING, BRASS 1/4 TUBE-1/4 MP	1
81	9012594	FITT,HYD RUN TEE, 6MJx6MBx6MJ	1
82	9016815	MUNCIE PUMP TSPKS17-17-2BSSB	1
83	9024041	SWITCH, ROCKER SPST RED 12V21A	11
84	9041403	1/2 NC X 1 1/2 HHCS PL GR8	14
85	916770001	HOSE- HYD. 3/8 - 105" 8MJ-6MFA	2
86	920400005	MUD FLAP BRACE PLATE	2
87	9402970	TOOLBOX MTG. PAD	14
88	942480011	PLATE,SLOT-SS REAR WASHER TBOX	14
89	942480300	MTG ANGLE WELD'T LH - DCV COV.	2
90	942487300	MTG ANGLE WELD'T RH - DCV COV.	2
91	94320052	MUD FLAP 920-940 RUBBER	2
92	945770002	6AT2(6T90S-8MJ) HCL 48	2
93	945770003	6AT2(6T90L-8MJ) 24 HYD	4
94	946210500	TUBE, FRONT MTG WELD'T	1
95	946770003	HOSE ASSEMBLY - 8MJ-8MJ X 45	4
96	946770006	HOSE ASSEMBLY - 62	2
97	946770007	HOSE ASSEMBLY - 79	2
98	946770009	HOSE ASSEMBLY - 104	2
99	948570000	5x5 LIFT BAR ASSEMBLY 948 XHD	1
100	HA293	FITTING-ADPTR SWV RUN	1

09008490, BUA V70 2-WINCH REAR OUTRIGGER (cont'd)

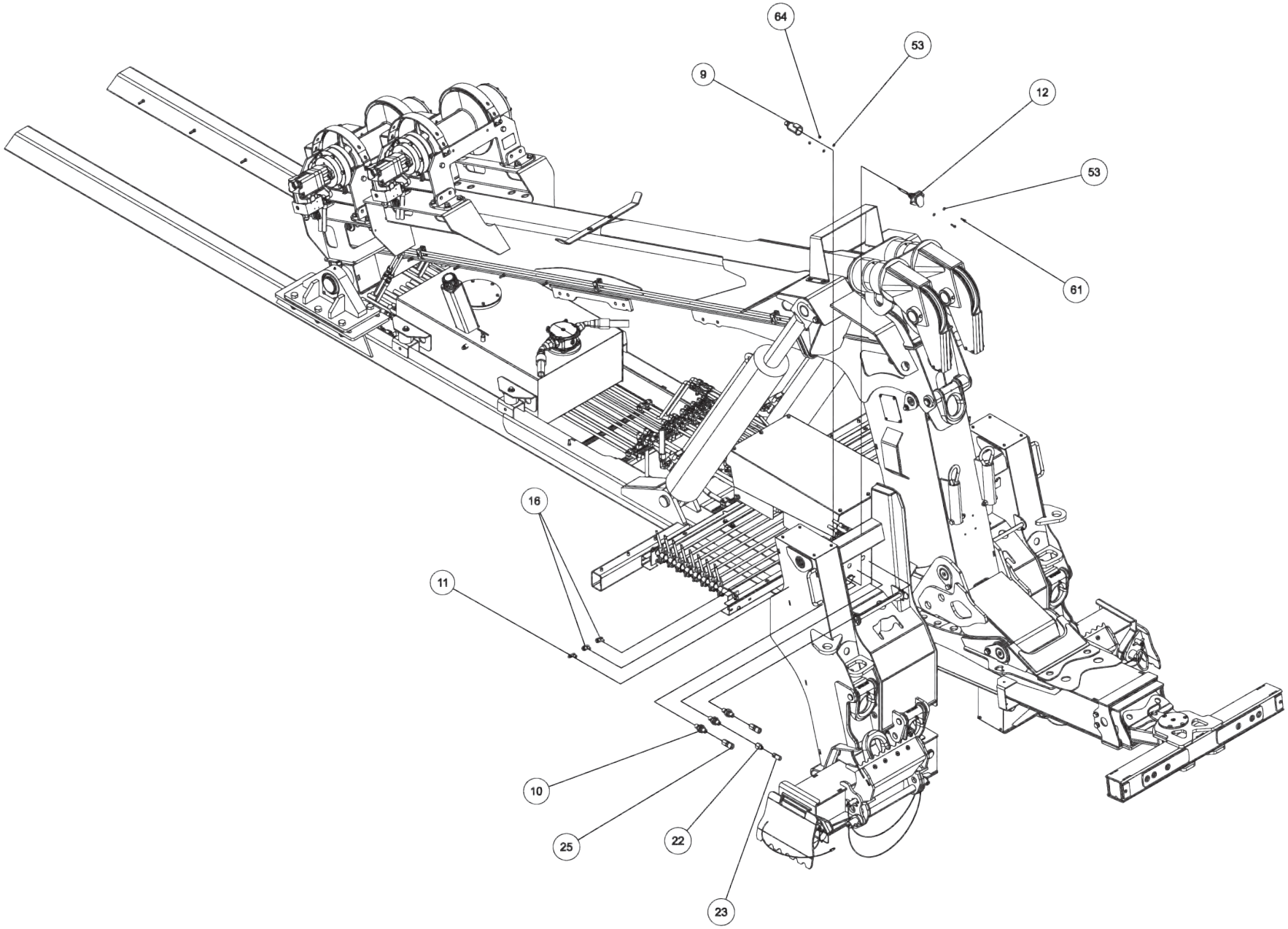

09008490, BUA V70 2-WINCH REAR OUTRIGGER (cont'd)

ITEM	PART NUMBER	DESCRIPTION	QTY
--	09008490	BUA V70 2W REAR OUTRIGGER	
1	0300044	FITT, HYD CONN. 6MJ-8MB	4
2	0300341	KNOB, BLACK (BLANK)	12
3	0300364	CLAMP-HOSE,0.875"-2.75" 50"LBS	8
4	0301470	FITTING, 90ELB 6MJ-8MB90	4
5	0301473	HOSE HYD, 18" LG	4
6	0301620	FITTING, HYD. 6MJ - 6MB90	5
7	0301696	FITTING, ELB 90 DEG 6MJ-6FJX90	5
8	0301895	GREASE FITTING, 1/8 STR PTF	2
9	0301909	RECEPTACLE BOOT	1
10	0301946	FITTING, BLKHD CONNECT	3
11	0301947	FITTING, 45 DEG ADAPTER	1
12	0301948	HD 7 WAY TRAILER CONNECT	1
13	0301959	SNAP RING-INTERNAL 1-1/2	4
14	0301998	HOSE HYD, 24" LG	4
15	0302205	GAUGE, FLUSH MNTG-6000 PSI	4
16	0302534	FITTING, 45 DEG ELBOW	2
17	0302698	FITTING, HOSE BARB,1-1/4	2
18	0302901	HOSE HYD, 120" 12C12	2
19	0303017	FITTING, CONNECTOR	4
20	0303170	HOSE, HYD. 75"	1
21	0303185	HOSE HYD, 66" LG.	1
22	0303538	FITT, ADAPTER -BRASS 8FP-6MP	1
23	0303539	QUICK DISCONNECT 3/8 FPT	1
24	0303948	ELBOW, 12MJ-16MB90	2
25	0304363	QUICK DISCONNECT 1/2 FPT	2
26	0306539	HOSE BARB 20HOSE16MB90	2
27	0306983	FITT-MALE RUNTEE 1/4T-1/4NPT	1
28	0307216	LIGHT, AMBER LED RECT 5.25x3.3	2
29	0307525	HOSE, HYD ASSY 120" LGTH 90L	4
30	0307538	LIGHT, MRKR-RED LED 4.5 X 1.63	4
31	0307604	KNOB, RED LONG - SK0700-07	4
32	0307778	PLUG, FILLER	2
33	0310010	SUCTION HOSE,1-1/4ID x50 100R4	1
34	0310881	6 WAY DIVERTER VALVE-12V	2
35	0310944	LH 200 CB TDM ALM BDY '10 VULC	1
36	0310945	RH 200 CB TDM ALM BDY '10 VULC	1
37	0311355	HOBBS HOURMETER	1
38	0311502	LIGHT 6"OVAL CLEAR-AMBER LED	6
39	0311503	GROMMET, LIGHT 6" OVAL	6
40	0311508	LED RECT RED STOP-CLEAR-12/24V	4
41	0311510	LIGHT RECT 12V REVERSE REFLEX	2
42	0311511	GROMMET, TAIL LIGHT, RECTANGULAR	8
43	0311755	WATER SEPARATOR-MONNIER	1
44	0312622	FITTING, 16FJ-6MJ	1
45	04000381	SS BHSCS 1/4-20 X 1	16
46	0400070	SCREW, 1/4-20X1 HHC GR5	6
47	0400078	SCREW, 1/4-20X2 HHC GR5	4
48	0400128	SCREW, 3/8-16X1-1/4 FHS GR8 BO	24
49	0400367	NUT, 1/4-20 LOK	4
50	0400369	NUT, 1/4 SPR J	8

ITEM	PART NUMBER	DESCRIPTION	QTY
51	0400393	NUT, 3/8-16 JAM	16
52	0400451	WASHER, 1/4	6
53	0400454	WASHER, 1/4 SS	22
54	0400491	LKWASHER, 1/2	14
55	0400498	WASHER, 1/2X2X0.125	14
56	0400687	SCREW, 10-24X3/4 PRH SS	4
57	0400816	WASHER, M10 SS	4
58	0401054	SCREW, 8-32X3/4 PRH SS	12
59	0402002	NUT, 8-32 LOK EXT SS	12
60	0402020	SCREW, 1/4-20X3/4 HHC SS	2
61	0402021	SCREW, 1/4-20X1 HHC SS	2
62	0402043	SCREW, 3/8-16X1-1/4 HHC SS	8
63	0402111	LKWASHER, 1/4 SS	18
64	0402113	NUT, 1/4-20 LOK SS	2
65	0402120	WASHER, 3/8 SS	16
66	0402121	LKWASHER, 3/8 SS	8
67	0402122	NUT, 3/8-16 HEX SS	8
68	0724476	PAD - NYLATRON - BBOM GUIDE	4
69	0724500	PIN - LOWER JACK LEG CYL	2
70	0726593	APNL-DCV LWR CTL PNL, 3 WINCH	2
71	0726594	APNL-DCV UPR LH CTL PNL,3WNCH	1
72	0726595	APNL-DCV UPR RH CTL PNL,3WNCH	1
73	0910787	STINGER ASSY - EURO - 144"	1
74	0911010	RECOVERY BOOM INSTALL V-70	1
75	0911120	LH REAR OUTRIGGER ASSY	1
76	0911121	RH REAR OUTRIGGER ASSY	1
77	0911804	AIR REGULATOR-GAUGE ASSEMBLY	2
78	0912015	SUBFRAME ASSY V70-100 STDWINCH	1
79	9010520	FITTING-ELBOW 1/4T-1/4NPT	2
80	9011053	FITTING, BRASS 1/4 TUBE-1/4 MP	1
81	9012594	FITT,HYD RUN TEE, 6MJx6MBx6MJ	1
82	9016815	MUNCIE PUMP TSPKS17-17-2BSSB	1
83	9024041	SWITCH, ROCKER SPST RED 12V21A	11
84	9041403	1/2 NC X 1 1/2 HHCS PL GR8	14
85	916770001	HOSE- HYD. 3/8 - 105" 8MJ-6MFA	2
86	920400005	MUD FLAP BRACE PLATE	2
87	9402970	TOOLBOX MTG. PAD	14
88	942480011	PLATE,SLOT-SS REAR WASHER TBOX	14
89	942480300	MTG ANGLE WELD'T LH - DCV COV.	2
90	942487300	MTG ANGLE WELD'T RH - DCV COV.	2
91	94320052	MUD FLAP 920-940 RUBBER	2
92	945770002	6AT2(6T90S-8MJ) HCL 48	2
93	945770003	6AT2(6T90L-8MJ) 24 HYD	4
94	946210500	TUBE, FRONT MTG WELD'T	1
95	946770003	HOSE ASSEMBLY - 8MJ-8MJ X 45	4
96	946770006	HOSE ASSEMBLY - 62	2
97	946770007	HOSE ASSEMBLY - 79	2
98	946770009	HOSE ASSEMBLY - 104	2
99	948570000	5x5 LIFT BAR ASSEMBLY 948 XHD	1
100	HA293	FITTING-ADPTR SWV RUN	1

09008490, BUA V70 2-WINCH REAR OUTRIGGER (cont'd)

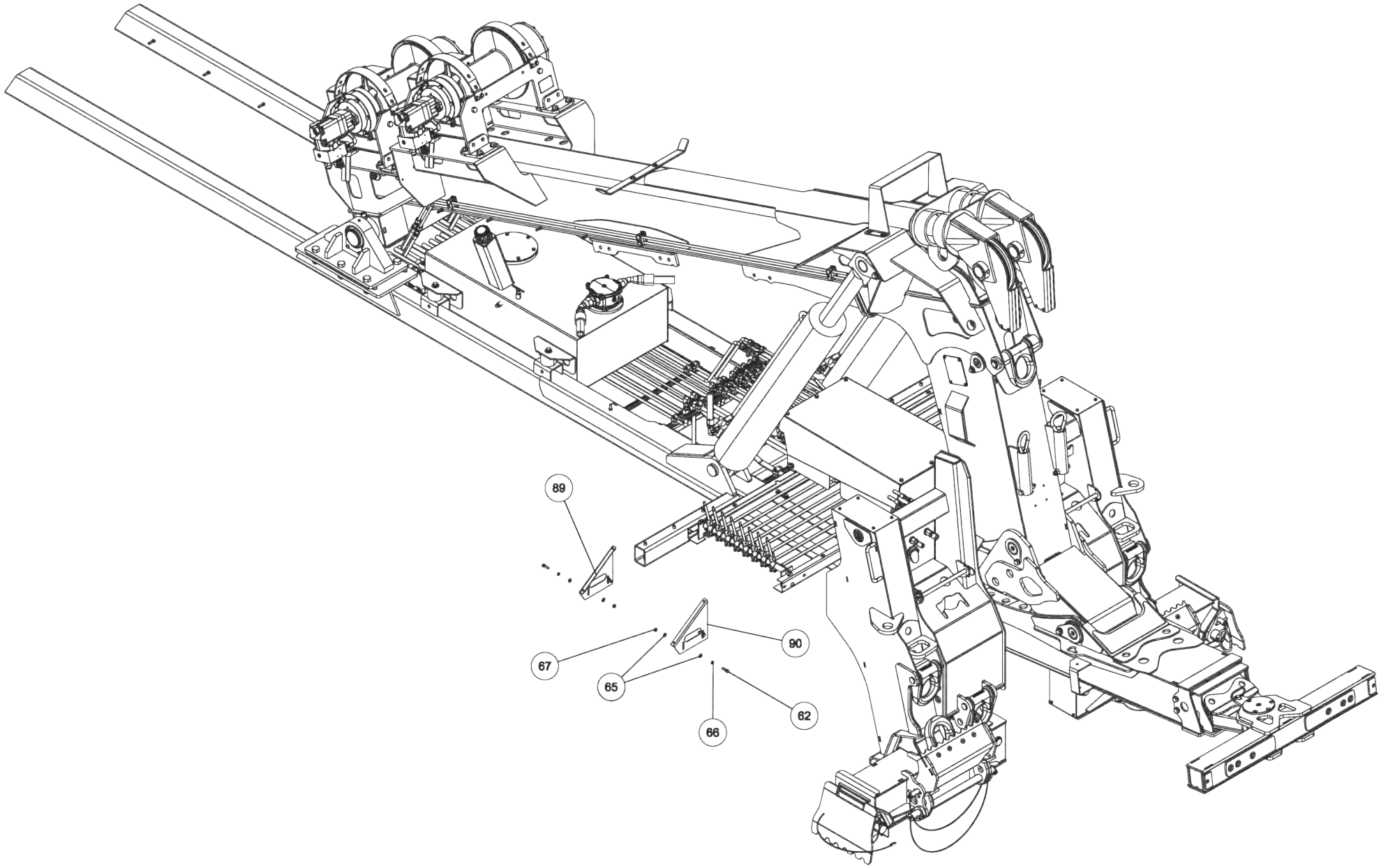

09008490, BUA V70 2-WINCH REAR OUTRIGGER (cont'd)

ITEM	PART NUMBER	DESCRIPTION	QTY
--	09008490	BUA V70 2W REAR OUTRIGGER	
1	0300044	FITT, HYD CONN. 6MJ-8MB	4
2	0300341	KNOB, BLACK (BLANK)	12
3	0300364	CLAMP-HOSE,0.875"-2.75" 50"LBS	8
4	0301470	FITTING, 90ELB 6MJ-8MB90	4
5	0301473	HOSE HYD, 18" LG	4
6	0301620	FITTING, HYD. 6MJ - 6MB90	5
7	0301696	FITTING, ELB 90 DEG 6MJ-6FJX90	5
8	0301895	GREASE FITTING, 1/8 STR PTF	2
9	0301909	RECEPTACLE BOOT	1
10	0301946	FITTING, BLKHD CONNECT	3
11	0301947	FITTING, 45 DEG ADAPTER	1
12	0301948	HD 7 WAY TRAILER CONNECT	1
13	0301959	SNAP RING-INTERNAL 1-1/2	4
14	0301998	HOSE HYD, 24" LG	4
15	0302205	GAUGE, FLUSH MNTG-6000 PSI	4
16	0302534	FITTING, 45 DEG ELBOW	2
17	0302698	FITTING, HOSE BARB,1-1/4	2
18	0302901	HOSE HYD, 120" 12C12	2
19	0303017	FITTING, CONNECTOR	4
20	0303170	HOSE, HYD. 75"	1
21	0303185	HOSE HYD, 66" LG.	1
22	0303538	FITT, ADAPTER -BRASS 8FP-6MP	1
23	0303539	QUICK DISCONNECT 3/8 FPT	1
24	0303948	ELBOW, 12MJ-16MB90	2
25	0304363	QUICK DISCONNECT 1/2 FPT	2
26	0306539	HOSE BARB 20HOSE16MB90	2
27	0306983	FITT-MALE RUNTEE 1/4T-1/4NPT	1
28	0307216	LIGHT, AMBER LED RECT 5.25x3.3	2
29	0307525	HOSE, HYD ASSY 120" LGTH 90L	4
30	0307538	LIGHT, MRKR-RED LED 4.5 X 1.63	4
31	0307604	KNOB, RED LONG - SK0700-07	4
32	0307778	PLUG, FILLER	2
33	0310010	SUCTION HOSE,1-1/4ID x50 100R4	1
34	0310881	6 WAY DIVERTER VALVE-12V	2
35	0310944	LH 200 CB TDM ALM BDY '10 VULC	1
36	0310945	RH 200 CB TDM ALM BDY '10 VULC	1
37	0311355	HOBBS HOURMETER	1
38	0311502	LIGHT 6"OVAL CLEAR-AMBER LED	6
39	0311503	GROMMET, LIGHT 6" OVAL	6
40	0311508	LED RECT RED STOP-CLEAR-12/24V	4
41	0311510	LIGHT RECT 12V REVERSE REFLEX	2
42	0311511	GROMMET, TAIL LIGHT, RECTANGULAR	8
43	0311755	WATER SEPARATOR-MONNIER	1
44	0312622	FITTING, 16FJ-6MJ	1
45	04000381	SS BHSCS 1/4-20 X 1	16
46	0400070	SCREW, 1/4-20X1 HHC GR5	6
47	0400078	SCREW, 1/4-20X2 HHC GR5	4
48	0400128	SCREW, 3/8-16X1-1/4 FHS GR8 BO	24
49	0400367	NUT, 1/4-20 LOK	4
50	0400369	NUT, 1/4 SPR J	8

ITEM	PART NUMBER	DESCRIPTION	QTY
51	0400393	NUT, 3/8-16 JAM	16
52	0400451	WASHER, 1/4	6
53	0400454	WASHER, 1/4 SS	22
54	0400491	LKWASHER, 1/2	14
55	0400498	WASHER, 1/2X2X0.125	14
56	0400687	SCREW, 10-24X3/4 PRH SS	4
57	0400816	WASHER, M10 SS	4
58	0401054	SCREW, 8-32X3/4 PRH SS	12
59	0402002	NUT, 8-32 LOK EXT SS	12
60	0402020	SCREW, 1/4-20X3/4 HHC SS	2
61	0402021	SCREW, 1/4-20X1 HHC SS	2
62	0402043	SCREW, 3/8-16X1-1/4 HHC SS	8
63	0402111	LKWASHER, 1/4 SS	18
64	0402113	NUT, 1/4-20 LOK SS	2
65	0402120	WASHER, 3/8 SS	16
66	0402121	LKWASHER, 3/8 SS	8
67	0402122	NUT, 3/8-16 HEX SS	8
68	0724476	PAD - NYLATRON - BBOM GUIDE	4
69	0724500	PIN - LOWER JACK LEG CYL	2
70	0726593	APNL-DCV LWR CTL PNL, 3 WINCH	2
71	0726594	APNL-DCV UPR LH CTL PNL,3WNCH	1
72	0726595	APNL-DCV UPR RH CTL PNL,3WNCH	1
73	0910787	STINGER ASSY - EURO - 144"	1
74	0911010	RECOVERY BOOM INSTALL V-70	1
75	0911120	LH REAR OUTRIGGER ASSY	1
76	0911121	RH REAR OUTRIGGER ASSY	1
77	0911804	AIR REGULATOR-GAUGE ASSEMBLY	2
78	0912015	SUBFRAME ASSY V70-100 STDWINCH	1
79	9010520	FITTING-ELBOW 1/4T-1/4NPT	2
80	9011053	FITTING, BRASS 1/4 TUBE-1/4 MP	1
81	9012594	FITT,HYD RUN TEE, 6MJx6MBx6MJ	1
82	9016815	MUNCIE PUMP TSPKS17-17-2BSSB	1
83	9024041	SWITCH, ROCKER SPST RED 12V21A	11
84	9041403	1/2 NC X 1 1/2 HHCS PL GR8	14
85	916770001	HOSE- HYD. 3/8 - 105" 8MJ-6MFA	2
86	920400005	MUD FLAP BRACE PLATE	2
87	9402970	TOOLBOX MTG. PAD	14
88	942480011	PLATE,SLOT-SS REAR WASHER TBOX	14
89	942480300	MTG ANGLE WELD'T LH - DCV COV.	2
90	942487300	MTG ANGLE WELD'T RH - DCV COV.	2
91	94320052	MUD FLAP 920-940 RUBBER	2
92	945770002	6AT2(6T90S-8MJ) HCL 48	2
93	945770003	6AT2(6T90L-8MJ) 24 HYD	4
94	946210500	TUBE, FRONT MTG WELD'T	1
95	946770003	HOSE ASSEMBLY - 8MJ-8MJ X 45	4
96	946770006	HOSE ASSEMBLY - 62	2
97	946770007	HOSE ASSEMBLY - 79	2
98	946770009	HOSE ASSEMBLY - 104	2
99	948570000	5x5 LIFT BAR ASSEMBLY 948 XHD	1
100	HA293	FITTING-ADPTR SWV RUN	1

09008490, BUA V70 2-WINCH REAR OUTRIGGER (cont'd)

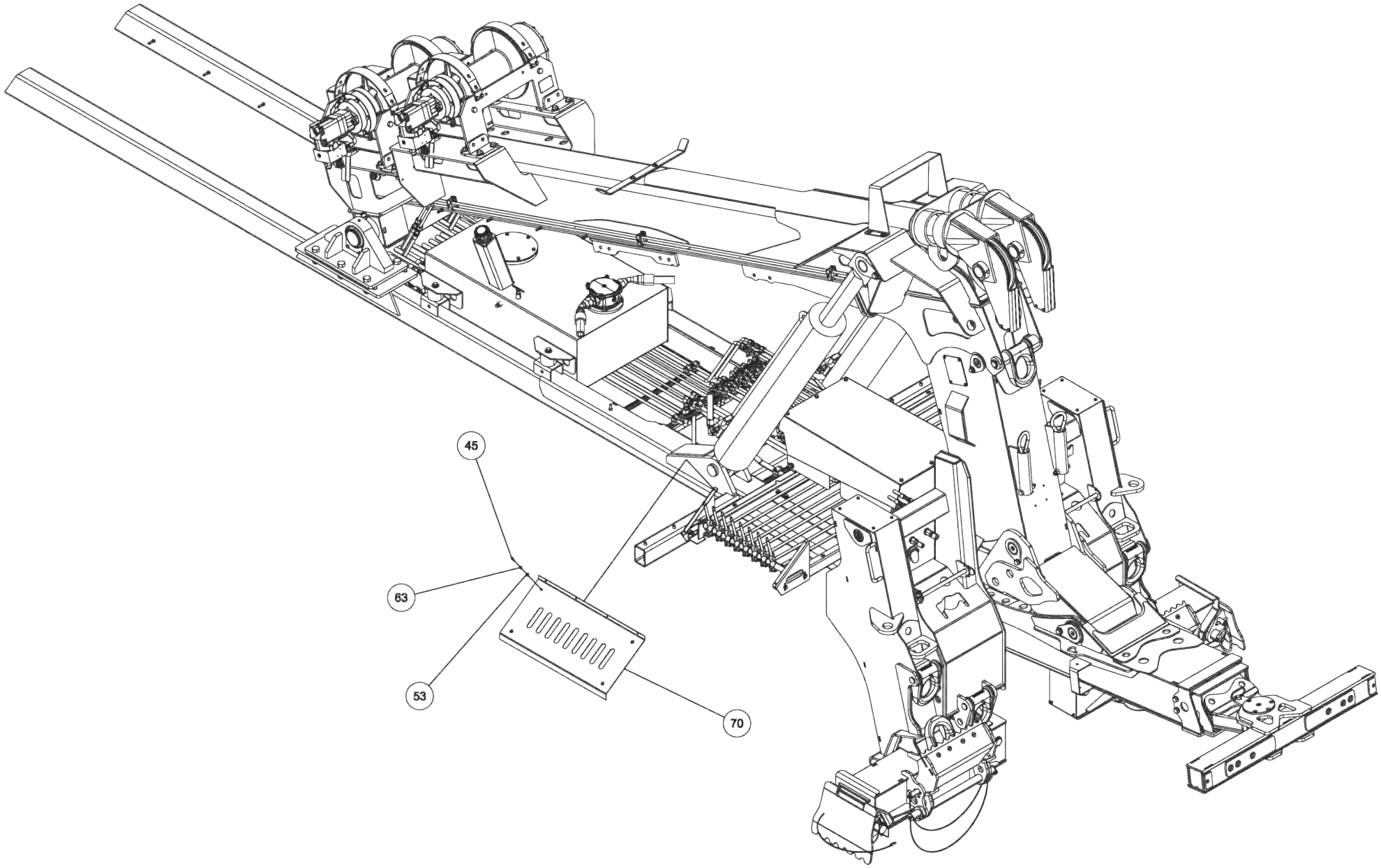

09008490, BUA V70 2-WINCH REAR OUTRIGGER (cont'd)

ITEM	PART NUMBER	DESCRIPTION	QTY
--	09008490	BUA V70 2W REAR OUTRIGGER	
1	0300044	FITT, HYD CONN. 6MJ-8MB	4
2	0300341	KNOB, BLACK (BLANK)	12
3	0300364	CLAMP-HOSE,0.875"-2.75" 50"LBS	8
4	0301470	FITTING, 90ELB 6MJ-8MB90	4
5	0301473	HOSE HYD, 18" LG	4
6	0301620	FITTING, HYD. 6MJ - 6MB90	5
7	0301696	FITTING, ELB 90 DEG 6MJ-6FJX90	5
8	0301895	GREASE FITTING, 1/8 STR PTF	2
9	0301909	RECEPTACLE BOOT	1
10	0301946	FITTING, BLKHD CONNECT	3
11	0301947	FITTING, 45 DEG ADAPTER	1
12	0301948	HD 7 WAY TRAILER CONNECT	1
13	0301959	SNAP RING-INTERNAL 1-1/2	4
14	0301998	HOSE HYD, 24" LG	4
15	0302205	GAUGE, FLUSH MNTG-6000 PSI	4
16	0302534	FITTING, 45 DEG ELBOW	2
17	0302698	FITTING, HOSE BARB,1-1/4	2
18	0302901	HOSE HYD, 120" 12C12	2
19	0303017	FITTING, CONNECTOR	4
20	0303170	HOSE, HYD. 75"	1
21	0303185	HOSE HYD, 66" LG.	1
22	0303538	FITT, ADAPTER -BRASS 8FP-6MP	1
23	0303539	QUICK DISCONNECT 3/8 FPT	1
24	0303948	ELBOW, 12MJ-16MB90	2
25	0304363	QUICK DISCONNECT 1/2 FPT	2
26	0306539	HOSE BARB 20HOSE16MB90	2
27	0306983	FITT-MALE RUNTEE 1/4T-1/4NPT	1
28	0307216	LIGHT, AMBER LED RECT 5.25x3.3	2
29	0307525	HOSE, HYD ASSY 120" LGTH 90L	4
30	0307538	LIGHT, MRKR-RED LED 4.5 X 1.63	4
31	0307604	KNOB, RED LONG - SK0700-07	4
32	0307778	PLUG, FILLER	2
33	0310010	SUCTION HOSE,1-1/4ID x50 100R4	1
34	0310881	6 WAY DIVERTER VALVE-12V	2
35	0310944	LH 200 CB TDM ALM BDY '10 VULC	1
36	0310945	RH 200 CB TDM ALM BDY '10 VULC	1
37	0311355	HOBBS HOURMETER	1
38	0311502	LIGHT 6"OVAL CLEAR-AMBER LED	6
39	0311503	GROMMET, LIGHT 6" OVAL	6
40	0311508	LED RECT RED STOP-CLEAR-12/24V	4
41	0311510	LIGHT RECT 12V REVERSE REFLEX	2
42	0311511	GROMMET, TAIL LIGHT, RECTANGULAR	8
43	0311755	WATER SEPARATOR-MONNIER	1
44	0312622	FITTING, 16FJ-6MJ	1
45	04000381	SS BHSCS 1/4-20 X 1	16
46	0400070	SCREW, 1/4-20X1 HHC GR5	6
47	0400078	SCREW, 1/4-20X2 HHC GR5	4
48	0400128	SCREW, 3/8-16X1-1/4 FHS GR8 BO	24
49	0400367	NUT, 1/4-20 LOK	4
50	0400369	NUT, 1/4 SPR J	8

ITEM	PART NUMBER	DESCRIPTION	QTY
51	0400393	NUT, 3/8-16 JAM	16
52	0400451	WASHER, 1/4	6
53	0400454	WASHER, 1/4 SS	22
54	0400491	LKWASHER, 1/2	14
55	0400498	WASHER, 1/2X2X0.125	14
56	0400687	SCREW, 10-24X3/4 PRH SS	4
57	0400816	WASHER, M10 SS	4
58	0401054	SCREW, 8-32X3/4 PRH SS	12
59	0402002	NUT, 8-32 LOK EXT SS	12
60	0402020	SCREW, 1/4-20X3/4 HHC SS	2
61	0402021	SCREW, 1/4-20X1 HHC SS	2
62	0402043	SCREW, 3/8-16X1-1/4 HHC SS	8
63	0402111	LKWASHER, 1/4 SS	18
64	0402113	NUT, 1/4-20 LOK SS	2
65	0402120	WASHER, 3/8 SS	16
66	0402121	LKWASHER, 3/8 SS	8
67	0402122	NUT, 3/8-16 HEX SS	8
68	0724476	PAD - NYLATRON - BBOM GUIDE	4
69	0724500	PIN - LOWER JACK LEG CYL	2
70	0726593	APNL-DCV LWR CTL PNL, 3 WINCH	2
71	0726594	APNL-DCV UPR LH CTL PNL,3WNCH	1
72	0726595	APNL-DCV UPR RH CTL PNL,3WNCH	1
73	0910787	STINGER ASSY - EURO - 144"	1
74	0911010	RECOVERY BOOM INSTALL V-70	1
75	0911120	LH REAR OUTRIGGER ASSY	1
76	0911121	RH REAR OUTRIGGER ASSY	1
77	0911804	AIR REGULATOR-GAUGE ASSEMBLY	2
78	0912015	SUBFRAME ASSY V70-100 STDWINCH	1
79	9010520	FITTING-ELBOW 1/4T-1/4NPT	2
80	9011053	FITTING, BRASS 1/4 TUBE-1/4 MP	1
81	9012594	FITT,HYD RUN TEE, 6MJx6MBx6MJ	1
82	9016815	MUNCIE PUMP TSPKS17-17-2BSSB	1
83	9024041	SWITCH, ROCKER SPST RED 12V21A	11
84	9041403	1/2 NC X 1 1/2 HHCS PL GR8	14
85	916770001	HOSE- HYD. 3/8 - 105" 8MJ-6MFA	2
86	920400005	MUD FLAP BRACE PLATE	2
87	9402970	TOOLBOX MTG. PAD	14
88	942480011	PLATE,SLOT-SS REAR WASHER TBOX	14
89	942480300	MTG ANGLE WELD'T LH - DCV COV.	2
90	942487300	MTG ANGLE WELD'T RH - DCV COV.	2
91	94320052	MUD FLAP 920-940 RUBBER	2
92	945770002	6AT2(6T90S-8MJ) HCL 48	2
93	945770003	6AT2(6T90L-8MJ) 24 HYD	4
94	946210500	TUBE, FRONT MTG WELD'T	1
95	946770003	HOSE ASSEMBLY - 8MJ-8MJ X 45	4
96	946770006	HOSE ASSEMBLY - 62	2
97	946770007	HOSE ASSEMBLY - 79	2
98	946770009	HOSE ASSEMBLY - 104	2
99	948570000	5x5 LIFT BAR ASSEMBLY 948 XHD	1
100	HA293	FITTING-ADPTR SWV RUN	1

09008490, BUA V70 2-WINCH REAR OUTRIGGER (cont'd)

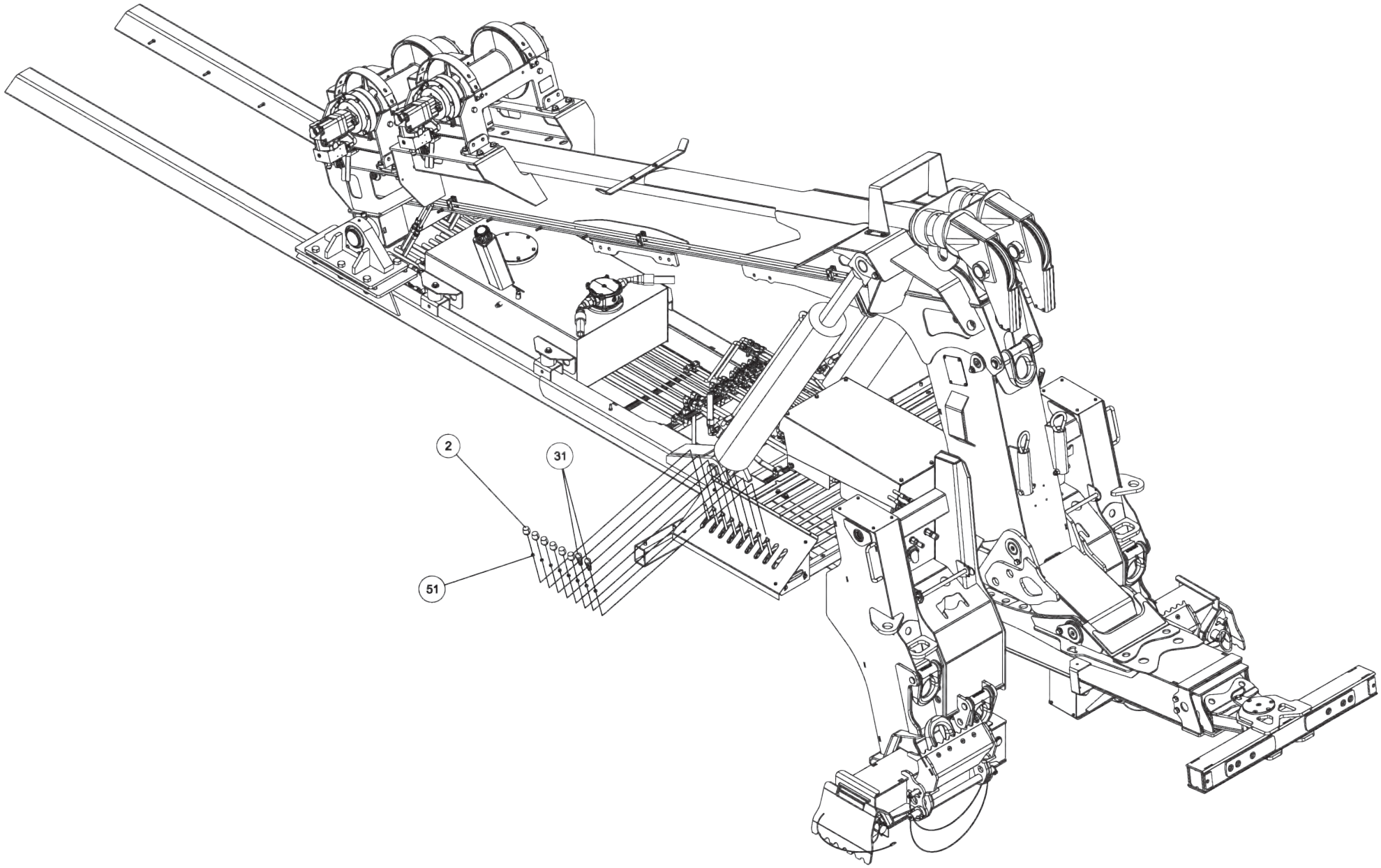

09008490, BUA V70 2-WINCH REAR OUTRIGGER (cont'd)

ITEM	PART NUMBER	DESCRIPTION	QTY
--	09008490	BUA V70 2W REAR OUTRIGGER	
1	0300044	FITT, HYD CONN. 6MJ-8MB	4
2	0300341	KNOB, BLACK (BLANK)	12
3	0300364	CLAMP-HOSE,0.875"-2.75" 50"LBS	8
4	0301470	FITTING, 90ELB 6MJ-8MB90	4
5	0301473	HOSE HYD, 18" LG	4
6	0301620	FITTING, HYD. 6MJ - 6MB90	5
7	0301696	FITTING, ELB 90 DEG 6MJ-6FJX90	5
8	0301895	GREASE FITTING, 1/8 STR PTF	2
9	0301909	RECEPTACLE BOOT	1
10	0301946	FITTING, BLKHD CONNECT	3
11	0301947	FITTING, 45 DEG ADAPTER	1
12	0301948	HD 7 WAY TRAILER CONNECT	1
13	0301959	SNAP RING-INTERNAL 1-1/2	4
14	0301998	HOSE HYD, 24" LG	4
15	0302205	GAUGE, FLUSH MNTG-6000 PSI	4
16	0302534	FITTING, 45 DEG ELBOW	2
17	0302698	FITTING, HOSE BARB,1-1/4	2
18	0302901	HOSE HYD, 120" 12C12	2
19	0303017	FITTING, CONNECTOR	4
20	0303170	HOSE, HYD. 75"	1
21	0303185	HOSE HYD, 66" LG.	1
22	0303538	FITT, ADAPTER -BRASS 8FP-6MP	1
23	0303539	QUICK DISCONNECT 3/8 FPT	1
24	0303948	ELBOW, 12MJ-16MB90	2
25	0304363	QUICK DISCONNECT 1/2 FPT	2
26	0306539	HOSE BARB 20HOSE16MB90	2
27	0306983	FITT-MALE RUNTEE 1/4T-1/4NPT	1
28	0307216	LIGHT, AMBER LED RECT 5.25x3.3	2
29	0307525	HOSE, HYD ASSY 120" LGTH 90L	4
30	0307538	LIGHT, MRKR-RED LED 4.5 X 1.63	4
31	0307604	KNOB, RED LONG - SK0700-07	4
32	0307778	PLUG, FILLER	2
33	0310010	SUCTION HOSE,1-1/4ID x50 100R4	1
34	0310881	6 WAY DIVERTER VALVE-12V	2
35	0310944	LH 200 CB TDM ALM BDY '10 VULC	1
36	0310945	RH 200 CB TDM ALM BDY '10 VULC	1
37	0311355	HOBBS HOURMETER	1
38	0311502	LIGHT 6"OVAL CLEAR-AMBER LED	6
39	0311503	GROMMET, LIGHT 6" OVAL	6
40	0311508	LED RECT RED STOP-CLEAR-12/24V	4
41	0311510	LIGHT RECT 12V REVERSE REFLEX	2
42	0311511	GROMMET, TAIL LIGHT, RECTANGULAR	8
43	0311755	WATER SEPARATOR-MONNIER	1
44	0312622	FITTING, 16FJ-6MJ	1
45	04000381	SS BHSCS 1/4-20 X 1	16
46	0400070	SCREW, 1/4-20X1 HHC GR5	6
47	0400078	SCREW, 1/4-20X2 HHC GR5	4
48	0400128	SCREW, 3/8-16X1-1/4 FHS GR8 BO	24
49	0400367	NUT, 1/4-20 LOK	4
50	0400369	NUT, 1/4 SPR J	8

ITEM	PART NUMBER	DESCRIPTION	QTY
51	0400393	NUT, 3/8-16 JAM	16
52	0400451	WASHER, 1/4	6
53	0400454	WASHER, 1/4 SS	22
54	0400491	LKWASHER, 1/2	14
55	0400498	WASHER, 1/2X2X0.125	14
56	0400687	SCREW, 10-24X3/4 PRH SS	4
57	0400816	WASHER, M10 SS	4
58	0401054	SCREW, 8-32X3/4 PRH SS	12
59	0402002	NUT, 8-32 LOK EXT SS	12
60	0402020	SCREW, 1/4-20X3/4 HHC SS	2
61	0402021	SCREW, 1/4-20X1 HHC SS	2
62	0402043	SCREW, 3/8-16X1-1/4 HHC SS	8
63	0402111	LKWASHER, 1/4 SS	18
64	0402113	NUT, 1/4-20 LOK SS	2
65	0402120	WASHER, 3/8 SS	16
66	0402121	LKWASHER, 3/8 SS	8
67	0402122	NUT, 3/8-16 HEX SS	8
68	0724476	PAD - NYLATRON - BBOM GUIDE	4
69	0724500	PIN - LOWER JACK LEG CYL	2
70	0726593	APNL-DCV LWR CTL PNL, 3 WINCH	2
71	0726594	APNL-DCV UPR LH CTL PNL,3WNCH	1
72	0726595	APNL-DCV UPR RH CTL PNL,3WNCH	1
73	0910787	STINGER ASSY - EURO - 144"	1
74	0911010	RECOVERY BOOM INSTALL V-70	1
75	0911120	LH REAR OUTRIGGER ASSY	1
76	0911121	RH REAR OUTRIGGER ASSY	1
77	0911804	AIR REGULATOR-GAUGE ASSEMBLY	2
78	0912015	SUBFRAME ASSY V70-100 STDWINCH	1
79	9010520	FITTING-ELBOW 1/4T-1/4NPT	2
80	9011053	FITTING, BRASS 1/4 TUBE-1/4 MP	1
81	9012594	FITT,HYD RUN TEE, 6MJx6MBx6MJ	1
82	9016815	MUNCIE PUMP TSPKS17-17-2BSSB	1
83	9024041	SWITCH, ROCKER SPST RED 12V21A	11
84	9041403	1/2 NC X 1 1/2 HHCS PL GR8	14
85	916770001	HOSE- HYD. 3/8 - 105" 8MJ-6MFA	2
86	920400005	MUD FLAP BRACE PLATE	2
87	9402970	TOOLBOX MTG. PAD	14
88	942480011	PLATE,SLOT-SS REAR WASHER TBOX	14
89	942480300	MTG ANGLE WELD'T LH - DCV COV.	2
90	942487300	MTG ANGLE WELD'T RH - DCV COV.	2
91	94320052	MUD FLAP 920-940 RUBBER	2
92	945770002	6AT2(6T90S-8MJ) HCL 48	2
93	945770003	6AT2(6T90L-8MJ) 24 HYD	4
94	946210500	TUBE, FRONT MTG WELD'T	1
95	946770003	HOSE ASSEMBLY - 8MJ-8MJ X 45	4
96	946770006	HOSE ASSEMBLY - 62	2
97	946770007	HOSE ASSEMBLY - 79	2
98	946770009	HOSE ASSEMBLY - 104	2
99	948570000	5x5 LIFT BAR ASSEMBLY 948 XHD	1
100	HA293	FITTING-ADPTR SWV RUN	1

09008490, BUA V70 2-WINCH REAR OUTRIGGER (cont'd)

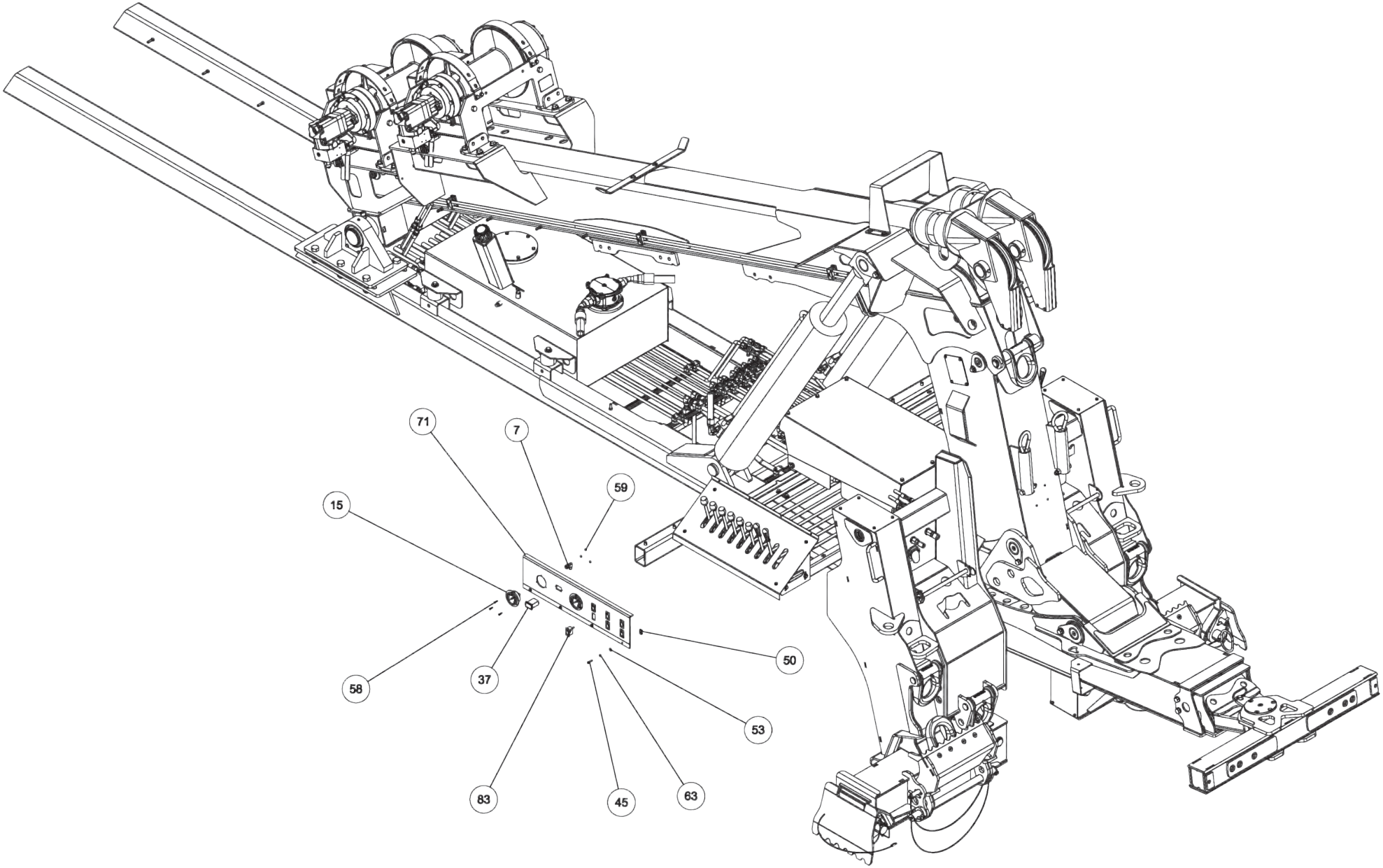

09008490, BUA V70 2-WINCH REAR OUTRIGGER (cont'd)

ITEM	PART NUMBER	DESCRIPTION	QTY
--	09008490	BUA V70 2W REAR OUTRIGGER	
1	0300044	FITT, HYD CONN. 6MJ-8MB	4
2	0300341	KNOB, BLACK (BLANK)	12
3	0300364	CLAMP-HOSE,0.875"-2.75" 50"LBS	8
4	0301470	FITTING, 90ELB 6MJ-8MB90	4
5	0301473	HOSE HYD, 18" LG	4
6	0301620	FITTING, HYD. 6MJ - 6MB90	5
7	0301696	FITTING, ELB 90 DEG 6MJ-6FJX90	5
8	0301895	GREASE FITTING, 1/8 STR PTF	2
9	0301909	RECEPTACLE BOOT	1
10	0301946	FITTING, BLKHD CONNECT	3
11	0301947	FITTING, 45 DEG ADAPTER	1
12	0301948	HD 7 WAY TRAILER CONNECT	1
13	0301959	SNAP RING-INTERNAL 1-1/2	4
14	0301998	HOSE HYD, 24" LG	4
15	0302205	GAUGE, FLUSH MNTG-6000 PSI	4
16	0302534	FITTING, 45 DEG ELBOW	2
17	0302698	FITTING, HOSE BARB,1-1/4	2
18	0302901	HOSE HYD, 120" 12C12	2
19	0303017	FITTING, CONNECTOR	4
20	0303170	HOSE, HYD. 75"	1
21	0303185	HOSE HYD, 66" LG.	1
22	0303538	FITT, ADAPTER -BRASS 8FP-6MP	1
23	0303539	QUICK DISCONNECT 3/8 FPT	1
24	0303948	ELBOW, 12MJ-16MB90	2
25	0304363	QUICK DISCONNECT 1/2 FPT	2
26	0306539	HOSE BARB 20HOSE16MB90	2
27	0306983	FITT-MALE RUNTEE 1/4T-1/4NPT	1
28	0307216	LIGHT, AMBER LED RECT 5.25x3.3	2
29	0307525	HOSE, HYD ASSY 120" LGTH 90L	4
30	0307538	LIGHT, MRKR-RED LED 4.5 X 1.63	4
31	0307604	KNOB, RED LONG - SK0700-07	4
32	0307778	PLUG, FILLER	2
33	0310010	SUCTION HOSE,1-1/4ID x50 100R4	1
34	0310881	6 WAY DIVERTER VALVE-12V	2
35	0310944	LH 200 CB TDM ALM BDY '10 VULC	1
36	0310945	RH 200 CB TDM ALM BDY '10 VULC	1
37	0311355	HOBBS HOURMETER	1
38	0311502	LIGHT 6"OVAL CLEAR-AMBER LED	6
39	0311503	GROMMET, LIGHT 6" OVAL	6
40	0311508	LED RECT RED STOP-CLEAR-12/24V	4
41	0311510	LIGHT RECT 12V REVERSE REFLEX	2
42	0311511	GROMMET, TAIL LIGHT, RECTANGULAR	8
43	0311755	WATER SEPARATOR-MONNIER	1
44	0312622	FITTING, 16FJ-6MJ	1
45	04000381	SS BHSCS 1/4-20 X 1	16
46	0400070	SCREW, 1/4-20X1 HHC GR5	6
47	0400078	SCREW, 1/4-20X2 HHC GR5	4
48	0400128	SCREW, 3/8-16X1-1/4 FHS GR8 BO	24
49	0400367	NUT, 1/4-20 LOK	4
50	0400369	NUT, 1/4 SPR J	8

ITEM	PART NUMBER	DESCRIPTION	QTY
51	0400393	NUT, 3/8-16 JAM	16
52	0400451	WASHER, 1/4	6
53	0400454	WASHER, 1/4 SS	22
54	0400491	LKWASHER, 1/2	14
55	0400498	WASHER, 1/2X2X0.125	14
56	0400687	SCREW, 10-24X3/4 PRH SS	4
57	0400816	WASHER, M10 SS	4
58	0401054	SCREW, 8-32X3/4 PRH SS	12
59	0402002	NUT, 8-32 LOK EXT SS	12
60	0402020	SCREW, 1/4-20X3/4 HHC SS	2
61	0402021	SCREW, 1/4-20X1 HHC SS	2
62	0402043	SCREW, 3/8-16X1-1/4 HHC SS	8
63	0402111	LKWASHER, 1/4 SS	18
64	0402113	NUT, 1/4-20 LOK SS	2
65	0402120	WASHER, 3/8 SS	16
66	0402121	LKWASHER, 3/8 SS	8
67	0402122	NUT, 3/8-16 HEX SS	8
68	0724476	PAD - NYLATRON - BBOM GUIDE	4
69	0724500	PIN - LOWER JACK LEG CYL	2
70	0726593	APNL-DCV LWR CTL PNL, 3 WINCH	2
71	0726594	APNL-DCV UPR LH CTL PNL,3WNCH	1
72	0726595	APNL-DCV UPR RH CTL PNL,3WNCH	1
73	0910787	STINGER ASSY - EURO - 144"	1
74	0911010	RECOVERY BOOM INSTALL V-70	1
75	0911120	LH REAR OUTRIGGER ASSY	1
76	0911121	RH REAR OUTRIGGER ASSY	1
77	0911804	AIR REGULATOR-GAUGE ASSEMBLY	2
78	0912015	SUBFRAME ASSY V70-100 STDWINCH	1
79	9010520	FITTING-ELBOW 1/4T-1/4NPT	2
80	9011053	FITTING, BRASS 1/4 TUBE-1/4 MP	1
81	9012594	FITT,HYD RUN TEE, 6MJx6MBx6MJ	1
82	9016815	MUNCIE PUMP TSPKS17-17-2BSSB	1
83	9024041	SWITCH, ROCKER SPST RED 12V21A	11
84	9041403	1/2 NC X 1 1/2 HHCS PL GR8	14
85	916770001	HOSE- HYD. 3/8 - 105" 8MJ-6MFA	2
86	920400005	MUD FLAP BRACE PLATE	2
87	9402970	TOOLBOX MTG. PAD	14
88	942480011	PLATE,SLOT-SS REAR WASHER TBOX	14
89	942480300	MTG ANGLE WELD'T LH - DCV COV.	2
90	942487300	MTG ANGLE WELD'T RH - DCV COV.	2
91	94320052	MUD FLAP 920-940 RUBBER	2
92	945770002	6AT2(6T90S-8MJ) HCL 48	2
93	945770003	6AT2(6T90L-8MJ) 24 HYD	4
94	946210500	TUBE, FRONT MTG WELD'T	1
95	946770003	HOSE ASSEMBLY - 8MJ-8MJ X 45	4
96	946770006	HOSE ASSEMBLY - 62	2
97	946770007	HOSE ASSEMBLY - 79	2
98	946770009	HOSE ASSEMBLY - 104	2
99	948570000	5x5 LIFT BAR ASSEMBLY 948 XHD	1
100	HA293	FITTING-ADPTR SWV RUN	1

09008490, BUA V70 2-WINCH REAR OUTRIGGER (cont'd)

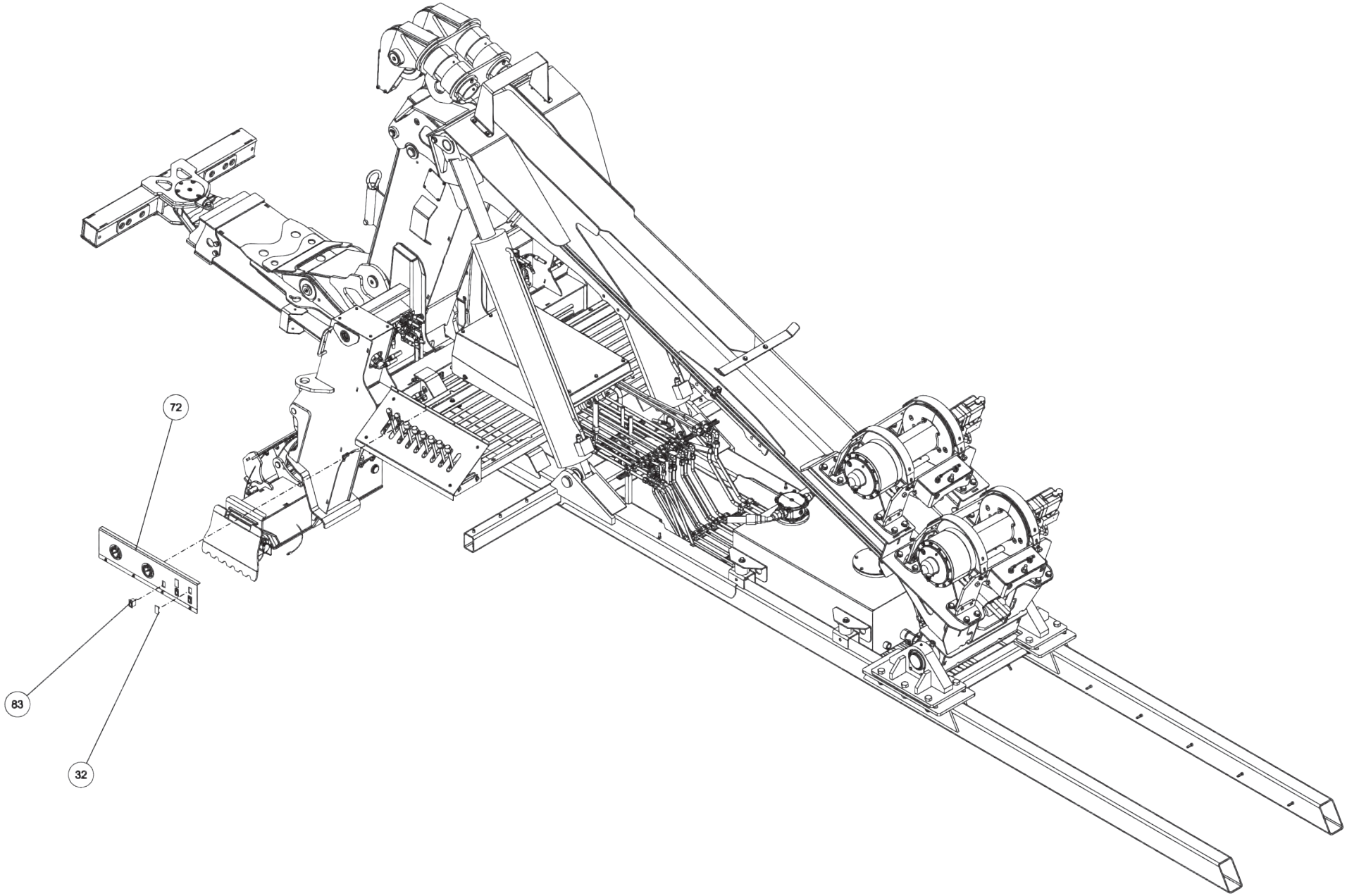

09008490, BUA V70 2-WINCH REAR OUTRIGGER (cont'd)

ITEM	PART NUMBER	DESCRIPTION	QTY
--	09008490	BUA V70 2W REAR OUTRIGGER	
1	0300044	FITT, HYD CONN. 6MJ-8MB	4
2	0300341	KNOB, BLACK (BLANK)	12
3	0300364	CLAMP-HOSE,0.875"-2.75" 50"LBS	8
4	0301470	FITTING, 90ELB 6MJ-8MB90	4
5	0301473	HOSE HYD, 18" LG	4
6	0301620	FITTING, HYD. 6MJ - 6MB90	5
7	0301696	FITTING, ELB 90 DEG 6MJ-6FJX90	5
8	0301895	GREASE FITTING, 1/8 STR PTF	2
9	0301909	RECEPTACLE BOOT	1
10	0301946	FITTING, BLKHD CONNECT	3
11	0301947	FITTING, 45 DEG ADAPTER	1
12	0301948	HD 7 WAY TRAILER CONNECT	1
13	0301959	SNAP RING-INTERNAL 1-1/2	4
14	0301998	HOSE HYD, 24" LG	4
15	0302205	GAUGE, FLUSH MNTG-6000 PSI	4
16	0302534	FITTING, 45 DEG ELBOW	2
17	0302698	FITTING, HOSE BARB,1-1/4	2
18	0302901	HOSE HYD, 120" 12C12	2
19	0303017	FITTING, CONNECTOR	4
20	0303170	HOSE, HYD. 75"	1
21	0303185	HOSE HYD, 66" LG.	1
22	0303538	FITT, ADAPTER -BRASS 8FP-6MP	1
23	0303539	QUICK DISCONNECT 3/8 FPT	1
24	0303948	ELBOW, 12MJ-16MB90	2
25	0304363	QUICK DISCONNECT 1/2 FPT	2
26	0306539	HOSE BARB 20HOSE16MB90	2
27	0306983	FITT-MALE RUNTEE 1/4T-1/4NPT	1
28	0307216	LIGHT, AMBER LED RECT 5.25x3.3	2
29	0307525	HOSE, HYD ASSY 120" LGTH 90L	4
30	0307538	LIGHT, MRKR-RED LED 4.5 X 1.63	4
31	0307604	KNOB, RED LONG - SK0700-07	4
32	0307778	PLUG, FILLER	2
33	0310010	SUCTION HOSE,1-1/4ID x50 100R4	1
34	0310881	6 WAY DIVERTER VALVE-12V	2
35	0310944	LH 200 CB TDM ALM BDY '10 VULC	1
36	0310945	RH 200 CB TDM ALM BDY '10 VULC	1
37	0311355	HOBBS HOURMETER	1
38	0311502	LIGHT 6"OVAL CLEAR-AMBER LED	6
39	0311503	GROMMET, LIGHT 6" OVAL	6
40	0311508	LED RECT RED STOP-CLEAR-12/24V	4
41	0311510	LIGHT RECT 12V REVERSE REFLEX	2
42	0311511	GROMMET, TAIL LIGHT, RECTANGULAR	8
43	0311755	WATER SEPARATOR-MONNIER	1
44	0312622	FITTING, 16FJ-6MJ	1
45	04000381	SS BHSCS 1/4-20 X 1	16
46	0400070	SCREW, 1/4-20X1 HHC GR5	6
47	0400078	SCREW, 1/4-20X2 HHC GR5	4
48	0400128	SCREW, 3/8-16X1-1/4 FHS GR8 BO	24
49	0400367	NUT, 1/4-20 LOK	4
50	0400369	NUT, 1/4 SPR J	8

ITEM	PART NUMBER	DESCRIPTION	QTY
51	0400393	NUT, 3/8-16 JAM	16
52	0400451	WASHER, 1/4	6
53	0400454	WASHER, 1/4 SS	22
54	0400491	LKWASHER, 1/2	14
55	0400498	WASHER, 1/2X2X0.125	14
56	0400687	SCREW, 10-24X3/4 PRH SS	4
57	0400816	WASHER, M10 SS	4
58	0401054	SCREW, 8-32X3/4 PRH SS	12
59	0402002	NUT, 8-32 LOK EXT SS	12
60	0402020	SCREW, 1/4-20X3/4 HHC SS	2
61	0402021	SCREW, 1/4-20X1 HHC SS	2
62	0402043	SCREW, 3/8-16X1-1/4 HHC SS	8
63	0402111	LKWASHER, 1/4 SS	18
64	0402113	NUT, 1/4-20 LOK SS	2
65	0402120	WASHER, 3/8 SS	16
66	0402121	LKWASHER, 3/8 SS	8
67	0402122	NUT, 3/8-16 HEX SS	8
68	0724476	PAD - NYLATRON - BBOM GUIDE	4
69	0724500	PIN - LOWER JACK LEG CYL	2
70	0726593	APNL-DCV LWR CTL PNL, 3 WINCH	2
71	0726594	APNL-DCV UPR LH CTL PNL,3WNCH	1
72	0726595	APNL-DCV UPR RH CTL PNL,3WNCH	1
73	0910787	STINGER ASSY - EURO - 144"	1
74	0911010	RECOVERY BOOM INSTALL V-70	1
75	0911120	LH REAR OUTRIGGER ASSY	1
76	0911121	RH REAR OUTRIGGER ASSY	1
77	0911804	AIR REGULATOR-GAUGE ASSEMBLY	2
78	0912015	SUBFRAME ASSY V70-100 STDWINCH	1
79	9010520	FITTING-ELBOW 1/4T-1/4NPT	2
80	9011053	FITTING, BRASS 1/4 TUBE-1/4 MP	1
81	9012594	FITT,HYD RUN TEE, 6MJx6MBx6MJ	1
82	9016815	MUNCIE PUMP TSPKS17-17-2BSSB	1
83	9024041	SWITCH, ROCKER SPST RED 12V21A	11
84	9041403	1/2 NC X 1 1/2 HHCS PL GR8	14
85	916770001	HOSE- HYD. 3/8 - 105" 8MJ-6MFA	2
86	920400005	MUD FLAP BRACE PLATE	2
87	9402970	TOOLBOX MTG. PAD	14
88	942480011	PLATE,SLOT-SS REAR WASHER TBOX	14
89	942480300	MTG ANGLE WELD'T LH - DCV COV.	2
90	942487300	MTG ANGLE WELD'T RH - DCV COV.	2
91	94320052	MUD FLAP 920-940 RUBBER	2
92	945770002	6AT2(6T90S-8MJ) HCL 48	2
93	945770003	6AT2(6T90L-8MJ) 24 HYD	4
94	946210500	TUBE, FRONT MTG WELD'T	1
95	946770003	HOSE ASSEMBLY - 8MJ-8MJ X 45	4
96	946770006	HOSE ASSEMBLY - 62	2
97	946770007	HOSE ASSEMBLY - 79	2
98	946770009	HOSE ASSEMBLY - 104	2
99	948570000	5x5 LIFT BAR ASSEMBLY 948 XHD	1
100	HA293	FITTING-ADPTR SWV RUN	1

09008490, BUA V70 2-WINCH REAR OUTRIGGER (cont'd)

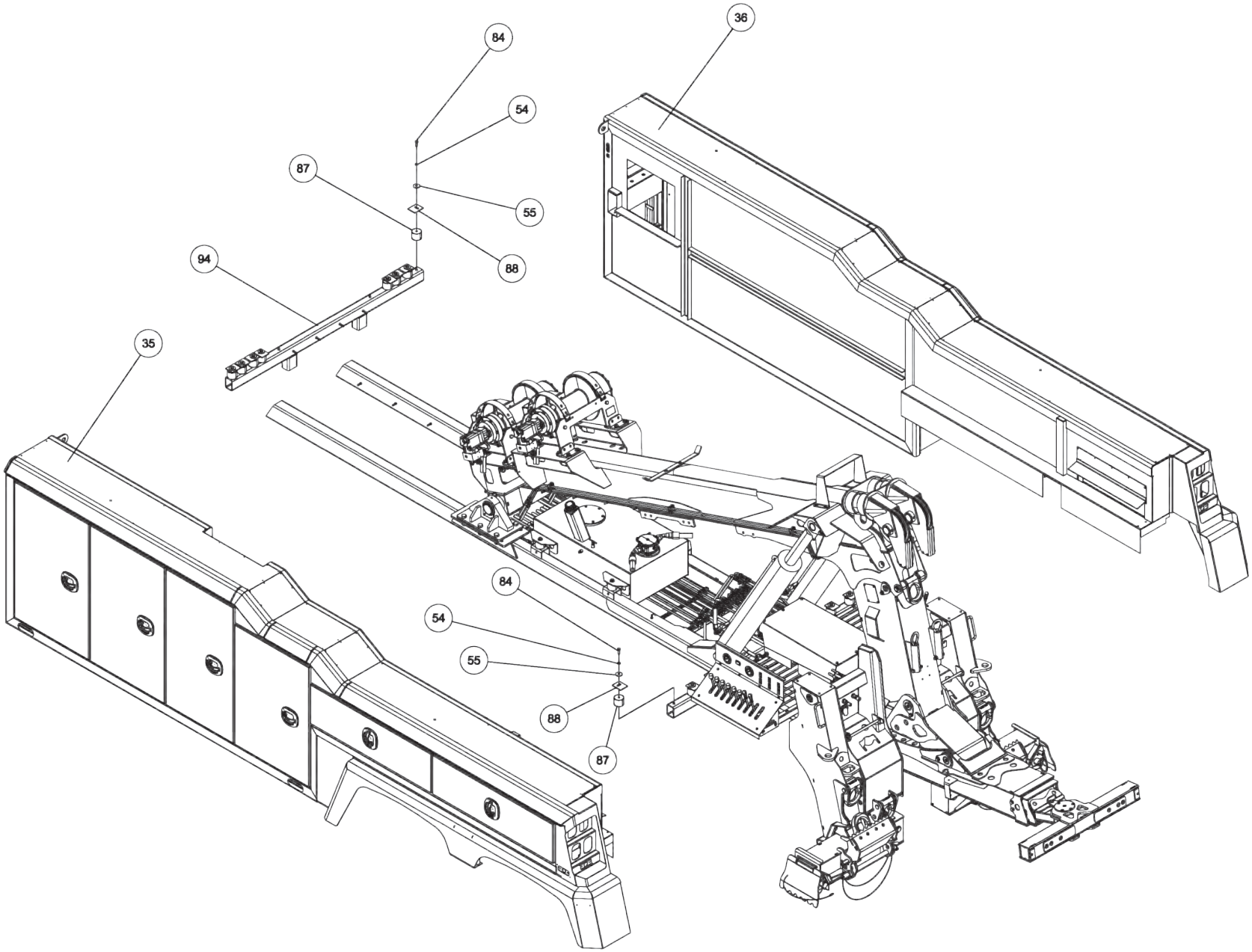

09008490, BUA V70 2-WINCH REAR OUTRIGGER (cont'd)

ITEM	PART NUMBER	DESCRIPTION	QTY
--	09008490	BUA V70 2W REAR OUTRIGGER	
1	0300044	FITT, HYD CONN. 6MJ-8MB	4
2	0300341	KNOB, BLACK (BLANK)	12
3	0300364	CLAMP-HOSE,0.875"-2.75" 50"LBS	8
4	0301470	FITTING, 90ELB 6MJ-8MB90	4
5	0301473	HOSE HYD, 18" LG	4
6	0301620	FITTING, HYD. 6MJ - 6MB90	5
7	0301696	FITTING, ELB 90 DEG 6MJ-6FJX90	5
8	0301895	GREASE FITTING, 1/8 STR PTF	2
9	0301909	RECEPTACLE BOOT	1
10	0301946	FITTING, BLKHD CONNECT	3
11	0301947	FITTING, 45 DEG ADAPTER	1
12	0301948	HD 7 WAY TRAILER CONNECT	1
13	0301959	SNAP RING-INTERNAL 1-1/2	4
14	0301998	HOSE HYD, 24" LG	4
15	0302205	GAUGE, FLUSH MNTG-6000 PSI	4
16	0302534	FITTING, 45 DEG ELBOW	2
17	0302698	FITTING, HOSE BARB,1-1/4	2
18	0302901	HOSE HYD, 120" 12C12	2
19	0303017	FITTING, CONNECTOR	4
20	0303170	HOSE, HYD. 75"	1
21	0303185	HOSE HYD, 66" LG.	1
22	0303538	FITT, ADAPTER -BRASS 8FP-6MP	1
23	0303539	QUICK DISCONNECT 3/8 FPT	1
24	0303948	ELBOW, 12MJ-16MB90	2
25	0304363	QUICK DISCONNECT 1/2 FPT	2
26	0306539	HOSE BARB 20HOSE16MB90	2
27	0306983	FITT-MALE RUNTEE 1/4T-1/4NPT	1
28	0307216	LIGHT, AMBER LED RECT 5.25x3.3	2
29	0307525	HOSE, HYD ASSY 120" LGTH 90L	4
30	0307538	LIGHT, MRKR-RED LED 4.5 X 1.63	4
31	0307604	KNOB, RED LONG - SK0700-07	4
32	0307778	PLUG, FILLER	2
33	0310010	SUCTION HOSE,1-1/4ID x50 100R4	1
34	0310881	6 WAY DIVERTER VALVE-12V	2
35	0310944	LH 200 CB TDM ALM BDY '10 VULC	1
36	0310945	RH 200 CB TDM ALM BDY '10 VULC	1
37	0311355	HOBBS HOURMETER	1
38	0311502	LIGHT 6"OVAL CLEAR-AMBER LED	6
39	0311503	GROMMET, LIGHT 6" OVAL	6
40	0311508	LED RECT RED STOP-CLEAR-12/24V	4
41	0311510	LIGHT RECT 12V REVERSE REFLEX	2
42	0311511	GROMMET, TAIL LIGHT, RECTANGULAR	8
43	0311755	WATER SEPARATOR-MONNIER	1
44	0312622	FITTING, 16FJ-6MJ	1
45	04000381	SS BHSCS 1/4-20 X 1	16
46	0400070	SCREW, 1/4-20X1 HHC GR5	6
47	0400078	SCREW, 1/4-20X2 HHC GR5	4
48	0400128	SCREW, 3/8-16X1-1/4 FHS GR8 BO	24
49	0400367	NUT, 1/4-20 LOK	4
50	0400369	NUT, 1/4 SPR J	8

ITEM	PART NUMBER	DESCRIPTION	QTY
51	0400393	NUT, 3/8-16 JAM	16
52	0400451	WASHER, 1/4	6
53	0400454	WASHER, 1/4 SS	22
54	0400491	LKWASHER, 1/2	14
55	0400498	WASHER, 1/2X2X0.125	14
56	0400687	SCREW, 10-24X3/4 PRH SS	4
57	0400816	WASHER, M10 SS	4
58	0401054	SCREW, 8-32X3/4 PRH SS	12
59	0402002	NUT, 8-32 LOK EXT SS	12
60	0402020	SCREW, 1/4-20X3/4 HHC SS	2
61	0402021	SCREW, 1/4-20X1 HHC SS	2
62	0402043	SCREW, 3/8-16X1-1/4 HHC SS	8
63	0402111	LKWASHER, 1/4 SS	18
64	0402113	NUT, 1/4-20 LOK SS	2
65	0402120	WASHER, 3/8 SS	16
66	0402121	LKWASHER, 3/8 SS	8
67	0402122	NUT, 3/8-16 HEX SS	8
68	0724476	PAD - NYLATRON - BBOM GUIDE	4
69	0724500	PIN - LOWER JACK LEG CYL	2
70	0726593	APNL-DCV LWR CTL PNL, 3 WINCH	2
71	0726594	APNL-DCV UPR LH CTL PNL,3WNCH	1
72	0726595	APNL-DCV UPR RH CTL PNL,3WNCH	1
73	0910787	STINGER ASSY - EURO - 144"	1
74	0911010	RECOVERY BOOM INSTALL V-70	1
75	0911120	LH REAR OUTRIGGER ASSY	1
76	0911121	RH REAR OUTRIGGER ASSY	1
77	0911804	AIR REGULATOR-GAUGE ASSEMBLY	2
78	0912015	SUBFRAME ASSY V70-100 STDWINCH	1
79	9010520	FITTING-ELBOW 1/4T-1/4NPT	2
80	9011053	FITTING, BRASS 1/4 TUBE-1/4 MP	1
81	9012594	FITT,HYD RUN TEE, 6MJx6MBx6MJ	1
82	9016815	MUNCIE PUMP TSPKS17-17-2BSSB	1
83	9024041	SWITCH, ROCKER SPST RED 12V21A	11
84	9041403	1/2 NC X 1 1/2 HHCS PL GR8	14
85	916770001	HOSE- HYD. 3/8 - 105" 8MJ-6MFA	2
86	920400005	MUD FLAP BRACE PLATE	2
87	9402970	TOOLBOX MTG. PAD	14
88	942480011	PLATE,SLOT-SS REAR WASHER TBOX	14
89	942480300	MTG ANGLE WELD'T LH - DCV COV.	2
90	942487300	MTG ANGLE WELD'T RH - DCV COV.	2
91	94320052	MUD FLAP 920-940 RUBBER	2
92	945770002	6AT2(6T90S-8MJ) HCL 48	2
93	945770003	6AT2(6T90L-8MJ) 24 HYD	4
94	946210500	TUBE, FRONT MTG WELD'T	1
95	946770003	HOSE ASSEMBLY - 8MJ-8MJ X 45	4
96	946770006	HOSE ASSEMBLY - 62	2
97	946770007	HOSE ASSEMBLY - 79	2
98	946770009	HOSE ASSEMBLY - 104	2
99	948570000	5x5 LIFT BAR ASSEMBLY 948 XHD	1
100	HA293	FITTING-ADPTR SWV RUN	1

09008490, BUA V70 2-WINCH REAR OUTRIGGER (cont'd)

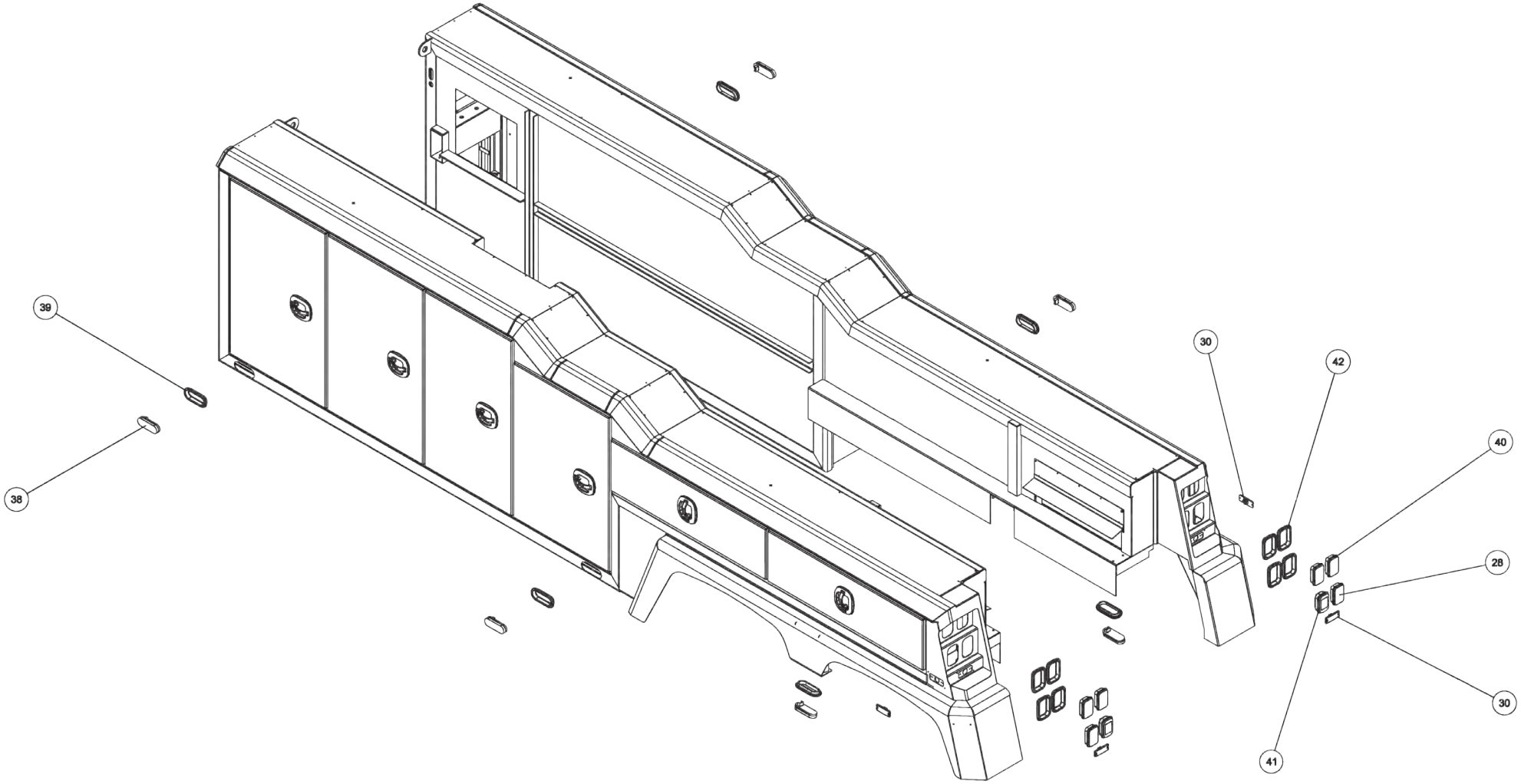

09008490, BUA V70 2-WINCH REAR OUTRIGGER (cont'd)

ITEM	PART NUMBER	DESCRIPTION	QTY
--	09008490	BUA V70 2W REAR OUTRIGGER	
1	0300044	FITT, HYD CONN. 6MJ-8MB	4
2	0300341	KNOB, BLACK (BLANK)	12
3	0300364	CLAMP-HOSE,0.875"-2.75" 50"LBS	8
4	0301470	FITTING, 90ELB 6MJ-8MB90	4
5	0301473	HOSE HYD, 18" LG	4
6	0301620	FITTING, HYD. 6MJ - 6MB90	5
7	0301696	FITTING, ELB 90 DEG 6MJ-6FJX90	5
8	0301895	GREASE FITTING, 1/8 STR PTF	2
9	0301909	RECEPTACLE BOOT	1
10	0301946	FITTING, BLKHD CONNECT	3
11	0301947	FITTING, 45 DEG ADAPTER	1
12	0301948	HD 7 WAY TRAILER CONNECT	1
13	0301959	SNAP RING-INTERNAL 1-1/2	4
14	0301998	HOSE HYD, 24" LG	4
15	0302205	GAUGE, FLUSH MNTG-6000 PSI	4
16	0302534	FITTING, 45 DEG ELBOW	2
17	0302698	FITTING, HOSE BARB,1-1/4	2
18	0302901	HOSE HYD, 120" 12C12	2
19	0303017	FITTING, CONNECTOR	4
20	0303170	HOSE, HYD. 75"	1
21	0303185	HOSE HYD, 66" LG.	1
22	0303538	FITT, ADAPTER -BRASS 8FP-6MP	1
23	0303539	QUICK DISCONNECT 3/8 FPT	1
24	0303948	ELBOW, 12MJ-16MB90	2
25	0304363	QUICK DISCONNECT 1/2 FPT	2
26	0306539	HOSE BARB 20HOSE16MB90	2
27	0306983	FITT-MALE RUNTEE 1/4T-1/4NPT	1
28	0307216	LIGHT, AMBER LED RECT 5.25x3.3	2
29	0307525	HOSE, HYD ASSY 120" LGTH 90L	4
30	0307538	LIGHT, MRKR-RED LED 4.5 X 1.63	4
31	0307604	KNOB, RED LONG - SK0700-07	4
32	0307778	PLUG, FILLER	2
33	0310010	SUCTION HOSE,1-1/4ID x50 100R4	1
34	0310881	6 WAY DIVERTER VALVE-12V	2
35	0310944	LH 200 CB TDM ALM BDY '10 VULC	1
36	0310945	RH 200 CB TDM ALM BDY '10 VULC	1
37	0311355	HOBBS HOURMETER	1
38	0311502	LIGHT 6"OVAL CLEAR-AMBER LED	6
39	0311503	GROMMET, LIGHT 6" OVAL	6
40	0311508	LED RECT RED STOP-CLEAR-12/24V	4
41	0311510	LIGHT RECT 12V REVERSE REFLEX	2
42	0311511	GROMMET, TAIL LIGHT, RECTANGULAR	8
43	0311755	WATER SEPARATOR-MONNIER	1
44	0312622	FITTING, 16FJ-6MJ	1
45	04000381	SS BHSCS 1/4-20 X 1	16
46	0400070	SCREW, 1/4-20X1 HHC GR5	6
47	0400078	SCREW, 1/4-20X2 HHC GR5	4
48	0400128	SCREW, 3/8-16X1-1/4 FHS GR8 BO	24
49	0400367	NUT, 1/4-20 LOK	4
50	0400369	NUT, 1/4 SPR J	8

ITEM	PART NUMBER	DESCRIPTION	QTY
51	0400393	NUT, 3/8-16 JAM	16
52	0400451	WASHER, 1/4	6
53	0400454	WASHER, 1/4 SS	22
54	0400491	LKWASHER, 1/2	14
55	0400498	WASHER, 1/2X2X0.125	14
56	0400687	SCREW, 10-24X3/4 PRH SS	4
57	0400816	WASHER, M10 SS	4
58	0401054	SCREW, 8-32X3/4 PRH SS	12
59	0402002	NUT, 8-32 LOK EXT SS	12
60	0402020	SCREW, 1/4-20X3/4 HHC SS	2
61	0402021	SCREW, 1/4-20X1 HHC SS	2
62	0402043	SCREW, 3/8-16X1-1/4 HHC SS	8
63	0402111	LKWASHER, 1/4 SS	18
64	0402113	NUT, 1/4-20 LOK SS	2
65	0402120	WASHER, 3/8 SS	16
66	0402121	LKWASHER, 3/8 SS	8
67	0402122	NUT, 3/8-16 HEX SS	8
68	0724476	PAD - NYLATRON - BBOM GUIDE	4
69	0724500	PIN - LOWER JACK LEG CYL	2
70	0726593	APNL-DCV LWR CTL PNL, 3 WINCH	2
71	0726594	APNL-DCV UPR LH CTL PNL,3WNCH	1
72	0726595	APNL-DCV UPR RH CTL PNL,3WNCH	1
73	0910787	STINGER ASSY - EURO - 144"	1
74	0911010	RECOVERY BOOM INSTALL V-70	1
75	0911120	LH REAR OUTRIGGER ASSY	1
76	0911121	RH REAR OUTRIGGER ASSY	1
77	0911804	AIR REGULATOR-GAUGE ASSEMBLY	2
78	0912015	SUBFRAME ASSY V70-100 STDWINCH	1
79	9010520	FITTING-ELBOW 1/4T-1/4NPT	2
80	9011053	FITTING, BRASS 1/4 TUBE-1/4 MP	1
81	9012594	FITT,HYD RUN TEE, 6MJx6MBx6MJ	1
82	9016815	MUNCIE PUMP TSPKS17-17-2BSSB	1
83	9024041	SWITCH, ROCKER SPST RED 12V21A	11
84	9041403	1/2 NC X 1 1/2 HHCS PL GR8	14
85	916770001	HOSE- HYD. 3/8 - 105" 8MJ-6MFA	2
86	920400005	MUD FLAP BRACE PLATE	2
87	9402970	TOOLBOX MTG. PAD	14
88	942480011	PLATE,SLOT-SS REAR WASHER TBOX	14
89	942480300	MTG ANGLE WELD'T LH - DCV COV.	2
90	942487300	MTG ANGLE WELD'T RH - DCV COV.	2
91	94320052	MUD FLAP 920-940 RUBBER	2
92	945770002	6AT2(6T90S-8MJ) HCL 48	2
93	945770003	6AT2(6T90L-8MJ) 24 HYD	4
94	946210500	TUBE, FRONT MTG WELD'T	1
95	946770003	HOSE ASSEMBLY - 8MJ-8MJ X 45	4
96	946770006	HOSE ASSEMBLY - 62	2
97	946770007	HOSE ASSEMBLY - 79	2
98	946770009	HOSE ASSEMBLY - 104	2
99	948570000	5x5 LIFT BAR ASSEMBLY 948 XHD	1
100	HA293	FITTING-ADPTR SWV RUN	1

09008490, BUA V70 2-WINCH REAR OUTRIGGER (cont'd)

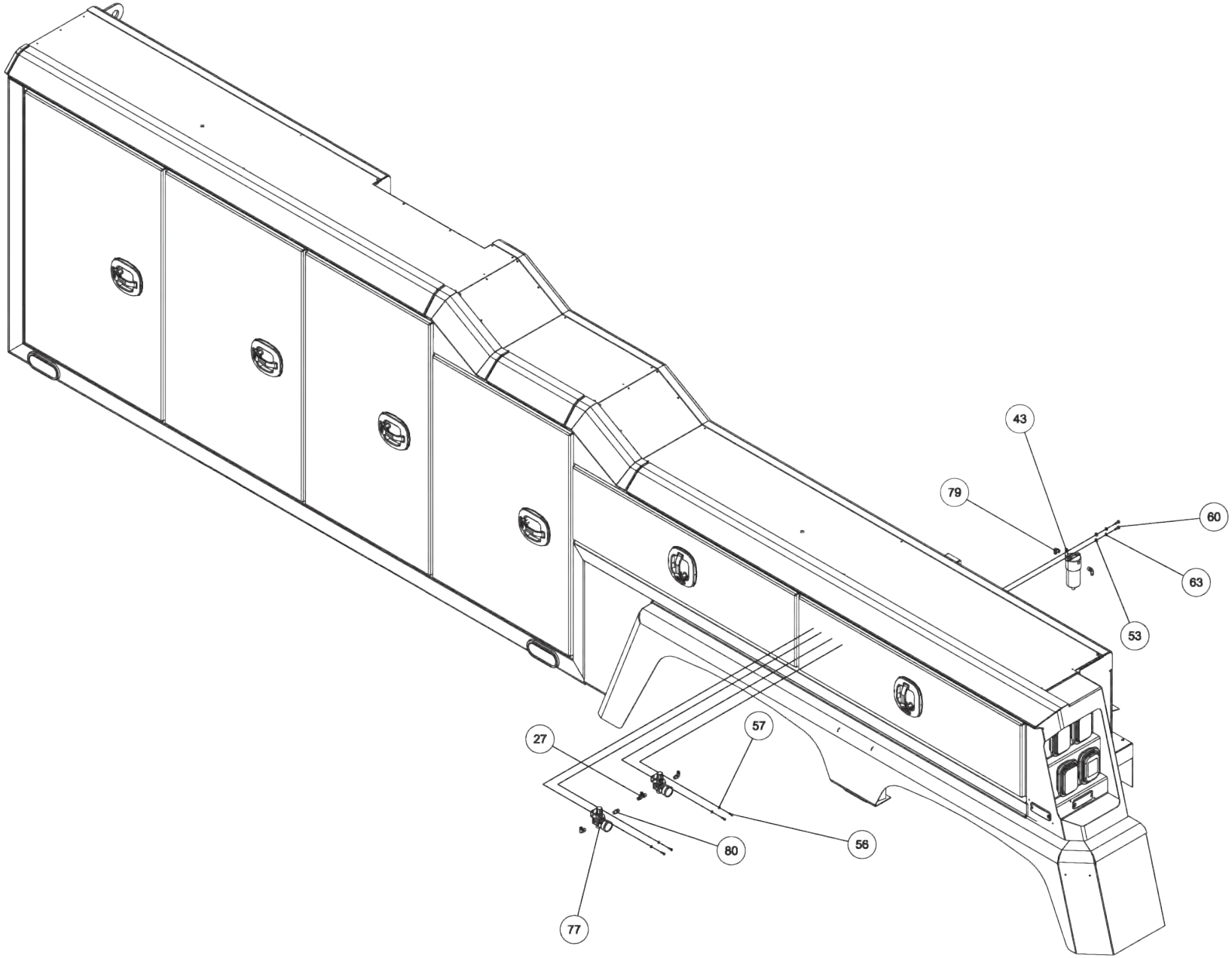

09008490, BUA V70 2-WINCH REAR OUTRIGGER (cont'd)

ITEM	PART NUMBER	DESCRIPTION	QTY
--	09008490	BUA V70 2W REAR OUTRIGGER	
1	0300044	FITT, HYD CONN. 6MJ-8MB	4
2	0300341	KNOB, BLACK (BLANK)	12
3	0300364	CLAMP-HOSE,0.875"-2.75" 50"LBS	8
4	0301470	FITTING, 90ELB 6MJ-8MB90	4
5	0301473	HOSE HYD, 18" LG	4
6	0301620	FITTING, HYD. 6MJ - 6MB90	5
7	0301696	FITTING, ELB 90 DEG 6MJ-6FJX90	5
8	0301895	GREASE FITTING, 1/8 STR PTF	2
9	0301909	RECEPTACLE BOOT	1
10	0301946	FITTING, BLKHD CONNECT	3
11	0301947	FITTING, 45 DEG ADAPTER	1
12	0301948	HD 7 WAY TRAILER CONNECT	1
13	0301959	SNAP RING-INTERNAL 1-1/2	4
14	0301998	HOSE HYD, 24" LG	4
15	0302205	GAUGE, FLUSH MNTG-6000 PSI	4
16	0302534	FITTING, 45 DEG ELBOW	2
17	0302698	FITTING, HOSE BARB,1-1/4	2
18	0302901	HOSE HYD, 120" 12C12	2
19	0303017	FITTING, CONNECTOR	4
20	0303170	HOSE, HYD. 75"	1
21	0303185	HOSE HYD, 66" LG.	1
22	0303538	FITT, ADAPTER -BRASS 8FP-6MP	1
23	0303539	QUICK DISCONNECT 3/8 FPT	1
24	0303948	ELBOW, 12MJ-16MB90	2
25	0304363	QUICK DISCONNECT 1/2 FPT	2
26	0306539	HOSE BARB 20HOSE16MB90	2
27	0306983	FITT-MALE RUNTEE 1/4T-1/4NPT	1
28	0307216	LIGHT, AMBER LED RECT 5.25x3.3	2
29	0307525	HOSE, HYD ASSY 120" LGTH 90L	4
30	0307538	LIGHT, MRKR-RED LED 4.5 X 1.63	4
31	0307604	KNOB, RED LONG - SK0700-07	4
32	0307778	PLUG, FILLER	2
33	0310010	SUCTION HOSE,1-1/4ID x50 100R4	1
34	0310881	6 WAY DIVERTER VALVE-12V	2
35	0310944	LH 200 CB TDM ALM BDY '10 VULC	1
36	0310945	RH 200 CB TDM ALM BDY '10 VULC	1
37	0311355	HOBBS HOURMETER	1
38	0311502	LIGHT 6"OVAL CLEAR-AMBER LED	6
39	0311503	GROMMET, LIGHT 6" OVAL	6
40	0311508	LED RECT RED STOP-CLEAR-12/24V	4
41	0311510	LIGHT RECT 12V REVERSE REFLEX	2
42	0311511	GROMMET, TAIL LIGHT, RECTANGULAR	8
43	0311755	WATER SEPARATOR-MONNIER	1
44	0312622	FITTING, 16FJ-6MJ	1
45	04000381	SS BHSCS 1/4-20 X 1	16
46	0400070	SCREW, 1/4-20X1 HHC GR5	6
47	0400078	SCREW, 1/4-20X2 HHC GR5	4
48	0400128	SCREW, 3/8-16X1-1/4 FHS GR8 BO	24
49	0400367	NUT, 1/4-20 LOK	4
50	0400369	NUT, 1/4 SPR J	8

ITEM	PART NUMBER	DESCRIPTION	QTY
51	0400393	NUT, 3/8-16 JAM	16
52	0400451	WASHER, 1/4	6
53	0400454	WASHER, 1/4 SS	22
54	0400491	LKWASHER, 1/2	14
55	0400498	WASHER, 1/2X2X0.125	14
56	0400687	SCREW, 10-24X3/4 PRH SS	4
57	0400816	WASHER, M10 SS	4
58	0401054	SCREW, 8-32X3/4 PRH SS	12
59	0402002	NUT, 8-32 LOK EXT SS	12
60	0402020	SCREW, 1/4-20X3/4 HHC SS	2
61	0402021	SCREW, 1/4-20X1 HHC SS	2
62	0402043	SCREW, 3/8-16X1-1/4 HHC SS	8
63	0402111	LKWASHER, 1/4 SS	18
64	0402113	NUT, 1/4-20 LOK SS	2
65	0402120	WASHER, 3/8 SS	16
66	0402121	LKWASHER, 3/8 SS	8
67	0402122	NUT, 3/8-16 HEX SS	8
68	0724476	PAD - NYLATRON - BBOM GUIDE	4
69	0724500	PIN - LOWER JACK LEG CYL	2
70	0726593	APNL-DCV LWR CTL PNL, 3 WINCH	2
71	0726594	APNL-DCV UPR LH CTL PNL,3WNCH	1
72	0726595	APNL-DCV UPR RH CTL PNL,3WNCH	1
73	0910787	STINGER ASSY - EURO - 144"	1
74	0911010	RECOVERY BOOM INSTALL V-70	1
75	0911120	LH REAR OUTRIGGER ASSY	1
76	0911121	RH REAR OUTRIGGER ASSY	1
77	0911804	AIR REGULATOR-GAUGE ASSEMBLY	2
78	0912015	SUBFRAME ASSY V70-100 STDWINCH	1
79	9010520	FITTING-ELBOW 1/4T-1/4NPT	2
80	9011053	FITTING, BRASS 1/4 TUBE-1/4 MP	1
81	9012594	FITT,HYD RUN TEE, 6MJx6MBx6MJ	1
82	9016815	MUNCIE PUMP TSPKS17-17-2BSSB	1
83	9024041	SWITCH, ROCKER SPST RED 12V21A	11
84	9041403	1/2 NC X 1 1/2 HHCS PL GR8	14
85	916770001	HOSE- HYD. 3/8 - 105" 8MJ-6MFA	2
86	920400005	MUD FLAP BRACE PLATE	2
87	9402970	TOOLBOX MTG. PAD	14
88	942480011	PLATE,SLOT-SS REAR WASHER TBOX	14
89	942480300	MTG ANGLE WELD'T LH - DCV COV.	2
90	942487300	MTG ANGLE WELD'T RH - DCV COV.	2
91	94320052	MUD FLAP 920-940 RUBBER	2
92	945770002	6AT2(6T90S-8MJ) HCL 48	2
93	945770003	6AT2(6T90L-8MJ) 24 HYD	4
94	946210500	TUBE, FRONT MTG WELD'T	1
95	946770003	HOSE ASSEMBLY - 8MJ-8MJ X 45	4
96	946770006	HOSE ASSEMBLY - 62	2
97	946770007	HOSE ASSEMBLY - 79	2
98	946770009	HOSE ASSEMBLY - 104	2
99	948570000	5x5 LIFT BAR ASSEMBLY 948 XHD	1
100	HA293	FITTING-ADPTR SWV RUN	1

09008490, BUA V70 2-WINCH REAR OUTRIGGER (cont'd)

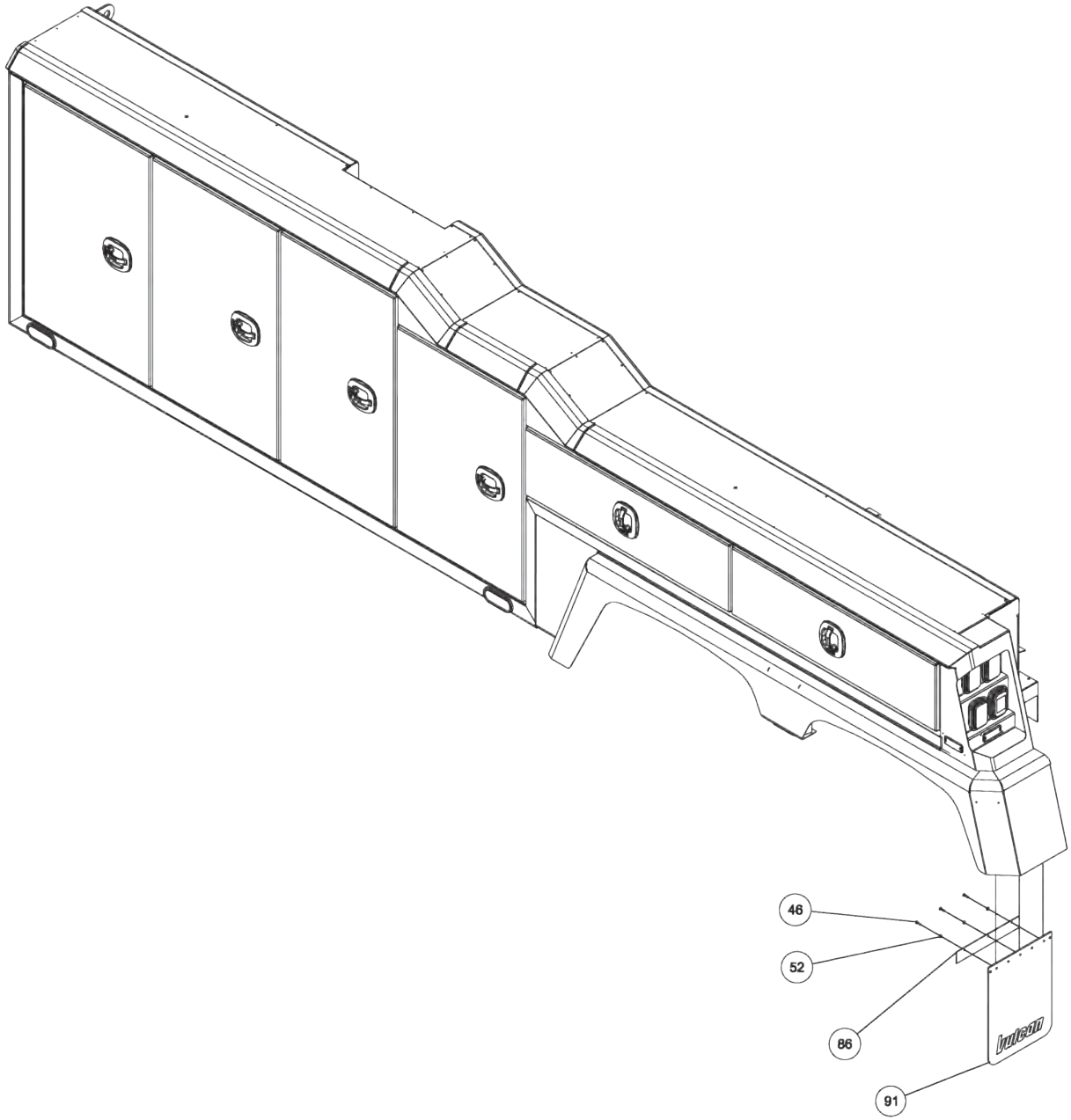

09008490, BUA V70 2-WINCH REAR OUTRIGGER (cont'd)

ITEM	PART NUMBER	DESCRIPTION	QTY
--	09008490	BUA V70 2W REAR OUTRIGGER	
1	0300044	FITT, HYD CONN. 6MJ-8MB	4
2	0300341	KNOB, BLACK (BLANK)	12
3	0300364	CLAMP-HOSE,0.875"-2.75" 50"LBS	8
4	0301470	FITTING, 90ELB 6MJ-8MB90	4
5	0301473	HOSE HYD, 18" LG	4
6	0301620	FITTING, HYD. 6MJ - 6MB90	5
7	0301696	FITTING, ELB 90 DEG 6MJ-6FJX90	5
8	0301895	GREASE FITTING, 1/8 STR PTF	2
9	0301909	RECEPTACLE BOOT	1
10	0301946	FITTING, BLKHD CONNECT	3
11	0301947	FITTING, 45 DEG ADAPTER	1
12	0301948	HD 7 WAY TRAILER CONNECT	1
13	0301959	SNAP RING-INTERNAL 1-1/2	4
14	0301998	HOSE HYD, 24" LG	4
15	0302205	GAUGE, FLUSH MNTG-6000 PSI	4
16	0302534	FITTING, 45 DEG ELBOW	2
17	0302698	FITTING, HOSE BARB,1-1/4	2
18	0302901	HOSE HYD, 120" 12C12	2
19	0303017	FITTING, CONNECTOR	4
20	0303170	HOSE, HYD. 75"	1
21	0303185	HOSE HYD, 66" LG.	1
22	0303538	FITT, ADAPTER -BRASS 8FP-6MP	1
23	0303539	QUICK DISCONNECT 3/8 FPT	1
24	0303948	ELBOW, 12MJ-16MB90	2
25	0304363	QUICK DISCONNECT 1/2 FPT	2
26	0306539	HOSE BARB 20HOSE16MB90	2
27	0306983	FITT-MALE RUNTEE 1/4T-1/4NPT	1
28	0307216	LIGHT, AMBER LED RECT 5.25x3.3	2
29	0307525	HOSE, HYD ASSY 120" LGTH 90L	4
30	0307538	LIGHT, MRKR-RED LED 4.5 X 1.63	4
31	0307604	KNOB, RED LONG - SK0700-07	4
32	0307778	PLUG, FILLER	2
33	0310010	SUCTION HOSE,1-1/4ID x50 100R4	1
34	0310881	6 WAY DIVERTER VALVE-12V	2
35	0310944	LH 200 CB TDM ALM BDY '10 VULC	1
36	0310945	RH 200 CB TDM ALM BDY '10 VULC	1
37	0311355	HOBBS HOURMETER	1
38	0311502	LIGHT 6"OVAL CLEAR-AMBER LED	6
39	0311503	GROMMET, LIGHT 6" OVAL	6
40	0311508	LED RECT RED STOP-CLEAR-12/24V	4
41	0311510	LIGHT RECT 12V REVERSE REFLEX	2
42	0311511	GROMMET, TAIL LIGHT, RECTANGULAR	8
43	0311755	WATER SEPARATOR-MONNIER	1
44	0312622	FITTING, 16FJ-6MJ	1
45	04000381	SS BHSCS 1/4-20 X 1	16
46	0400070	SCREW, 1/4-20X1 HHC GR5	6
47	0400078	SCREW, 1/4-20X2 HHC GR5	4
48	0400128	SCREW, 3/8-16X1-1/4 FHS GR8 BO	24
49	0400367	NUT, 1/4-20 LOK	4
50	0400369	NUT, 1/4 SPR J	8

ITEM	PART NUMBER	DESCRIPTION	QTY
51	0400393	NUT, 3/8-16 JAM	16
52	0400451	WASHER, 1/4	6
53	0400454	WASHER, 1/4 SS	22
54	0400491	LKWASHER, 1/2	14
55	0400498	WASHER, 1/2X2X0.125	14
56	0400687	SCREW, 10-24X3/4 PRH SS	4
57	0400816	WASHER, M10 SS	4
58	0401054	SCREW, 8-32X3/4 PRH SS	12
59	0402002	NUT, 8-32 LOK EXT SS	12
60	0402020	SCREW, 1/4-20X3/4 HHC SS	2
61	0402021	SCREW, 1/4-20X1 HHC SS	2
62	0402043	SCREW, 3/8-16X1-1/4 HHC SS	8
63	0402111	LKWASHER, 1/4 SS	18
64	0402113	NUT, 1/4-20 LOK SS	2
65	0402120	WASHER, 3/8 SS	16
66	0402121	LKWASHER, 3/8 SS	8
67	0402122	NUT, 3/8-16 HEX SS	8
68	0724476	PAD - NYLATRON - BBOM GUIDE	4
69	0724500	PIN - LOWER JACK LEG CYL	2
70	0726593	APNL-DCV LWR CTL PNL, 3 WINCH	2
71	0726594	APNL-DCV UPR LH CTL PNL,3WNCH	1
72	0726595	APNL-DCV UPR RH CTL PNL,3WNCH	1
73	0910787	STINGER ASSY - EURO - 144"	1
74	0911010	RECOVERY BOOM INSTALL V-70	1
75	0911120	LH REAR OUTRIGGER ASSY	1
76	0911121	RH REAR OUTRIGGER ASSY	1
77	0911804	AIR REGULATOR-GAUGE ASSEMBLY	2
78	0912015	SUBFRAME ASSY V70-100 STDWINCH	1
79	9010520	FITTING-ELBOW 1/4T-1/4NPT	2
80	9011053	FITTING, BRASS 1/4 TUBE-1/4 MP	1
81	9012594	FITT,HYD RUN TEE, 6MJx6MBx6MJ	1
82	9016815	MUNCIE PUMP TSPKS17-17-2BSSB	1
83	9024041	SWITCH, ROCKER SPST RED 12V21A	11
84	9041403	1/2 NC X 1 1/2 HHCS PL GR8	14
85	916770001	HOSE- HYD. 3/8 - 105" 8MJ-6MFA	2
86	920400005	MUD FLAP BRACE PLATE	2
87	9402970	TOOLBOX MTG. PAD	14
88	942480011	PLATE,SLOT-SS REAR WASHER TBOX	14
89	942480300	MTG ANGLE WELD'T LH - DCV COV.	2
90	942487300	MTG ANGLE WELD'T RH - DCV COV.	2
91	94320052	MUD FLAP 920-940 RUBBER	2
92	945770002	6AT2(6T90S-8MJ) HCL 48	2
93	945770003	6AT2(6T90L-8MJ) 24 HYD	4
94	946210500	TUBE, FRONT MTG WELD'T	1
95	946770003	HOSE ASSEMBLY - 8MJ-8MJ X 45	4
96	946770006	HOSE ASSEMBLY - 62	2
97	946770007	HOSE ASSEMBLY - 79	2
98	946770009	HOSE ASSEMBLY - 104	2
99	948570000	5x5 LIFT BAR ASSEMBLY 948 XHD	1
100	HA293	FITTING-ADPTR SWV RUN	1

09008490, BUA V70 2-WINCH REAR OUTRIGGER (cont'd)

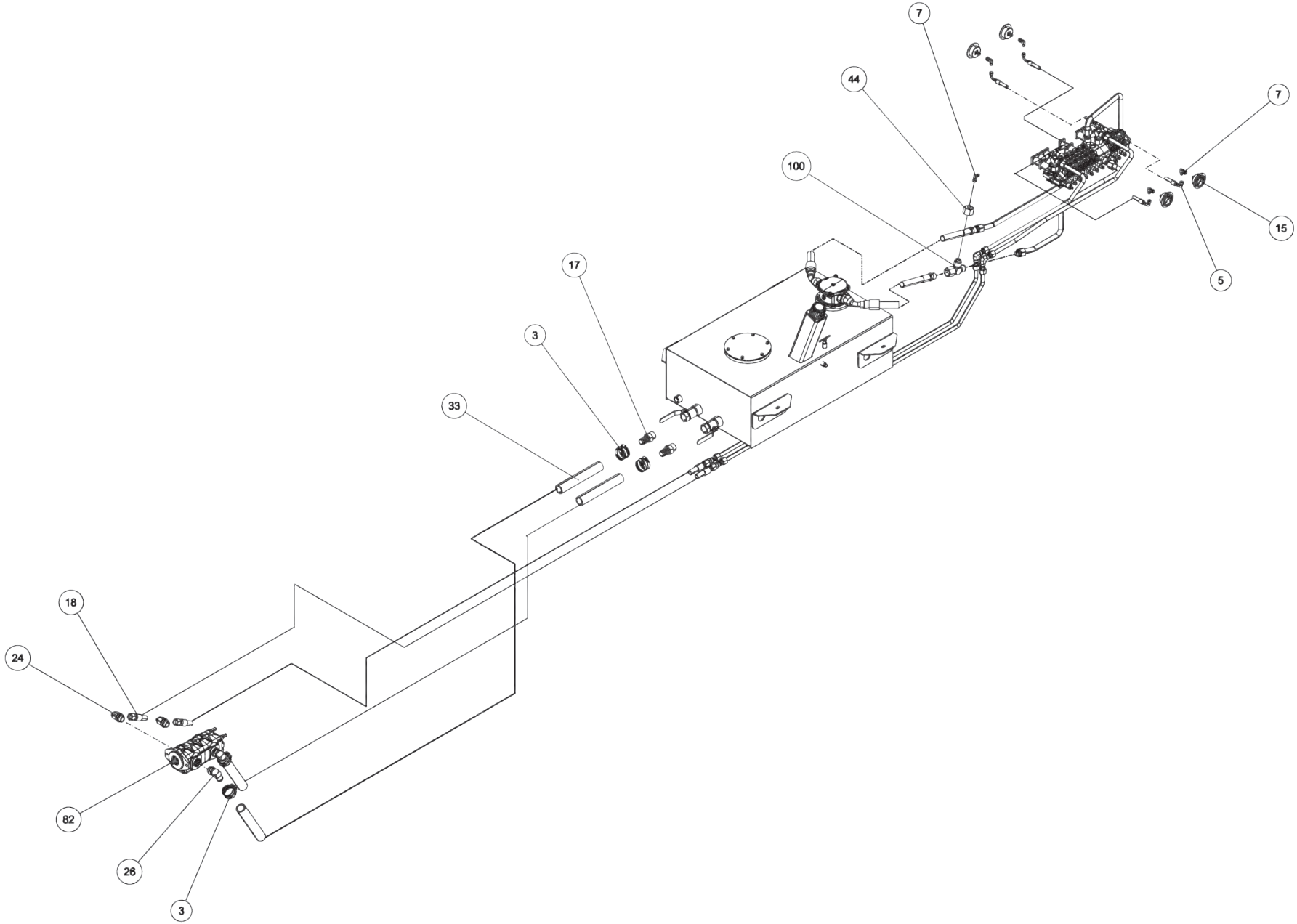

09008490, BUA V70 2-WINCH REAR OUTRIGGER (cont'd)

ITEM	PART NUMBER	DESCRIPTION	QTY
--	09008490	BUA V70 2W REAR OUTRIGGER	
1	0300044	FITT, HYD CONN. 6MJ-8MB	4
2	0300341	KNOB, BLACK (BLANK)	12
3	0300364	CLAMP-HOSE,0.875"-2.75" 50"LBS	8
4	0301470	FITTING, 90ELB 6MJ-8MB90	4
5	0301473	HOSE HYD, 18" LG	4
6	0301620	FITTING, HYD. 6MJ - 6MB90	5
7	0301696	FITTING, ELB 90 DEG 6MJ-6FJX90	5
8	0301895	GREASE FITTING, 1/8 STR PTF	2
9	0301909	RECEPTACLE BOOT	1
10	0301946	FITTING, BLKHD CONNECT	3
11	0301947	FITTING, 45 DEG ADAPTER	1
12	0301948	HD 7 WAY TRAILER CONNECT	1
13	0301959	SNAP RING-INTERNAL 1-1/2	4
14	0301998	HOSE HYD, 24" LG	4
15	0302205	GAUGE, FLUSH MNTG-6000 PSI	4
16	0302534	FITTING, 45 DEG ELBOW	2
17	0302698	FITTING, HOSE BARB,1-1/4	2
18	0302901	HOSE HYD, 120" 12C12	2
19	0303017	FITTING, CONNECTOR	4
20	0303170	HOSE, HYD. 75"	1
21	0303185	HOSE HYD, 66" LG.	1
22	0303538	FITT, ADAPTER -BRASS 8FP-6MP	1
23	0303539	QUICK DISCONNECT 3/8 FPT	1
24	0303948	ELBOW, 12MJ-16MB90	2
25	0304363	QUICK DISCONNECT 1/2 FPT	2
26	0306539	HOSE BARB 20HOSE16MB90	2
27	0306983	FITT-MALE RUNTEE 1/4T-1/4NPT	1
28	0307216	LIGHT, AMBER LED RECT 5.25x3.3	2
29	0307525	HOSE, HYD ASSY 120" LGTH 90L	4
30	0307538	LIGHT, MRKR-RED LED 4.5 X 1.63	4
31	0307604	KNOB, RED LONG - SK0700-07	4
32	0307778	PLUG, FILLER	2
33	0310010	SUCTION HOSE,1-1/4ID x50 100R4	1
34	0310881	6 WAY DIVERTER VALVE-12V	2
35	0310944	LH 200 CB TDM ALM BDY '10 VULC	1
36	0310945	RH 200 CB TDM ALM BDY '10 VULC	1
37	0311355	HOBBS HOURMETER	1
38	0311502	LIGHT 6"OVAL CLEAR-AMBER LED	6
39	0311503	GROMMET, LIGHT 6" OVAL	6
40	0311508	LED RECT RED STOP-CLEAR-12/24V	4
41	0311510	LIGHT RECT 12V REVERSE REFLEX	2
42	0311511	GROMMET, TAIL LIGHT, RECTANGULAR	8
43	0311755	WATER SEPARATOR-MONNIER	1
44	0312622	FITTING, 16FJ-6MJ	1
45	04000381	SS BHSCS 1/4-20 X 1	16
46	0400070	SCREW, 1/4-20X1 HHC GR5	6
47	0400078	SCREW, 1/4-20X2 HHC GR5	4
48	0400128	SCREW, 3/8-16X1-1/4 FHS GR8 BO	24
49	0400367	NUT, 1/4-20 LOK	4
50	0400369	NUT, 1/4 SPR J	8

ITEM	PART NUMBER	DESCRIPTION	QTY
51	0400393	NUT, 3/8-16 JAM	16
52	0400451	WASHER, 1/4	6
53	0400454	WASHER, 1/4 SS	22
54	0400491	LKWASHER, 1/2	14
55	0400498	WASHER, 1/2X2X0.125	14
56	0400687	SCREW, 10-24X3/4 PRH SS	4
57	0400816	WASHER, M10 SS	4
58	0401054	SCREW, 8-32X3/4 PRH SS	12
59	0402002	NUT, 8-32 LOK EXT SS	12
60	0402020	SCREW, 1/4-20X3/4 HHC SS	2
61	0402021	SCREW, 1/4-20X1 HHC SS	2
62	0402043	SCREW, 3/8-16X1-1/4 HHC SS	8
63	0402111	LKWASHER, 1/4 SS	18
64	0402113	NUT, 1/4-20 LOK SS	2
65	0402120	WASHER, 3/8 SS	16
66	0402121	LKWASHER, 3/8 SS	8
67	0402122	NUT, 3/8-16 HEX SS	8
68	0724476	PAD - NYLATRON - BBOM GUIDE	4
69	0724500	PIN - LOWER JACK LEG CYL	2
70	0726593	APNL-DCV LWR CTL PNL, 3 WINCH	2
71	0726594	APNL-DCV UPR LH CTL PNL,3WNCH	1
72	0726595	APNL-DCV UPR RH CTL PNL,3WNCH	1
73	0910787	STINGER ASSY - EURO - 144"	1
74	0911010	RECOVERY BOOM INSTALL V-70	1
75	0911120	LH REAR OUTRIGGER ASSY	1
76	0911121	RH REAR OUTRIGGER ASSY	1
77	0911804	AIR REGULATOR-GAUGE ASSEMBLY	2
78	0912015	SUBFRAME ASSY V70-100 STDWINCH	1
79	9010520	FITTING-ELBOW 1/4T-1/4NPT	2
80	9011053	FITTING, BRASS 1/4 TUBE-1/4 MP	1
81	9012594	FITT,HYD RUN TEE, 6MJx6MBx6MJ	1
82	9016815	MUNCIE PUMP TSPKS17-17-2BSSB	1
83	9024041	SWITCH, ROCKER SPST RED 12V21A	11
84	9041403	1/2 NC X 1 1/2 HHCS PL GR8	14
85	916770001	HOSE- HYD. 3/8 - 105" 8MJ-6MFA	2
86	920400005	MUD FLAP BRACE PLATE	2
87	9402970	TOOLBOX MTG. PAD	14
88	942480011	PLATE,SLOT-SS REAR WASHER TBOX	14
89	942480300	MTG ANGLE WELD'T LH - DCV COV.	2
90	942487300	MTG ANGLE WELD'T RH - DCV COV.	2
91	94320052	MUD FLAP 920-940 RUBBER	2
92	945770002	6AT2(6T90S-8MJ) HCL 48	2
93	945770003	6AT2(6T90L-8MJ) 24 HYD	4
94	946210500	TUBE, FRONT MTG WELD'T	1
95	946770003	HOSE ASSEMBLY - 8MJ-8MJ X 45	4
96	946770006	HOSE ASSEMBLY - 62	2
97	946770007	HOSE ASSEMBLY - 79	2
98	946770009	HOSE ASSEMBLY - 104	2
99	948570000	5x5 LIFT BAR ASSEMBLY 948 XHD	1
100	HA293	FITTING-ADPTR SWV RUN	1

09008490, BUA V70 2-WINCH REAR OUTRIGGER (cont'd)

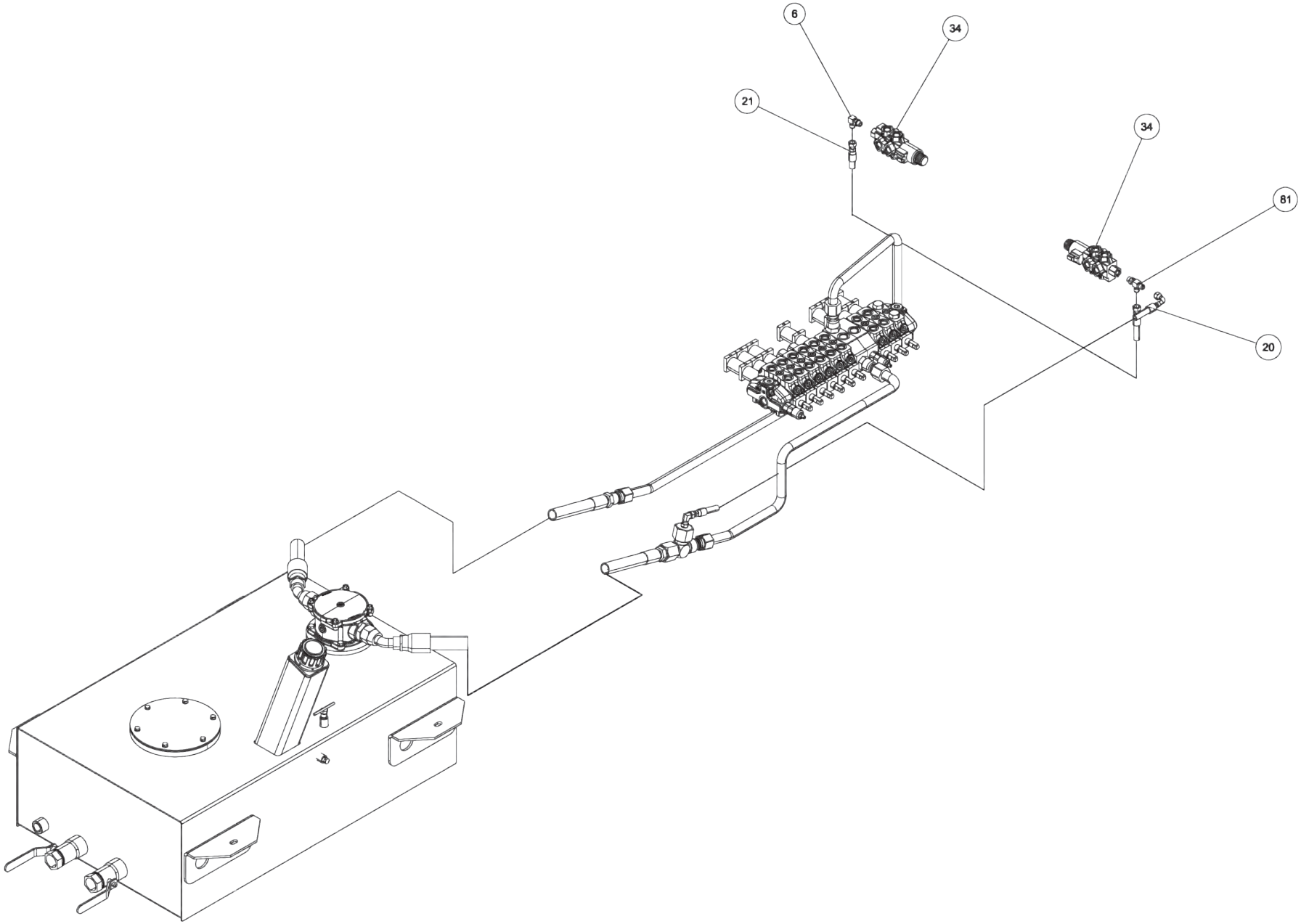

09008490, BUA V70 2-WINCH REAR OUTRIGGER (cont'd)

ITEM	PART NUMBER	DESCRIPTION	QTY
--	09008490	BUA V70 2W REAR OUTRIGGER	
1	0300044	FITT, HYD CONN. 6MJ-8MB	4
2	0300341	KNOB, BLACK (BLANK)	12
3	0300364	CLAMP-HOSE,0.875"-2.75" 50"LBS	8
4	0301470	FITTING, 90ELB 6MJ-8MB90	4
5	0301473	HOSE HYD, 18" LG	4
6	0301620	FITTING, HYD. 6MJ - 6MB90	5
7	0301696	FITTING, ELB 90 DEG 6MJ-6FJX90	5
8	0301895	GREASE FITTING, 1/8 STR PTF	2
9	0301909	RECEPTACLE BOOT	1
10	0301946	FITTING, BLKHD CONNECT	3
11	0301947	FITTING, 45 DEG ADAPTER	1
12	0301948	HD 7 WAY TRAILER CONNECT	1
13	0301959	SNAP RING-INTERNAL 1-1/2	4
14	0301998	HOSE HYD, 24" LG	4
15	0302205	GAUGE, FLUSH MNTG-6000 PSI	4
16	0302534	FITTING, 45 DEG ELBOW	2
17	0302698	FITTING, HOSE BARB,1-1/4	2
18	0302901	HOSE HYD, 120" 12C12	2
19	0303017	FITTING, CONNECTOR	4
20	0303170	HOSE, HYD. 75"	1
21	0303185	HOSE HYD, 66" LG.	1
22	0303538	FITT, ADAPTER -BRASS 8FP-6MP	1
23	0303539	QUICK DISCONNECT 3/8 FPT	1
24	0303948	ELBOW, 12MJ-16MB90	2
25	0304363	QUICK DISCONNECT 1/2 FPT	2
26	0306539	HOSE BARB 20HOSE16MB90	2
27	0306983	FITT-MALE RUNTEE 1/4T-1/4NPT	1
28	0307216	LIGHT, AMBER LED RECT 5.25x3.3	2
29	0307525	HOSE, HYD ASSY 120" LGTH 90L	4
30	0307538	LIGHT, MRKR-RED LED 4.5 X 1.63	4
31	0307604	KNOB, RED LONG - SK0700-07	4
32	0307778	PLUG, FILLER	2
33	0310010	SUCTION HOSE,1-1/4ID x50 100R4	1
34	0310881	6 WAY DIVERTER VALVE-12V	2
35	0310944	LH 200 CB TDM ALM BDY '10 VULC	1
36	0310945	RH 200 CB TDM ALM BDY '10 VULC	1
37	0311355	HOBBS HOURMETER	1
38	0311502	LIGHT 6"OVAL CLEAR-AMBER LED	6
39	0311503	GROMMET, LIGHT 6" OVAL	6
40	0311508	LED RECT RED STOP-CLEAR-12/24V	4
41	0311510	LIGHT RECT 12V REVERSE REFLEX	2
42	0311511	GROMMET, TAIL LIGHT, RECTANGULAR	8
43	0311755	WATER SEPARATOR-MONNIER	1
44	0312622	FITTING, 16FJ-6MJ	1
45	04000381	SS BHSCS 1/4-20 X 1	16
46	0400070	SCREW, 1/4-20X1 HHC GR5	6
47	0400078	SCREW, 1/4-20X2 HHC GR5	4
48	0400128	SCREW, 3/8-16X1-1/4 FHS GR8 BO	24
49	0400367	NUT, 1/4-20 LOK	4
50	0400369	NUT, 1/4 SPR J	8

ITEM	PART NUMBER	DESCRIPTION	QTY
51	0400393	NUT, 3/8-16 JAM	16
52	0400451	WASHER, 1/4	6
53	0400454	WASHER, 1/4 SS	22
54	0400491	LKWASHER, 1/2	14
55	0400498	WASHER, 1/2X2X0.125	14
56	0400687	SCREW, 10-24X3/4 PRH SS	4
57	0400816	WASHER, M10 SS	4
58	0401054	SCREW, 8-32X3/4 PRH SS	12
59	0402002	NUT, 8-32 LOK EXT SS	12
60	0402020	SCREW, 1/4-20X3/4 HHC SS	2
61	0402021	SCREW, 1/4-20X1 HHC SS	2
62	0402043	SCREW, 3/8-16X1-1/4 HHC SS	8
63	0402111	LKWASHER, 1/4 SS	18
64	0402113	NUT, 1/4-20 LOK SS	2
65	0402120	WASHER, 3/8 SS	16
66	0402121	LKWASHER, 3/8 SS	8
67	0402122	NUT, 3/8-16 HEX SS	8
68	0724476	PAD - NYLATRON - BBOM GUIDE	4
69	0724500	PIN - LOWER JACK LEG CYL	2
70	0726593	APNL-DCV LWR CTL PNL, 3 WINCH	2
71	0726594	APNL-DCV UPR LH CTL PNL,3WNCH	1
72	0726595	APNL-DCV UPR RH CTL PNL,3WNCH	1
73	0910787	STINGER ASSY - EURO - 144"	1
74	0911010	RECOVERY BOOM INSTALL V-70	1
75	0911120	LH REAR OUTRIGGER ASSY	1
76	0911121	RH REAR OUTRIGGER ASSY	1
77	0911804	AIR REGULATOR-GAUGE ASSEMBLY	2
78	0912015	SUBFRAME ASSY V70-100 STDWINCH	1
79	9010520	FITTING-ELBOW 1/4T-1/4NPT	2
80	9011053	FITTING, BRASS 1/4 TUBE-1/4 MP	1
81	9012594	FITT,HYD RUN TEE, 6MJx6MBx6MJ	1
82	9016815	MUNCIE PUMP TSPKS17-17-2BSSB	1
83	9024041	SWITCH, ROCKER SPST RED 12V21A	11
84	9041403	1/2 NC X 1 1/2 HHCS PL GR8	14
85	916770001	HOSE- HYD. 3/8 - 105" 8MJ-6MFA	2
86	920400005	MUD FLAP BRACE PLATE	2
87	9402970	TOOLBOX MTG. PAD	14
88	942480011	PLATE,SLOT-SS REAR WASHER TBOX	14
89	942480300	MTG ANGLE WELD'T LH - DCV COV.	2
90	942487300	MTG ANGLE WELD'T RH - DCV COV.	2
91	94320052	MUD FLAP 920-940 RUBBER	2
92	945770002	6AT2(6T90S-8MJ) HCL 48	2
93	945770003	6AT2(6T90L-8MJ) 24 HYD	4
94	946210500	TUBE, FRONT MTG WELD'T	1
95	946770003	HOSE ASSEMBLY - 8MJ-8MJ X 45	4
96	946770006	HOSE ASSEMBLY - 62	2
97	946770007	HOSE ASSEMBLY - 79	2
98	946770009	HOSE ASSEMBLY - 104	2
99	948570000	5x5 LIFT BAR ASSEMBLY 948 XHD	1
100	HA293	FITTING-ADPTR SWV RUN	1

09008490, BUA V70 2-WINCH REAR OUTRIGGER (cont'd)

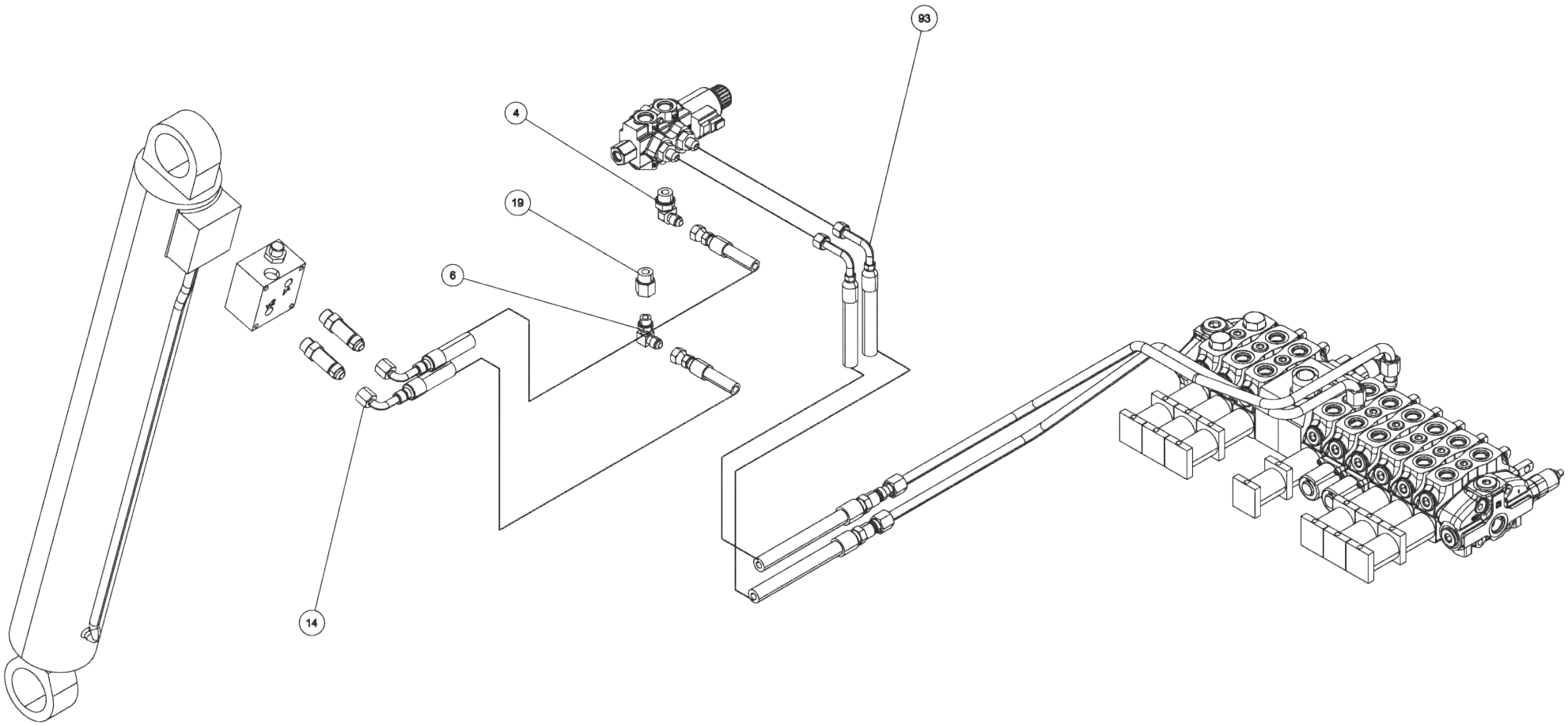

09008490, BUA V70 2-WINCH REAR OUTRIGGER (cont'd)

ITEM	PART NUMBER	DESCRIPTION	QTY
--	09008490	BUA V70 2W REAR OUTRIGGER	
1	0300044	FITT, HYD CONN. 6MJ-8MB	4
2	0300341	KNOB, BLACK (BLANK)	12
3	0300364	CLAMP-HOSE,0.875"-2.75" 50"LBS	8
4	0301470	FITTING, 90ELB 6MJ-8MB90	4
5	0301473	HOSE HYD, 18" LG	4
6	0301620	FITTING, HYD. 6MJ - 6MB90	5
7	0301696	FITTING, ELB 90 DEG 6MJ-6FJX90	5
8	0301895	GREASE FITTING, 1/8 STR PTF	2
9	0301909	RECEPTACLE BOOT	1
10	0301946	FITTING, BLKHD CONNECT	3
11	0301947	FITTING, 45 DEG ADAPTER	1
12	0301948	HD 7 WAY TRAILER CONNECT	1
13	0301959	SNAP RING-INTERNAL 1-1/2	4
14	0301998	HOSE HYD, 24" LG	4
15	0302205	GAUGE, FLUSH MNTG-6000 PSI	4
16	0302534	FITTING, 45 DEG ELBOW	2
17	0302698	FITTING, HOSE BARB,1-1/4	2
18	0302901	HOSE HYD, 120" 12C12	2
19	0303017	FITTING, CONNECTOR	4
20	0303170	HOSE, HYD. 75"	1
21	0303185	HOSE HYD, 66" LG.	1
22	0303538	FITT, ADAPTER -BRASS 8FP-6MP	1
23	0303539	QUICK DISCONNECT 3/8 FPT	1
24	0303948	ELBOW, 12MJ-16MB90	2
25	0304363	QUICK DISCONNECT 1/2 FPT	2
26	0306539	HOSE BARB 20HOSE16MB90	2
27	0306983	FITT-MALE RUNTEE 1/4T-1/4NPT	1
28	0307216	LIGHT, AMBER LED RECT 5.25x3.3	2
29	0307525	HOSE, HYD ASSY 120" LGTH 90L	4
30	0307538	LIGHT, MRKR-RED LED 4.5 X 1.63	4
31	0307604	KNOB, RED LONG - SK0700-07	4
32	0307778	PLUG, FILLER	2
33	0310010	SUCTION HOSE,1-1/4ID x50 100R4	1
34	0310881	6 WAY DIVERTER VALVE-12V	2
35	0310944	LH 200 CB TDM ALM BDY '10 VULC	1
36	0310945	RH 200 CB TDM ALM BDY '10 VULC	1
37	0311355	HOBBS HOURMETER	1
38	0311502	LIGHT 6"OVAL CLEAR-AMBER LED	6
39	0311503	GROMMET, LIGHT 6" OVAL	6
40	0311508	LED RECT RED STOP-CLEAR-12/24V	4
41	0311510	LIGHT RECT 12V REVERSE REFLEX	2
42	0311511	GROMMET, TAIL LIGHT, RECTANGULAR	8
43	0311755	WATER SEPARATOR-MONNIER	1
44	0312622	FITTING, 16FJ-6MJ	1
45	04000381	SS BHSCS 1/4-20 X 1	16
46	0400070	SCREW, 1/4-20X1 HHC GR5	6
47	0400078	SCREW, 1/4-20X2 HHC GR5	4
48	0400128	SCREW, 3/8-16X1-1/4 FHS GR8 BO	24
49	0400367	NUT, 1/4-20 LOK	4
50	0400369	NUT, 1/4 SPR J	8

ITEM	PART NUMBER	DESCRIPTION	QTY
51	0400393	NUT, 3/8-16 JAM	16
52	0400451	WASHER, 1/4	6
53	0400454	WASHER, 1/4 SS	22
54	0400491	LKWASHER, 1/2	14
55	0400498	WASHER, 1/2X2X0.125	14
56	0400687	SCREW, 10-24X3/4 PRH SS	4
57	0400816	WASHER, M10 SS	4
58	0401054	SCREW, 8-32X3/4 PRH SS	12
59	0402002	NUT, 8-32 LOK EXT SS	12
60	0402020	SCREW, 1/4-20X3/4 HHC SS	2
61	0402021	SCREW, 1/4-20X1 HHC SS	2
62	0402043	SCREW, 3/8-16X1-1/4 HHC SS	8
63	0402111	LKWASHER, 1/4 SS	18
64	0402113	NUT, 1/4-20 LOK SS	2
65	0402120	WASHER, 3/8 SS	16
66	0402121	LKWASHER, 3/8 SS	8
67	0402122	NUT, 3/8-16 HEX SS	8
68	0724476	PAD - NYLATRON - BBOM GUIDE	4
69	0724500	PIN - LOWER JACK LEG CYL	2
70	0726593	APNL-DCV LWR CTL PNL, 3 WINCH	2
71	0726594	APNL-DCV UPR LH CTL PNL,3WNCH	1
72	0726595	APNL-DCV UPR RH CTL PNL,3WNCH	1
73	0910787	STINGER ASSY - EURO - 144"	1
74	0911010	RECOVERY BOOM INSTALL V-70	1
75	0911120	LH REAR OUTRIGGER ASSY	1
76	0911121	RH REAR OUTRIGGER ASSY	1
77	0911804	AIR REGULATOR-GAUGE ASSEMBLY	2
78	0912015	SUBFRAME ASSY V70-100 STDWINCH	1
79	9010520	FITTING-ELBOW 1/4T-1/4NPT	2
80	9011053	FITTING, BRASS 1/4 TUBE-1/4 MP	1
81	9012594	FITT,HYD RUN TEE, 6MJx6MBx6MJ	1
82	9016815	MUNCIE PUMP TSPKS17-17-2BSSB	1
83	9024041	SWITCH, ROCKER SPST RED 12V21A	11
84	9041403	1/2 NC X 1 1/2 HHCS PL GR8	14
85	916770001	HOSE- HYD. 3/8 - 105" 8MJ-6MFA	2
86	920400005	MUD FLAP BRACE PLATE	2
87	9402970	TOOLBOX MTG. PAD	14
88	942480011	PLATE,SLOT-SS REAR WASHER TBOX	14
89	942480300	MTG ANGLE WELD'T LH - DCV COV.	2
90	942487300	MTG ANGLE WELD'T RH - DCV COV.	2
91	94320052	MUD FLAP 920-940 RUBBER	2
92	945770002	6AT2(6T90S-8MJ) HCL 48	2
93	945770003	6AT2(6T90L-8MJ) 24 HYD	4
94	946210500	TUBE, FRONT MTG WELD'T	1
95	946770003	HOSE ASSEMBLY - 8MJ-8MJ X 45	4
96	946770006	HOSE ASSEMBLY - 62	2
97	946770007	HOSE ASSEMBLY - 79	2
98	946770009	HOSE ASSEMBLY - 104	2
99	948570000	5x5 LIFT BAR ASSEMBLY 948 XHD	1
100	HA293	FITTING-ADPTR SWV RUN	1

09008490, BUA V70 2-WINCH REAR OUTRIGGER (cont'd)

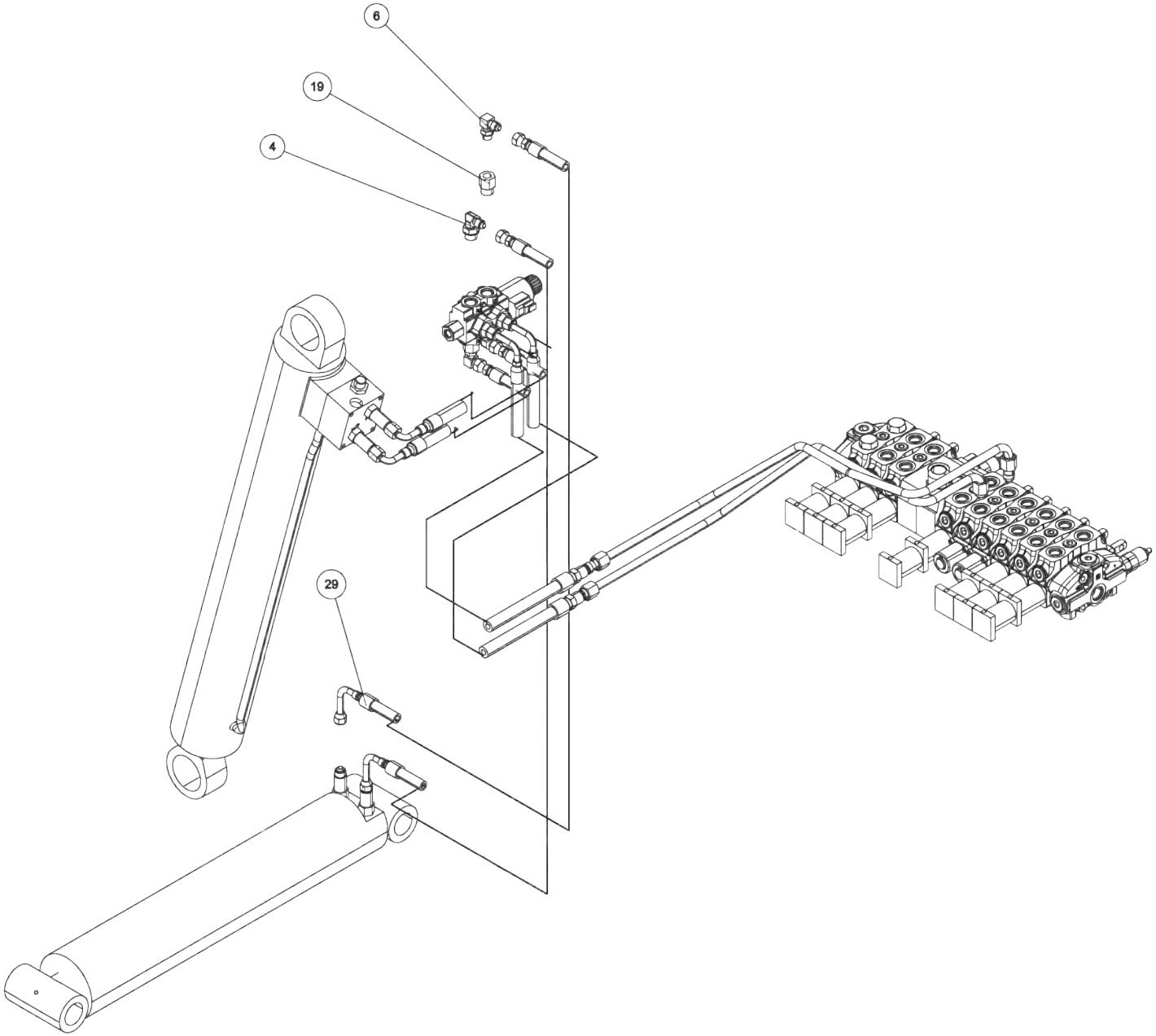

09008490, BUA V70 2-WINCH REAR OUTRIGGER (cont'd)

ITEM	PART NUMBER	DESCRIPTION	QTY
--	09008490	BUA V70 2W REAR OUTRIGGER	
1	0300044	FITT, HYD CONN. 6MJ-8MB	4
2	0300341	KNOB, BLACK (BLANK)	12
3	0300364	CLAMP-HOSE,0.875"-2.75" 50"LBS	8
4	0301470	FITTING, 90ELB 6MJ-8MB90	4
5	0301473	HOSE HYD, 18" LG	4
6	0301620	FITTING, HYD. 6MJ - 6MB90	5
7	0301696	FITTING, ELB 90 DEG 6MJ-6FJX90	5
8	0301895	GREASE FITTING, 1/8 STR PTF	2
9	0301909	RECEPTACLE BOOT	1
10	0301946	FITTING, BLKHD CONNECT	3
11	0301947	FITTING, 45 DEG ADAPTER	1
12	0301948	HD 7 WAY TRAILER CONNECT	1
13	0301959	SNAP RING-INTERNAL 1-1/2	4
14	0301998	HOSE HYD, 24" LG	4
15	0302205	GAUGE, FLUSH MNTG-6000 PSI	4
16	0302534	FITTING, 45 DEG ELBOW	2
17	0302698	FITTING, HOSE BARB,1-1/4	2
18	0302901	HOSE HYD, 120" 12C12	2
19	0303017	FITTING, CONNECTOR	4
20	0303170	HOSE, HYD. 75"	1
21	0303185	HOSE HYD, 66" LG.	1
22	0303538	FITT, ADAPTER -BRASS 8FP-6MP	1
23	0303539	QUICK DISCONNECT 3/8 FPT	1
24	0303948	ELBOW, 12MJ-16MB90	2
25	0304363	QUICK DISCONNECT 1/2 FPT	2
26	0306539	HOSE BARB 20HOSE16MB90	2
27	0306983	FITT-MALE RUNTEE 1/4T-1/4NPT	1
28	0307216	LIGHT, AMBER LED RECT 5.25x3.3	2
29	0307525	HOSE, HYD ASSY 120" LGTH 90L	4
30	0307538	LIGHT, MRKR-RED LED 4.5 X 1.63	4
31	0307604	KNOB, RED LONG - SK0700-07	4
32	0307778	PLUG, FILLER	2
33	0310010	SUCTION HOSE,1-1/4ID x50 100R4	1
34	0310881	6 WAY DIVERTER VALVE-12V	2
35	0310944	LH 200 CB TDM ALM BDY '10 VULC	1
36	0310945	RH 200 CB TDM ALM BDY '10 VULC	1
37	0311355	HOBBS HOURMETER	1
38	0311502	LIGHT 6"OVAL CLEAR-AMBER LED	6
39	0311503	GROMMET, LIGHT 6" OVAL	6
40	0311508	LED RECT RED STOP-CLEAR-12/24V	4
41	0311510	LIGHT RECT 12V REVERSE REFLEX	2
42	0311511	GROMMET, TAIL LIGHT, RECTANGULAR	8
43	0311755	WATER SEPARATOR-MONNIER	1
44	0312622	FITTING, 16FJ-6MJ	1
45	04000381	SS BHSCS 1/4-20 X 1	16
46	0400070	SCREW, 1/4-20X1 HHC GR5	6
47	0400078	SCREW, 1/4-20X2 HHC GR5	4
48	0400128	SCREW, 3/8-16X1-1/4 FHS GR8 BO	24
49	0400367	NUT, 1/4-20 LOK	4
50	0400369	NUT, 1/4 SPR J	8

ITEM	PART NUMBER	DESCRIPTION	QTY
51	0400393	NUT, 3/8-16 JAM	16
52	0400451	WASHER, 1/4	6
53	0400454	WASHER, 1/4 SS	22
54	0400491	LKWASHER, 1/2	14
55	0400498	WASHER, 1/2X2X0.125	14
56	0400687	SCREW, 10-24X3/4 PRH SS	4
57	0400816	WASHER, M10 SS	4
58	0401054	SCREW, 8-32X3/4 PRH SS	12
59	0402002	NUT, 8-32 LOK EXT SS	12
60	0402020	SCREW, 1/4-20X3/4 HHC SS	2
61	0402021	SCREW, 1/4-20X1 HHC SS	2
62	0402043	SCREW, 3/8-16X1-1/4 HHC SS	8
63	0402111	LKWASHER, 1/4 SS	18
64	0402113	NUT, 1/4-20 LOK SS	2
65	0402120	WASHER, 3/8 SS	16
66	0402121	LKWASHER, 3/8 SS	8
67	0402122	NUT, 3/8-16 HEX SS	8
68	0724476	PAD - NYLATRON - BBOM GUIDE	4
69	0724500	PIN - LOWER JACK LEG CYL	2
70	0726593	APNL-DCV LWR CTL PNL, 3 WINCH	2
71	0726594	APNL-DCV UPR LH CTL PNL,3WNCH	1
72	0726595	APNL-DCV UPR RH CTL PNL,3WNCH	1
73	0910787	STINGER ASSY - EURO - 144"	1
74	0911010	RECOVERY BOOM INSTALL V-70	1
75	0911120	LH REAR OUTRIGGER ASSY	1
76	0911121	RH REAR OUTRIGGER ASSY	1
77	0911804	AIR REGULATOR-GAUGE ASSEMBLY	2
78	0912015	SUBFRAME ASSY V70-100 STDWINCH	1
79	9010520	FITTING-ELBOW 1/4T-1/4NPT	2
80	9011053	FITTING, BRASS 1/4 TUBE-1/4 MP	1
81	9012594	FITT,HYD RUN TEE, 6MJx6MBx6MJ	1
82	9016815	MUNCIE PUMP TSPKS17-17-2BSSB	1
83	9024041	SWITCH, ROCKER SPST RED 12V21A	11
84	9041403	1/2 NC X 1 1/2 HHCS PL GR8	14
85	916770001	HOSE- HYD. 3/8 - 105" 8MJ-6MFA	2
86	920400005	MUD FLAP BRACE PLATE	2
87	9402970	TOOLBOX MTG. PAD	14
88	942480011	PLATE,SLOT-SS REAR WASHER TBOX	14
89	942480300	MTG ANGLE WELD'T LH - DCV COV.	2
90	942487300	MTG ANGLE WELD'T RH - DCV COV.	2
91	94320052	MUD FLAP 920-940 RUBBER	2
92	945770002	6AT2(6T90S-8MJ) HCL 48	2
93	945770003	6AT2(6T90L-8MJ) 24 HYD	4
94	946210500	TUBE, FRONT MTG WELD'T	1
95	946770003	HOSE ASSEMBLY - 8MJ-8MJ X 45	4
96	946770006	HOSE ASSEMBLY - 62	2
97	946770007	HOSE ASSEMBLY - 79	2
98	946770009	HOSE ASSEMBLY - 104	2
99	948570000	5x5 LIFT BAR ASSEMBLY 948 XHD	1
100	HA293	FITTING-ADPTR SWV RUN	1

09008490, BUA V70 2-WINCH REAR OUTRIGGER (cont'd)

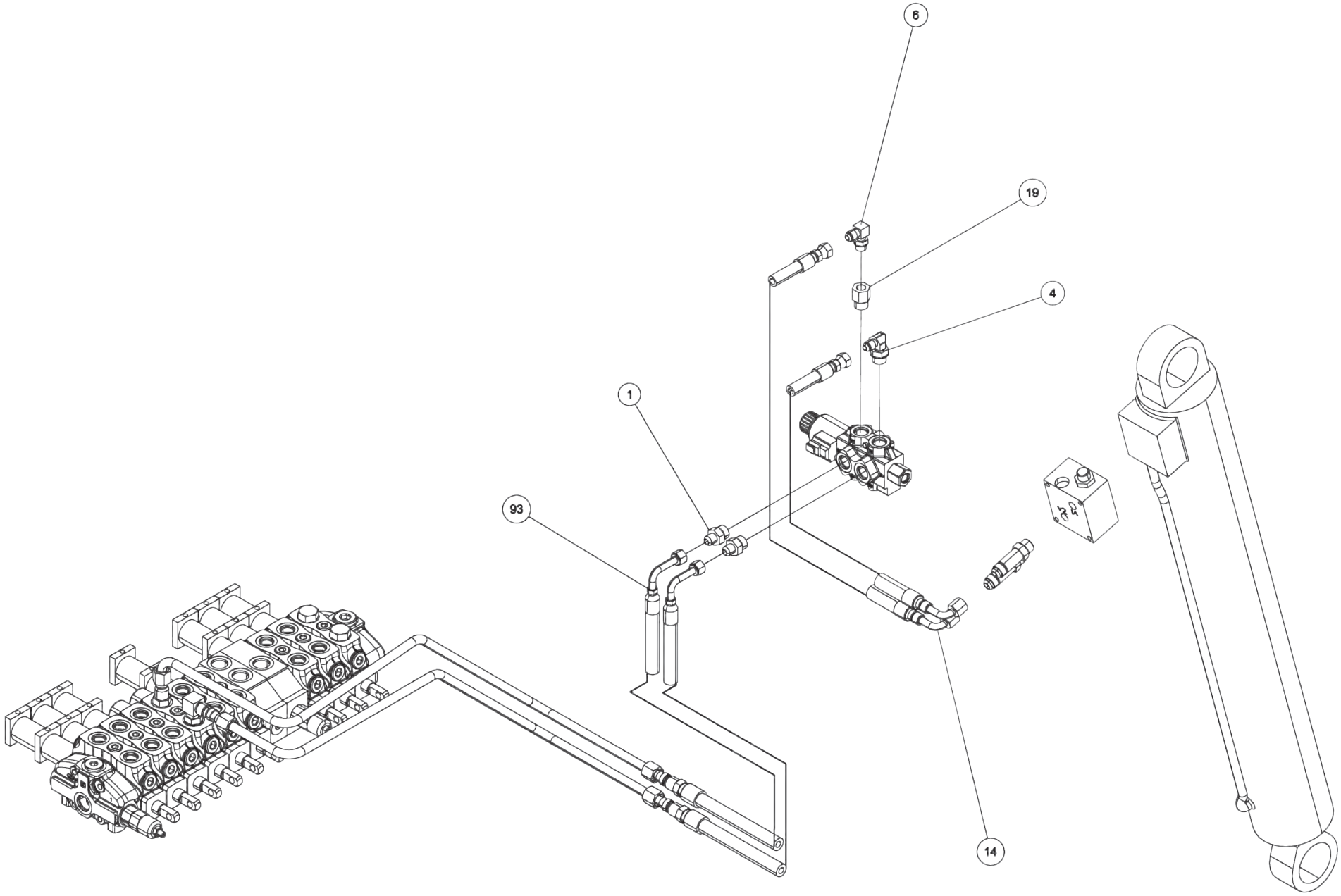

09008490, BUA V70 2-WINCH REAR OUTRIGGER (cont'd)

ITEM	PART NUMBER	DESCRIPTION	QTY
--	09008490	BUA V70 2W REAR OUTRIGGER	
1	0300044	FITT, HYD CONN. 6MJ-8MB	4
2	0300341	KNOB, BLACK (BLANK)	12
3	0300364	CLAMP-HOSE,0.875"-2.75" 50"LBS	8
4	0301470	FITTING, 90ELB 6MJ-8MB90	4
5	0301473	HOSE HYD, 18" LG	4
6	0301620	FITTING, HYD. 6MJ - 6MB90	5
7	0301696	FITTING, ELB 90 DEG 6MJ-6FJX90	5
8	0301895	GREASE FITTING, 1/8 STR PTF	2
9	0301909	RECEPTACLE BOOT	1
10	0301946	FITTING, BLKHD CONNECT	3
11	0301947	FITTING, 45 DEG ADAPTER	1
12	0301948	HD 7 WAY TRAILER CONNECT	1
13	0301959	SNAP RING-INTERNAL 1-1/2	4
14	0301998	HOSE HYD, 24" LG	4
15	0302205	GAUGE, FLUSH MNTG-6000 PSI	4
16	0302534	FITTING, 45 DEG ELBOW	2
17	0302698	FITTING, HOSE BARB,1-1/4	2
18	0302901	HOSE HYD, 120" 12C12	2
19	0303017	FITTING, CONNECTOR	4
20	0303170	HOSE, HYD. 75"	1
21	0303185	HOSE HYD, 66" LG.	1
22	0303538	FITT, ADAPTER -BRASS 8FP-6MP	1
23	0303539	QUICK DISCONNECT 3/8 FPT	1
24	0303948	ELBOW, 12MJ-16MB90	2
25	0304363	QUICK DISCONNECT 1/2 FPT	2
26	0306539	HOSE BARB 20HOSE16MB90	2
27	0306983	FITT-MALE RUNTEE 1/4T-1/4NPT	1
28	0307216	LIGHT, AMBER LED RECT 5.25x3.3	2
29	0307525	HOSE, HYD ASSY 120" LGTH 90L	4
30	0307538	LIGHT, MRKR-RED LED 4.5 X 1.63	4
31	0307604	KNOB, RED LONG - SK0700-07	4
32	0307778	PLUG, FILLER	2
33	0310010	SUCTION HOSE,1-1/4ID x50 100R4	1
34	0310881	6 WAY DIVERTER VALVE-12V	2
35	0310944	LH 200 CB TDM ALM BDY '10 VULC	1
36	0310945	RH 200 CB TDM ALM BDY '10 VULC	1
37	0311355	HOBBS HOURMETER	1
38	0311502	LIGHT 6"OVAL CLEAR-AMBER LED	6
39	0311503	GROMMET, LIGHT 6" OVAL	6
40	0311508	LED RECT RED STOP-CLEAR-12/24V	4
41	0311510	LIGHT RECT 12V REVERSE REFLEX	2
42	0311511	GROMMET, TAIL LIGHT, RECTANGULAR	8
43	0311755	WATER SEPARATOR-MONNIER	1
44	0312622	FITTING, 16FJ-6MJ	1
45	04000381	SS BHSCS 1/4-20 X 1	16
46	0400070	SCREW, 1/4-20X1 HHC GR5	6
47	0400078	SCREW, 1/4-20X2 HHC GR5	4
48	0400128	SCREW, 3/8-16X1-1/4 FHS GR8 BO	24
49	0400367	NUT, 1/4-20 LOK	4
50	0400369	NUT, 1/4 SPR J	8

ITEM	PART NUMBER	DESCRIPTION	QTY
51	0400393	NUT, 3/8-16 JAM	16
52	0400451	WASHER, 1/4	6
53	0400454	WASHER, 1/4 SS	22
54	0400491	LKWASHER, 1/2	14
55	0400498	WASHER, 1/2X2X0.125	14
56	0400687	SCREW, 10-24X3/4 PRH SS	4
57	0400816	WASHER, M10 SS	4
58	0401054	SCREW, 8-32X3/4 PRH SS	12
59	0402002	NUT, 8-32 LOK EXT SS	12
60	0402020	SCREW, 1/4-20X3/4 HHC SS	2
61	0402021	SCREW, 1/4-20X1 HHC SS	2
62	0402043	SCREW, 3/8-16X1-1/4 HHC SS	8
63	0402111	LKWASHER, 1/4 SS	18
64	0402113	NUT, 1/4-20 LOK SS	2
65	0402120	WASHER, 3/8 SS	16
66	0402121	LKWASHER, 3/8 SS	8
67	0402122	NUT, 3/8-16 HEX SS	8
68	0724476	PAD - NYLATRON - BBOM GUIDE	4
69	0724500	PIN - LOWER JACK LEG CYL	2
70	0726593	APNL-DCV LWR CTL PNL, 3 WINCH	2
71	0726594	APNL-DCV UPR LH CTL PNL,3WNCH	1
72	0726595	APNL-DCV UPR RH CTL PNL,3WNCH	1
73	0910787	STINGER ASSY - EURO - 144"	1
74	0911010	RECOVERY BOOM INSTALL V-70	1
75	0911120	LH REAR OUTRIGGER ASSY	1
76	0911121	RH REAR OUTRIGGER ASSY	1
77	0911804	AIR REGULATOR-GAUGE ASSEMBLY	2
78	0912015	SUBFRAME ASSY V70-100 STDWINCH	1
79	9010520	FITTING-ELBOW 1/4T-1/4NPT	2
80	9011053	FITTING, BRASS 1/4 TUBE-1/4 MP	1
81	9012594	FITT,HYD RUN TEE, 6MJx6MBx6MJ	1
82	9016815	MUNCIE PUMP TSPKS17-17-2BSSB	1
83	9024041	SWITCH, ROCKER SPST RED 12V21A	11
84	9041403	1/2 NC X 1 1/2 HHCS PL GR8	14
85	916770001	HOSE- HYD. 3/8 - 105" 8MJ-6MFA	2
86	920400005	MUD FLAP BRACE PLATE	2
87	9402970	TOOLBOX MTG. PAD	14
88	942480011	PLATE,SLOT-SS REAR WASHER TBOX	14
89	942480300	MTG ANGLE WELD'T LH - DCV COV.	2
90	942487300	MTG ANGLE WELD'T RH - DCV COV.	2
91	94320052	MUD FLAP 920-940 RUBBER	2
92	945770002	6AT2(6T90S-8MJ) HCL 48	2
93	945770003	6AT2(6T90L-8MJ) 24 HYD	4
94	946210500	TUBE, FRONT MTG WELD'T	1
95	946770003	HOSE ASSEMBLY - 8MJ-8MJ X 45	4
96	946770006	HOSE ASSEMBLY - 62	2
97	946770007	HOSE ASSEMBLY - 79	2
98	946770009	HOSE ASSEMBLY - 104	2
99	948570000	5x5 LIFT BAR ASSEMBLY 948 XHD	1
100	HA293	FITTING-ADPTR SWV RUN	1

09008490, BUA V70 2-WINCH REAR OUTRIGGER (cont'd)

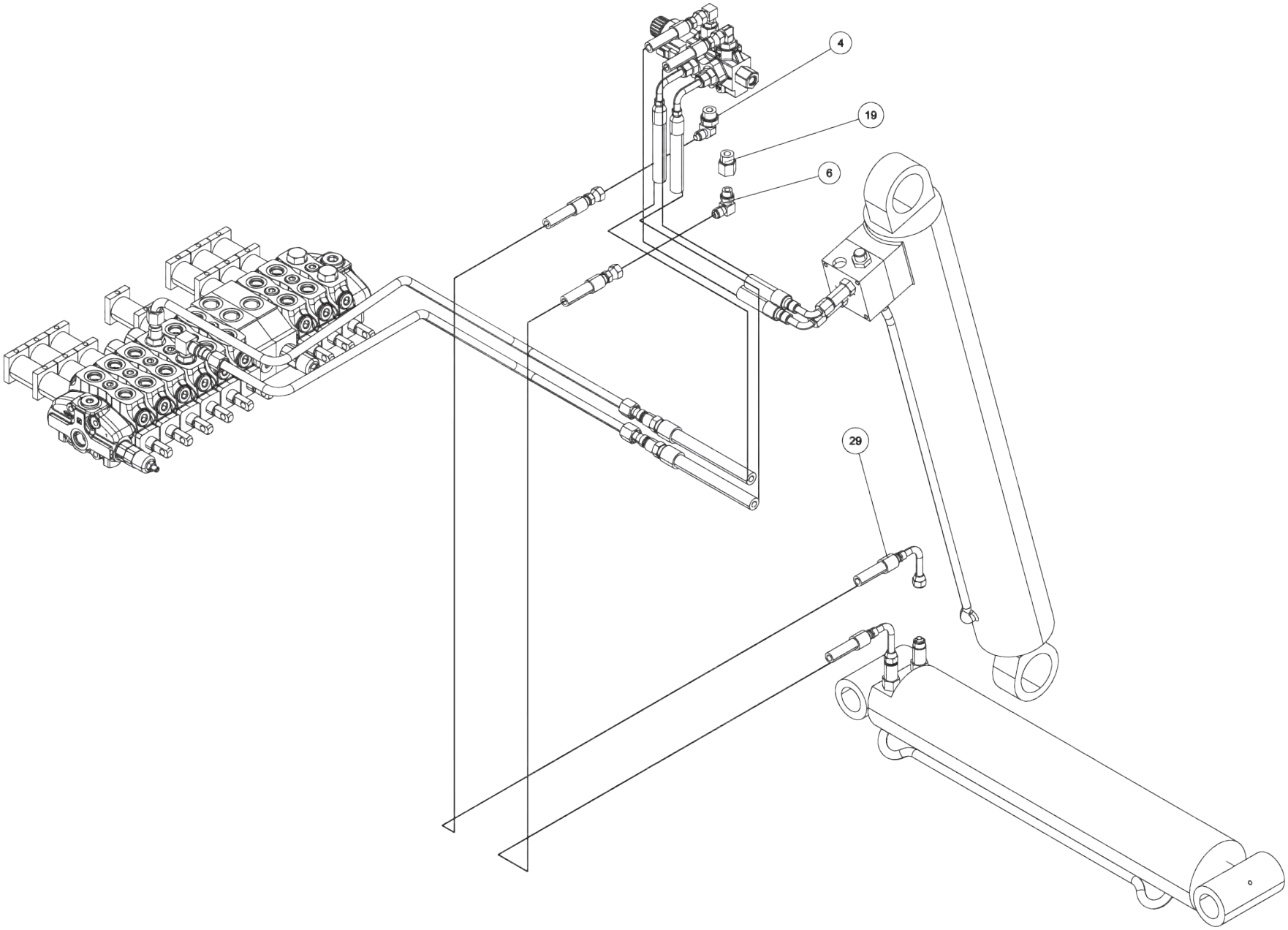

09008490, BUA V70 2-WINCH REAR OUTRIGGER (cont'd)

ITEM	PART NUMBER	DESCRIPTION	QTY
--	09008490	BUA V70 2W REAR OUTRIGGER	
1	0300044	FITT, HYD CONN. 6MJ-8MB	4
2	0300341	KNOB, BLACK (BLANK)	12
3	0300364	CLAMP-HOSE,0.875"-2.75" 50"LBS	8
4	0301470	FITTING, 90ELB 6MJ-8MB90	4
5	0301473	HOSE HYD, 18" LG	4
6	0301620	FITTING, HYD. 6MJ - 6MB90	5
7	0301696	FITTING, ELB 90 DEG 6MJ-6FJX90	5
8	0301895	GREASE FITTING, 1/8 STR PTF	2
9	0301909	RECEPTACLE BOOT	1
10	0301946	FITTING, BLKHD CONNECT	3
11	0301947	FITTING, 45 DEG ADAPTER	1
12	0301948	HD 7 WAY TRAILER CONNECT	1
13	0301959	SNAP RING-INTERNAL 1-1/2	4
14	0301998	HOSE HYD, 24" LG	4
15	0302205	GAUGE, FLUSH MNTG-6000 PSI	4
16	0302534	FITTING, 45 DEG ELBOW	2
17	0302698	FITTING, HOSE BARB,1-1/4	2
18	0302901	HOSE HYD, 120" 12C12	2
19	0303017	FITTING, CONNECTOR	4
20	0303170	HOSE, HYD. 75"	1
21	0303185	HOSE HYD, 66" LG.	1
22	0303538	FITT, ADAPTER -BRASS 8FP-6MP	1
23	0303539	QUICK DISCONNECT 3/8 FPT	1
24	0303948	ELBOW, 12MJ-16MB90	2
25	0304363	QUICK DISCONNECT 1/2 FPT	2
26	0306539	HOSE BARB 20HOSE16MB90	2
27	0306983	FITT-MALE RUNTEE 1/4T-1/4NPT	1
28	0307216	LIGHT, AMBER LED RECT 5.25x3.3	2
29	0307525	HOSE, HYD ASSY 120" LGTH 90L	4
30	0307538	LIGHT, MRKR-RED LED 4.5 X 1.63	4
31	0307604	KNOB, RED LONG - SK0700-07	4
32	0307778	PLUG, FILLER	2
33	0310010	SUCTION HOSE,1-1/4ID x50 100R4	1
34	0310881	6 WAY DIVERTER VALVE-12V	2
35	0310944	LH 200 CB TDM ALM BDY '10 VULC	1
36	0310945	RH 200 CB TDM ALM BDY '10 VULC	1
37	0311355	HOBBS HOURMETER	1
38	0311502	LIGHT 6"OVAL CLEAR-AMBER LED	6
39	0311503	GROMMET, LIGHT 6" OVAL	6
40	0311508	LED RECT RED STOP-CLEAR-12/24V	4
41	0311510	LIGHT RECT 12V REVERSE REFLEX	2
42	0311511	GROMMET, TAIL LIGHT, RECTANGULAR	8
43	0311755	WATER SEPARATOR-MONNIER	1
44	0312622	FITTING, 16FJ-6MJ	1
45	04000381	SS BHSCS 1/4-20 X 1	16
46	0400070	SCREW, 1/4-20X1 HHC GR5	6
47	0400078	SCREW, 1/4-20X2 HHC GR5	4
48	0400128	SCREW, 3/8-16X1-1/4 FHS GR8 BO	24
49	0400367	NUT, 1/4-20 LOK	4
50	0400369	NUT, 1/4 SPR J	8

ITEM	PART NUMBER	DESCRIPTION	QTY
51	0400393	NUT, 3/8-16 JAM	16
52	0400451	WASHER, 1/4	6
53	0400454	WASHER, 1/4 SS	22
54	0400491	LKWASHER, 1/2	14
55	0400498	WASHER, 1/2X2X0.125	14
56	0400687	SCREW, 10-24X3/4 PRH SS	4
57	0400816	WASHER, M10 SS	4
58	0401054	SCREW, 8-32X3/4 PRH SS	12
59	0402002	NUT, 8-32 LOK EXT SS	12
60	0402020	SCREW, 1/4-20X3/4 HHC SS	2
61	0402021	SCREW, 1/4-20X1 HHC SS	2
62	0402043	SCREW, 3/8-16X1-1/4 HHC SS	8
63	0402111	LKWASHER, 1/4 SS	18
64	0402113	NUT, 1/4-20 LOK SS	2
65	0402120	WASHER, 3/8 SS	16
66	0402121	LKWASHER, 3/8 SS	8
67	0402122	NUT, 3/8-16 HEX SS	8
68	0724476	PAD - NYLATRON - BBOM GUIDE	4
69	0724500	PIN - LOWER JACK LEG CYL	2
70	0726593	APNL-DCV LWR CTL PNL, 3 WINCH	2
71	0726594	APNL-DCV UPR LH CTL PNL,3WNCH	1
72	0726595	APNL-DCV UPR RH CTL PNL,3WNCH	1
73	0910787	STINGER ASSY - EURO - 144"	1
74	0911010	RECOVERY BOOM INSTALL V-70	1
75	0911120	LH REAR OUTRIGGER ASSY	1
76	0911121	RH REAR OUTRIGGER ASSY	1
77	0911804	AIR REGULATOR-GAUGE ASSEMBLY	2
78	0912015	SUBFRAME ASSY V70-100 STDWINCH	1
79	9010520	FITTING-ELBOW 1/4T-1/4NPT	2
80	9011053	FITTING, BRASS 1/4 TUBE-1/4 MP	1
81	9012594	FITT,HYD RUN TEE, 6MJx6MBx6MJ	1
82	9016815	MUNCIE PUMP TSPKS17-17-2BSSB	1
83	9024041	SWITCH, ROCKER SPST RED 12V21A	11
84	9041403	1/2 NC X 1 1/2 HHCS PL GR8	14
85	916770001	HOSE- HYD. 3/8 - 105" 8MJ-6MFA	2
86	920400005	MUD FLAP BRACE PLATE	2
87	9402970	TOOLBOX MTG. PAD	14
88	942480011	PLATE,SLOT-SS REAR WASHER TBOX	14
89	942480300	MTG ANGLE WELD'T LH - DCV COV.	2
90	942487300	MTG ANGLE WELD'T RH - DCV COV.	2
91	94320052	MUD FLAP 920-940 RUBBER	2
92	945770002	6AT2(6T90S-8MJ) HCL 48	2
93	945770003	6AT2(6T90L-8MJ) 24 HYD	4
94	946210500	TUBE, FRONT MTG WELD'T	1
95	946770003	HOSE ASSEMBLY - 8MJ-8MJ X 45	4
96	946770006	HOSE ASSEMBLY - 62	2
97	946770007	HOSE ASSEMBLY - 79	2
98	946770009	HOSE ASSEMBLY - 104	2
99	948570000	5x5 LIFT BAR ASSEMBLY 948 XHD	1
100	HA293	FITTING-ADPTR SWV RUN	1

09008490, BUA V70 2-WINCH REAR OUTRIGGER (cont'd)

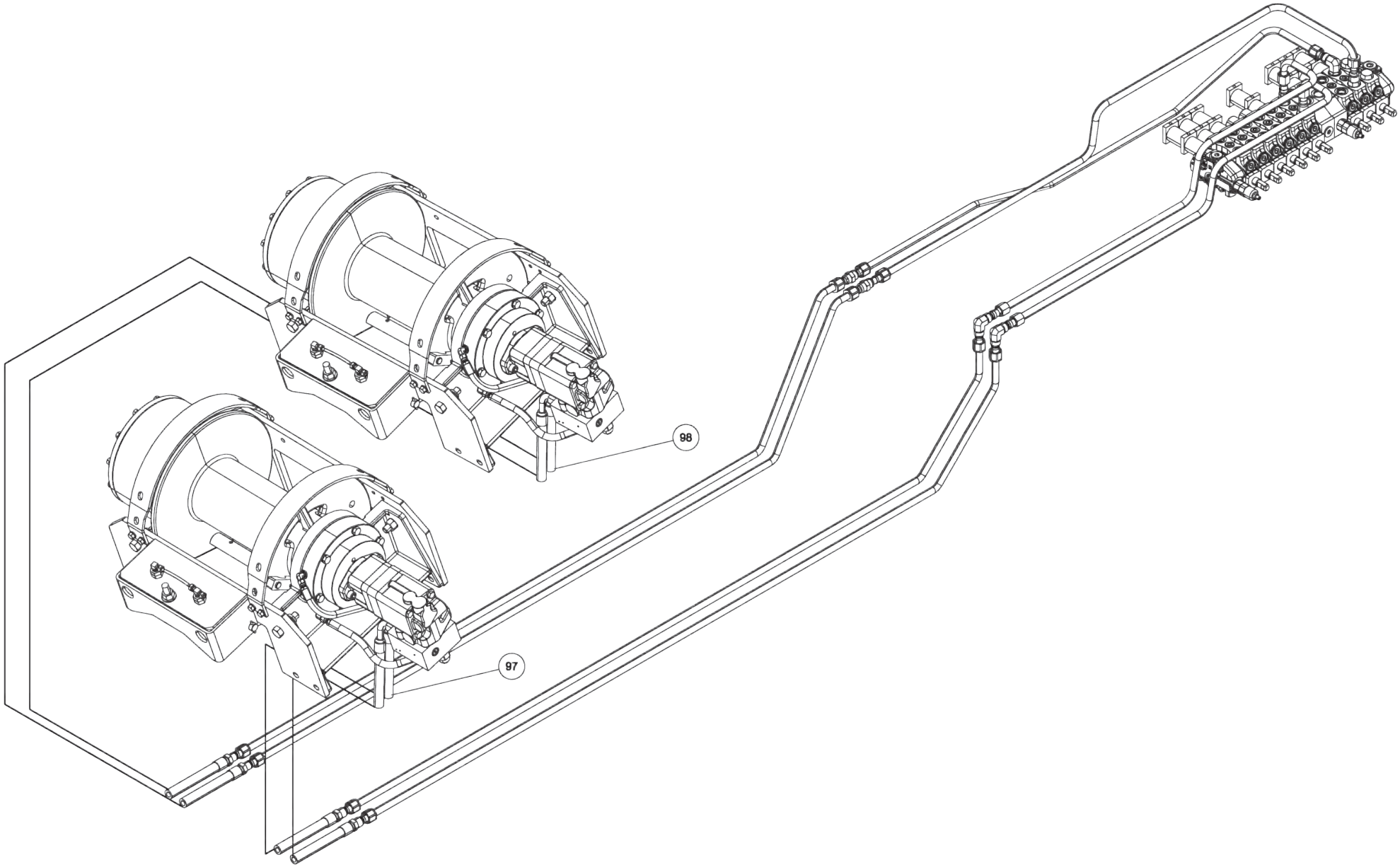

09008490, BUA V70 2-WINCH REAR OUTRIGGER (cont'd)

ITEM	PART NUMBER	DESCRIPTION	QTY
--	09008490	BUA V70 2W REAR OUTRIGGER	
1	0300044	FITT, HYD CONN. 6MJ-8MB	4
2	0300341	KNOB, BLACK (BLANK)	12
3	0300364	CLAMP-HOSE,0.875"-2.75" 50"LBS	8
4	0301470	FITTING, 90ELB 6MJ-8MB90	4
5	0301473	HOSE HYD, 18" LG	4
6	0301620	FITTING, HYD. 6MJ - 6MB90	5
7	0301696	FITTING, ELB 90 DEG 6MJ-6FJX90	5
8	0301895	GREASE FITTING, 1/8 STR PTF	2
9	0301909	RECEPTACLE BOOT	1
10	0301946	FITTING, BLKHD CONNECT	3
11	0301947	FITTING, 45 DEG ADAPTER	1
12	0301948	HD 7 WAY TRAILER CONNECT	1
13	0301959	SNAP RING-INTERNAL 1-1/2	4
14	0301998	HOSE HYD, 24" LG	4
15	0302205	GAUGE, FLUSH MNTG-6000 PSI	4
16	0302534	FITTING, 45 DEG ELBOW	2
17	0302698	FITTING, HOSE BARB,1-1/4	2
18	0302901	HOSE HYD, 120" 12C12	2
19	0303017	FITTING, CONNECTOR	4
20	0303170	HOSE, HYD. 75"	1
21	0303185	HOSE HYD, 66" LG.	1
22	0303538	FITT, ADAPTER -BRASS 8FP-6MP	1
23	0303539	QUICK DISCONNECT 3/8 FPT	1
24	0303948	ELBOW, 12MJ-16MB90	2
25	0304363	QUICK DISCONNECT 1/2 FPT	2
26	0306539	HOSE BARB 20HOSE16MB90	2
27	0306983	FITT-MALE RUNTEE 1/4T-1/4NPT	1
28	0307216	LIGHT, AMBER LED RECT 5.25x3.3	2
29	0307525	HOSE, HYD ASSY 120" LGTH 90L	4
30	0307538	LIGHT, MRKR-RED LED 4.5 X 1.63	4
31	0307604	KNOB, RED LONG - SK0700-07	4
32	0307778	PLUG, FILLER	2
33	0310010	SUCTION HOSE,1-1/4ID x50 100R4	1
34	0310881	6 WAY DIVERTER VALVE-12V	2
35	0310944	LH 200 CB TDM ALM BDY '10 VULC	1
36	0310945	RH 200 CB TDM ALM BDY '10 VULC	1
37	0311355	HOBBS HOURMETER	1
38	0311502	LIGHT 6"OVAL CLEAR-AMBER LED	6
39	0311503	GROMMET, LIGHT 6" OVAL	6
40	0311508	LED RECT RED STOP-CLEAR-12/24V	4
41	0311510	LIGHT RECT 12V REVERSE REFLEX	2
42	0311511	GROMMET, TAIL LIGHT, RECTANGULAR	8
43	0311755	WATER SEPARATOR-MONNIER	1
44	0312622	FITTING, 16FJ-6MJ	1
45	04000381	SS BHSCS 1/4-20 X 1	16
46	0400070	SCREW, 1/4-20X1 HHC GR5	6
47	0400078	SCREW, 1/4-20X2 HHC GR5	4
48	0400128	SCREW, 3/8-16X1-1/4 FHS GR8 BO	24
49	0400367	NUT, 1/4-20 LOK	4
50	0400369	NUT, 1/4 SPR J	8

ITEM	PART NUMBER	DESCRIPTION	QTY
51	0400393	NUT, 3/8-16 JAM	16
52	0400451	WASHER, 1/4	6
53	0400454	WASHER, 1/4 SS	22
54	0400491	LKWASHER, 1/2	14
55	0400498	WASHER, 1/2X2X0.125	14
56	0400687	SCREW, 10-24X3/4 PRH SS	4
57	0400816	WASHER, M10 SS	4
58	0401054	SCREW, 8-32X3/4 PRH SS	12
59	0402002	NUT, 8-32 LOK EXT SS	12
60	0402020	SCREW, 1/4-20X3/4 HHC SS	2
61	0402021	SCREW, 1/4-20X1 HHC SS	2
62	0402043	SCREW, 3/8-16X1-1/4 HHC SS	8
63	0402111	LKWASHER, 1/4 SS	18
64	0402113	NUT, 1/4-20 LOK SS	2
65	0402120	WASHER, 3/8 SS	16
66	0402121	LKWASHER, 3/8 SS	8
67	0402122	NUT, 3/8-16 HEX SS	8
68	0724476	PAD - NYLATRON - BBOM GUIDE	4
69	0724500	PIN - LOWER JACK LEG CYL	2
70	0726593	APNL-DCV LWR CTL PNL, 3 WINCH	2
71	0726594	APNL-DCV UPR LH CTL PNL,3WNCH	1
72	0726595	APNL-DCV UPR RH CTL PNL,3WNCH	1
73	0910787	STINGER ASSY - EURO - 144"	1
74	0911010	RECOVERY BOOM INSTALL V-70	1
75	0911120	LH REAR OUTRIGGER ASSY	1
76	0911121	RH REAR OUTRIGGER ASSY	1
77	0911804	AIR REGULATOR-GAUGE ASSEMBLY	2
78	0912015	SUBFRAME ASSY V70-100 STDWINCH	1
79	9010520	FITTING-ELBOW 1/4T-1/4NPT	2
80	9011053	FITTING, BRASS 1/4 TUBE-1/4 MP	1
81	9012594	FITT,HYD RUN TEE, 6MJx6MBx6MJ	1
82	9016815	MUNCIE PUMP TSPKS17-17-2BSSB	1
83	9024041	SWITCH, ROCKER SPST RED 12V21A	11
84	9041403	1/2 NC X 1 1/2 HHCS PL GR8	14
85	916770001	HOSE- HYD. 3/8 - 105" 8MJ-6MFA	2
86	920400005	MUD FLAP BRACE PLATE	2
87	9402970	TOOLBOX MTG. PAD	14
88	942480011	PLATE,SLOT-SS REAR WASHER TBOX	14
89	942480300	MTG ANGLE WELD'T LH - DCV COV.	2
90	942487300	MTG ANGLE WELD'T RH - DCV COV.	2
91	94320052	MUD FLAP 920-940 RUBBER	2
92	945770002	6AT2(6T90S-8MJ) HCL 48	2
93	945770003	6AT2(6T90L-8MJ) 24 HYD	4
94	946210500	TUBE, FRONT MTG WELD'T	1
95	946770003	HOSE ASSEMBLY - 8MJ-8MJ X 45	4
96	946770006	HOSE ASSEMBLY - 62	2
97	946770007	HOSE ASSEMBLY - 79	2
98	946770009	HOSE ASSEMBLY - 104	2
99	948570000	5x5 LIFT BAR ASSEMBLY 948 XHD	1
100	HA293	FITTING-ADPTR SWV RUN	1

09008490, BUA V70 2-WINCH REAR OUTRIGGER (cont'd)

09008490, BUA V70 2-WINCH REAR OUTRIGGER (cont'd)

ITEM	PART NUMBER	DESCRIPTION	QTY
--	09008490	BUA V70 2W REAR OUTRIGGER	
1	0300044	FITT, HYD CONN. 6MJ-8MB	4
2	0300341	KNOB, BLACK (BLANK)	12
3	0300364	CLAMP-HOSE,0.875"-2.75" 50"LBS	8
4	0301470	FITTING, 90ELB 6MJ-8MB90	4
5	0301473	HOSE HYD, 18" LG	4
6	0301620	FITTING, HYD. 6MJ - 6MB90	5
7	0301696	FITTING, ELB 90 DEG 6MJ-6FJX90	5
8	0301895	GREASE FITTING, 1/8 STR PTF	2
9	0301909	RECEPTACLE BOOT	1
10	0301946	FITTING, BLKHD CONNECT	3
11	0301947	FITTING, 45 DEG ADAPTER	1
12	0301948	HD 7 WAY TRAILER CONNECT	1
13	0301959	SNAP RING-INTERNAL 1-1/2	4
14	0301998	HOSE HYD, 24" LG	4
15	0302205	GAUGE, FLUSH MNTG-6000 PSI	4
16	0302534	FITTING, 45 DEG ELBOW	2
17	0302698	FITTING, HOSE BARB,1-1/4	2
18	0302901	HOSE HYD, 120" 12C12	2
19	0303017	FITTING, CONNECTOR	4
20	0303170	HOSE, HYD. 75"	1
21	0303185	HOSE HYD, 66" LG.	1
22	0303538	FITT, ADAPTER -BRASS 8FP-6MP	1
23	0303539	QUICK DISCONNECT 3/8 FPT	1
24	0303948	ELBOW, 12MJ-16MB90	2
25	0304363	QUICK DISCONNECT 1/2 FPT	2
26	0306539	HOSE BARB 20HOSE16MB90	2
27	0306983	FITT-MALE RUNTEE 1/4T-1/4NPT	1
28	0307216	LIGHT, AMBER LED RECT 5.25x3.3	2
29	0307525	HOSE, HYD ASSY 120" LGTH 90L	4
30	0307538	LIGHT, MRKR-RED LED 4.5 X 1.63	4
31	0307604	KNOB, RED LONG - SK0700-07	4
32	0307778	PLUG, FILLER	2
33	0310010	SUCTION HOSE,1-1/4ID x50 100R4	1
34	0310881	6 WAY DIVERTER VALVE-12V	2
35	0310944	LH 200 CB TDM ALM BDY '10 VULC	1
36	0310945	RH 200 CB TDM ALM BDY '10 VULC	1
37	0311355	HOBBS HOURMETER	1
38	0311502	LIGHT 6"OVAL CLEAR-AMBER LED	6
39	0311503	GROMMET, LIGHT 6" OVAL	6
40	0311508	LED RECT RED STOP-CLEAR-12/24V	4
41	0311510	LIGHT RECT 12V REVERSE REFLEX	2
42	0311511	GROMMET, TAIL LIGHT, RECTANGULAR	8
43	0311755	WATER SEPARATOR-MONNIER	1
44	0312622	FITTING, 16FJ-6MJ	1
45	04000381	SS BHSCS 1/4-20 X 1	16
46	0400070	SCREW, 1/4-20X1 HHC GR5	6
47	0400078	SCREW, 1/4-20X2 HHC GR5	4
48	0400128	SCREW, 3/8-16X1-1/4 FHS GR8 BO	24
49	0400367	NUT, 1/4-20 LOK	4
50	0400369	NUT, 1/4 SPR J	8

ITEM	PART NUMBER	DESCRIPTION	QTY
51	0400393	NUT, 3/8-16 JAM	16
52	0400451	WASHER, 1/4	6
53	0400454	WASHER, 1/4 SS	22
54	0400491	LKWASHER, 1/2	14
55	0400498	WASHER, 1/2X2X0.125	14
56	0400687	SCREW, 10-24X3/4 PRH SS	4
57	0400816	WASHER, M10 SS	4
58	0401054	SCREW, 8-32X3/4 PRH SS	12
59	0402002	NUT, 8-32 LOK EXT SS	12
60	0402020	SCREW, 1/4-20X3/4 HHC SS	2
61	0402021	SCREW, 1/4-20X1 HHC SS	2
62	0402043	SCREW, 3/8-16X1-1/4 HHC SS	8
63	0402111	LKWASHER, 1/4 SS	18
64	0402113	NUT, 1/4-20 LOK SS	2
65	0402120	WASHER, 3/8 SS	16
66	0402121	LKWASHER, 3/8 SS	8
67	0402122	NUT, 3/8-16 HEX SS	8
68	0724476	PAD - NYLATRON - BBOM GUIDE	4
69	0724500	PIN - LOWER JACK LEG CYL	2
70	0726593	APNL-DCV LWR CTL PNL, 3 WINCH	2
71	0726594	APNL-DCV UPR LH CTL PNL,3WNCH	1
72	0726595	APNL-DCV UPR RH CTL PNL,3WNCH	1
73	0910787	STINGER ASSY - EURO - 144"	1
74	0911010	RECOVERY BOOM INSTALL V-70	1
75	0911120	LH REAR OUTRIGGER ASSY	1
76	0911121	RH REAR OUTRIGGER ASSY	1
77	0911804	AIR REGULATOR-GAUGE ASSEMBLY	2
78	0912015	SUBFRAME ASSY V70-100 STDWINCH	1
79	9010520	FITTING-ELBOW 1/4T-1/4NPT	2
80	9011053	FITTING, BRASS 1/4 TUBE-1/4 MP	1
81	9012594	FITT,HYD RUN TEE, 6MJx6MBx6MJ	1
82	9016815	MUNCIE PUMP TSPKS17-17-2BSSB	1
83	9024041	SWITCH, ROCKER SPST RED 12V21A	11
84	9041403	1/2 NC X 1 1/2 HHCS PL GR8	14
85	916770001	HOSE- HYD. 3/8 - 105" 8MJ-6MFA	2
86	920400005	MUD FLAP BRACE PLATE	2
87	9402970	TOOLBOX MTG. PAD	14
88	942480011	PLATE,SLOT-SS REAR WASHER TBOX	14
89	942480300	MTG ANGLE WELD'T LH - DCV COV.	2
90	942487300	MTG ANGLE WELD'T RH - DCV COV.	2
91	94320052	MUD FLAP 920-940 RUBBER	2
92	945770002	6AT2(6T90S-8MJ) HCL 48	2
93	945770003	6AT2(6T90L-8MJ) 24 HYD	4
94	946210500	TUBE, FRONT MTG WELD'T	1
95	946770003	HOSE ASSEMBLY - 8MJ-8MJ X 45	4
96	946770006	HOSE ASSEMBLY - 62	2
97	946770007	HOSE ASSEMBLY - 79	2
98	946770009	HOSE ASSEMBLY - 104	2
99	948570000	5x5 LIFT BAR ASSEMBLY 948 XHD	1
100	HA293	FITTING-ADPTR SWV RUN	1

09008490, BUA V70 2-WINCH REAR OUTRIGGER (cont'd)

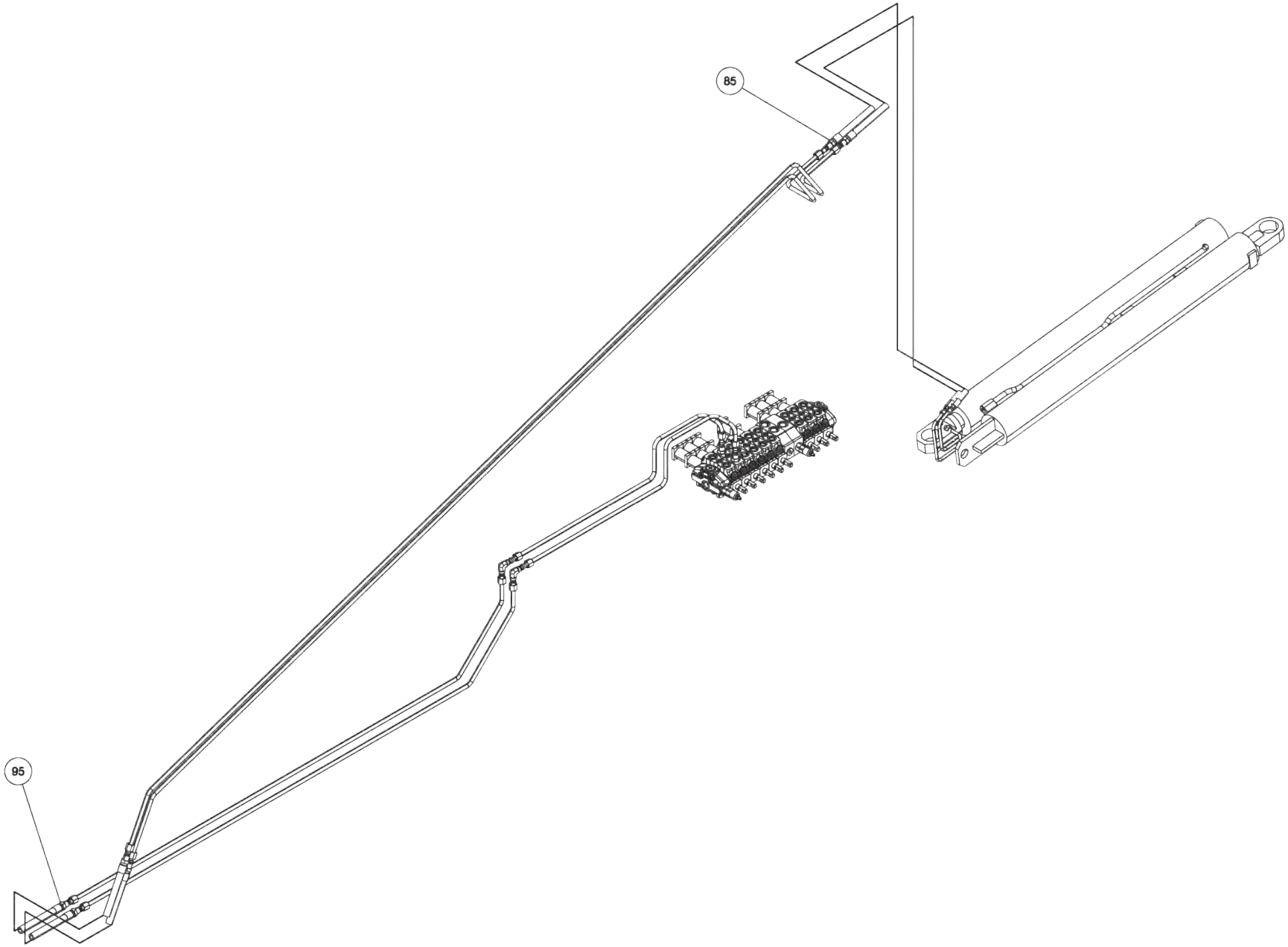

09008490, BUA V70 2-WINCH REAR OUTRIGGER (cont'd)

ITEM	PART NUMBER	DESCRIPTION	QTY
--	09008490	BUA V70 2W REAR OUTRIGGER	
1	0300044	FITT, HYD CONN. 6MJ-8MB	4
2	0300341	KNOB, BLACK (BLANK)	12
3	0300364	CLAMP-HOSE,0.875"-2.75" 50"LBS	8
4	0301470	FITTING, 90ELB 6MJ-8MB90	4
5	0301473	HOSE HYD, 18" LG	4
6	0301620	FITTING, HYD. 6MJ - 6MB90	5
7	0301696	FITTING, ELB 90 DEG 6MJ-6FJX90	5
8	0301895	GREASE FITTING, 1/8 STR PTF	2
9	0301909	RECEPTACLE BOOT	1
10	0301946	FITTING, BLKHD CONNECT	3
11	0301947	FITTING, 45 DEG ADAPTER	1
12	0301948	HD 7 WAY TRAILER CONNECT	1
13	0301959	SNAP RING-INTERNAL 1-1/2	4
14	0301998	HOSE HYD, 24" LG	4
15	0302205	GAUGE, FLUSH MNTG-6000 PSI	4
16	0302534	FITTING, 45 DEG ELBOW	2
17	0302698	FITTING, HOSE BARB,1-1/4	2
18	0302901	HOSE HYD, 120" 12C12	2
19	0303017	FITTING, CONNECTOR	4
20	0303170	HOSE, HYD. 75"	1
21	0303185	HOSE HYD, 66" LG.	1
22	0303538	FITT, ADAPTER -BRASS 8FP-6MP	1
23	0303539	QUICK DISCONNECT 3/8 FPT	1
24	0303948	ELBOW, 12MJ-16MB90	2
25	0304363	QUICK DISCONNECT 1/2 FPT	2
26	0306539	HOSE BARB 20HOSE16MB90	2
27	0306983	FITT-MALE RUNTEE 1/4T-1/4NPT	1
28	0307216	LIGHT, AMBER LED RECT 5.25x3.3	2
29	0307525	HOSE, HYD ASSY 120" LGTH 90L	4
30	0307538	LIGHT, MRKR-RED LED 4.5 X 1.63	4
31	0307604	KNOB, RED LONG - SK0700-07	4
32	0307778	PLUG, FILLER	2
33	0310010	SUCTION HOSE,1-1/4ID x50 100R4	1
34	0310881	6 WAY DIVERTER VALVE-12V	2
35	0310944	LH 200 CB TDM ALM BDY '10 VULC	1
36	0310945	RH 200 CB TDM ALM BDY '10 VULC	1
37	0311355	HOBBS HOURMETER	1
38	0311502	LIGHT 6"OVAL CLEAR-AMBER LED	6
39	0311503	GROMMET, LIGHT 6" OVAL	6
40	0311508	LED RECT RED STOP-CLEAR-12/24V	4
41	0311510	LIGHT RECT 12V REVERSE REFLEX	2
42	0311511	GROMMET, TAIL LIGHT, RECTANGULAR	8
43	0311755	WATER SEPARATOR-MONNIER	1
44	0312622	FITTING, 16FJ-6MJ	1
45	04000381	SS BHSCS 1/4-20 X 1	16
46	0400070	SCREW, 1/4-20X1 HHC GR5	6
47	0400078	SCREW, 1/4-20X2 HHC GR5	4
48	0400128	SCREW, 3/8-16X1-1/4 FHS GR8 BO	24
49	0400367	NUT, 1/4-20 LOK	4
50	0400369	NUT, 1/4 SPR J	8

ITEM	PART NUMBER	DESCRIPTION	QTY
51	0400393	NUT, 3/8-16 JAM	16
52	0400451	WASHER, 1/4	6
53	0400454	WASHER, 1/4 SS	22
54	0400491	LKWASHER, 1/2	14
55	0400498	WASHER, 1/2X2X0.125	14
56	0400687	SCREW, 10-24X3/4 PRH SS	4
57	0400816	WASHER, M10 SS	4
58	0401054	SCREW, 8-32X3/4 PRH SS	12
59	0402002	NUT, 8-32 LOK EXT SS	12
60	0402020	SCREW, 1/4-20X3/4 HHC SS	2
61	0402021	SCREW, 1/4-20X1 HHC SS	2
62	0402043	SCREW, 3/8-16X1-1/4 HHC SS	8
63	0402111	LKWASHER, 1/4 SS	18
64	0402113	NUT, 1/4-20 LOK SS	2
65	0402120	WASHER, 3/8 SS	16
66	0402121	LKWASHER, 3/8 SS	8
67	0402122	NUT, 3/8-16 HEX SS	8
68	0724476	PAD - NYLATRON - BBOM GUIDE	4
69	0724500	PIN - LOWER JACK LEG CYL	2
70	0726593	APNL-DCV LWR CTL PNL, 3 WINCH	2
71	0726594	APNL-DCV UPR LH CTL PNL,3WNCH	1
72	0726595	APNL-DCV UPR RH CTL PNL,3WNCH	1
73	0910787	STINGER ASSY - EURO - 144"	1
74	0911010	RECOVERY BOOM INSTALL V-70	1
75	0911120	LH REAR OUTRIGGER ASSY	1
76	0911121	RH REAR OUTRIGGER ASSY	1
77	0911804	AIR REGULATOR-GAUGE ASSEMBLY	2
78	0912015	SUBFRAME ASSY V70-100 STDWINCH	1
79	9010520	FITTING-ELBOW 1/4T-1/4NPT	2
80	9011053	FITTING, BRASS 1/4 TUBE-1/4 MP	1
81	9012594	FITT,HYD RUN TEE, 6MJx6MBx6MJ	1
82	9016815	MUNCIE PUMP TSPKS17-17-2BSSB	1
83	9024041	SWITCH, ROCKER SPST RED 12V21A	11
84	9041403	1/2 NC X 1 1/2 HHCS PL GR8	14
85	916770001	HOSE- HYD. 3/8 - 105" 8MJ-6MFA	2
86	920400005	MUD FLAP BRACE PLATE	2
87	9402970	TOOLBOX MTG. PAD	14
88	942480011	PLATE,SLOT-SS REAR WASHER TBOX	14
89	942480300	MTG ANGLE WELD'T LH - DCV COV.	2
90	942487300	MTG ANGLE WELD'T RH - DCV COV.	2
91	94320052	MUD FLAP 920-940 RUBBER	2
92	945770002	6AT2(6T90S-8MJ) HCL 48	2
93	945770003	6AT2(6T90L-8MJ) 24 HYD	4
94	946210500	TUBE, FRONT MTG WELD'T	1
95	946770003	HOSE ASSEMBLY - 8MJ-8MJ X 45	4
96	946770006	HOSE ASSEMBLY - 62	2
97	946770007	HOSE ASSEMBLY - 79	2
98	946770009	HOSE ASSEMBLY - 104	2
99	948570000	5x5 LIFT BAR ASSEMBLY 948 XHD	1
100	HA293	FITTING-ADPTR SWV RUN	1

09008490, BUA V70 2-WINCH REAR OUTRIGGER (cont'd)

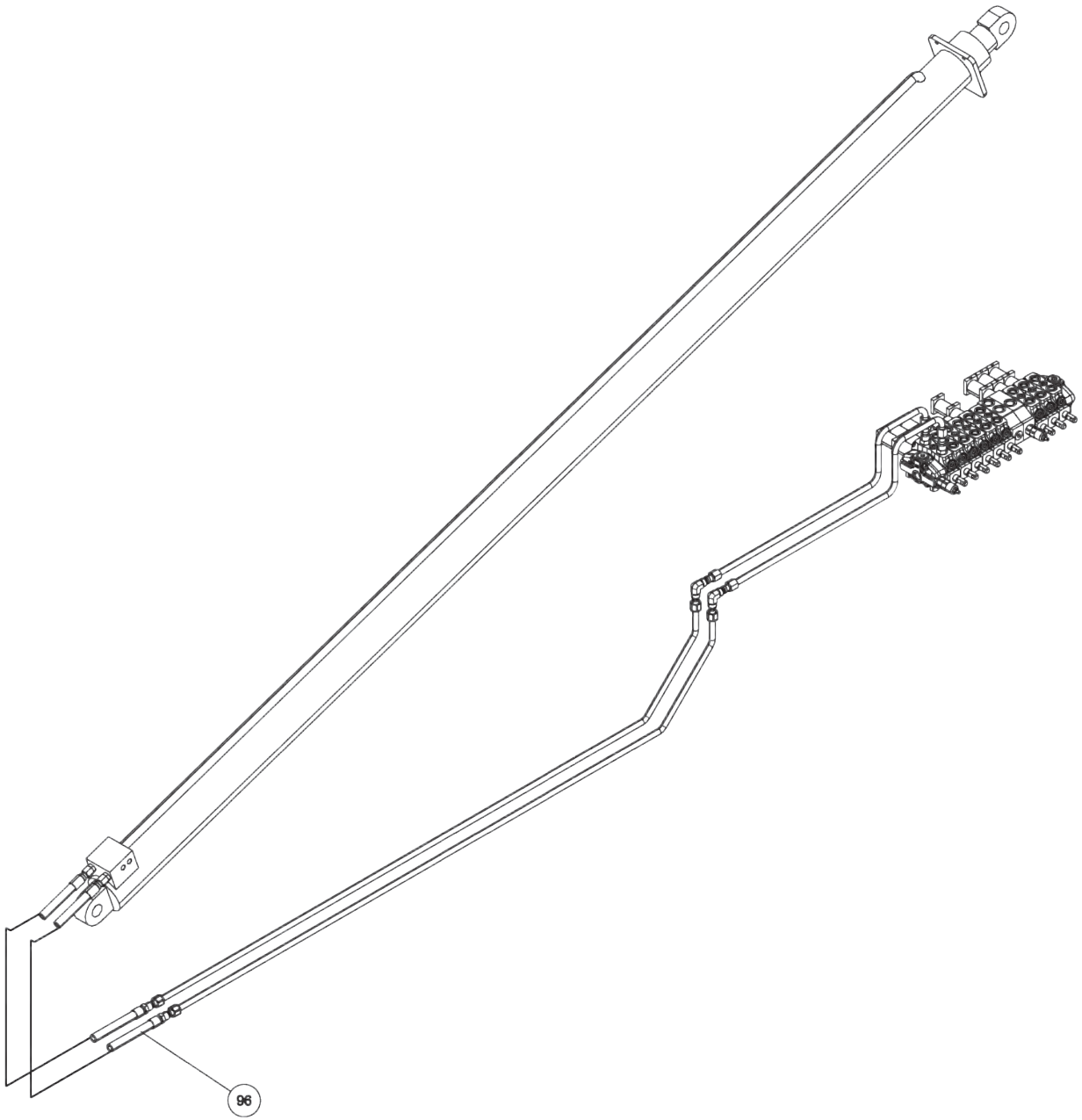

09008490, BUA V70 2-WINCH REAR OUTRIGGER (cont'd)

ITEM	PART NUMBER	DESCRIPTION	QTY
--	09008490	BUA V70 2W REAR OUTRIGGER	
1	0300044	FITT, HYD CONN. 6MJ-8MB	4
2	0300341	KNOB, BLACK (BLANK)	12
3	0300364	CLAMP-HOSE,0.875"-2.75" 50"LBS	8
4	0301470	FITTING, 90ELB 6MJ-8MB90	4
5	0301473	HOSE HYD, 18" LG	4
6	0301620	FITTING, HYD. 6MJ - 6MB90	5
7	0301696	FITTING, ELB 90 DEG 6MJ-6FJX90	5
8	0301895	GREASE FITTING, 1/8 STR PTF	2
9	0301909	RECEPTACLE BOOT	1
10	0301946	FITTING, BLKHD CONNECT	3
11	0301947	FITTING, 45 DEG ADAPTER	1
12	0301948	HD 7 WAY TRAILER CONNECT	1
13	0301959	SNAP RING-INTERNAL 1-1/2	4
14	0301998	HOSE HYD, 24" LG	4
15	0302205	GAUGE, FLUSH MNTG-6000 PSI	4
16	0302534	FITTING, 45 DEG ELBOW	2
17	0302698	FITTING, HOSE BARB,1-1/4	2
18	0302901	HOSE HYD, 120" 12C12	2
19	0303017	FITTING, CONNECTOR	4
20	0303170	HOSE, HYD. 75"	1
21	0303185	HOSE HYD, 66" LG.	1
22	0303538	FITT, ADAPTER -BRASS 8FP-6MP	1
23	0303539	QUICK DISCONNECT 3/8 FPT	1
24	0303948	ELBOW, 12MJ-16MB90	2
25	0304363	QUICK DISCONNECT 1/2 FPT	2
26	0306539	HOSE BARB 20HOSE16MB90	2
27	0306983	FITT-MALE RUNTEE 1/4T-1/4NPT	1
28	0307216	LIGHT, AMBER LED RECT 5.25x3.3	2
29	0307525	HOSE, HYD ASSY 120" LGTH 90L	4
30	0307538	LIGHT, MRKR-RED LED 4.5 X 1.63	4
31	0307604	KNOB, RED LONG - SK0700-07	4
32	0307778	PLUG, FILLER	2
33	0310010	SUCTION HOSE,1-1/4ID x50 100R4	1
34	0310881	6 WAY DIVERTER VALVE-12V	2
35	0310944	LH 200 CB TDM ALM BDY '10 VULC	1
36	0310945	RH 200 CB TDM ALM BDY '10 VULC	1
37	0311355	HOBBS HOURMETER	1
38	0311502	LIGHT 6"OVAL CLEAR-AMBER LED	6
39	0311503	GROMMET, LIGHT 6" OVAL	6
40	0311508	LED RECT RED STOP-CLEAR-12/24V	4
41	0311510	LIGHT RECT 12V REVERSE REFLEX	2
42	0311511	GROMMET, TAIL LIGHT, RECTANGULAR	8
43	0311755	WATER SEPARATOR-MONNIER	1
44	0312622	FITTING, 16FJ-6MJ	1
45	04000381	SS BHSCS 1/4-20 X 1	16
46	0400070	SCREW, 1/4-20X1 HHC GR5	6
47	0400078	SCREW, 1/4-20X2 HHC GR5	4
48	0400128	SCREW, 3/8-16X1-1/4 FHS GR8 BO	24
49	0400367	NUT, 1/4-20 LOK	4
50	0400369	NUT, 1/4 SPR J	8

ITEM	PART NUMBER	DESCRIPTION	QTY
51	0400393	NUT, 3/8-16 JAM	16
52	0400451	WASHER, 1/4	6
53	0400454	WASHER, 1/4 SS	22
54	0400491	LKWASHER, 1/2	14
55	0400498	WASHER, 1/2X2X0.125	14
56	0400687	SCREW, 10-24X3/4 PRH SS	4
57	0400816	WASHER, M10 SS	4
58	0401054	SCREW, 8-32X3/4 PRH SS	12
59	0402002	NUT, 8-32 LOK EXT SS	12
60	0402020	SCREW, 1/4-20X3/4 HHC SS	2
61	0402021	SCREW, 1/4-20X1 HHC SS	2
62	0402043	SCREW, 3/8-16X1-1/4 HHC SS	8
63	0402111	LKWASHER, 1/4 SS	18
64	0402113	NUT, 1/4-20 LOK SS	2
65	0402120	WASHER, 3/8 SS	16
66	0402121	LKWASHER, 3/8 SS	8
67	0402122	NUT, 3/8-16 HEX SS	8
68	0724476	PAD - NYLATRON - BBOM GUIDE	4
69	0724500	PIN - LOWER JACK LEG CYL	2
70	0726593	APNL-DCV LWR CTL PNL, 3 WINCH	2
71	0726594	APNL-DCV UPR LH CTL PNL,3WNCH	1
72	0726595	APNL-DCV UPR RH CTL PNL,3WNCH	1
73	0910787	STINGER ASSY - EURO - 144"	1
74	0911010	RECOVERY BOOM INSTALL V-70	1
75	0911120	LH REAR OUTRIGGER ASSY	1
76	0911121	RH REAR OUTRIGGER ASSY	1
77	0911804	AIR REGULATOR-GAUGE ASSEMBLY	2
78	0912015	SUBFRAME ASSY V70-100 STDWINCH	1
79	9010520	FITTING-ELBOW 1/4T-1/4NPT	2
80	9011053	FITTING, BRASS 1/4 TUBE-1/4 MP	1
81	9012594	FITT,HYD RUN TEE, 6MJx6MBx6MJ	1
82	9016815	MUNCIE PUMP TSPKS17-17-2BSSB	1
83	9024041	SWITCH, ROCKER SPST RED 12V21A	11
84	9041403	1/2 NC X 1 1/2 HHCS PL GR8	14
85	916770001	HOSE- HYD. 3/8 - 105" 8MJ-6MFA	2
86	920400005	MUD FLAP BRACE PLATE	2
87	9402970	TOOLBOX MTG. PAD	14
88	942480011	PLATE,SLOT-SS REAR WASHER TBOX	14
89	942480300	MTG ANGLE WELD'T LH - DCV COV.	2
90	942487300	MTG ANGLE WELD'T RH - DCV COV.	2
91	94320052	MUD FLAP 920-940 RUBBER	2
92	945770002	6AT2(6T90S-8MJ) HCL 48	2
93	945770003	6AT2(6T90L-8MJ) 24 HYD	4
94	946210500	TUBE, FRONT MTG WELD'T	1
95	946770003	HOSE ASSEMBLY - 8MJ-8MJ X 45	4
96	946770006	HOSE ASSEMBLY - 62	2
97	946770007	HOSE ASSEMBLY - 79	2
98	946770009	HOSE ASSEMBLY - 104	2
99	948570000	5x5 LIFT BAR ASSEMBLY 948 XHD	1
100	HA293	FITTING-ADPTR SWV RUN	1

0911120, LH REAR OUTRIGGER ASSEMBLY

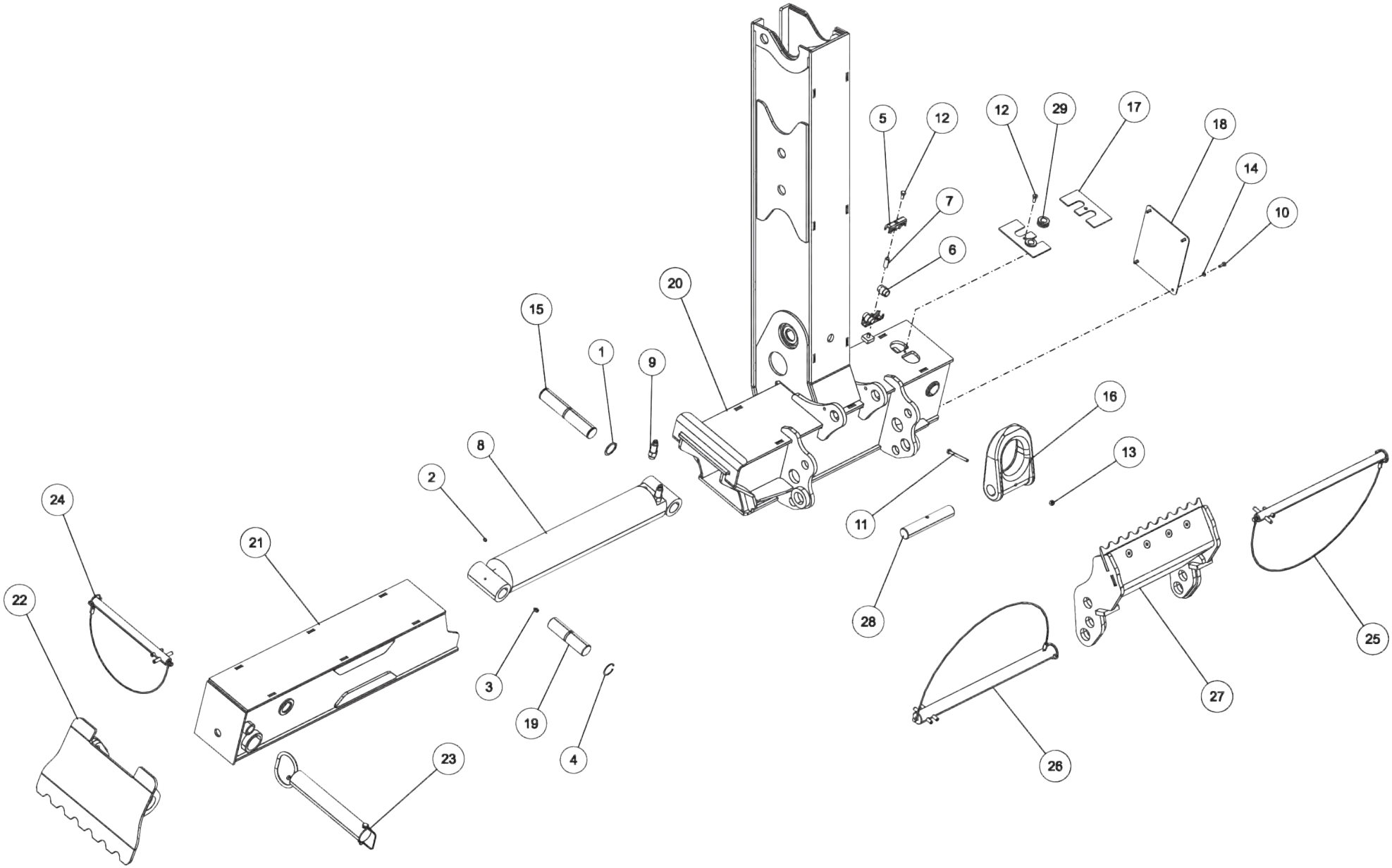

0911120, LH REAR OUTRIGGER ASSEMBLY (cont'd)

ITEM	PART NUMBER	DESCRIPTION	QTY
--	0911120	LH REAR OUTRIGGER ASSY	
1	0300109	SNAP RING, 1.5 5100-150	2
2	0300113	GREASE FITTING, 1/4-28 STR	1
3	0301895	GREASE FITTING, 1/8 STR PTF	1
4	0301959	SNAP RING-INTERNAL 1-1/2	2
5	0302546	CLAMPING UNIT C-PH-10-2	2
6	0302550	C-SB-10-12 3/4 SPLIT	2
7	0302551	C-SN-10 SOCKET-HEAD	1
8	0310145	CYLINDER - OUTRIGGER EXTENDED	1
9	0310289	FITTING-LONG ADAPTER 6MJ-8MBLL	2
10	0400066	SCREW, 1/4-20X3/4 HHC GR5	4
11	0400114	SCREW, 5/16-18X3 HHC GR5	1
12	0400118	SCREW, 5/16-18X3/4 HHC GR5	2
13	0400382	NUT, 5/16-18 LOK	1
14	0400452	LKWASHER, 1/4	4
15	0719540	PIN, EXTEND CYL (BASE END)	1
16	0719585	D-RING, TOWING	1
17	0723889	PLATE-HOSE RETAINING	2
18	0724617	PLATE OUTRIGGER COVER	1
19	0724635	PIN CYLINDER MTG	1
20	0810030	LH REAR OUTRIGGER LEG	1
21	0810033	INNER REAR OUTRIGGER	1
22	0810035	PAD - REAR OUTRIGGER	1
23	0906963	PIN - REAR OUTRIGGER PAD ASSY	1
24	0911122	PIN ASSY - PAD LOCK	1
25	0911123	PIN ASSY - SPADE LOCK	1
26	0911124	PIN ASSY - SPADE PIVOT	1
27	0911167	SPADE ASSY - REAR OUTRIGGER	1
28	GA0215	PIN - "D" RING	1
29	GH246	SPLIT RUBBER GROMMET	2

0911121, RH REAR OUTRIGGER ASSEMBLY

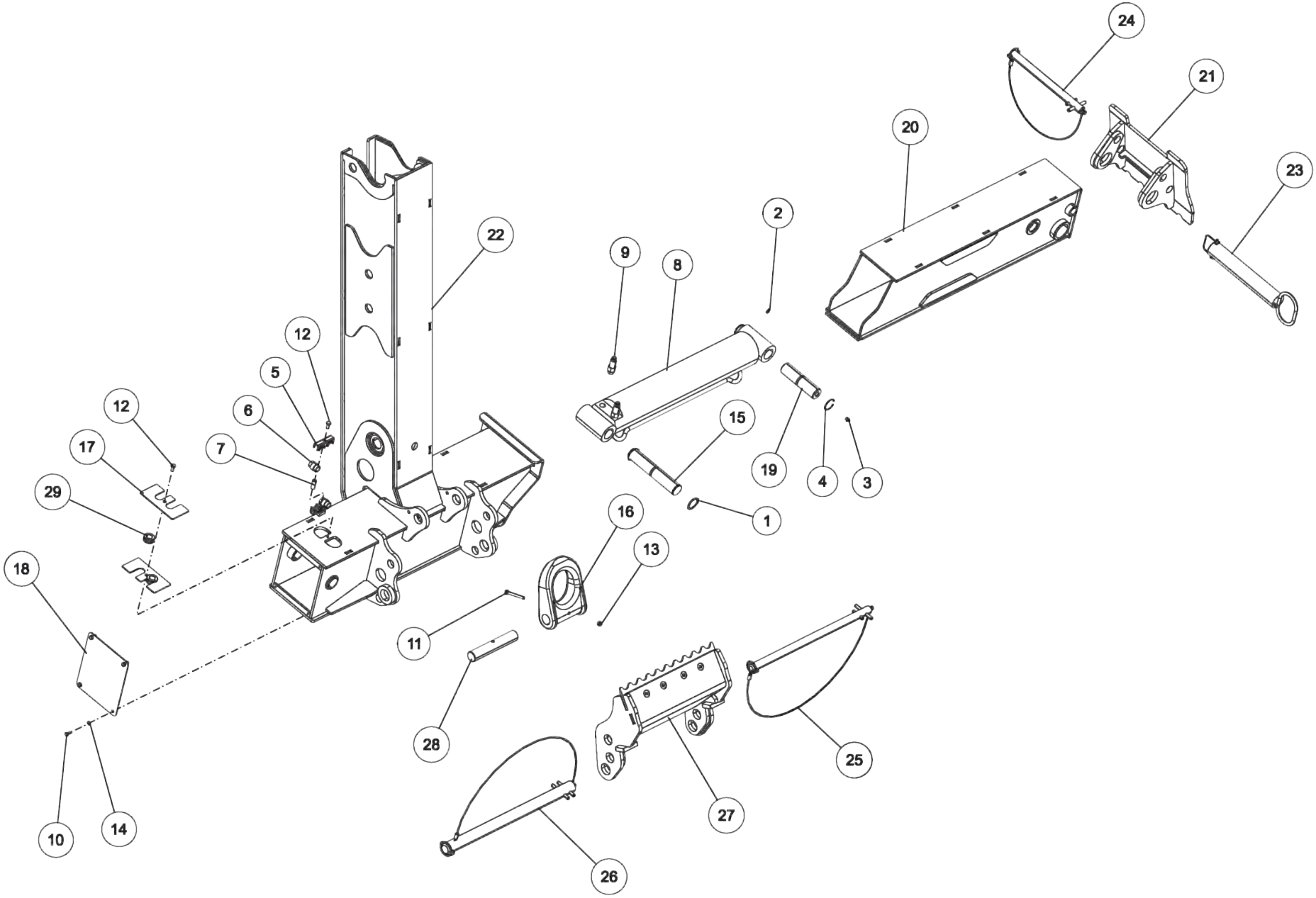

0911121, RH REAR OUTRIGGER ASSEMBLY (cont'd)

ITEM	PART NUMBER	DESCRIPTION	QTY
--	0911121	RH REAR OUTRIGGER ASSY	
1	0300109	SNAP RING, 1.5 5100-150	2
2	0300113	GREASE FITTING, 1/4-28 STR	1
3	0301895	GREASE FITTING, 1/8 STR PTF	1
4	0301959	SNAP RING-INTERNAL 1-1/2	2
5	0302546	CLAMPING UNIT C-PH-10-2	2
6	0302550	C-SB-10-12 3/4 SPLIT	2
7	0302551	C-SN-10 SOCKET-HEAD	1
8	0310145	CYLINDER - OUTRIGGER EXTENDED	1
9	0310289	FITTING-LONG ADAPTER 6MJ-8MBLL	2
10	0400066	SCREW, 1/4-20X3/4 HHC GR5	4
11	0400114	SCREW, 5/16-18X3 HHC GR5	1
12	0400118	SCREW, 5/16-18X3/4 HHC GR5	2
13	0400382	NUT, 5/16-18 LOK	1
14	0400452	LKWASHER, 1/4	4
15	0719540	PIN, EXTEND CYL (BASE END)	1
16	0719585	D-RING, TOWING	1
17	0723889	PLATE-HOSE RETAINING	2
18	0724617	PLATE OUTRIGGER COVER	1
19	0724635	PIN CYLINDER MTG	1
20	0810033	INNER REAR OUTRIGGER	1
21	0810035	PAD - REAR OUTRIGGER	1
22	0810047	RH REAR OUTRIGGER LEG	1
23	0906963	PIN - REAR OUTRIGGER PAD ASSY	1
24	0911122	PIN ASSY - PAD LOCK	1
25	0911123	PIN ASSY - SPADE LOCK	1
26	0911124	PIN ASSY - SPADE PIVOT	1
27	0911167	SPADE ASSY - REAR OUTRIGGER	1
28	GA0215	PIN - "D" RING	1
29	GH246	SPLIT RUBBER GROMMET	2

0906963, PIN - REAR OUTRIGGER PAD ASSEMBLY

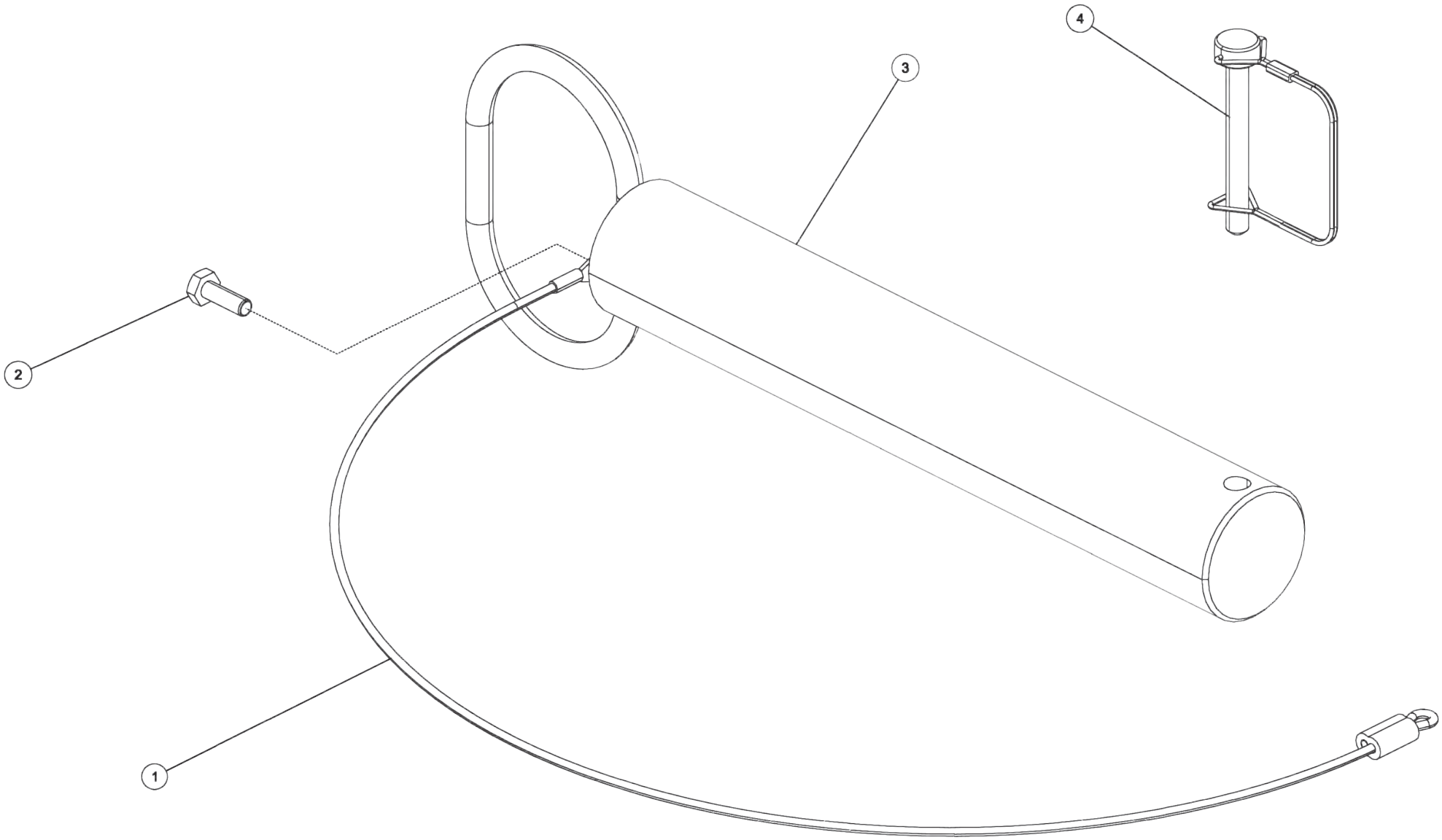

0906963, PIN - REAR OUTRIGGER PAD ASSEMBLY (cont'd)

ITEM	PART NUMBER	DESCRIPTION	QTY
--	0906963	PIN - REAR OUTRIGGER PAD ASSY	
1	0311210	CABLE, PIN RETAINER ASSY .125	1
2	0402020	SCREW, 1/4-20X3/4 HHC SS	1
3	0805893	PIN WLDT REAR OUTRIGGER PAD	1
4	HD1259	SAFETY SNAP PIN	1

0911122, PIN ASSEMBLY - PAD LOCK

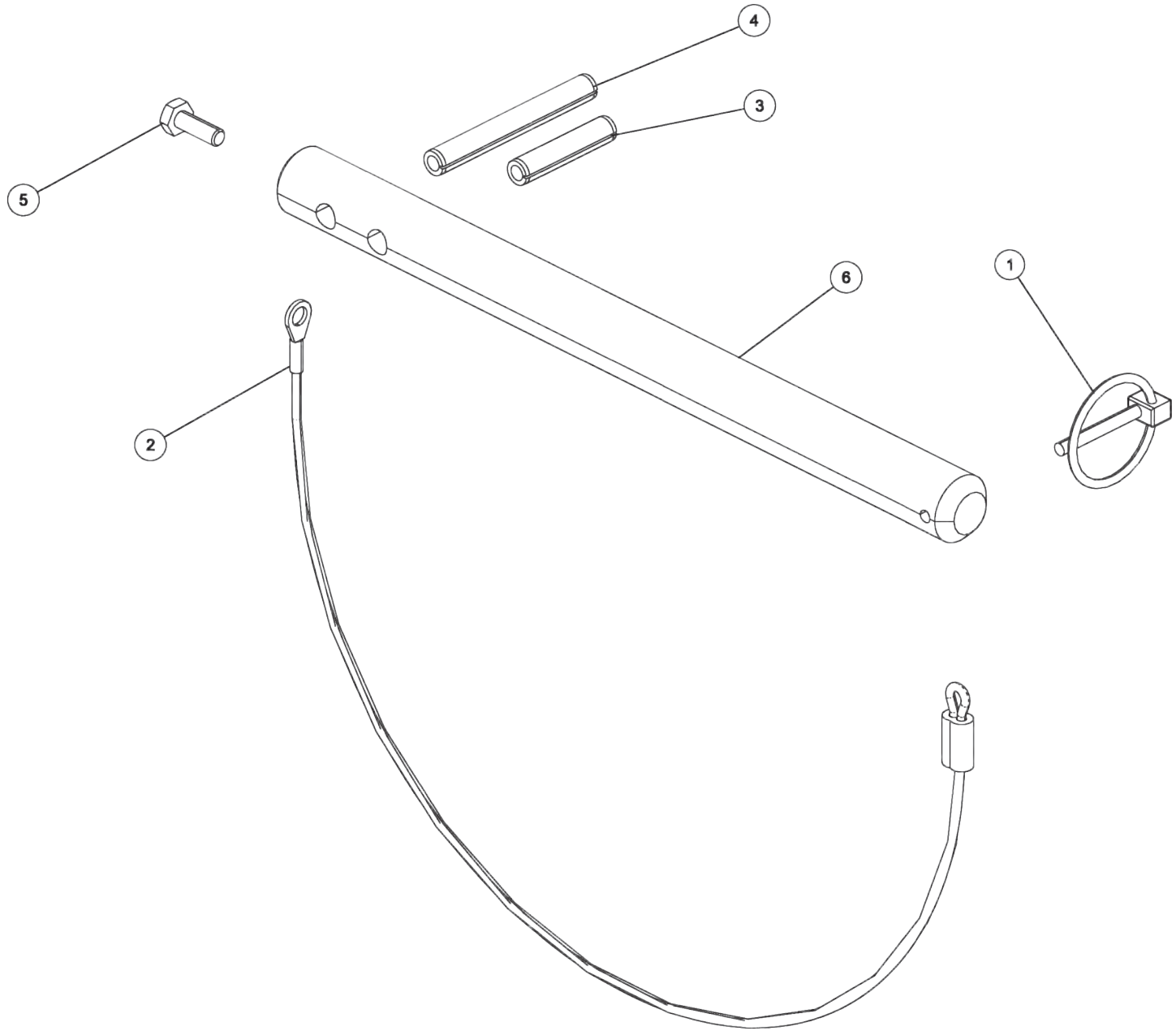

0911122, PIN ASSEMBLY - PAD LOCK (cont'd)

ITEM	PART NUMBER	DESCRIPTION	QTY
--	0911122	PIN ASSY - PAD LOCK	
1	0302474	PIN, LINCH 3/16	1
2	0311210	CABLE, PIN RETAINER ASSY .125	1
3	0400564	PIN, 3/8X1-3/4 SPR	1
4	0400568	PIN, 3/8X3 SPR	1
5	0402020	SCREW, 1/4-20X3/4 HHC SS	1
6	0724632	PIN LOCK OUTRIGGER PAD	1

0911123, PIN ASSEMBLY - SPADE LOCK

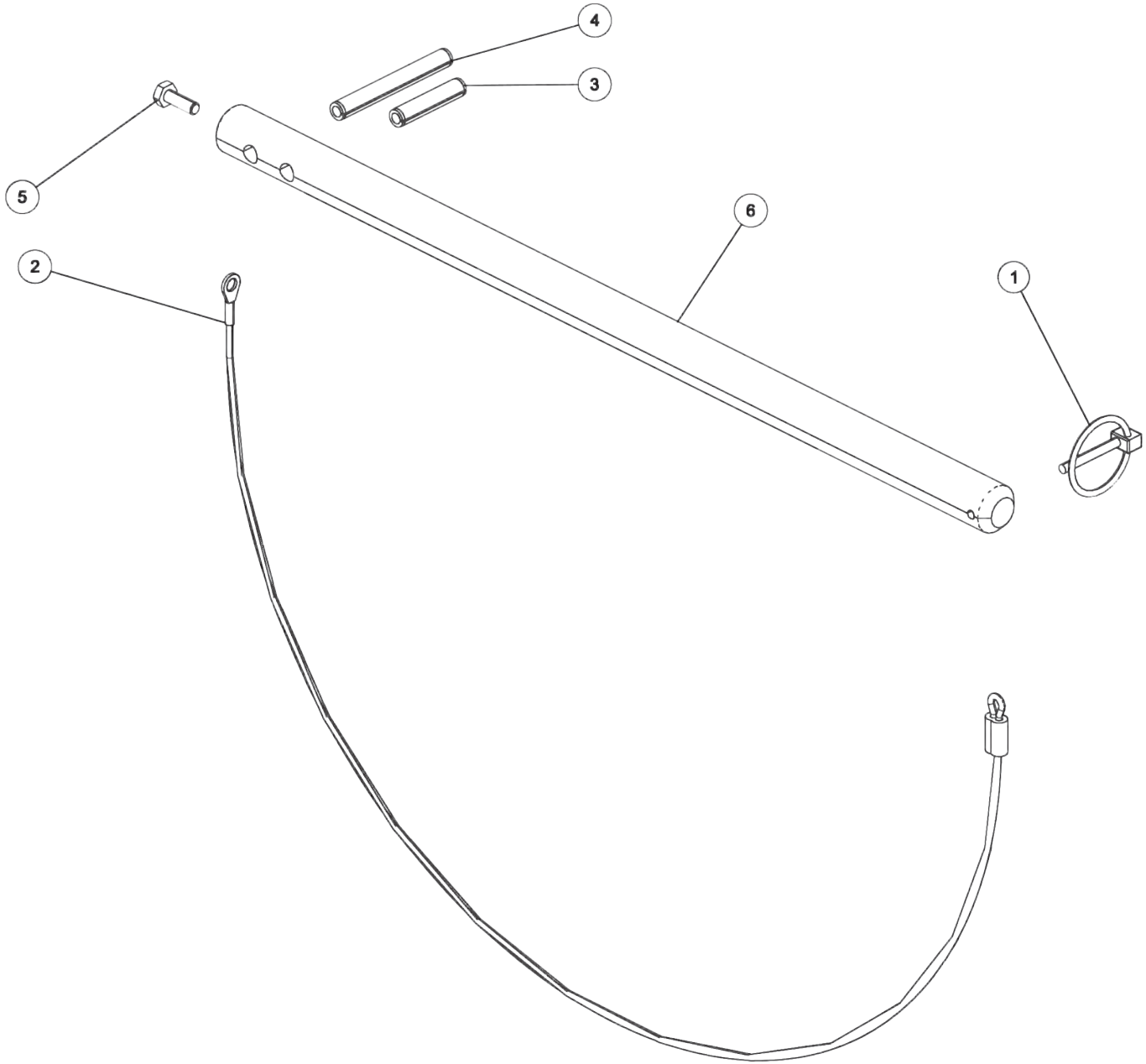

0911123, PIN ASSEMBLY - SPADE LOCK (cont'd)

ITEM	PART NUMBER	DESCRIPTION	QTY
--	0911123	PIN ASSY - SPADE LOCK	
1	0302474	PIN, LINCH 3/16	1
2	0311210	CABLE, PIN RETAINER ASSY .125	1
3	0312703	CABLE, PIN RETAINER (LONG)	1
4	0400564	PIN, 3/8X1-3/4 SPR	1
5	0400568	PIN, 3/8X3 SPR	1
6	0402020	SCREW, 1/4-20X3/4 HHC SS	1
7	0724633	PIN LOCK SPADE	1

0911124, PIN ASSEMBLY - SPADE PIVOT

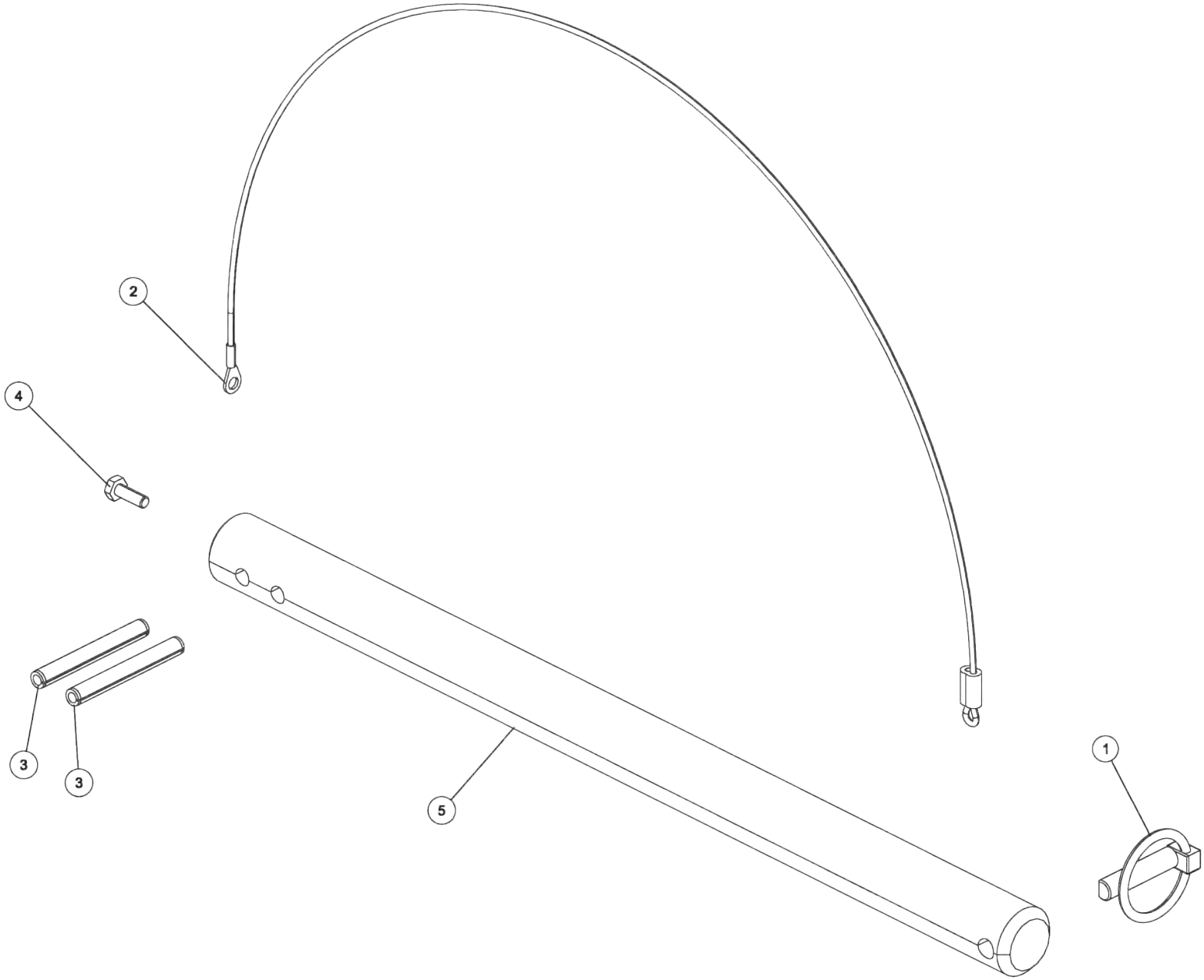

0911124, PIN ASSEMBLY - SPADE PIVOT (cont'd)

ITEM	PART NUMBER	DESCRIPTION	QTY
--	0911124	PIN ASSY - SPADE PIVOT	
1	0301861	QUICK PIN,LINCH -B7932 PL 7/16	1
2	0311210	CABLE, PIN RETAINER ASSY .125	1
3	0312703	CABLE, PIN RETAINER (LONG)	1
4	0400568	PIN, 3/8X3 SPR	1
5	0402020	SCREW, 1/4-20X3/4 HHC SS	1
6	0724634	PIN PIVOT SPADE	1

0911167, SPADE ASSEMBLY - REAR OUTRIGGER

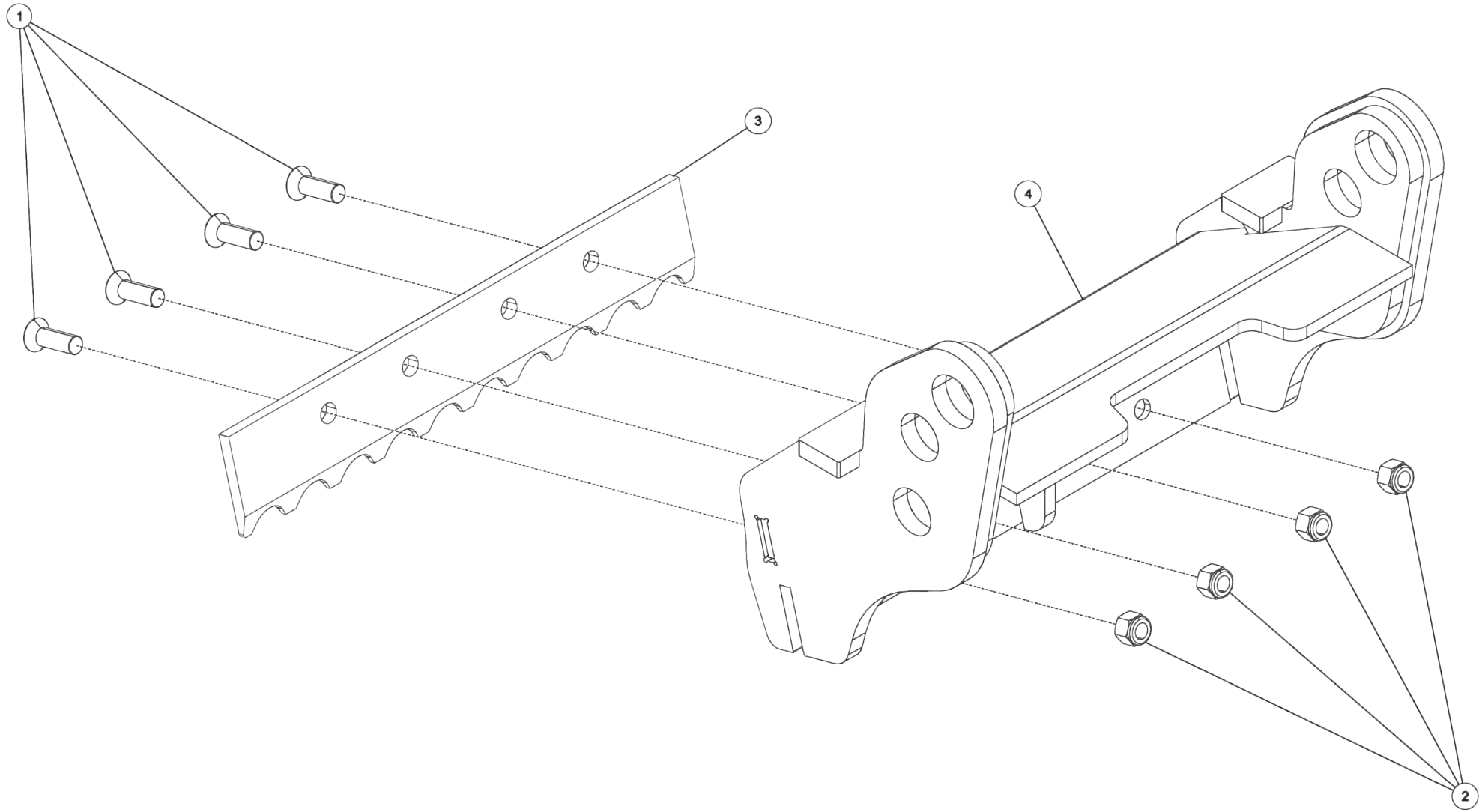

0911167, SPADE ASSEMBLY - REAR OUTRIGGER (cont'd)

ITEM	PART NUMBER	DESCRIPTION	QTY
--	0911167	SPADE ASSY - REAR OUTRIGGER	
1	0400193	SCREW, 1/2-13X1-1/2 FHS	4
2	0400416	NUT, 1/2-13 LOK GR8	4
3	0724616	PLATE BLADE SPADE	1
4	0810034	SPADE - REAR OUTRIGGERS	1

0910787, STINGER ASSY - EURO - 144"

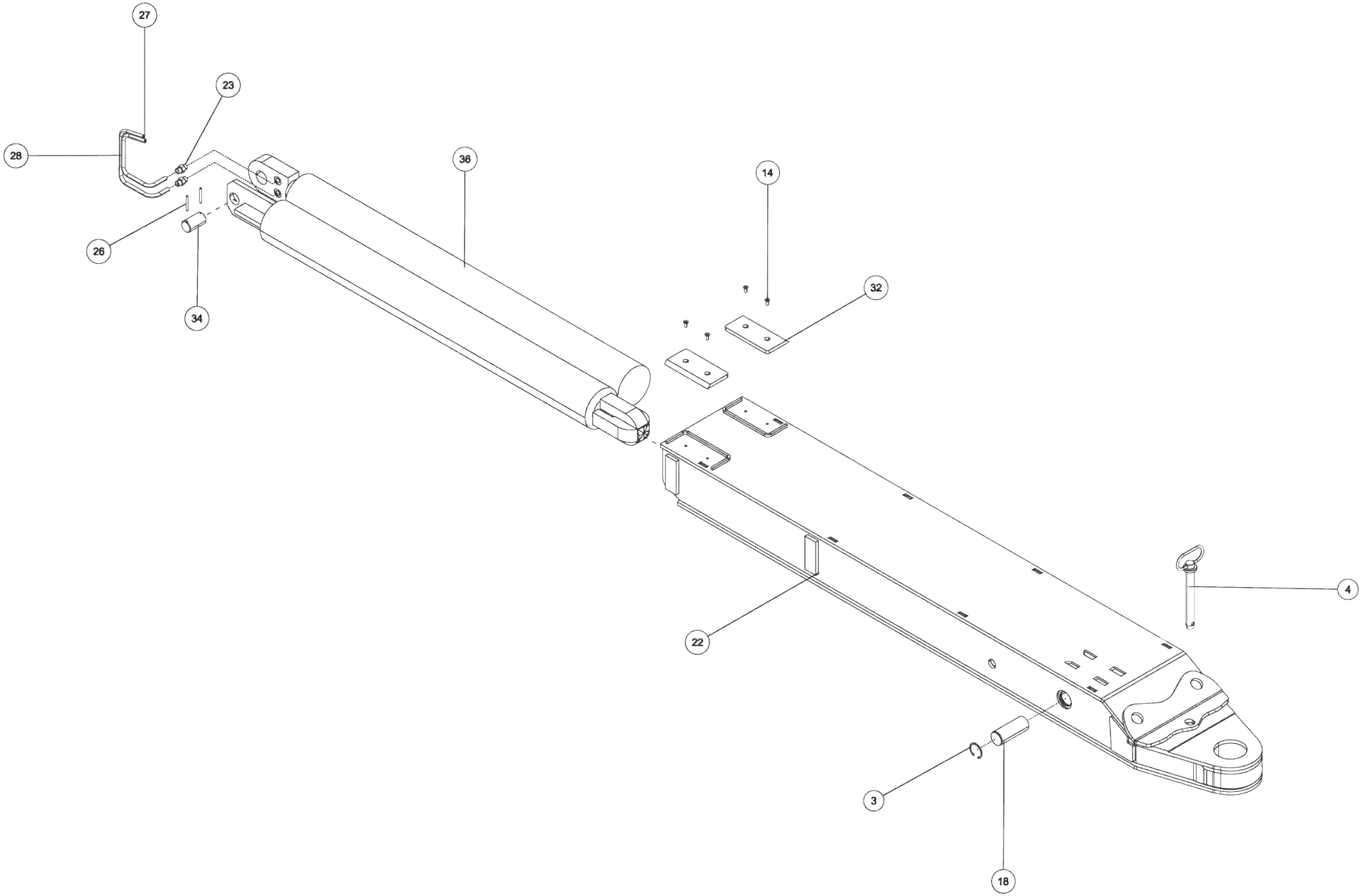

0910787, STINGER ASSY - EURO - 144" (cont'd)

ITEM	PART NUMBER	DESCRIPTION	QTY
--	0910787	STINGER ASSY - EURO - 144"	
1	0300113	GREASE FITTING, 1/4-28 STR	4
2	0301895	GREASE FITTING, 1/8 STR PTF	4
3	0301959	SNAP RING-INTERNAL 1-1/2	1
4	0313329	7/8X6 1/2 LG HITCH PIN	1
5	0400134	SCREW, 3/8-24X3/4 FHS	6
6	0400151	SCREW, 3/8-24X3/4 HHC GR5	4
7	0400176	SCREW, 1/2-13X1 HHC GR5	1
8	0400177	SCREW, 1/2-13X1-1/4 HHC GR5	1
9	0400248	SCREW, 5/8-11X1 HHC GR8	1
10	0400491	LKWASHER, 1/2	2
11	0400492	USS FLAT WASHER, 1/2	2
12	0400503	WASHER, 5/8 GR8	1
13	0400508	LKWASHER, 5/8	6
14	0400594	SCREW, 1/4-20X5/8 FHS	8
15	0401009	SCREW, 5/8-18X1 FHS	4
16	0723463	PLATE, PAD RETAINER	1
17	0723476	PLATE, PAD RETAINER	1
18	0724348	PIN, EXT CYL REAR MTG -STINGER	1
19	0724694	PLATE - ALUMINUM DRESS-UP	1
20	0807741	1ST STAGE STINGER WELD'T 144"	1
21	0807742	FOLDING BOOM WELD'T 144"	1
22	0807969	2ND STAGE STINGER WELDMENT	1
23	9012510	CONNECTOR 6SAE MALE-3/8	2
24	9040602	5/8NC X 1 1/4 HHCS GR 8	1
25	9044471	5/8-18 X 1 1/4 HHCS PL GR8	4
26	9046315	3/16 DIAX1 3/4LG ROLL PI	2
27	915760022	HYD.TUBE 3/8 STINGER EX	1
28	915760023	HYD.TUBE 3/8 STINGER EX	1
29	924902000	LOWER PIN WELD'T	1
30	930150001	STOP PAD (FOLDING BOOM)	4
31	930150002	SPACER (1ST STAGE STINGE	1
32	930150003	TOP PADS	4
33	930150004	BOTTOM PADS	4
34	930150011	PIN (CYL STIFFENER PLATE	1
35	930152000	FRONT MTG. PIN WELD'T	1
36	930775500	TWIN CYL. ARR'MENT-EURO.NEW	1
37	930901500	SHAFT WELD'T - FOLD.BOOM PIVOT	1
38	945300000	PIVOT FOOT WELDMENT	1
39	945351000	SHAFT WELDT-FOLDING BOOM PIVOT	1

0910787, STINGER ASSY - EURO - 144" (cont'd)

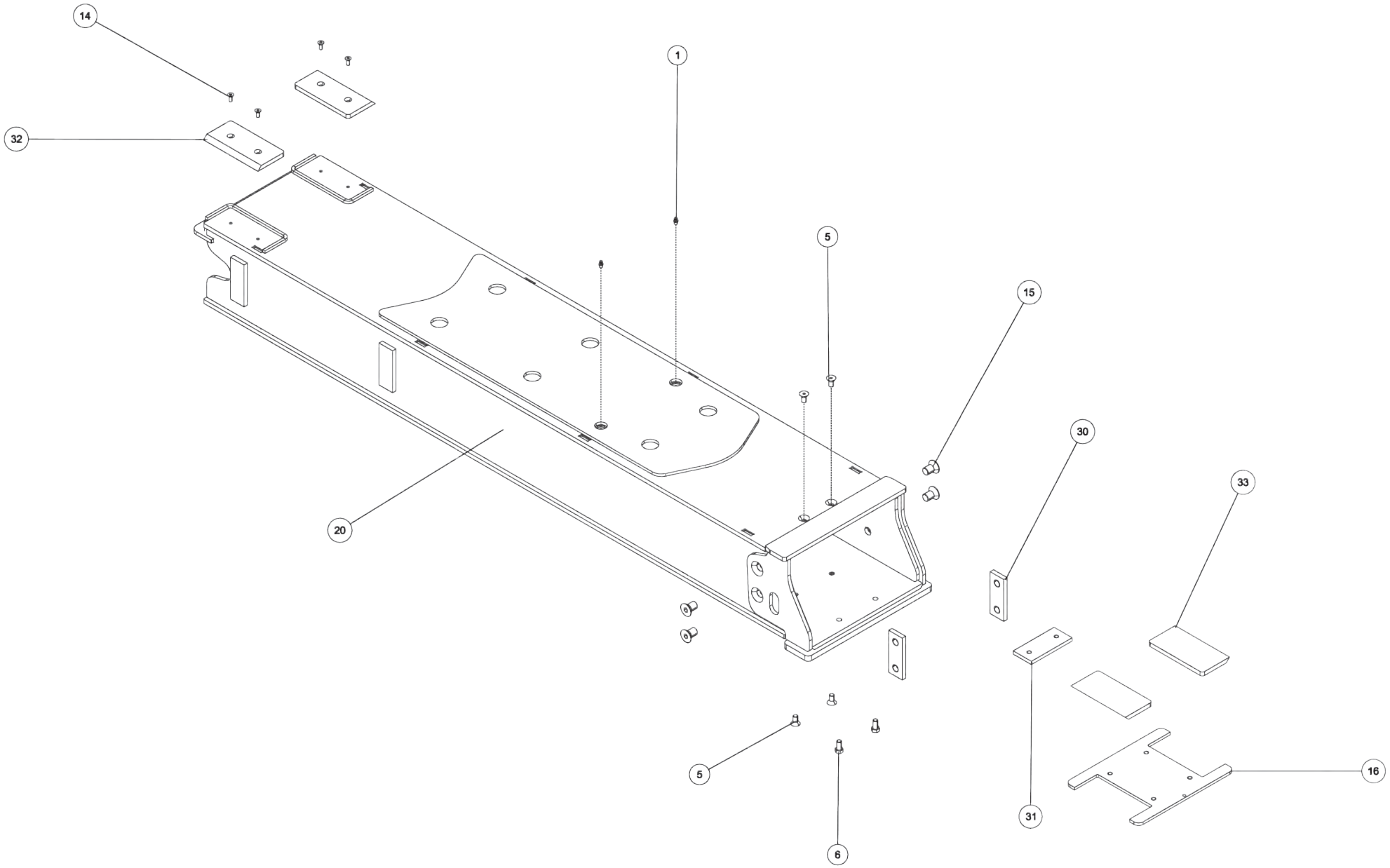

0910787, STINGER ASSY - EURO - 144" (cont'd)

ITEM	PART NUMBER	DESCRIPTION	QTY
--	0910787	STINGER ASSY - EURO - 144"	
1	0300113	GREASE FITTING, 1/4-28 STR	4
2	0301895	GREASE FITTING, 1/8 STR PTF	4
3	0301959	SNAP RING-INTERNAL 1-1/2	1
4	0313329	7/8X6 1/2 LG HITCH PIN	1
5	0400134	SCREW, 3/8-24X3/4 FHS	6
6	0400151	SCREW, 3/8-24X3/4 HHC GR5	4
7	0400176	SCREW, 1/2-13X1 HHC GR5	1
8	0400177	SCREW, 1/2-13X1-1/4 HHC GR5	1
9	0400248	SCREW, 5/8-11X1 HHC GR8	1
10	0400491	LKWASHER, 1/2	2
11	0400492	USS FLAT WASHER, 1/2	2
12	0400503	WASHER, 5/8 GR8	1
13	0400508	LKWASHER, 5/8	6
14	0400594	SCREW, 1/4-20X5/8 FHS	8
15	0401009	SCREW, 5/8-18X1 FHS	4
16	0723463	PLATE, PAD RETAINER	1
17	0723476	PLATE, PAD RETAINER	1
18	0724348	PIN, EXT CYL REAR MTG -STINGER	1
19	0724694	PLATE - ALUMINUM DRESS-UP	1
20	0807741	1ST STAGE STINGER WELD'T 144"	1
21	0807742	FOLDING BOOM WELD'T 144"	1
22	0807969	2ND STAGE STINGER WELDMENT	1
23	9012510	CONNECTOR 6SAE MALE-3/8	2
24	9040602	5/8NC X 1 1/4 HHCS GR 8	1
25	9044471	5/8-18 X 1 1/4 HHCS PL GR8	4
26	9046315	3/16 DIAX1 3/4LG ROLL PI	2
27	915760022	HYD.TUBE 3/8 STINGER EX	1
28	915760023	HYD.TUBE 3/8 STINGER EX	1
29	924902000	LOWER PIN WELD'T	1
30	930150001	STOP PAD (FOLDING BOOM)	4
31	930150002	SPACER (1ST STAGE STINGE	1
32	930150003	TOP PADS	4
33	930150004	BOTTOM PADS	4
34	930150011	PIN (CYL STIFFENER PLATE	1
35	930152000	FRONT MTG. PIN WELD'T	1
36	930775500	TWIN CYL. ARR'MENT-EURO.NEW	1
37	930901500	SHAFT WELD'T - FOLD.BOOM PIVOT	1
38	945300000	PIVOT FOOT WELDMENT	1
39	945351000	SHAFT WELDT-FOLDING BOOM PIVOT	1

0910787, STINGER ASSY - EURO - 144" (cont'd)

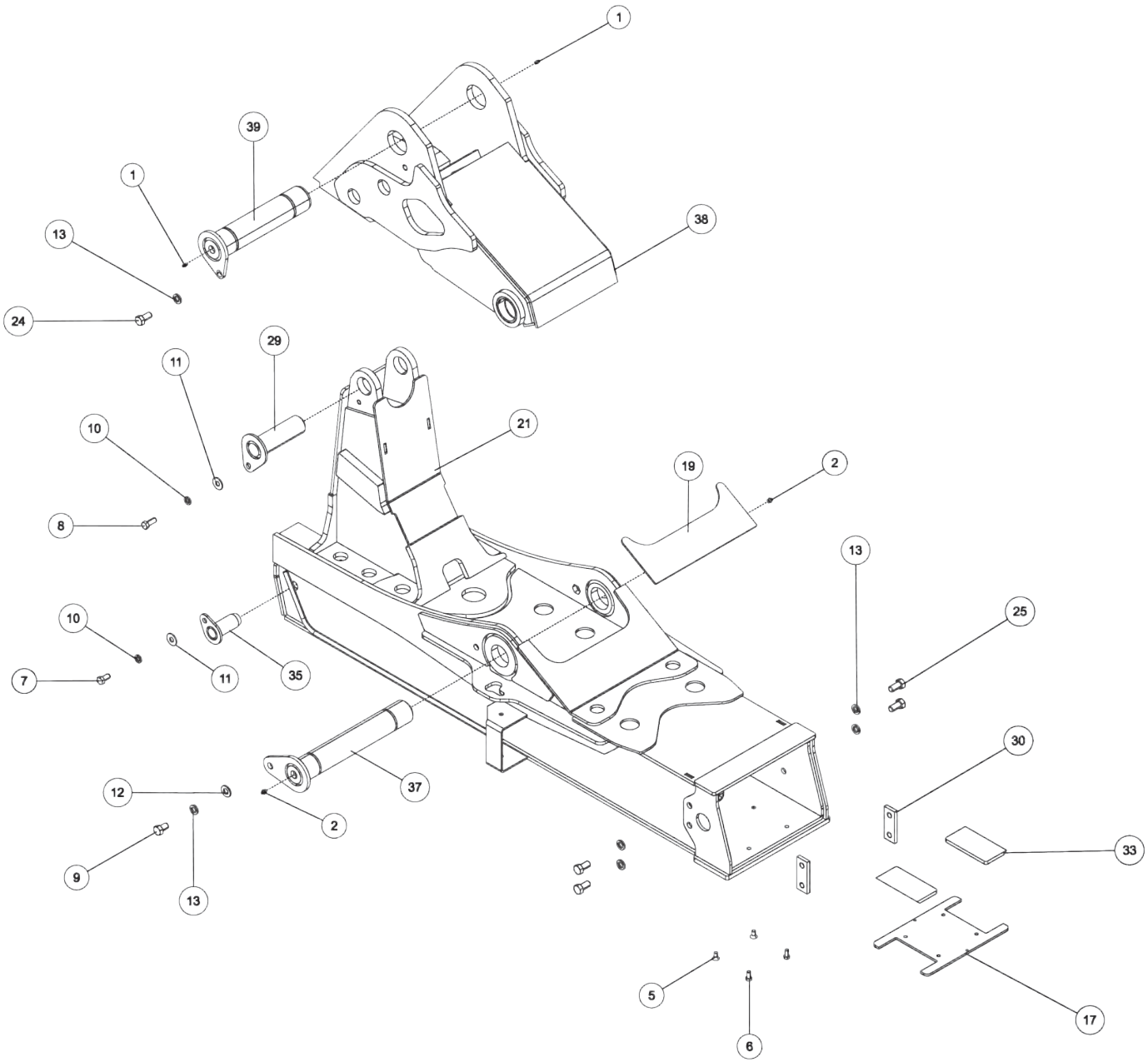

0910787, STINGER ASSY - EURO - 144" (cont'd)

ITEM	PART NUMBER	DESCRIPTION	QTY
--	0910787	STINGER ASSY - EURO - 144"	
1	0300113	GREASE FITTING, 1/4-28 STR	4
2	0301895	GREASE FITTING, 1/8 STR PTF	4
3	0301959	SNAP RING-INTERNAL 1-1/2	1
4	0313329	7/8X6 1/2 LG HITCH PIN	1
5	0400134	SCREW, 3/8-24X3/4 FHS	6
6	0400151	SCREW, 3/8-24X3/4 HHC GR5	4
7	0400176	SCREW, 1/2-13X1 HHC GR5	1
8	0400177	SCREW, 1/2-13X1-1/4 HHC GR5	1
9	0400248	SCREW, 5/8-11X1 HHC GR8	1
10	0400491	LKWASHER, 1/2	2
11	0400492	USS FLAT WASHER, 1/2	2
12	0400503	WASHER, 5/8 GR8	1
13	0400508	LKWASHER, 5/8	6
14	0400594	SCREW, 1/4-20X5/8 FHS	8
15	0401009	SCREW, 5/8-18X1 FHS	4
16	0723463	PLATE, PAD RETAINER	1
17	0723476	PLATE, PAD RETAINER	1
18	0724348	PIN, EXT CYL REAR MTG -STINGER	1
19	0724694	PLATE - ALUMINUM DRESS-UP	1
20	0807741	1ST STAGE STINGER WELD'T 144"	1
21	0807742	FOLDING BOOM WELD'T 144"	1
22	0807969	2ND STAGE STINGER WELDMENT	1
23	9012510	CONNECTOR 6SAE MALE-3/8	2
24	9040602	5/8NC X 1 1/4 HHCS GR 8	1
25	9044471	5/8-18 X 1 1/4 HHCS PL GR8	4
26	9046315	3/16 DIAX1 3/4LG ROLL PI	2
27	915760022	HYD.TUBE 3/8 STINGER EX	1
28	915760023	HYD.TUBE 3/8 STINGER EX	1
29	924902000	LOWER PIN WELD'T	1
30	930150001	STOP PAD (FOLDING BOOM)	4
31	930150002	SPACER (1ST STAGE STINGE	1
32	930150003	TOP PADS	4
33	930150004	BOTTOM PADS	4
34	930150011	PIN (CYL STIFFENER PLATE	1
35	930152000	FRONT MTG. PIN WELD'T	1
36	930775500	TWIN CYL. ARR'MENT-EURO.NEW	1
37	930901500	SHAFT WELD'T - FOLD.BOOM PIVOT	1
38	945300000	PIVOT FOOT WELDMENT	1
39	945351000	SHAFT WELDT-FOLDING BOOM PIVOT	1

0911010, RECOVERY BOOM INSTALL V-70

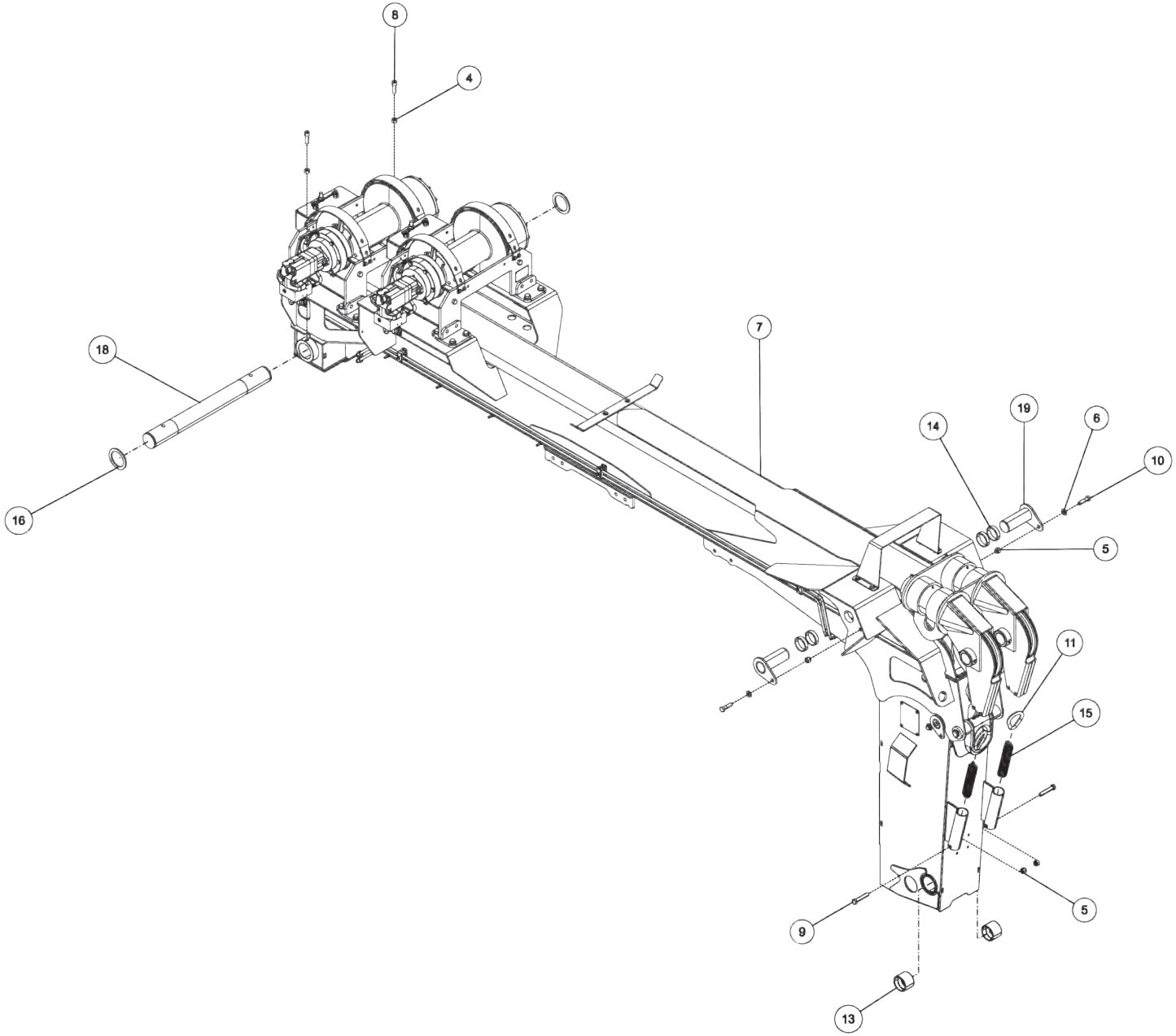

0911010, RECOVERY BOOM INSTALL V-70 (cont'd)

ITEM	PART NUMBER	DESCRIPTION	QTY
--	0911010	RECOVERY BOOM INSTALL V-70	
1	0301522	ADAPTER, 6MJ-6MB	2
2	0301696	FITTING, ELB 90 DEG 6MJ-6FJX90	2
3	0310832	CYLINDER, 6.5 BORE	1
4	0400424	NUT, 5/8-18 HEX	2
5	0400426	NUT, 5/8-11 LOK GR8	4
6	0400505	WASHER, 5/8 SAE	2
7	0911033	RECOVERY BOOM ASSY V-70	1
8	9043605	5/8-18 X 2 SOC HD CAP	2
9	9043975	H.H.C.SCREW 5/8N.C.X3 1/2	2
10	9044409	SCREW, 5/8-11X2-1/4 HHC GR8 YZ	2
11	9048800	5/8 WELDLESS CHAIN LINK	2
12	930290001	STOP BLOCK VERT BOOM WEL	2
13	9400004	BRONZE BUSHING	2
14	945020001	WASHER PLATE-LOWER LIFT	4
15	945030007	CABLE TIE BACK SPRING-1	2
16	945040001	SPACER, MAIN BOOM PIVOT	2
17	945291500	LOWER GUIDE PAD WELD'T	2
18	945350001	PIVOT PIN, MAIN BOOM	1
19	945351500	PIN WELD'T LOWER LIFT CY	2

0911010, RECOVERY BOOM INSTALL V-70 (cont'd)

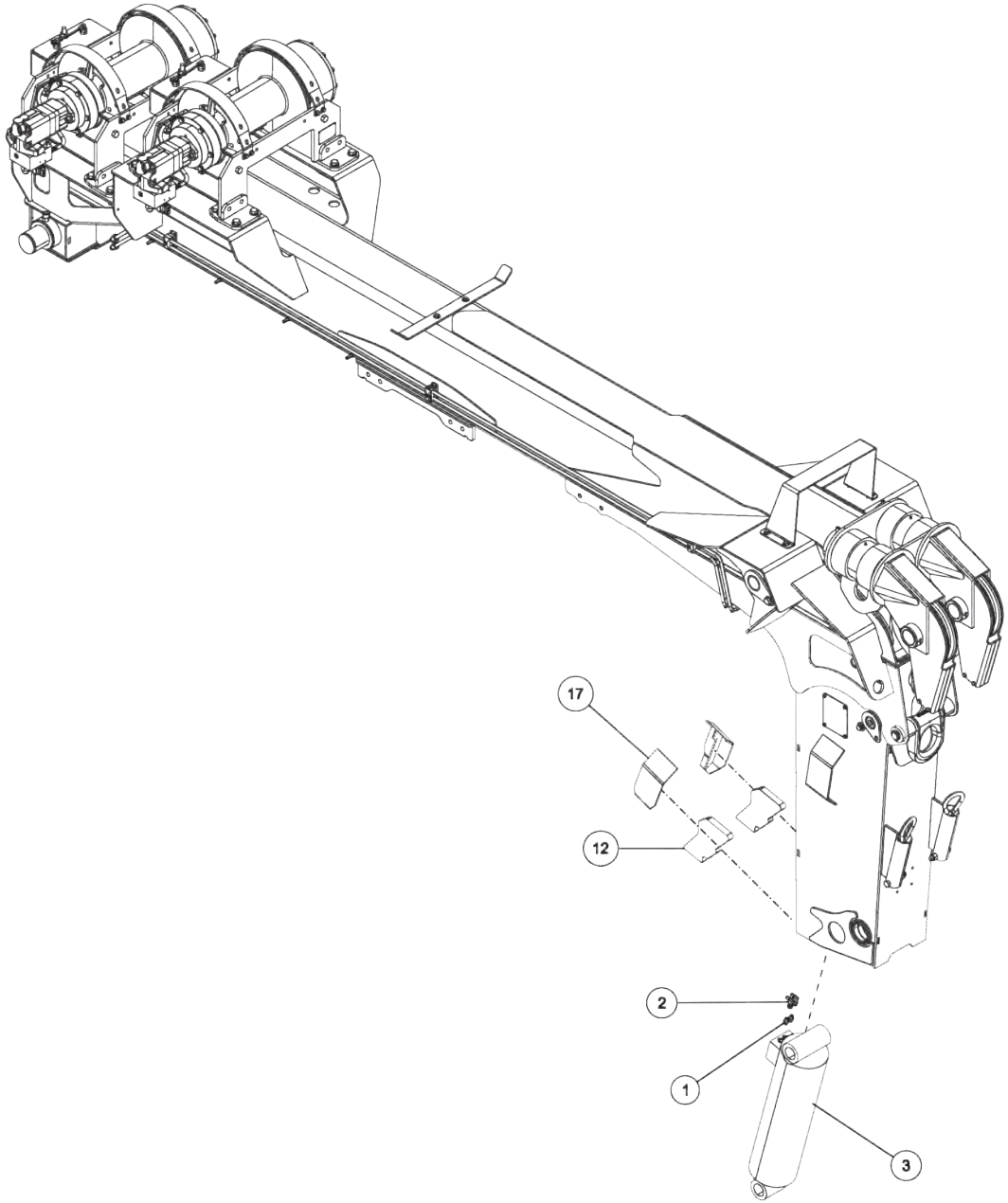

0911010, RECOVERY BOOM INSTALL V-70 (cont'd)

ITEM	PART NUMBER	DESCRIPTION	QTY
--	0911010	RECOVERY BOOM INSTALL V-70	
1	0301522	ADAPTER, 6MJ-6MB	2
2	0301696	FITTING, ELB 90 DEG 6MJ-6FJX90	2
3	0310832	CYLINDER, 6.5 BORE	1
4	0400424	NUT, 5/8-18 HEX	2
5	0400426	NUT, 5/8-11 LOK GR8	4
6	0400505	WASHER, 5/8 SAE	2
7	0911033	RECOVERY BOOM ASSY V-70	1
8	9043605	5/8-18 X 2 SOC HD CAP	2
9	9043975	H.H.C.SCREW 5/8N.C.X3 1/2	2
10	9044409	SCREW, 5/8-11X2-1/4 HHC GR8 YZ	2
11	9048800	5/8 WELDLESS CHAIN LINK	2
12	930290001	STOP BLOCK VERT BOOM WEL	2
13	9400004	BRONZE BUSHING	2
14	945020001	WASHER PLATE-LOWER LIFT	4
15	945030007	CABLE TIE BACK SPRING-1	2
16	945040001	SPACER, MAIN BOOM PIVOT	2
17	945291500	LOWER GUIDE PAD WELD'T	2
18	945350001	PIVOT PIN, MAIN BOOM	1
19	945351500	PIN WELD'T LOWER LIFT CY	2

0911033, RECOVERY BOOM ASSEMBLY V-70

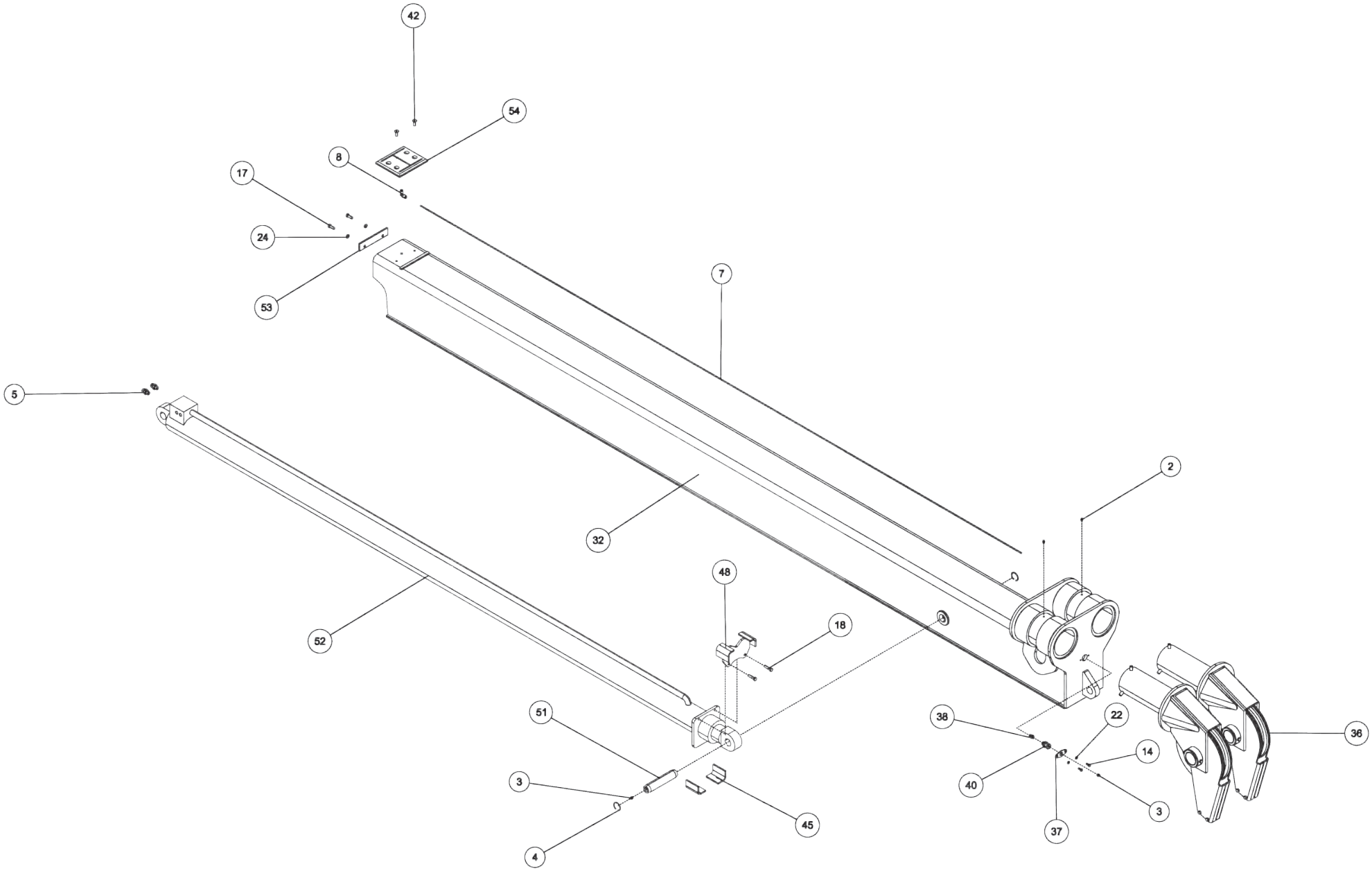

0911033, RECOVERY BOOM ASSEMBLY V-70 (cont'd)

ITEM	PART NUMBER	DESCRIPTION	QTY
--	0911033	RECOVERY BOOM ASSEMBLY V-70	
1	0300041	CONNECTOR, 8MJ-8MB	4
2	0300113	GREASE FITTING, 1/4-28 STR	2
3	0301895	GREASE FITTING, 1/8 STR PTF	2
4	0301959	SNAP RING-INTERNAL 1-1/2	2
5	0302275	FITTING, CONN 8MJ-6MB W/STEP	2
6	0307061	WINCH-35K DP 2-SP N.DRUM W/TEN	2
7	0311460	1/4" GREASE TUBING	14
8	0311575	1/4X1/4 PTC SWIVEL MALE ELBOW	1
9	0311981	TUBE, 1/2" LH BOOM LOWER	1
10	0311982	TUBE, 1/2" LH BOOM UPPER	1
11	0311983	TUBE, 1/2" RH BOOM LOWER	1
12	0311984	TUBE, 1/2" RH BOOM UPPER	1
13	0312312	STAUFF DOUBLE TUBE CLAMP 1/2	8
14	0400059	SCREW, 1/4-20X5/8 HHC GR5	10
15	0400121	SCREW, 3/8-16X3/4 HHC GR5	2
16	0400122	SCREW, 3/8-16X1-1/4 HHC GR5	4
17	0400126	SCREW, 3/8-16X1 HHC GR5	2
18	0400132	SCREW, 3/8-16X1-1/2 HHC GR5	4
19	0400262	SCREW, 5/8-11X2-1/2 HHC GR8	32
20	0400392	NUT, 3/8-16 LOK	6
21	0400426	NUT, 5/8-11 LOK GR8	32
22	0400452	LKWASHER, 1/4	10
23	0400480	WASHER, 3/8	10
24	0400482	LKWASHER, 3/8	4
25	0400491	LKWASHER, 1/2	1
26	0400492	USS FLAT WASHER, 1/2	1
27	0400503	WASHER, 5/8 GR8	64

ITEM	PART NUMBER	DESCRIPTION	QTY
28	0715517	PIN, D-RING OUT BOOM WLMT	1
29	0719585	D-RING, TOWING	1
30	0724343	BAR, CABLE SUPPORT	1
31	0724344	CHANNEL, ROPE GUIDE	1
32	0806861	INNER BOOM WELDMENT V-70	1
33	0810011	WINCH MTG BRKT V-70	8
34	0810326	V70 OUTER BOOM 3 WINCH	1
35	0810492	CHANNEL WELD'T - HOSE GUIDE	1
36	0908424	SWIVEL-BOOM ASSEMBLY	2
37	3012-793001	PLATE - LUBE MTG.	1
38	9010024	FITT, BRASS CONN 1/4T-1/8MP	1
39	9010520	FITTING-ELBOW 1/4T-1/4NPT	2
40	9012552	BULKHEAD ADAPTER 1/8M-1/8F NPT	1
41	9041403	1/2 NC X 1 1/2 HHCS PL GR8	1
42	9044434	3/8-16X1 NC FLAT SOCKET HD CAP	2
43	9056137	RETAINING RING - 1 3/8	2
44	9056150	RETAINING RING - 1 1/2	2
45	915040501	CLAMP PLATE	2
46	920255003	SPACER - LOCK PIN WELD'T	1
47	930100002	LOWER WEAR PAD-RECOVERY	1
48	930105000	SPIDER CLAMP - TOP WELD'T	1
49	930290002	COVER PLATE VERT BOOM MA	2
50	930350002	PIN MAIN BOOM EXT CYL FR	1
51	930350003	PIN MAIN BOOM EXT CYL RE	1
52	930720000	EXTENSION CYLINDER BOOM	1
53	945030001	PAD RETAINING PLATE-UPPE	1
54	945030004	UPPER WEAR PAD-RECOVERY	1
55	945350500	PIN WELD'T-TILT CYL UPPE	1

0911033, RECOVERY BOOM ASSEMBLY V-70 (cont'd)

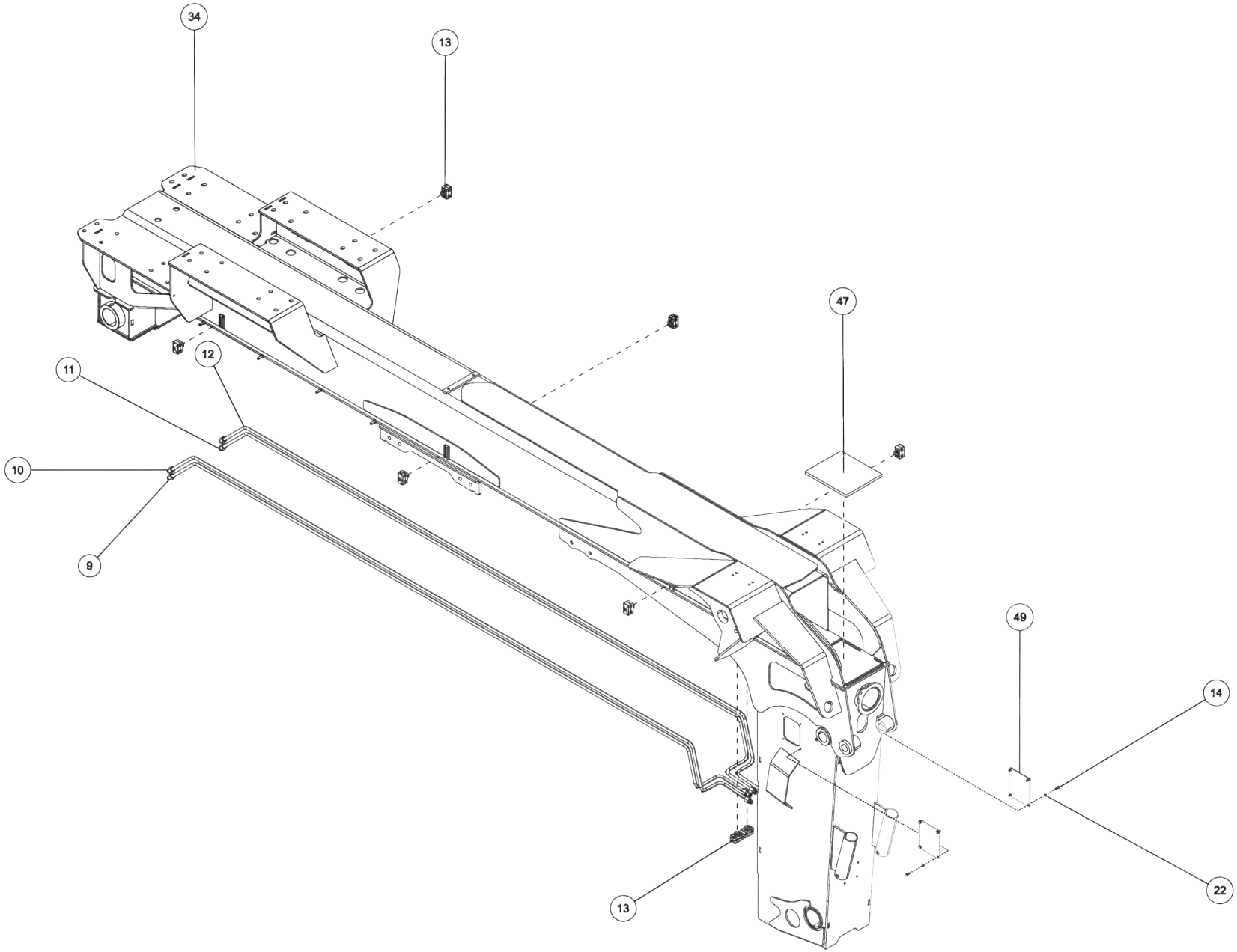

0911033, RECOVERY BOOM ASSEMBLY V-70 (cont'd)

ITEM	PART NUMBER	DESCRIPTION	QTY
--	0911033	RECOVERY BOOM ASSEMBLY V-70	
1	0300041	CONNECTOR, 8MJ-8MB	4
2	0300113	GREASE FITTING, 1/4-28 STR	2
3	0301895	GREASE FITTING, 1/8 STR PTF	2
4	0301959	SNAP RING-INTERNAL 1-1/2	2
5	0302275	FITTING, CONN 8MJ-6MB W/STEP	2
6	0307061	WINCH-35K DP 2-SP N.DRUM W/TEN	2
7	0311460	1/4" GREASE TUBING	14
8	0311575	1/4X1/4 PTC SWIVEL MALE ELBOW	1
9	0311981	TUBE, 1/2" LH BOOM LOWER	1
10	0311982	TUBE, 1/2" LH BOOM UPPER	1
11	0311983	TUBE, 1/2" RH BOOM LOWER	1
12	0311984	TUBE, 1/2" RH BOOM UPPER	1
13	0312312	STAUFF DOUBLE TUBE CLAMP 1/2	8
14	0400059	SCREW, 1/4-20X5/8 HHC GR5	10
15	0400121	SCREW, 3/8-16X3/4 HHC GR5	2
16	0400122	SCREW, 3/8-16X1-1/4 HHC GR5	4
17	0400126	SCREW, 3/8-16X1 HHC GR5	2
18	0400132	SCREW, 3/8-16X1-1/2 HHC GR5	4
19	0400262	SCREW, 5/8-11X2-1/2 HHC GR8	32
20	0400392	NUT, 3/8-16 LOK	6
21	0400426	NUT, 5/8-11 LOK GR8	32
22	0400452	LKWASHER, 1/4	10
23	0400480	WASHER, 3/8	10
24	0400482	LKWASHER, 3/8	4
25	0400491	LKWASHER, 1/2	1
26	0400492	USS FLAT WASHER, 1/2	1
27	0400503	WASHER, 5/8 GR8	64

ITEM	PART NUMBER	DESCRIPTION	QTY
28	0715517	PIN, D-RING OUT BOOM WLMT	1
29	0719585	D-RING, TOWING	1
30	0724343	BAR, CABLE SUPPORT	1
31	0724344	CHANNEL, ROPE GUIDE	1
32	0806861	INNER BOOM WELDMENT V-70	1
33	0810011	WINCH MTG BRKT V-70	8
34	0810326	V70 OUTER BOOM 3 WINCH	1
35	0810492	CHANNEL WELD'T - HOSE GUIDE	1
36	0908424	SWIVEL-BOOM ASSEMBLY	2
37	3012-793001	PLATE - LUBE MTG.	1
38	9010024	FITT, BRASS CONN 1/4T-1/8MP	1
39	9010520	FITTING-ELBOW 1/4T-1/4NPT	2
40	9012552	BULKHEAD ADAPTER 1/8M-1/8F NPT	1
41	9041403	1/2 NC X 1 1/2 HHCS PL GR8	1
42	9044434	3/8-16X1 NC FLAT SOCKET HD CAP	2
43	9056137	RETAINING RING - 1 3/8	2
44	9056150	RETAINING RING - 1 1/2	2
45	915040501	CLAMP PLATE	2
46	920255003	SPACER - LOCK PIN WELD'T	1
47	930100002	LOWER WEAR PAD-RECOVERY	1
48	930105000	SPIDER CLAMP - TOP WELD'T	1
49	930290002	COVER PLATE VERT BOOM MA	2
50	930350002	PIN MAIN BOOM EXT CYL FR	1
51	930350003	PIN MAIN BOOM EXT CYL RE	1
52	930720000	EXTENSION CYLINDER BOOM	1
53	945030001	PAD RETAINING PLATE-UPPE	1
54	945030004	UPPER WEAR PAD-RECOVERY	1
55	945350500	PIN WELD'T-TILT CYL UPPE	1

0911033, RECOVERY BOOM ASSEMBLY V-70 (cont'd)

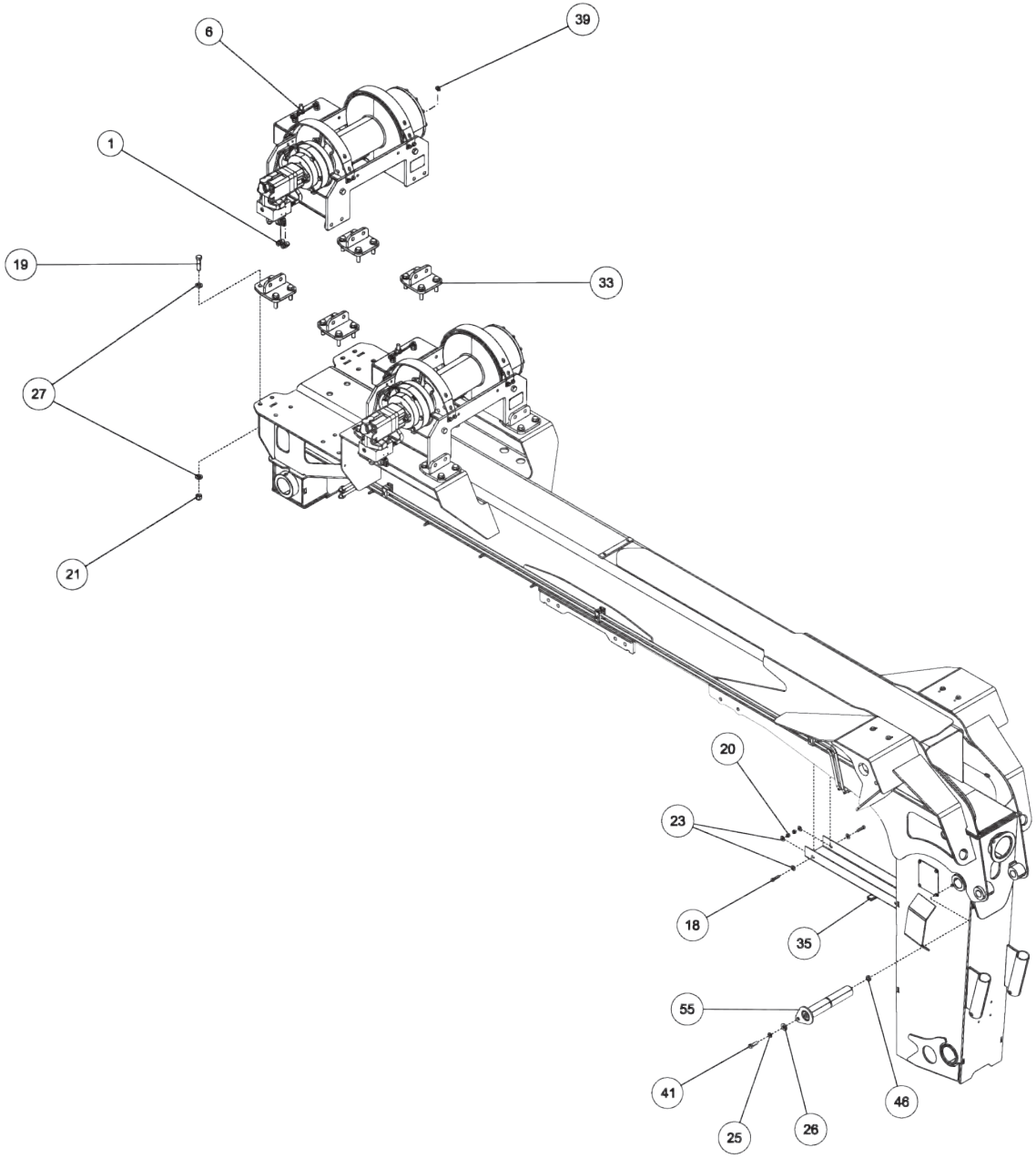

0911033, RECOVERY BOOM ASSEMBLY V-70 (cont'd)

ITEM	PART NUMBER	DESCRIPTION	QTY
--	0911033	RECOVERY BOOM ASSEMBLY V-70	
1	0300041	CONNECTOR, 8MJ-8MB	4
2	0300113	GREASE FITTING, 1/4-28 STR	2
3	0301895	GREASE FITTING, 1/8 STR PTF	2
4	0301959	SNAP RING-INTERNAL 1-1/2	2
5	0302275	FITTING, CONN 8MJ-6MB W/STEP	2
6	0307061	WINCH-35K DP 2-SP N.DRUM W/TEN	2
7	0311460	1/4" GREASE TUBING	14
8	0311575	1/4X1/4 PTC SWIVEL MALE ELBOW	1
9	0311981	TUBE, 1/2" LH BOOM LOWER	1
10	0311982	TUBE, 1/2" LH BOOM UPPER	1
11	0311983	TUBE, 1/2" RH BOOM LOWER	1
12	0311984	TUBE, 1/2" RH BOOM UPPER	1
13	0312312	STAUFF DOUBLE TUBE CLAMP 1/2	8
14	0400059	SCREW, 1/4-20X5/8 HHC GR5	10
15	0400121	SCREW, 3/8-16X3/4 HHC GR5	2
16	0400122	SCREW, 3/8-16X1-1/4 HHC GR5	4
17	0400126	SCREW, 3/8-16X1 HHC GR5	2
18	0400132	SCREW, 3/8-16X1-1/2 HHC GR5	4
19	0400262	SCREW, 5/8-11X2-1/2 HHC GR8	32
20	0400392	NUT, 3/8-16 LOK	6
21	0400426	NUT, 5/8-11 LOK GR8	32
22	0400452	LKWASHER, 1/4	10
23	0400480	WASHER, 3/8	10
24	0400482	LKWASHER, 3/8	4
25	0400491	LKWASHER, 1/2	1
26	0400492	USS FLAT WASHER, 1/2	1
27	0400503	WASHER, 5/8 GR8	64

ITEM	PART NUMBER	DESCRIPTION	QTY
28	0715517	PIN, D-RING OUT BOOM WLMT	1
29	0719585	D-RING, TOWING	1
30	0724343	BAR, CABLE SUPPORT	1
31	0724344	CHANNEL, ROPE GUIDE	1
32	0806861	INNER BOOM WELDMENT V-70	1
33	0810011	WINCH MTG BRKT V-70	8
34	0810326	V70 OUTER BOOM 3 WINCH	1
35	0810492	CHANNEL WELD'T - HOSE GUIDE	1
36	0908424	SWIVEL-BOOM ASSEMBLY	2
37	3012-793001	PLATE - LUBE MTG.	1
38	9010024	FITT, BRASS CONN 1/4T-1/8MP	1
39	9010520	FITTING-ELBOW 1/4T-1/4NPT	2
40	9012552	BULKHEAD ADAPTER 1/8M-1/8F NPT	1
41	9041403	1/2 NC X 1 1/2 HHCS PL GR8	1
42	9044434	3/8-16X1 NC FLAT SOCKET HD CAP	2
43	9056137	RETAINING RING - 1 3/8	2
44	9056150	RETAINING RING - 1 1/2	2
45	915040501	CLAMP PLATE	2
46	920255003	SPACER - LOCK PIN WELD'T	1
47	930100002	LOWER WEAR PAD-RECOVERY	1
48	930105000	SPIDER CLAMP - TOP WELD'T	1
49	930290002	COVER PLATE VERT BOOM MA	2
50	930350002	PIN MAIN BOOM EXT CYL FR	1
51	930350003	PIN MAIN BOOM EXT CYL RE	1
52	930720000	EXTENSION CYLINDER BOOM	1
53	945030001	PAD RETAINING PLATE-UPPE	1
54	945030004	UPPER WEAR PAD-RECOVERY	1
55	945350500	PIN WELD'T-TILT CYL UPPE	1

0911033, RECOVERY BOOM ASSEMBLY V-70 (cont'd)

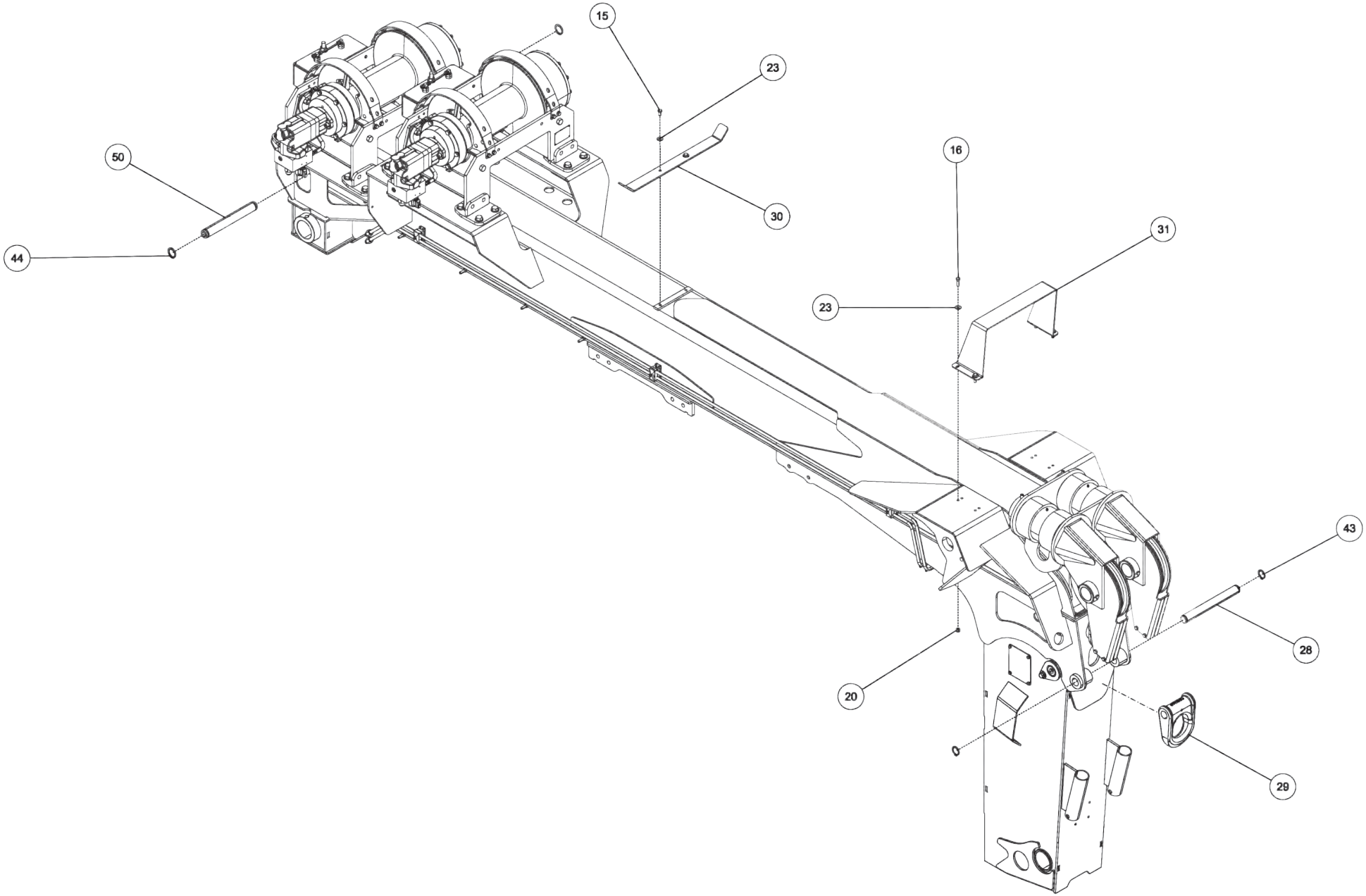

0911033, RECOVERY BOOM ASSEMBLY V-70 (cont'd)

ITEM	PART NUMBER	DESCRIPTION	QTY
--	0911033	RECOVERY BOOM ASSEMBLY V-70	
1	0300041	CONNECTOR, 8MJ-8MB	4
2	0300113	GREASE FITTING, 1/4-28 STR	2
3	0301895	GREASE FITTING, 1/8 STR PTF	2
4	0301959	SNAP RING-INTERNAL 1-1/2	2
5	0302275	FITTING, CONN 8MJ-6MB W/STEP	2
6	0307061	WINCH-35K DP 2-SP N.DRUM W/TEN	2
7	0311460	1/4" GREASE TUBING	14
8	0311575	1/4X1/4 PTC SWIVEL MALE ELBOW	1
9	0311981	TUBE, 1/2" LH BOOM LOWER	1
10	0311982	TUBE, 1/2" LH BOOM UPPER	1
11	0311983	TUBE, 1/2" RH BOOM LOWER	1
12	0311984	TUBE, 1/2" RH BOOM UPPER	1
13	0312312	STAUFF DOUBLE TUBE CLAMP 1/2	8
14	0400059	SCREW, 1/4-20X5/8 HHC GR5	10
15	0400121	SCREW, 3/8-16X3/4 HHC GR5	2
16	0400122	SCREW, 3/8-16X1-1/4 HHC GR5	4
17	0400126	SCREW, 3/8-16X1 HHC GR5	2
18	0400132	SCREW, 3/8-16X1-1/2 HHC GR5	4
19	0400262	SCREW, 5/8-11X2-1/2 HHC GR8	32
20	0400392	NUT, 3/8-16 LOK	6
21	0400426	NUT, 5/8-11 LOK GR8	32
22	0400452	LKWASHER, 1/4	10
23	0400480	WASHER, 3/8	10
24	0400482	LKWASHER, 3/8	4
25	0400491	LKWASHER, 1/2	1
26	0400492	USS FLAT WASHER, 1/2	1
27	0400503	WASHER, 5/8 GR8	64

ITEM	PART NUMBER	DESCRIPTION	QTY
28	0715517	PIN, D-RING OUT BOOM WLMT	1
29	0719585	D-RING, TOWING	1
30	0724343	BAR, CABLE SUPPORT	1
31	0724344	CHANNEL, ROPE GUIDE	1
32	0806861	INNER BOOM WELDMENT V-70	1
33	0810011	WINCH MTG BRKT V-70	8
34	0810326	V70 OUTER BOOM 3 WINCH	1
35	0810492	CHANNEL WELD'T - HOSE GUIDE	1
36	0908424	SWIVEL-BOOM ASSEMBLY	2
37	3012-793001	PLATE - LUBE MTG.	1
38	9010024	FITT, BRASS CONN 1/4T-1/8MP	1
39	9010520	FITTING-ELBOW 1/4T-1/4NPT	2
40	9012552	BULKHEAD ADAPTER 1/8M-1/8F NPT	1
41	9041403	1/2 NC X 1 1/2 HHCS PL GR8	1
42	9044434	3/8-16X1 NC FLAT SOCKET HD CAP	2
43	9056137	RETAINING RING - 1 3/8	2
44	9056150	RETAINING RING - 1 1/2	2
45	915040501	CLAMP PLATE	2
46	920255003	SPACER - LOCK PIN WELD'T	1
47	930100002	LOWER WEAR PAD-RECOVERY	1
48	930105000	SPIDER CLAMP - TOP WELD'T	1
49	930290002	COVER PLATE VERT BOOM MA	2
50	930350002	PIN MAIN BOOM EXT CYL FR	1
51	930350003	PIN MAIN BOOM EXT CYL RE	1
52	930720000	EXTENSION CYLINDER BOOM	1
53	945030001	PAD RETAINING PLATE-UPPE	1
54	945030004	UPPER WEAR PAD-RECOVERY	1
55	945350500	PIN WELD'T-TILT CYL UPPE	1

0908424, SWIVEL-BOOM ASSEMBLY

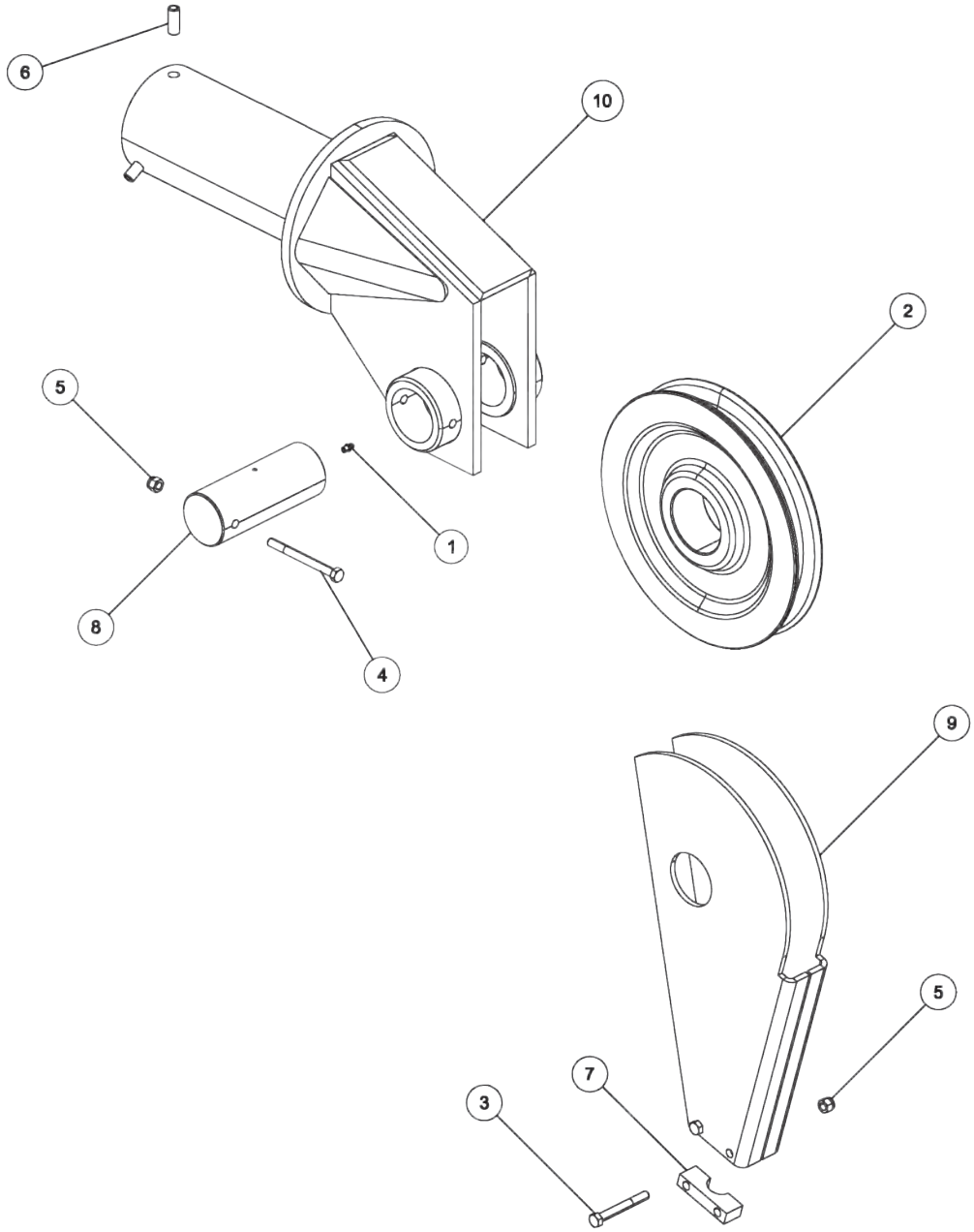

0908424, SWIVEL-BOOM ASSEMBLY (cont'd)

ITEM	PART NUMBER	DESCRIPTION	QTY
--	0908424	SWIVEL-BOOM ASSEMBLY	
1	0300113	GREASE FITTING, 1/4-28 STR	1
2	0300311	SHEAVE, 12-10-1BB 10	1
3	0400133	SCREW, 3/8-16X3 HHC GR5	2
4	0400140	SCREW, 3/8-16X4 HHC GR5	1
5	0400392	NUT, 3/8-16 LOK	3
6	0400557	PIN, 1/2X1-1/4 SPR	3
7	0700511	GUIDE, BOTTOM CABLE	2
8	0700563	SHAFT, SHEAVE	1
9	0802027	GUIDE-CABLE WELDMENT	1
10	0806862	BOOM END SWIVEL WELDMENT V-70	1

0911804, AIR REGULATOR-GAUGE ASSEMBLY

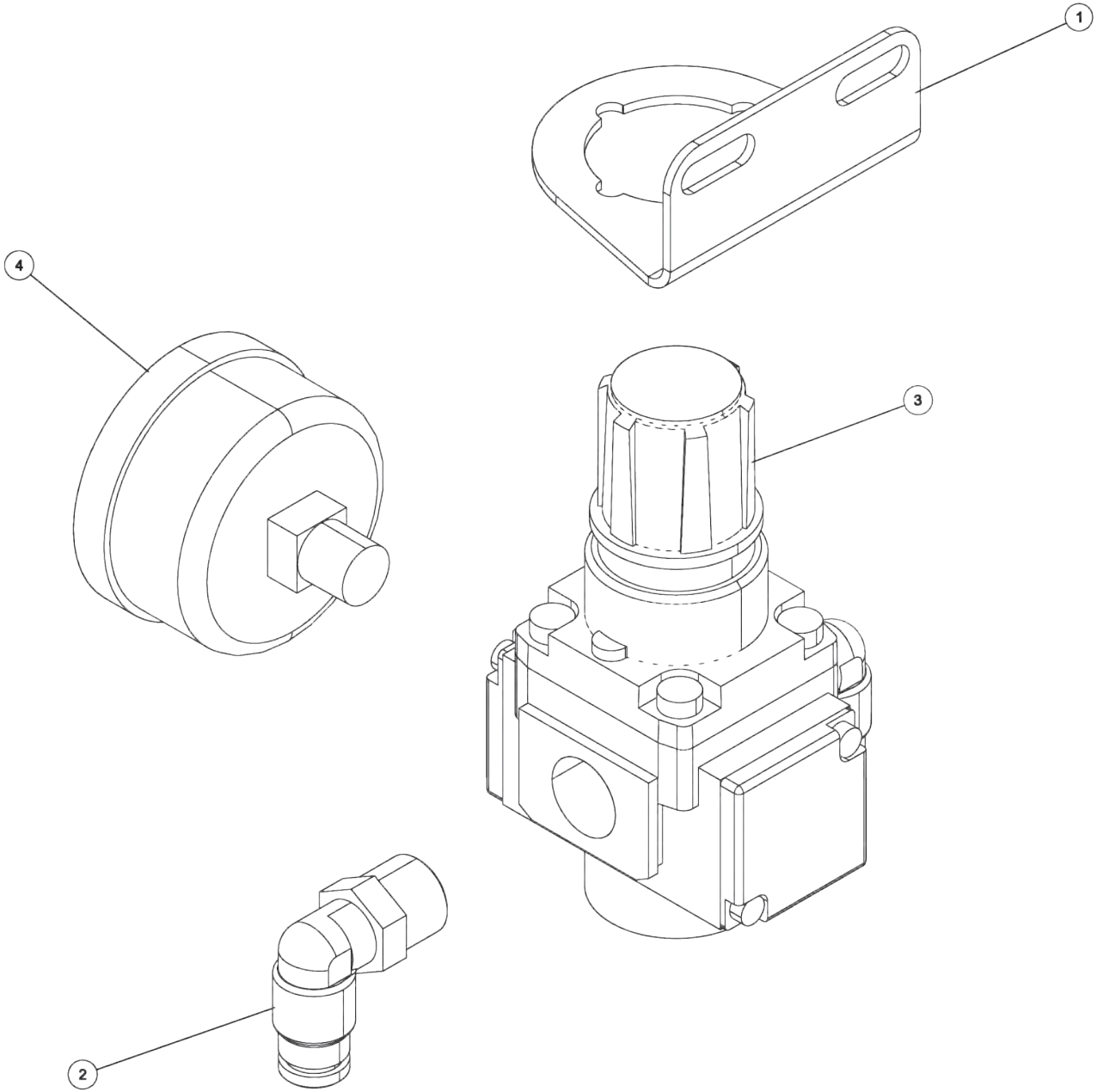

0911804, AIR REGULATOR-GAUGE ASSEMBLY (cont'd)

ITEM	PART NUMBER	DESCRIPTION	QTY
--	0911804	AIR REGULATOR-GAUGE ASSEMBLY	
1	0303365	BRACKET, MOUNTING - AIR PREP	1
2	9010520	FITTING-ELBOW 1/4T-1/4NPT	2
3	HA0131	REGULATOR, AIR	1
4	HA0132	GAUGE 0-160 PSI	1

0912015, SUBFRAME ASSEMBLY V70-100 STD WINCH

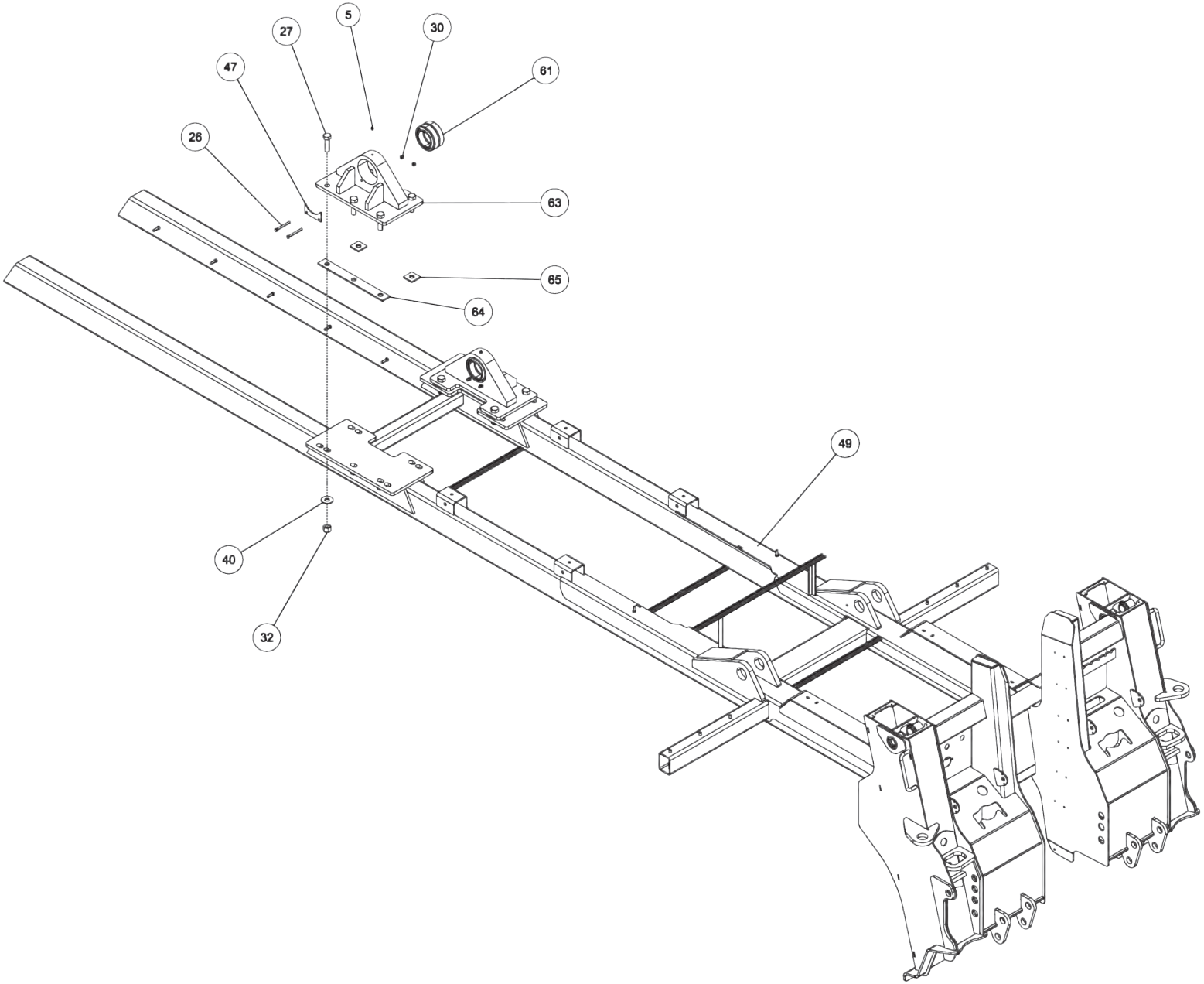

0912015, SUBFRAME ASSEMBLY V70-100 STD WINCH (cont'd)

ITEM	PART NUMBER	DESCRIPTION	QTY
--	0912015	SUBFRAME ASSY V70-100 STDWINCH	
1	0300649	UNION, STRAIGHT 12MJ - 12MJ	2
2	0301445	FITTING, EXTENDED	4
3	0301522	ADAPTER, 6MJ-6MB	3
4	0301620	FITTING, HYD. 6MJ - 6MB90	1
5	0301895	GREASE FITTING, 1/8 STR PTF	4
6	0301959	SNAP RING-INTERNAL 1-1/2	4
7	0302275	FITTING, CONN 8MJ-6MB W/STEP	5
8	0302276	FITTING, ELB 90 DEG	1
9	0302726	GREASE FITTING, 1/4-28 45	16
10	0306700	MANIF. BLOCK DAMAN-AJ2700206S	1
11	0307003	FITT, HYD UNION 10MJ-10MJ	2
12	0310432	FITTING - ADAPTER 16MJ-20MB	2
13	0311971	TUBE ASSY - 1/2	4
14	0311972	TUBE ASSY - 5/8"	2
15	0311973	TUBE ASSY - 3/4	2
16	0311987	TUBE ASSY - 5/8	4
17	0312210	SAFETY SNAP PIN - 1/4	2
18	0312318	FITTING 8MJ - 8MJ90 4	
19	0312319	FITTING 10MJ - 10MJ90	4
20	0312320	FITTING 12MJ - 12MJ90	2
21	0312663	HOSE - 16FJX45-16GMV-16MJ X 57	2
22	0400066	SCREW, 1/4-20X3/4 HHC GR5	8
23	0400070	SCREW, 1/4-20X1 HHC GR5	2
24	0400114	SCREW, 5/16-18X3 HHC GR5	4
25	0400126	SCREW, 3/8-16X1 HHC GR5	8
26	0400130	SCREW, 3/8-16X3-1/2 HHC GR5	4
27	0400306	SCREW, 7/8-9X3 HHC GR8	10
28	0400366	NUT, 1/4-20 HEX	2
29	0400391	NUT, 3/8-16 HEX PL	8
30	0400392	NUT, 3/8-16 LOK	4
31	0400431	NUT, 3/4-10 LOK GR8	12
32	0400437	NUT, 7/8-9 LOK GR8	10
33	0400452	LKWASHER, 1/4	20
34	0400480	WASHER, 3/8	16
35	0400482	LKWASHER, 3/8	8
36	0400490	WASHER, 3/4 GR8	12

ITEM	PART NUMBER	DESCRIPTION	QTY
37	0400491	LKWASHER, 1/2	8
38	0400492	USS FLAT WASHER, 1/2	8
39	0400508	LKWASHER, 5/8	2
40	0400513	WASHER, 7/8	10
41	0400776	NUT, 5/16-18 JAM LOK	4
42	0401021	SCREW, 3/4-10X2 HHC GR8	12
43	0719585	D-RING, TOWING	4
44	0723437	CHANNEL SUPPORT VULCAN	2
45	0724349	PLATE, JACK LEG COVER	2
46	0724499	PIN - UPPER JACK LEG CYL	2
47	0725807	PLATE, BEARING KEEPER	2
48	0810005	PIN - FORK RETAINING	2
49	0810342	SUBFRAME V70V100 3 WINCH	1
50	0911746	HYD TANK ASSY VULC XTRA WINCH	1
51	0912023	CONTROL STATION ASSY STD WINCH	1
52	9015738	HOLDING VALVE MHB-015-L	2
53	9018241	SINGLE TUBE CLAMP-1	2
54	9018254	5/8 TUBE CLAMP SM2160-PP	18
55	9018255	1/2 TUBE CLAMP FM2127-PP	12
56	9018256	3/4 TUBE CLAMP SM3190-PP	6
57	9041010	1/4 NC X 2 1/4 HHCS GR8	2
58	9041011	1/4 NC X 2 1/2 HHCS PL GR8	8
59	9041402	1/2 NC X 1 1/4 HHCS PLT GR8	8
60	9043950	5/8 NC X 1 1/2 HHCS PL GR 8	2
61	9053041	BEARING-SPHERICAL TORRIN	2
62	915770002	8AT2(8T90S-8T90S) HCL	2
63	930202500	PIVOT BLOCK WELD'T	2
64	930202504	TIE PLATE - BOOM PIVOT A	2
65	930202505	WASHER PLATE - BOOM PIVO	4
66	9402970	TOOLBOX MTG. PAD	4
67	945020001	WASHER PLATE-LOWER LIFT	2
68	945351500	PIN WELD'T LOWER LIFT CY	2
69	945720000	JACK LEG CYLINDER - 45/	2
70	946700000	45/50 BOOM LIFT CYLINDER	2
71	946770001	6AT2(6T90S-6T90S) HCL	2
72	GA0215	PIN-"D" RING	4

0912015, SUBFRAME ASSEMBLY V70-100 STD WINCH (cont'd)

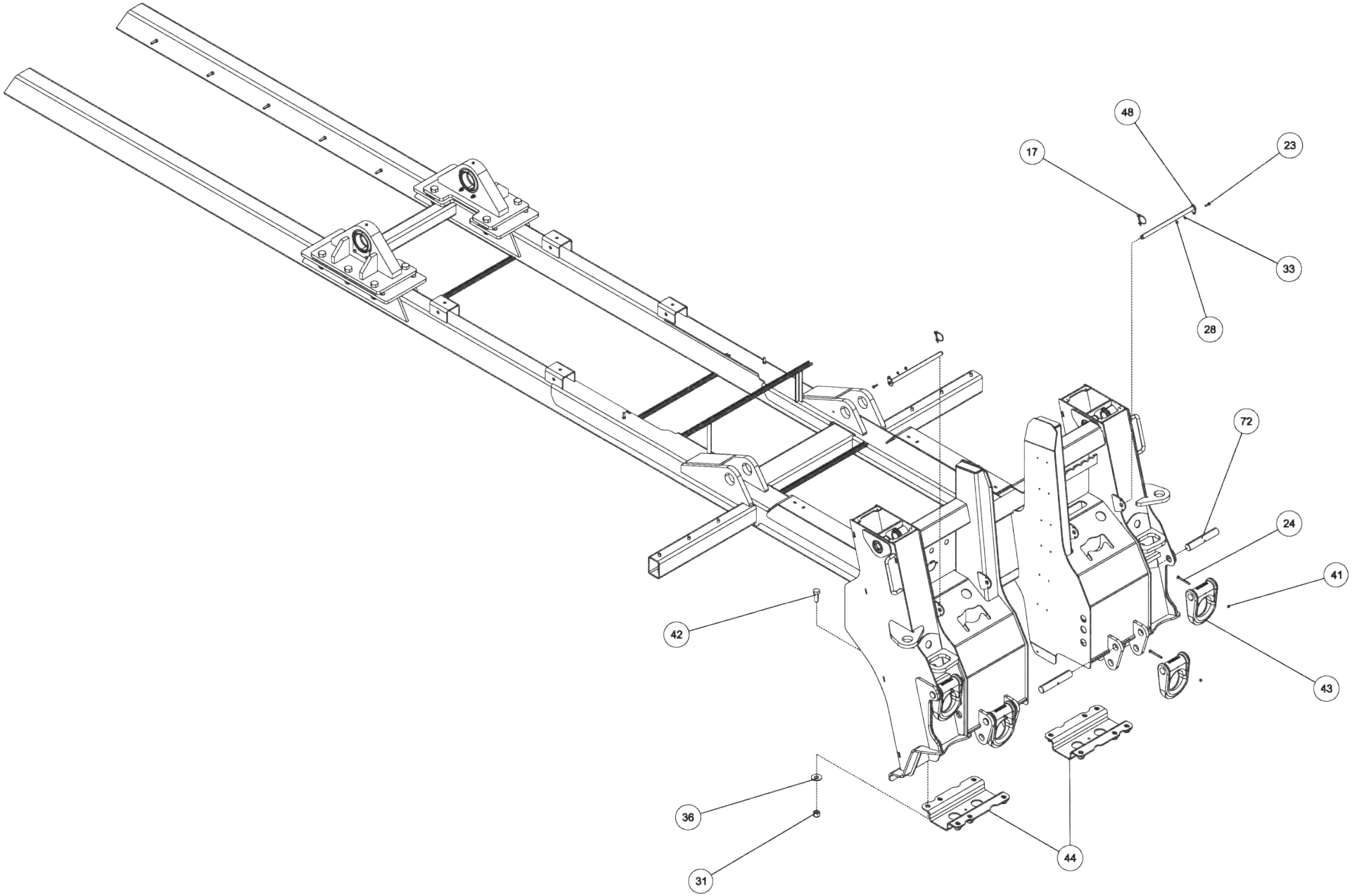

0912015, SUBFRAME ASSEMBLY V70-100 STD WINCH (cont'd)

ITEM	PART NUMBER	DESCRIPTION	QTY
--	0912015	SUBFRAME ASSY V70-100 STDWINCH	
1	0300649	UNION, STRAIGHT 12MJ - 12MJ	2
2	0301445	FITTING, EXTENDED	4
3	0301522	ADAPTER, 6MJ-6MB	3
4	0301620	FITTING, HYD. 6MJ - 6MB90	1
5	0301895	GREASE FITTING, 1/8 STR PTF	4
6	0301959	SNAP RING-INTERNAL 1-1/2	4
7	0302275	FITTING, CONN 8MJ-6MB W/STEP	5
8	0302276	FITTING, ELB 90 DEG	1
9	0302726	GREASE FITTING, 1/4-28 45	16
10	0306700	MANIF. BLOCK DAMAN-AJ2700206S	1
11	0307003	FITT, HYD UNION 10MJ-10MJ	2
12	0310432	FITTING - ADAPTER 16MJ-20MB	2
13	0311971	TUBE ASSY - 1/2	4
14	0311972	TUBE ASSY - 5/8"	2
15	0311973	TUBE ASSY - 3/4	2
16	0311987	TUBE ASSY - 5/8	4
17	0312210	SAFETY SNAP PIN - 1/4	2
18	0312318	FITTING 8MJ - 8MJ90 4	
19	0312319	FITTING 10MJ - 10MJ90	4
20	0312320	FITTING 12MJ - 12MJ90	2
21	0312663	HOSE - 16FJX45-16GMV-16MJ X 57	2
22	0400066	SCREW, 1/4-20X3/4 HHC GR5	8
23	0400070	SCREW, 1/4-20X1 HHC GR5	2
24	0400114	SCREW, 5/16-18X3 HHC GR5	4
25	0400126	SCREW, 3/8-16X1 HHC GR5	8
26	0400130	SCREW, 3/8-16X3-1/2 HHC GR5	4
27	0400306	SCREW, 7/8-9X3 HHC GR8	10
28	0400366	NUT, 1/4-20 HEX	2
29	0400391	NUT, 3/8-16 HEX PL	8
30	0400392	NUT, 3/8-16 LOK	4
31	0400431	NUT, 3/4-10 LOK GR8	12
32	0400437	NUT, 7/8-9 LOK GR8	10
33	0400452	LKWASHER, 1/4	20
34	0400480	WASHER, 3/8	16
35	0400482	LKWASHER, 3/8	8
36	0400490	WASHER, 3/4 GR8	12

ITEM	PART NUMBER	DESCRIPTION	QTY
37	0400491	LKWASHER, 1/2	8
38	0400492	USS FLAT WASHER, 1/2	8
39	0400508	LKWASHER, 5/8	2
40	0400513	WASHER, 7/8	10
41	0400776	NUT, 5/16-18 JAM LOK	4
42	0401021	SCREW, 3/4-10X2 HHC GR8	12
43	0719585	D-RING, TOWING	4
44	0723437	CHANNEL SUPPORT VULCAN	2
45	0724349	PLATE, JACK LEG COVER	2
46	0724499	PIN - UPPER JACK LEG CYL	2
47	0725807	PLATE, BEARING KEEPER	2
48	0810005	PIN - FORK RETAINING	2
49	0810342	SUBFRAME V70V100 3 WINCH	1
50	0911746	HYD TANK ASSY VULC XTRA WINCH	1
51	0912023	CONTROL STATION ASSY STD WINCH	1
52	9015738	HOLDING VALVE MHB-015-L	2
53	9018241	SINGLE TUBE CLAMP-1	2
54	9018254	5/8 TUBE CLAMP SM2160-PP	18
55	9018255	1/2 TUBE CLAMP FM2127-PP	12
56	9018256	3/4 TUBE CLAMP SM3190-PP	6
57	9041010	1/4 NC X 2 1/4 HHCS GR8	2
58	9041011	1/4 NC X 2 1/2 HHCS PL GR8	8
59	9041402	1/2 NC X 1 1/4 HHCS PLT GR8	8
60	9043950	5/8 NC X 1 1/2 HHCS PL GR 8	2
61	9053041	BEARING-SPHERICAL TORRIN	2
62	915770002	8AT2(8T90S-8T90S) HCL	2
63	930202500	PIVOT BLOCK WELD'T	2
64	930202504	TIE PLATE - BOOM PIVOT A	2
65	930202505	WASHER PLATE - BOOM PIVO	4
66	9402970	TOOLBOX MTG. PAD	4
67	945020001	WASHER PLATE-LOWER LIFT	2
68	945351500	PIN WELD'T LOWER LIFT CY	2
69	945720000	JACK LEG CYLINDER - 45/	2
70	946700000	45/50 BOOM LIFT CYLINDER	2
71	946770001	6AT2(6T90S-6T90S) HCL	2
72	GA0215	PIN-"D" RING	4

0912015, SUBFRAME ASSEMBLY V70-100 STD WINCH (cont'd)

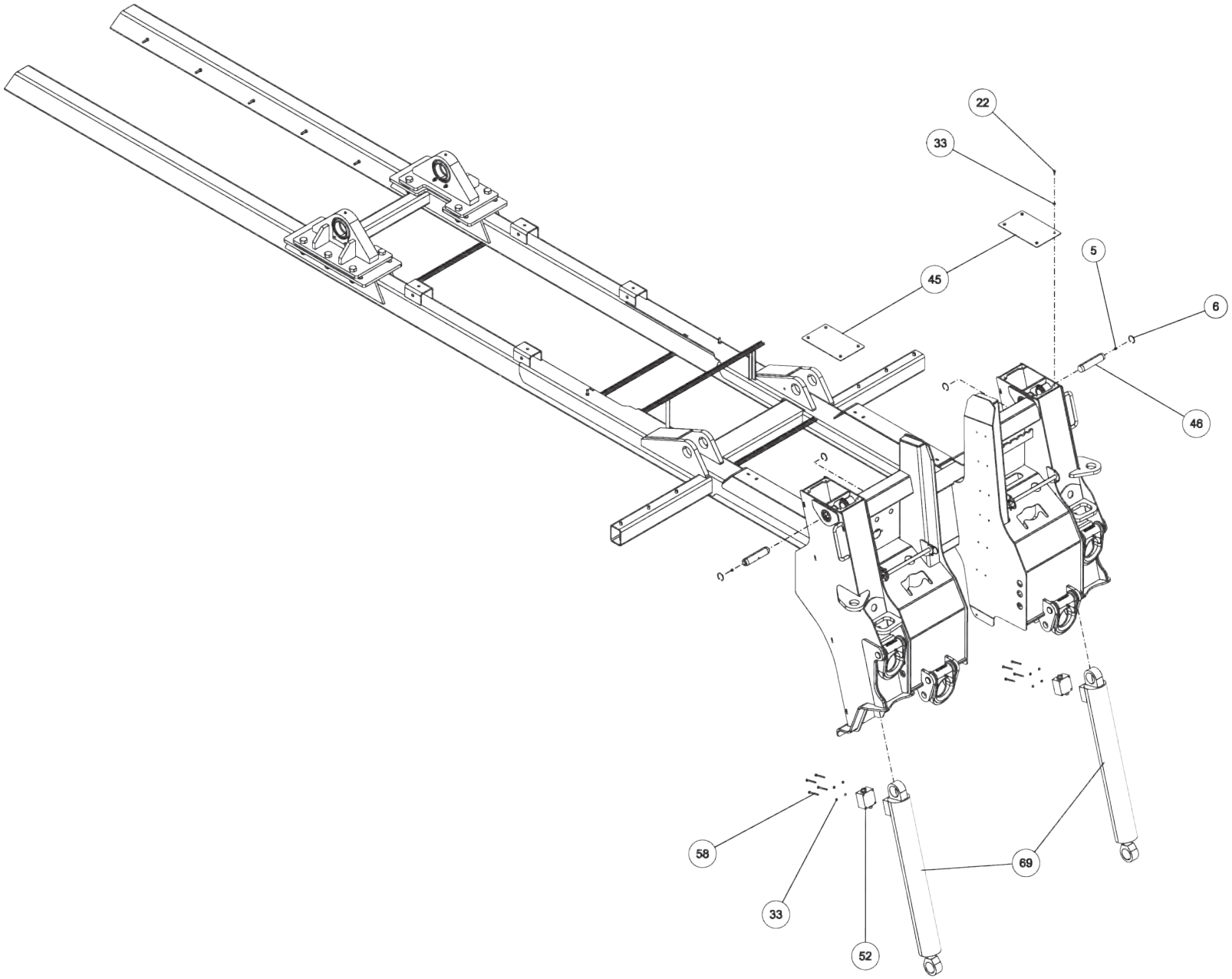

0912015, SUBFRAME ASSEMBLY V70-100 STD WINCH (cont'd)

ITEM	PART NUMBER	DESCRIPTION	QTY
--	0912015	SUBFRAME ASSY V70-100 STDWINCH	
1	0300649	UNION, STRAIGHT 12MJ - 12MJ	2
2	0301445	FITTING, EXTENDED	4
3	0301522	ADAPTER, 6MJ-6MB	3
4	0301620	FITTING, HYD. 6MJ - 6MB90	1
5	0301895	GREASE FITTING, 1/8 STR PTF	4
6	0301959	SNAP RING-INTERNAL 1-1/2	4
7	0302275	FITTING, CONN 8MJ-6MB W/STEP	5
8	0302276	FITTING, ELB 90 DEG	1
9	0302726	GREASE FITTING, 1/4-28 45	16
10	0306700	MANIF. BLOCK DAMAN-AJ2700206S	1
11	0307003	FITT, HYD UNION 10MJ-10MJ	2
12	0310432	FITTING - ADAPTER 16MJ-20MB	2
13	0311971	TUBE ASSY - 1/2	4
14	0311972	TUBE ASSY - 5/8"	2
15	0311973	TUBE ASSY - 3/4	2
16	0311987	TUBE ASSY - 5/8	4
17	0312210	SAFETY SNAP PIN - 1/4	2
18	0312318	FITTING 8MJ - 8MJ90 4	
19	0312319	FITTING 10MJ - 10MJ90	4
20	0312320	FITTING 12MJ - 12MJ90	2
21	0312663	HOSE - 16FJX45-16GMV-16MJ X 57	2
22	0400066	SCREW, 1/4-20X3/4 HHC GR5	8
23	0400070	SCREW, 1/4-20X1 HHC GR5	2
24	0400114	SCREW, 5/16-18X3 HHC GR5	4
25	0400126	SCREW, 3/8-16X1 HHC GR5	8
26	0400130	SCREW, 3/8-16X3-1/2 HHC GR5	4
27	0400306	SCREW, 7/8-9X3 HHC GR8	10
28	0400366	NUT, 1/4-20 HEX	2
29	0400391	NUT, 3/8-16 HEX PL	8
30	0400392	NUT, 3/8-16 LOK	4
31	0400431	NUT, 3/4-10 LOK GR8	12
32	0400437	NUT, 7/8-9 LOK GR8	10
33	0400452	LKWASHER, 1/4	20
34	0400480	WASHER, 3/8	16
35	0400482	LKWASHER, 3/8	8
36	0400490	WASHER, 3/4 GR8	12

ITEM	PART NUMBER	DESCRIPTION	QTY
37	0400491	LKWASHER, 1/2	8
38	0400492	USS FLAT WASHER, 1/2	8
39	0400508	LKWASHER, 5/8	2
40	0400513	WASHER, 7/8	10
41	0400776	NUT, 5/16-18 JAM LOK	4
42	0401021	SCREW, 3/4-10X2 HHC GR8	12
43	0719585	D-RING, TOWING	4
44	0723437	CHANNEL SUPPORT VULCAN	2
45	0724349	PLATE, JACK LEG COVER	2
46	0724499	PIN - UPPER JACK LEG CYL	2
47	0725807	PLATE, BEARING KEEPER	2
48	0810005	PIN - FORK RETAINING	2
49	0810342	SUBFRAME V70V100 3 WINCH	1
50	0911746	HYD TANK ASSY VULC XTRA WINCH	1
51	0912023	CONTROL STATION ASSY STD WINCH	1
52	9015738	HOLDING VALVE MHB-015-L	2
53	9018241	SINGLE TUBE CLAMP-1	2
54	9018254	5/8 TUBE CLAMP SM2160-PP	18
55	9018255	1/2 TUBE CLAMP FM2127-PP	12
56	9018256	3/4 TUBE CLAMP SM3190-PP	6
57	9041010	1/4 NC X 2 1/4 HHCS GR8	2
58	9041011	1/4 NC X 2 1/2 HHCS PL GR8	8
59	9041402	1/2 NC X 1 1/4 HHCS PLT GR8	8
60	9043950	5/8 NC X 1 1/2 HHCS PL GR 8	2
61	9053041	BEARING-SPHERICAL TORRIN	2
62	915770002	8AT2(8T90S-8T90S) HCL	2
63	930202500	PIVOT BLOCK WELD'T	2
64	930202504	TIE PLATE - BOOM PIVOT A	2
65	930202505	WASHER PLATE - BOOM PIVO	4
66	9402970	TOOLBOX MTG. PAD	4
67	945020001	WASHER PLATE-LOWER LIFT	2
68	945351500	PIN WELD'T LOWER LIFT CY	2
69	945720000	JACK LEG CYLINDER - 45/	2
70	946700000	45/50 BOOM LIFT CYLINDER	2
71	946770001	6AT2(6T90S-6T90S) HCL	2
72	GA0215	PIN-"D" RING	4

0912015, SUBFRAME ASSEMBLY V70-100 STD WINCH (cont'd)

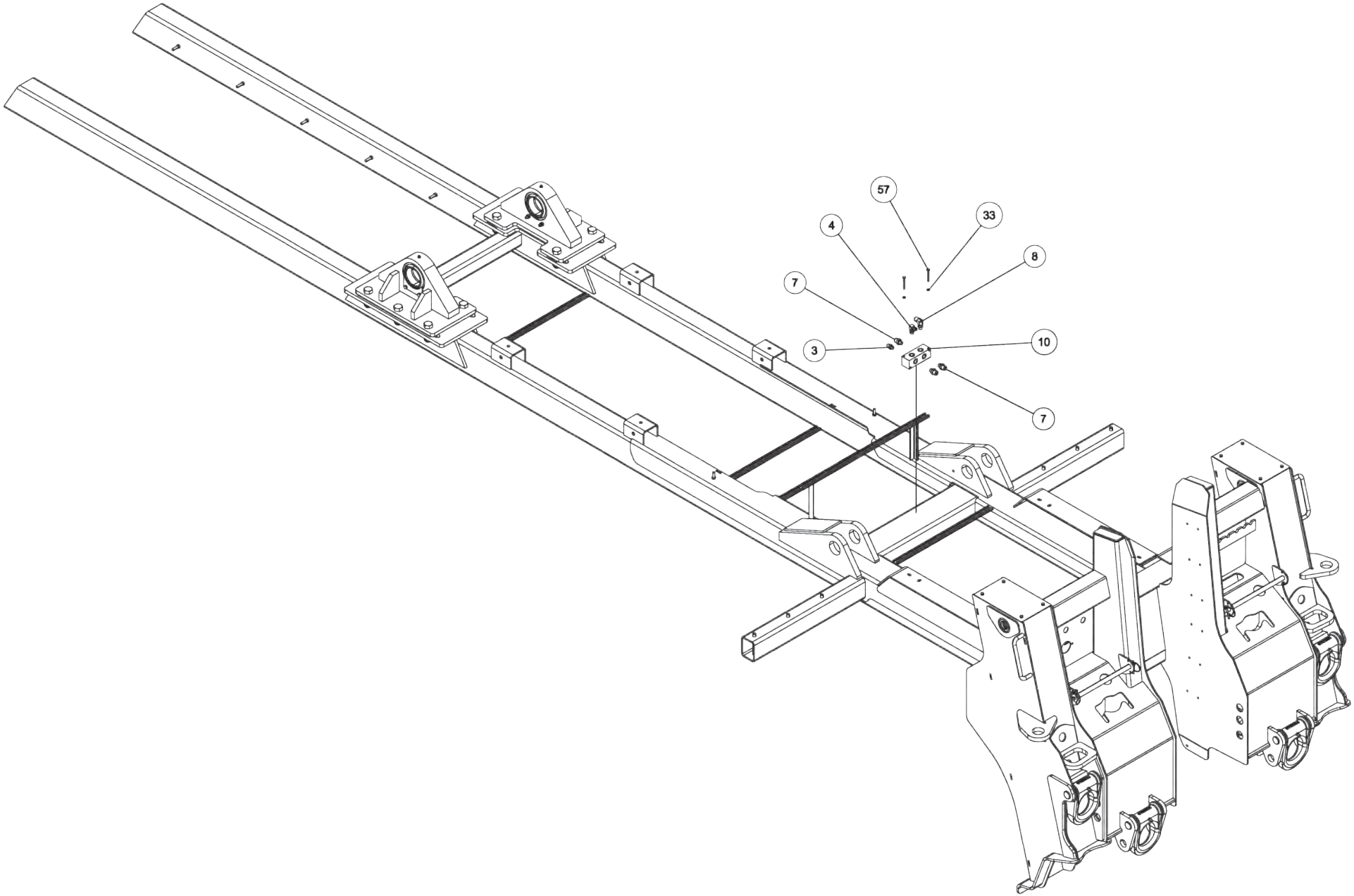

0912015, SUBFRAME ASSEMBLY V70-100 STD WINCH (cont'd)

ITEM	PART NUMBER	DESCRIPTION	QTY
--	0912015	SUBFRAME ASSY V70-100 STDWINCH	
1	0300649	UNION, STRAIGHT 12MJ - 12MJ	2
2	0301445	FITTING, EXTENDED	4
3	0301522	ADAPTER, 6MJ-6MB	3
4	0301620	FITTING, HYD. 6MJ - 6MB90	1
5	0301895	GREASE FITTING, 1/8 STR PTF	4
6	0301959	SNAP RING-INTERNAL 1-1/2	4
7	0302275	FITTING, CONN 8MJ-6MB W/STEP	5
8	0302276	FITTING, ELB 90 DEG	1
9	0302726	GREASE FITTING, 1/4-28 45	16
10	0306700	MANIF. BLOCK DAMAN-AJ2700206S	1
11	0307003	FITT, HYD UNION 10MJ-10MJ	2
12	0310432	FITTING - ADAPTER 16MJ-20MB	2
13	0311971	TUBE ASSY - 1/2	4
14	0311972	TUBE ASSY - 5/8"	2
15	0311973	TUBE ASSY - 3/4	2
16	0311987	TUBE ASSY - 5/8	4
17	0312210	SAFETY SNAP PIN - 1/4	2
18	0312318	FITTING 8MJ - 8MJ90 4	
19	0312319	FITTING 10MJ - 10MJ90	4
20	0312320	FITTING 12MJ - 12MJ90	2
21	0312663	HOSE - 16FJX45-16GMV-16MJ X 57	2
22	0400066	SCREW, 1/4-20X3/4 HHC GR5	8
23	0400070	SCREW, 1/4-20X1 HHC GR5	2
24	0400114	SCREW, 5/16-18X3 HHC GR5	4
25	0400126	SCREW, 3/8-16X1 HHC GR5	8
26	0400130	SCREW, 3/8-16X3-1/2 HHC GR5	4
27	0400306	SCREW, 7/8-9X3 HHC GR8	10
28	0400366	NUT, 1/4-20 HEX	2
29	0400391	NUT, 3/8-16 HEX PL	8
30	0400392	NUT, 3/8-16 LOK	4
31	0400431	NUT, 3/4-10 LOK GR8	12
32	0400437	NUT, 7/8-9 LOK GR8	10
33	0400452	LKWASHER, 1/4	20
34	0400480	WASHER, 3/8	16
35	0400482	LKWASHER, 3/8	8
36	0400490	WASHER, 3/4 GR8	12

ITEM	PART NUMBER	DESCRIPTION	QTY
37	0400491	LKWASHER, 1/2	8
38	0400492	USS FLAT WASHER, 1/2	8
39	0400508	LKWASHER, 5/8	2
40	0400513	WASHER, 7/8	10
41	0400776	NUT, 5/16-18 JAM LOK	4
42	0401021	SCREW, 3/4-10X2 HHC GR8	12
43	0719585	D-RING, TOWING	4
44	0723437	CHANNEL SUPPORT VULCAN	2
45	0724349	PLATE, JACK LEG COVER	2
46	0724499	PIN - UPPER JACK LEG CYL	2
47	0725807	PLATE, BEARING KEEPER	2
48	0810005	PIN - FORK RETAINING	2
49	0810342	SUBFRAME V70V100 3 WINCH	1
50	0911746	HYD TANK ASSY VULC XTRA WINCH	1
51	0912023	CONTROL STATION ASSY STD WINCH	1
52	9015738	HOLDING VALVE MHB-015-L	2
53	9018241	SINGLE TUBE CLAMP-1	2
54	9018254	5/8 TUBE CLAMP SM2160-PP	18
55	9018255	1/2 TUBE CLAMP FM2127-PP	12
56	9018256	3/4 TUBE CLAMP SM3190-PP	6
57	9041010	1/4 NC X 2 1/4 HHCS GR8	2
58	9041011	1/4 NC X 2 1/2 HHCS PL GR8	8
59	9041402	1/2 NC X 1 1/4 HHCS PLT GR8	8
60	9043950	5/8 NC X 1 1/2 HHCS PL GR 8	2
61	9053041	BEARING-SPHERICAL TORRIN	2
62	915770002	8AT2(8T90S-8T90S) HCL	2
63	930202500	PIVOT BLOCK WELD'T	2
64	930202504	TIE PLATE - BOOM PIVOT A	2
65	930202505	WASHER PLATE - BOOM PIVO	4
66	9402970	TOOLBOX MTG. PAD	4
67	945020001	WASHER PLATE-LOWER LIFT	2
68	945351500	PIN WELD'T LOWER LIFT CY	2
69	945720000	JACK LEG CYLINDER - 45/	2
70	946700000	45/50 BOOM LIFT CYLINDER	2
71	946770001	6AT2(6T90S-6T90S) HCL	2
72	GA0215	PIN-"D" RING	4

0912015, SUBFRAME ASSEMBLY V70-100 STD WINCH (cont'd)

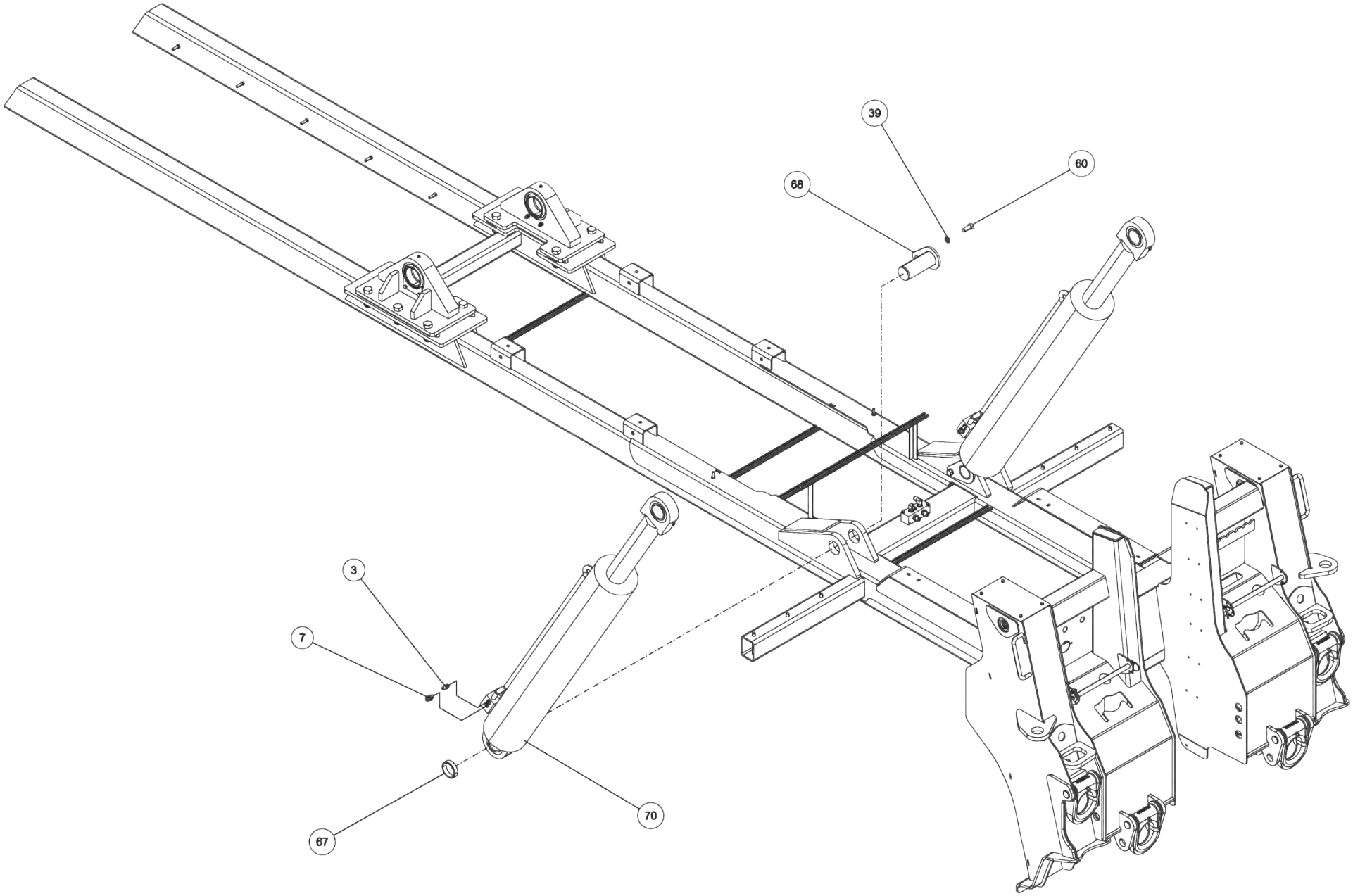

0912015, SUBFRAME ASSEMBLY V70-100 STD WINCH (cont'd)

ITEM	PART NUMBER	DESCRIPTION	QTY
--	0912015	SUBFRAME ASSY V70-100 STDWINCH	
1	0300649	UNION, STRAIGHT 12MJ - 12MJ	2
2	0301445	FITTING, EXTENDED	4
3	0301522	ADAPTER, 6MJ-6MB	3
4	0301620	FITTING, HYD. 6MJ - 6MB90	1
5	0301895	GREASE FITTING, 1/8 STR PTF	4
6	0301959	SNAP RING-INTERNAL 1-1/2	4
7	0302275	FITTING, CONN 8MJ-6MB W/STEP	5
8	0302276	FITTING, ELB 90 DEG	1
9	0302726	GREASE FITTING, 1/4-28 45	16
10	0306700	MANIF. BLOCK DAMAN-AJ2700206S	1
11	0307003	FITT, HYD UNION 10MJ-10MJ	2
12	0310432	FITTING - ADAPTER 16MJ-20MB	2
13	0311971	TUBE ASSY - 1/2	4
14	0311972	TUBE ASSY - 5/8"	2
15	0311973	TUBE ASSY - 3/4	2
16	0311987	TUBE ASSY - 5/8	4
17	0312210	SAFETY SNAP PIN - 1/4	2
18	0312318	FITTING 8MJ - 8MJ90 4	
19	0312319	FITTING 10MJ - 10MJ90	4
20	0312320	FITTING 12MJ - 12MJ90	2
21	0312663	HOSE - 16FJX45-16GMV-16MJ X 57	2
22	0400066	SCREW, 1/4-20X3/4 HHC GR5	8
23	0400070	SCREW, 1/4-20X1 HHC GR5	2
24	0400114	SCREW, 5/16-18X3 HHC GR5	4
25	0400126	SCREW, 3/8-16X1 HHC GR5	8
26	0400130	SCREW, 3/8-16X3-1/2 HHC GR5	4
27	0400306	SCREW, 7/8-9X3 HHC GR8	10
28	0400366	NUT, 1/4-20 HEX	2
29	0400391	NUT, 3/8-16 HEX PL	8
30	0400392	NUT, 3/8-16 LOK	4
31	0400431	NUT, 3/4-10 LOK GR8	12
32	0400437	NUT, 7/8-9 LOK GR8	10
33	0400452	LKWASHER, 1/4	20
34	0400480	WASHER, 3/8	16
35	0400482	LKWASHER, 3/8	8
36	0400490	WASHER, 3/4 GR8	12

ITEM	PART NUMBER	DESCRIPTION	QTY
37	0400491	LKWASHER, 1/2	8
38	0400492	USS FLAT WASHER, 1/2	8
39	0400508	LKWASHER, 5/8	2
40	0400513	WASHER, 7/8	10
41	0400776	NUT, 5/16-18 JAM LOK	4
42	0401021	SCREW, 3/4-10X2 HHC GR8	12
43	0719585	D-RING, TOWING	4
44	0723437	CHANNEL SUPPORT VULCAN	2
45	0724349	PLATE, JACK LEG COVER	2
46	0724499	PIN - UPPER JACK LEG CYL	2
47	0725807	PLATE, BEARING KEEPER	2
48	0810005	PIN - FORK RETAINING	2
49	0810342	SUBFRAME V70V100 3 WINCH	1
50	0911746	HYD TANK ASSY VULC XTRA WINCH	1
51	0912023	CONTROL STATION ASSY STD WINCH	1
52	9015738	HOLDING VALVE MHB-015-L	2
53	9018241	SINGLE TUBE CLAMP-1	2
54	9018254	5/8 TUBE CLAMP SM2160-PP	18
55	9018255	1/2 TUBE CLAMP FM2127-PP	12
56	9018256	3/4 TUBE CLAMP SM3190-PP	6
57	9041010	1/4 NC X 2 1/4 HHCS GR8	2
58	9041011	1/4 NC X 2 1/2 HHCS PL GR8	8
59	9041402	1/2 NC X 1 1/4 HHCS PLT GR8	8
60	9043950	5/8 NC X 1 1/2 HHCS PL GR 8	2
61	9053041	BEARING-SPHERICAL TORRIN	2
62	915770002	8AT2(8T90S-8T90S) HCL	2
63	930202500	PIVOT BLOCK WELD'T	2
64	930202504	TIE PLATE - BOOM PIVOT A	2
65	930202505	WASHER PLATE - BOOM PIVO	4
66	9402970	TOOLBOX MTG. PAD	4
67	945020001	WASHER PLATE-LOWER LIFT	2
68	945351500	PIN WELD'T LOWER LIFT CY	2
69	945720000	JACK LEG CYLINDER - 45/	2
70	946700000	45/50 BOOM LIFT CYLINDER	2
71	946770001	6AT2(6T90S-6T90S) HCL	2
72	GA0215	PIN-"D" RING	4

0912015, SUBFRAME ASSEMBLY V70-100 STD WINCH (cont'd)

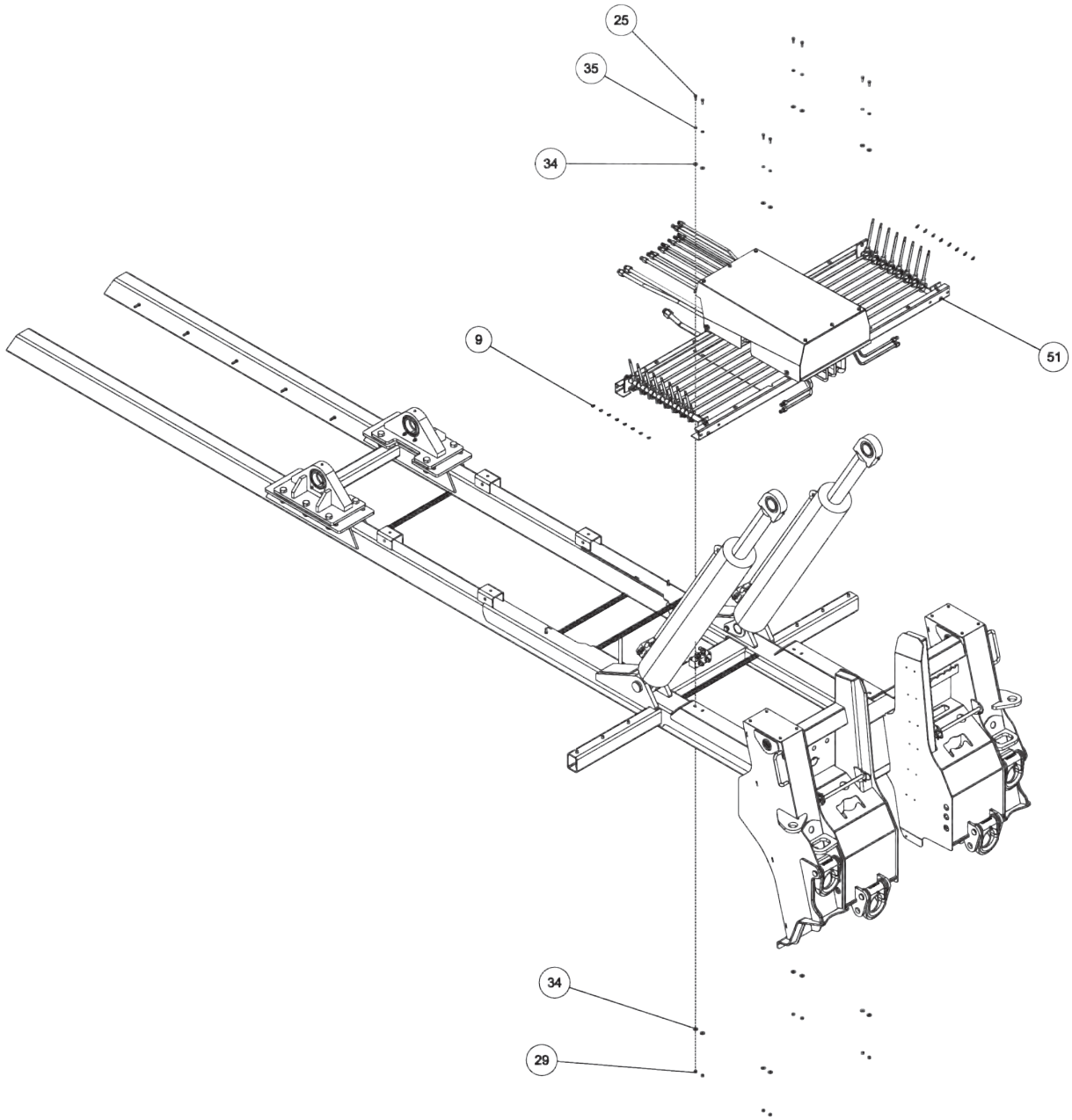

0912015, SUBFRAME ASSEMBLY V70-100 STD WINCH (cont'd)

ITEM	PART NUMBER	DESCRIPTION	QTY
--	0912015	SUBFRAME ASSY V70-100 STDWINCH	
1	0300649	UNION, STRAIGHT 12MJ - 12MJ	2
2	0301445	FITTING, EXTENDED	4
3	0301522	ADAPTER, 6MJ-6MB	3
4	0301620	FITTING, HYD. 6MJ - 6MB90	1
5	0301895	GREASE FITTING, 1/8 STR PTF	4
6	0301959	SNAP RING-INTERNAL 1-1/2	4
7	0302275	FITTING, CONN 8MJ-6MB W/STEP	5
8	0302276	FITTING, ELB 90 DEG	1
9	0302726	GREASE FITTING, 1/4-28 45	16
10	0306700	MANIF. BLOCK DAMAN-AJ2700206S	1
11	0307003	FITT, HYD UNION 10MJ-10MJ	2
12	0310432	FITTING - ADAPTER 16MJ-20MB	2
13	0311971	TUBE ASSY - 1/2	4
14	0311972	TUBE ASSY - 5/8"	2
15	0311973	TUBE ASSY - 3/4	2
16	0311987	TUBE ASSY - 5/8	4
17	0312210	SAFETY SNAP PIN - 1/4	2
18	0312318	FITTING 8MJ - 8MJ90 4	
19	0312319	FITTING 10MJ - 10MJ90	4
20	0312320	FITTING 12MJ - 12MJ90	2
21	0312663	HOSE - 16FJX45-16GMV-16MJ X 57	2
22	0400066	SCREW, 1/4-20X3/4 HHC GR5	8
23	0400070	SCREW, 1/4-20X1 HHC GR5	2
24	0400114	SCREW, 5/16-18X3 HHC GR5	4
25	0400126	SCREW, 3/8-16X1 HHC GR5	8
26	0400130	SCREW, 3/8-16X3-1/2 HHC GR5	4
27	0400306	SCREW, 7/8-9X3 HHC GR8	10
28	0400366	NUT, 1/4-20 HEX	2
29	0400391	NUT, 3/8-16 HEX PL	8
30	0400392	NUT, 3/8-16 LOK	4
31	0400431	NUT, 3/4-10 LOK GR8	12
32	0400437	NUT, 7/8-9 LOK GR8	10
33	0400452	LKWASHER, 1/4	20
34	0400480	WASHER, 3/8	16
35	0400482	LKWASHER, 3/8	8
36	0400490	WASHER, 3/4 GR8	12

ITEM	PART NUMBER	DESCRIPTION	QTY
37	0400491	LKWASHER, 1/2	8
38	0400492	USS FLAT WASHER, 1/2	8
39	0400508	LKWASHER, 5/8	2
40	0400513	WASHER, 7/8	10
41	0400776	NUT, 5/16-18 JAM LOK	4
42	0401021	SCREW, 3/4-10X2 HHC GR8	12
43	0719585	D-RING, TOWING	4
44	0723437	CHANNEL SUPPORT VULCAN	2
45	0724349	PLATE, JACK LEG COVER	2
46	0724499	PIN - UPPER JACK LEG CYL	2
47	0725807	PLATE, BEARING KEEPER	2
48	0810005	PIN - FORK RETAINING	2
49	0810342	SUBFRAME V70V100 3 WINCH	1
50	0911746	HYD TANK ASSY VULC XTRA WINCH	1
51	0912023	CONTROL STATION ASSY STD WINCH	1
52	9015738	HOLDING VALVE MHB-015-L	2
53	9018241	SINGLE TUBE CLAMP-1	2
54	9018254	5/8 TUBE CLAMP SM2160-PP	18
55	9018255	1/2 TUBE CLAMP FM2127-PP	12
56	9018256	3/4 TUBE CLAMP SM3190-PP	6
57	9041010	1/4 NC X 2 1/4 HHCS GR8	2
58	9041011	1/4 NC X 2 1/2 HHCS PL GR8	8
59	9041402	1/2 NC X 1 1/4 HHCS PLT GR8	8
60	9043950	5/8 NC X 1 1/2 HHCS PL GR 8	2
61	9053041	BEARING-SPHERICAL TORRIN	2
62	915770002	8AT2(8T90S-8T90S) HCL	2
63	930202500	PIVOT BLOCK WELD'T	2
64	930202504	TIE PLATE - BOOM PIVOT A	2
65	930202505	WASHER PLATE - BOOM PIVO	4
66	9402970	TOOLBOX MTG. PAD	4
67	945020001	WASHER PLATE-LOWER LIFT	2
68	945351500	PIN WELD'T LOWER LIFT CY	2
69	945720000	JACK LEG CYLINDER - 45/	2
70	946700000	45/50 BOOM LIFT CYLINDER	2
71	946770001	6AT2(6T90S-6T90S) HCL	2
72	GA0215	PIN-"D" RING	4

0912015, SUBFRAME ASSEMBLY V70-100 STD WINCH (cont'd)

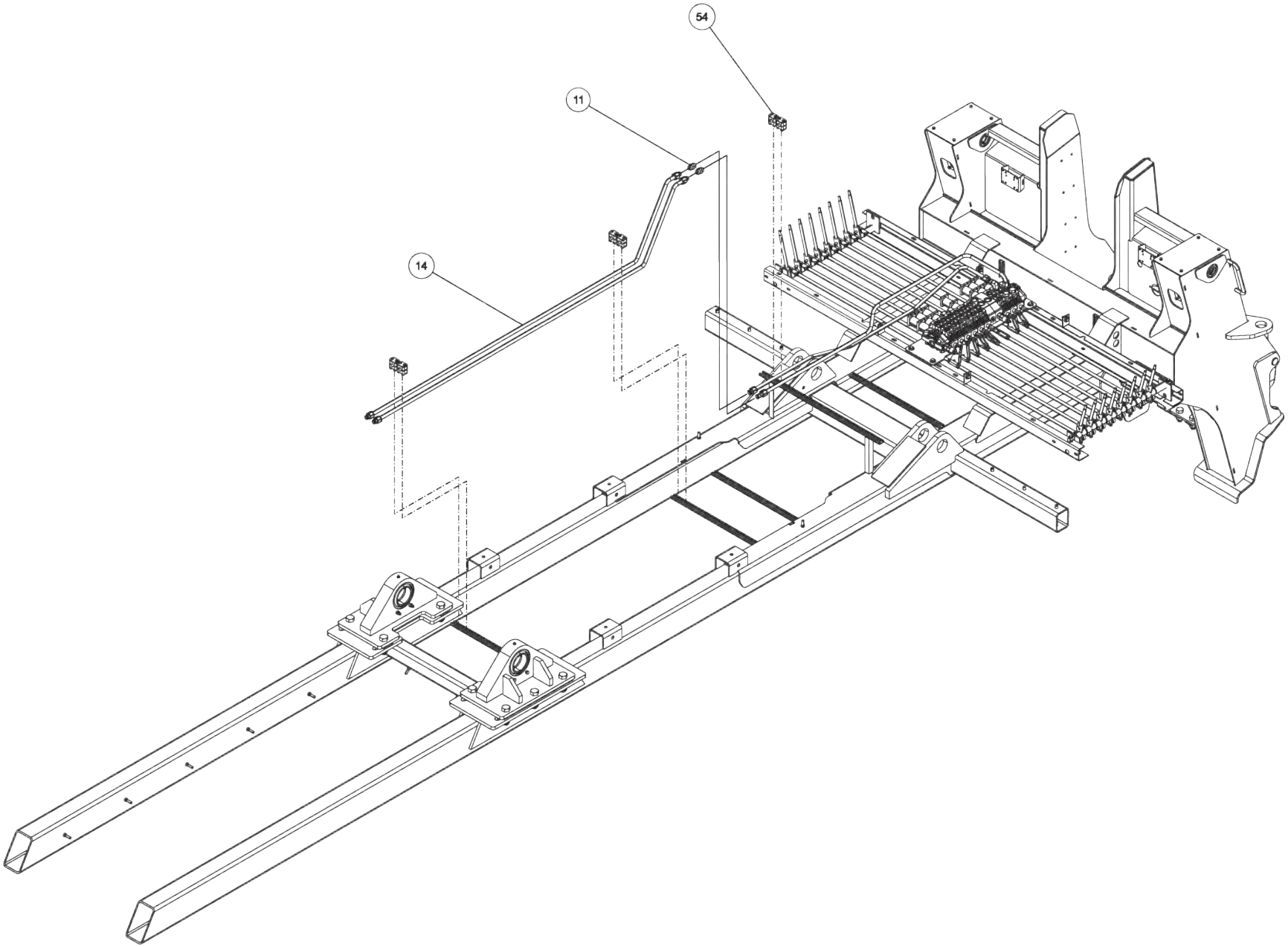

0912015, SUBFRAME ASSEMBLY V70-100 STD WINCH (cont'd)

ITEM	PART NUMBER	DESCRIPTION	QTY
--	0912015	SUBFRAME ASSY V70-100 STDWINCH	
1	0300649	UNION, STRAIGHT 12MJ - 12MJ	2
2	0301445	FITTING, EXTENDED	4
3	0301522	ADAPTER, 6MJ-6MB	3
4	0301620	FITTING, HYD. 6MJ - 6MB90	1
5	0301895	GREASE FITTING, 1/8 STR PTF	4
6	0301959	SNAP RING-INTERNAL 1-1/2	4
7	0302275	FITTING, CONN 8MJ-6MB W/STEP	5
8	0302276	FITTING, ELB 90 DEG	1
9	0302726	GREASE FITTING, 1/4-28 45	16
10	0306700	MANIF. BLOCK DAMAN-AJ2700206S	1
11	0307003	FITT, HYD UNION 10MJ-10MJ	2
12	0310432	FITTING - ADAPTER 16MJ-20MB	2
13	0311971	TUBE ASSY - 1/2	4
14	0311972	TUBE ASSY - 5/8"	2
15	0311973	TUBE ASSY - 3/4	2
16	0311987	TUBE ASSY - 5/8	4
17	0312210	SAFETY SNAP PIN - 1/4	2
18	0312318	FITTING 8MJ - 8MJ90 4	
19	0312319	FITTING 10MJ - 10MJ90	4
20	0312320	FITTING 12MJ - 12MJ90	2
21	0312663	HOSE - 16FJX45-16GMV-16MJ X 57	2
22	0400066	SCREW, 1/4-20X3/4 HHC GR5	8
23	0400070	SCREW, 1/4-20X1 HHC GR5	2
24	0400114	SCREW, 5/16-18X3 HHC GR5	4
25	0400126	SCREW, 3/8-16X1 HHC GR5	8
26	0400130	SCREW, 3/8-16X3-1/2 HHC GR5	4
27	0400306	SCREW, 7/8-9X3 HHC GR8	10
28	0400366	NUT, 1/4-20 HEX	2
29	0400391	NUT, 3/8-16 HEX PL	8
30	0400392	NUT, 3/8-16 LOK	4
31	0400431	NUT, 3/4-10 LOK GR8	12
32	0400437	NUT, 7/8-9 LOK GR8	10
33	0400452	LKWASHER, 1/4	20
34	0400480	WASHER, 3/8	16
35	0400482	LKWASHER, 3/8	8
36	0400490	WASHER, 3/4 GR8	12

ITEM	PART NUMBER	DESCRIPTION	QTY
37	0400491	LKWASHER, 1/2	8
38	0400492	USS FLAT WASHER, 1/2	8
39	0400508	LKWASHER, 5/8	2
40	0400513	WASHER, 7/8	10
41	0400776	NUT, 5/16-18 JAM LOK	4
42	0401021	SCREW, 3/4-10X2 HHC GR8	12
43	0719585	D-RING, TOWING	4
44	0723437	CHANNEL SUPPORT VULCAN	2
45	0724349	PLATE, JACK LEG COVER	2
46	0724499	PIN - UPPER JACK LEG CYL	2
47	0725807	PLATE, BEARING KEEPER	2
48	0810005	PIN - FORK RETAINING	2
49	0810342	SUBFRAME V70V100 3 WINCH	1
50	0911746	HYD TANK ASSY VULC XTRA WINCH	1
51	0912023	CONTROL STATION ASSY STD WINCH	1
52	9015738	HOLDING VALVE MHB-015-L	2
53	9018241	SINGLE TUBE CLAMP-1	2
54	9018254	5/8 TUBE CLAMP SM2160-PP	18
55	9018255	1/2 TUBE CLAMP FM2127-PP	12
56	9018256	3/4 TUBE CLAMP SM3190-PP	6
57	9041010	1/4 NC X 2 1/4 HHCS GR8	2
58	9041011	1/4 NC X 2 1/2 HHCS PL GR8	8
59	9041402	1/2 NC X 1 1/4 HHCS PLT GR8	8
60	9043950	5/8 NC X 1 1/2 HHCS PL GR 8	2
61	9053041	BEARING-SPHERICAL TORRIN	2
62	915770002	8AT2(8T90S-8T90S) HCL	2
63	930202500	PIVOT BLOCK WELD'T	2
64	930202504	TIE PLATE - BOOM PIVOT A	2
65	930202505	WASHER PLATE - BOOM PIVO	4
66	9402970	TOOLBOX MTG. PAD	4
67	945020001	WASHER PLATE-LOWER LIFT	2
68	945351500	PIN WELD'T LOWER LIFT CY	2
69	945720000	JACK LEG CYLINDER - 45/	2
70	946700000	45/50 BOOM LIFT CYLINDER	2
71	946770001	6AT2(6T90S-6T90S) HCL	2
72	GA0215	PIN-"D" RING	4

0912015, SUBFRAME ASSEMBLY V70-100 STD WINCH (cont'd)

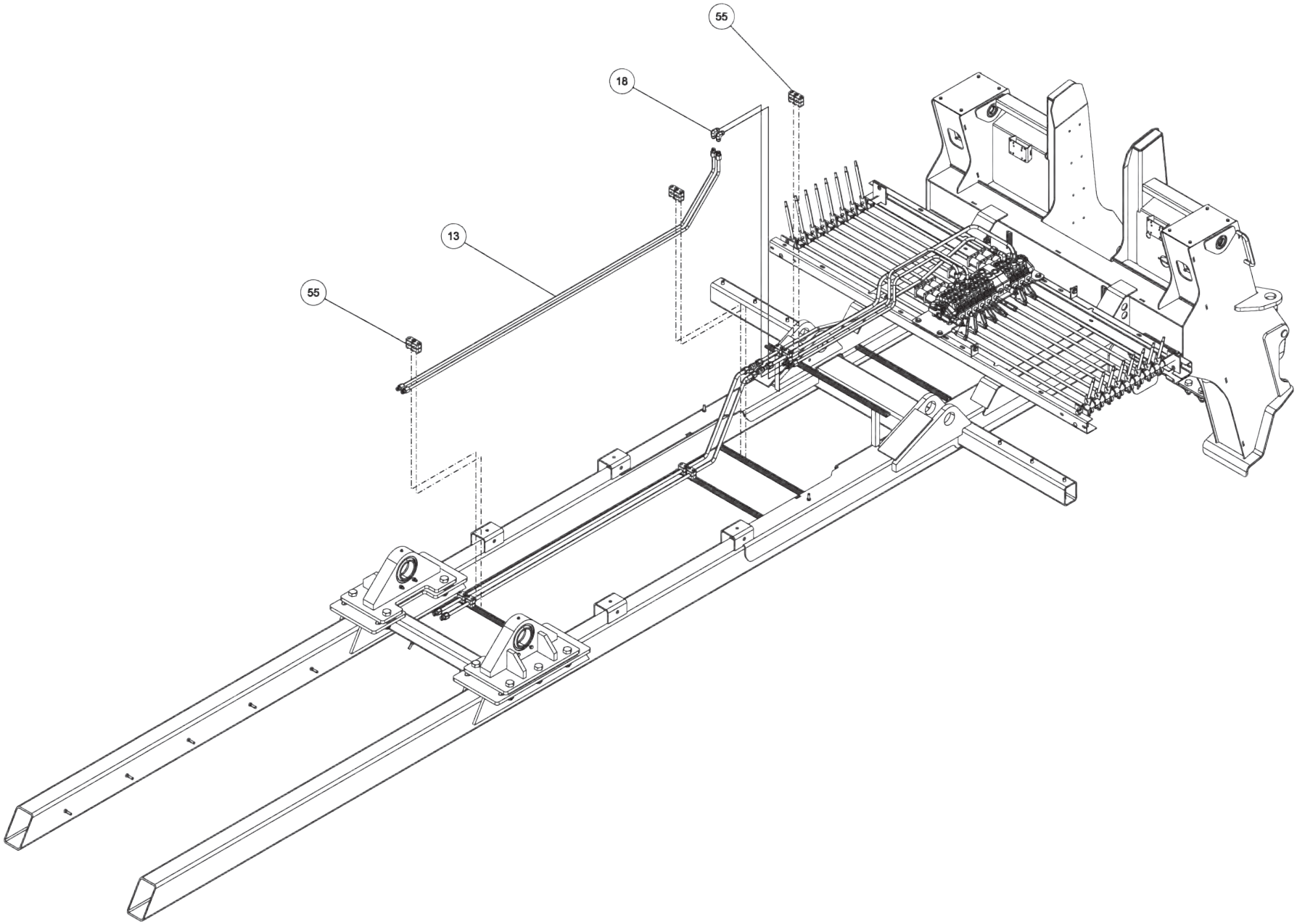

0912015, SUBFRAME ASSEMBLY V70-100 STD WINCH (cont'd)

ITEM	PART NUMBER	DESCRIPTION	QTY
--	0912015	SUBFRAME ASSY V70-100 STDWINCH	
1	0300649	UNION, STRAIGHT 12MJ - 12MJ	2
2	0301445	FITTING, EXTENDED	4
3	0301522	ADAPTER, 6MJ-6MB	3
4	0301620	FITTING, HYD. 6MJ - 6MB90	1
5	0301895	GREASE FITTING, 1/8 STR PTF	4
6	0301959	SNAP RING-INTERNAL 1-1/2	4
7	0302275	FITTING, CONN 8MJ-6MB W/STEP	5
8	0302276	FITTING, ELB 90 DEG	1
9	0302726	GREASE FITTING, 1/4-28 45	16
10	0306700	MANIF. BLOCK DAMAN-AJ2700206S	1
11	0307003	FITT, HYD UNION 10MJ-10MJ	2
12	0310432	FITTING - ADAPTER 16MJ-20MB	2
13	0311971	TUBE ASSY - 1/2	4
14	0311972	TUBE ASSY - 5/8"	2
15	0311973	TUBE ASSY - 3/4	2
16	0311987	TUBE ASSY - 5/8	4
17	0312210	SAFETY SNAP PIN - 1/4	2
18	0312318	FITTING 8MJ - 8MJ90 4	
19	0312319	FITTING 10MJ - 10MJ90	4
20	0312320	FITTING 12MJ - 12MJ90	2
21	0312663	HOSE - 16FJX45-16GMV-16MJ X 57	2
22	0400066	SCREW, 1/4-20X3/4 HHC GR5	8
23	0400070	SCREW, 1/4-20X1 HHC GR5	2
24	0400114	SCREW, 5/16-18X3 HHC GR5	4
25	0400126	SCREW, 3/8-16X1 HHC GR5	8
26	0400130	SCREW, 3/8-16X3-1/2 HHC GR5	4
27	0400306	SCREW, 7/8-9X3 HHC GR8	10
28	0400366	NUT, 1/4-20 HEX	2
29	0400391	NUT, 3/8-16 HEX PL	8
30	0400392	NUT, 3/8-16 LOK	4
31	0400431	NUT, 3/4-10 LOK GR8	12
32	0400437	NUT, 7/8-9 LOK GR8	10
33	0400452	LKWASHER, 1/4	20
34	0400480	WASHER, 3/8	16
35	0400482	LKWASHER, 3/8	8
36	0400490	WASHER, 3/4 GR8	12

ITEM	PART NUMBER	DESCRIPTION	QTY
37	0400491	LKWASHER, 1/2	8
38	0400492	USS FLAT WASHER, 1/2	8
39	0400508	LKWASHER, 5/8	2
40	0400513	WASHER, 7/8	10
41	0400776	NUT, 5/16-18 JAM LOK	4
42	0401021	SCREW, 3/4-10X2 HHC GR8	12
43	0719585	D-RING, TOWING	4
44	0723437	CHANNEL SUPPORT VULCAN	2
45	0724349	PLATE, JACK LEG COVER	2
46	0724499	PIN - UPPER JACK LEG CYL	2
47	0725807	PLATE, BEARING KEEPER	2
48	0810005	PIN - FORK RETAINING	2
49	0810342	SUBFRAME V70V100 3 WINCH	1
50	0911746	HYD TANK ASSY VULC XTRA WINCH	1
51	0912023	CONTROL STATION ASSY STD WINCH	1
52	9015738	HOLDING VALVE MHB-015-L	2
53	9018241	SINGLE TUBE CLAMP-1	2
54	9018254	5/8 TUBE CLAMP SM2160-PP	18
55	9018255	1/2 TUBE CLAMP FM2127-PP	12
56	9018256	3/4 TUBE CLAMP SM3190-PP	6
57	9041010	1/4 NC X 2 1/4 HHCS GR8	2
58	9041011	1/4 NC X 2 1/2 HHCS PL GR8	8
59	9041402	1/2 NC X 1 1/4 HHCS PLT GR8	8
60	9043950	5/8 NC X 1 1/2 HHCS PL GR 8	2
61	9053041	BEARING-SPHERICAL TORRIN	2
62	915770002	8AT2(8T90S-8T90S) HCL	2
63	930202500	PIVOT BLOCK WELD'T	2
64	930202504	TIE PLATE - BOOM PIVOT A	2
65	930202505	WASHER PLATE - BOOM PIVO	4
66	9402970	TOOLBOX MTG. PAD	4
67	945020001	WASHER PLATE-LOWER LIFT	2
68	945351500	PIN WELD'T LOWER LIFT CY	2
69	945720000	JACK LEG CYLINDER - 45/	2
70	946700000	45/50 BOOM LIFT CYLINDER	2
71	946770001	6AT2(6T90S-6T90S) HCL	2
72	GA0215	PIN-"D" RING	4

0912015, SUBFRAME ASSEMBLY V70-100 STD WINCH (cont'd)

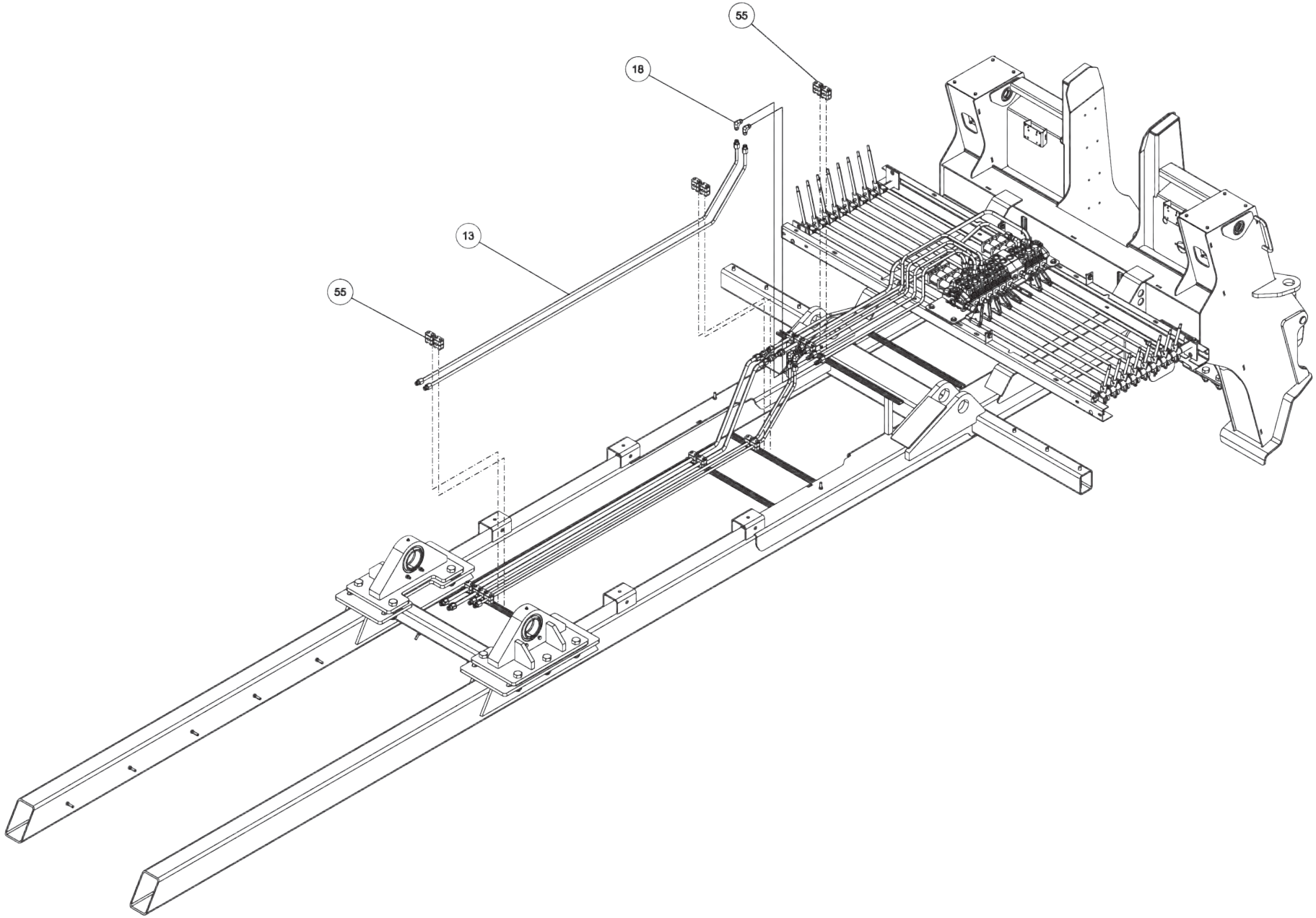

0912015, SUBFRAME ASSEMBLY V70-100 STD WINCH (cont'd)

ITEM	PART NUMBER	DESCRIPTION	QTY
--	0912015	SUBFRAME ASSY V70-100 STDWINCH	
1	0300649	UNION, STRAIGHT 12MJ - 12MJ	2
2	0301445	FITTING, EXTENDED	4
3	0301522	ADAPTER, 6MJ-6MB	3
4	0301620	FITTING, HYD. 6MJ - 6MB90	1
5	0301895	GREASE FITTING, 1/8 STR PTF	4
6	0301959	SNAP RING-INTERNAL 1-1/2	4
7	0302275	FITTING, CONN 8MJ-6MB W/STEP	5
8	0302276	FITTING, ELB 90 DEG	1
9	0302726	GREASE FITTING, 1/4-28 45	16
10	0306700	MANIF. BLOCK DAMAN-AJ2700206S	1
11	0307003	FITT, HYD UNION 10MJ-10MJ	2
12	0310432	FITTING - ADAPTER 16MJ-20MB	2
13	0311971	TUBE ASSY - 1/2	4
14	0311972	TUBE ASSY - 5/8"	2
15	0311973	TUBE ASSY - 3/4	2
16	0311987	TUBE ASSY - 5/8	4
17	0312210	SAFETY SNAP PIN - 1/4	2
18	0312318	FITTING 8MJ - 8MJ90 4	
19	0312319	FITTING 10MJ - 10MJ90	4
20	0312320	FITTING 12MJ - 12MJ90	2
21	0312663	HOSE - 16FJX45-16GMV-16MJ X 57	2
22	0400066	SCREW, 1/4-20X3/4 HHC GR5	8
23	0400070	SCREW, 1/4-20X1 HHC GR5	2
24	0400114	SCREW, 5/16-18X3 HHC GR5	4
25	0400126	SCREW, 3/8-16X1 HHC GR5	8
26	0400130	SCREW, 3/8-16X3-1/2 HHC GR5	4
27	0400306	SCREW, 7/8-9X3 HHC GR8	10
28	0400366	NUT, 1/4-20 HEX	2
29	0400391	NUT, 3/8-16 HEX PL	8
30	0400392	NUT, 3/8-16 LOK	4
31	0400431	NUT, 3/4-10 LOK GR8	12
32	0400437	NUT, 7/8-9 LOK GR8	10
33	0400452	LKWASHER, 1/4	20
34	0400480	WASHER, 3/8	16
35	0400482	LKWASHER, 3/8	8
36	0400490	WASHER, 3/4 GR8	12

ITEM	PART NUMBER	DESCRIPTION	QTY
37	0400491	LKWASHER, 1/2	8
38	0400492	USS FLAT WASHER, 1/2	8
39	0400508	LKWASHER, 5/8	2
40	0400513	WASHER, 7/8	10
41	0400776	NUT, 5/16-18 JAM LOK	4
42	0401021	SCREW, 3/4-10X2 HHC GR8	12
43	0719585	D-RING, TOWING	4
44	0723437	CHANNEL SUPPORT VULCAN	2
45	0724349	PLATE, JACK LEG COVER	2
46	0724499	PIN - UPPER JACK LEG CYL	2
47	0725807	PLATE, BEARING KEEPER	2
48	0810005	PIN - FORK RETAINING	2
49	0810342	SUBFRAME V70V100 3 WINCH	1
50	0911746	HYD TANK ASSY VULC XTRA WINCH	1
51	0912023	CONTROL STATION ASSY STD WINCH	1
52	9015738	HOLDING VALVE MHB-015-L	2
53	9018241	SINGLE TUBE CLAMP-1	2
54	9018254	5/8 TUBE CLAMP SM2160-PP	18
55	9018255	1/2 TUBE CLAMP FM2127-PP	12
56	9018256	3/4 TUBE CLAMP SM3190-PP	6
57	9041010	1/4 NC X 2 1/4 HHCS GR8	2
58	9041011	1/4 NC X 2 1/2 HHCS PL GR8	8
59	9041402	1/2 NC X 1 1/4 HHCS PLT GR8	8
60	9043950	5/8 NC X 1 1/2 HHCS PL GR 8	2
61	9053041	BEARING-SPHERICAL TORRIN	2
62	915770002	8AT2(8T90S-8T90S) HCL	2
63	930202500	PIVOT BLOCK WELD'T	2
64	930202504	TIE PLATE - BOOM PIVOT A	2
65	930202505	WASHER PLATE - BOOM PIVO	4
66	9402970	TOOLBOX MTG. PAD	4
67	945020001	WASHER PLATE-LOWER LIFT	2
68	945351500	PIN WELD'T LOWER LIFT CY	2
69	945720000	JACK LEG CYLINDER - 45/	2
70	946700000	45/50 BOOM LIFT CYLINDER	2
71	946770001	6AT2(6T90S-6T90S) HCL	2
72	GA0215	PIN-"D" RING	4

0912015, SUBFRAME ASSEMBLY V70-100 STD WINCH (cont'd)

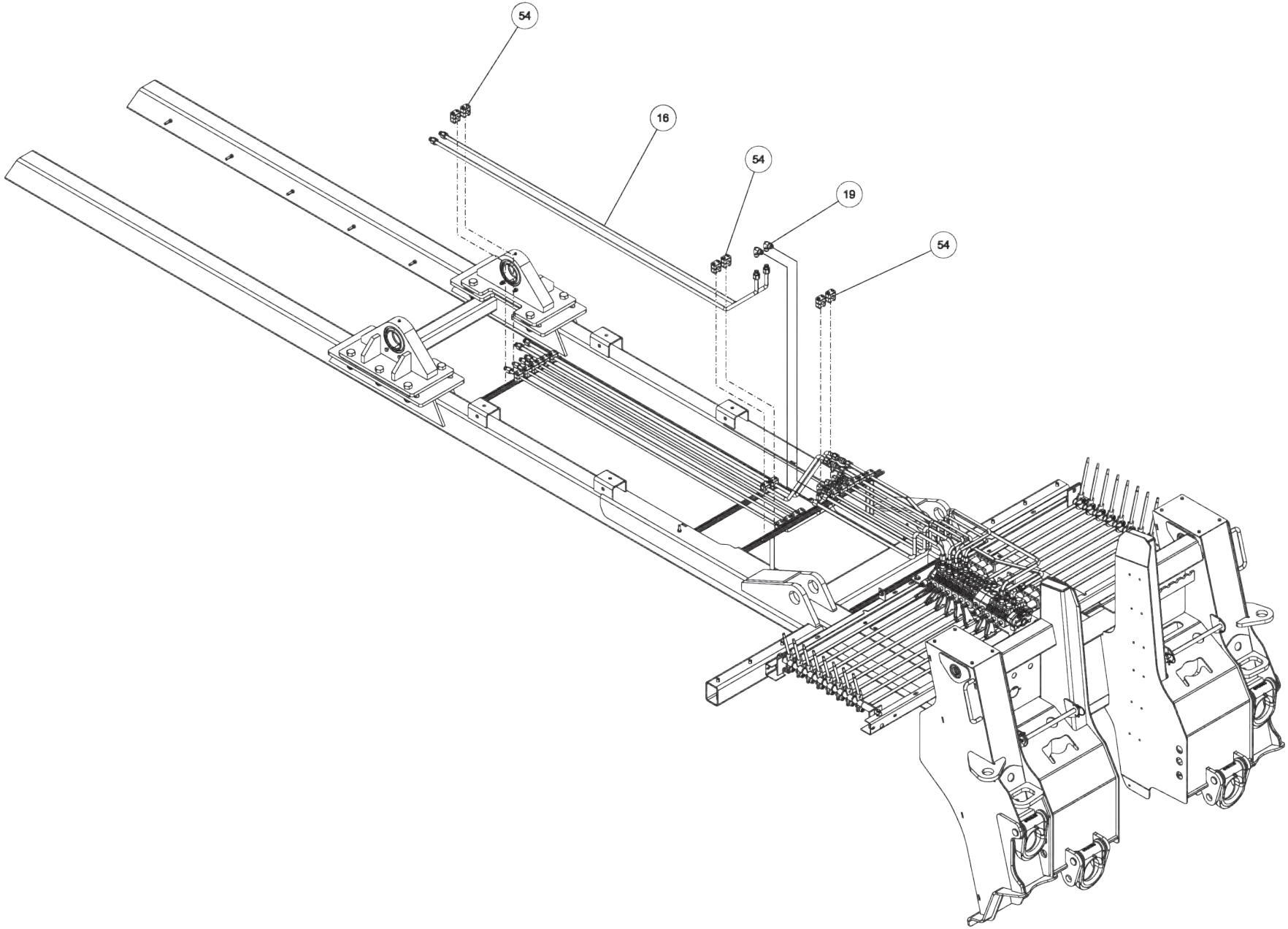

0912015, SUBFRAME ASSEMBLY V70-100 STD WINCH (cont'd)

ITEM	PART NUMBER	DESCRIPTION	QTY
--	0912015	SUBFRAME ASSY V70-100 STDWINCH	
1	0300649	UNION, STRAIGHT 12MJ - 12MJ	2
2	0301445	FITTING, EXTENDED	4
3	0301522	ADAPTER, 6MJ-6MB	3
4	0301620	FITTING, HYD. 6MJ - 6MB90	1
5	0301895	GREASE FITTING, 1/8 STR PTF	4
6	0301959	SNAP RING-INTERNAL 1-1/2	4
7	0302275	FITTING, CONN 8MJ-6MB W/STEP	5
8	0302276	FITTING, ELB 90 DEG	1
9	0302726	GREASE FITTING, 1/4-28 45	16
10	0306700	MANIF. BLOCK DAMAN-AJ2700206S	1
11	0307003	FITT, HYD UNION 10MJ-10MJ	2
12	0310432	FITTING - ADAPTER 16MJ-20MB	2
13	0311971	TUBE ASSY - 1/2	4
14	0311972	TUBE ASSY - 5/8"	2
15	0311973	TUBE ASSY - 3/4	2
16	0311987	TUBE ASSY - 5/8	4
17	0312210	SAFETY SNAP PIN - 1/4	2
18	0312318	FITTING 8MJ - 8MJ90 4	
19	0312319	FITTING 10MJ - 10MJ90	4
20	0312320	FITTING 12MJ - 12MJ90	2
21	0312663	HOSE - 16FJX45-16GMV-16MJ X 57	2
22	0400066	SCREW, 1/4-20X3/4 HHC GR5	8
23	0400070	SCREW, 1/4-20X1 HHC GR5	2
24	0400114	SCREW, 5/16-18X3 HHC GR5	4
25	0400126	SCREW, 3/8-16X1 HHC GR5	8
26	0400130	SCREW, 3/8-16X3-1/2 HHC GR5	4
27	0400306	SCREW, 7/8-9X3 HHC GR8	10
28	0400366	NUT, 1/4-20 HEX	2
29	0400391	NUT, 3/8-16 HEX PL	8
30	0400392	NUT, 3/8-16 LOK	4
31	0400431	NUT, 3/4-10 LOK GR8	12
32	0400437	NUT, 7/8-9 LOK GR8	10
33	0400452	LKWASHER, 1/4	20
34	0400480	WASHER, 3/8	16
35	0400482	LKWASHER, 3/8	8
36	0400490	WASHER, 3/4 GR8	12

ITEM	PART NUMBER	DESCRIPTION	QTY
37	0400491	LKWASHER, 1/2	8
38	0400492	USS FLAT WASHER, 1/2	8
39	0400508	LKWASHER, 5/8	2
40	0400513	WASHER, 7/8	10
41	0400776	NUT, 5/16-18 JAM LOK	4
42	0401021	SCREW, 3/4-10X2 HHC GR8	12
43	0719585	D-RING, TOWING	4
44	0723437	CHANNEL SUPPORT VULCAN	2
45	0724349	PLATE, JACK LEG COVER	2
46	0724499	PIN - UPPER JACK LEG CYL	2
47	0725807	PLATE, BEARING KEEPER	2
48	0810005	PIN - FORK RETAINING	2
49	0810342	SUBFRAME V70V100 3 WINCH	1
50	0911746	HYD TANK ASSY VULC XTRA WINCH	1
51	0912023	CONTROL STATION ASSY STD WINCH	1
52	9015738	HOLDING VALVE MHB-015-L	2
53	9018241	SINGLE TUBE CLAMP-1	2
54	9018254	5/8 TUBE CLAMP SM2160-PP	18
55	9018255	1/2 TUBE CLAMP FM2127-PP	12
56	9018256	3/4 TUBE CLAMP SM3190-PP	6
57	9041010	1/4 NC X 2 1/4 HHCS GR8	2
58	9041011	1/4 NC X 2 1/2 HHCS PL GR8	8
59	9041402	1/2 NC X 1 1/4 HHCS PLT GR8	8
60	9043950	5/8 NC X 1 1/2 HHCS PL GR 8	2
61	9053041	BEARING-SPHERICAL TORRIN	2
62	915770002	8AT2(8T90S-8T90S) HCL	2
63	930202500	PIVOT BLOCK WELD'T	2
64	930202504	TIE PLATE - BOOM PIVOT A	2
65	930202505	WASHER PLATE - BOOM PIVO	4
66	9402970	TOOLBOX MTG. PAD	4
67	945020001	WASHER PLATE-LOWER LIFT	2
68	945351500	PIN WELD'T LOWER LIFT CY	2
69	945720000	JACK LEG CYLINDER - 45/	2
70	946700000	45/50 BOOM LIFT CYLINDER	2
71	946770001	6AT2(6T90S-6T90S) HCL	2
72	GA0215	PIN-"D" RING	4

0912015, SUBFRAME ASSEMBLY V70-100 STD WINCH (cont'd)

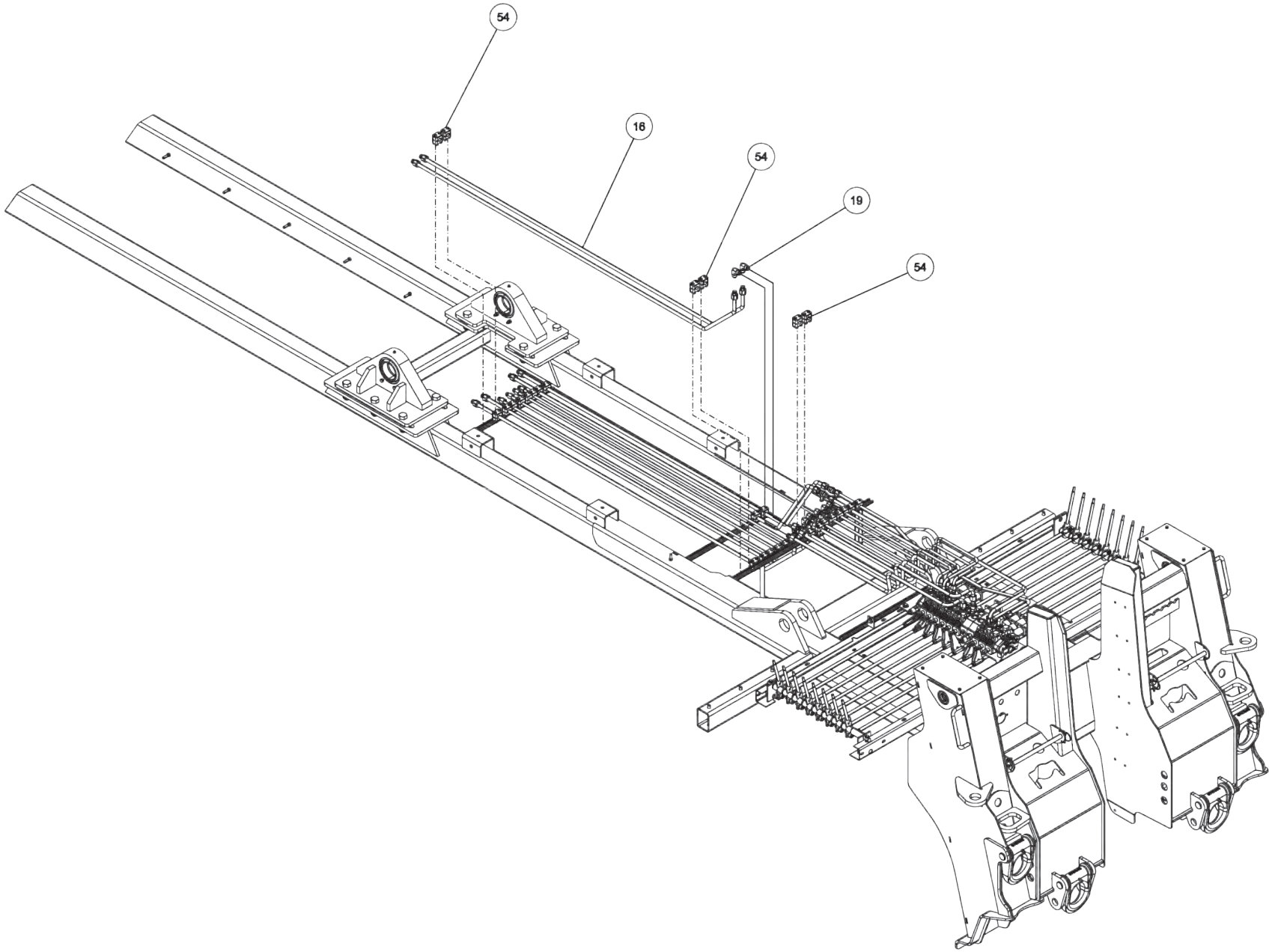

0912015, SUBFRAME ASSEMBLY V70-100 STD WINCH (cont'd)

ITEM	PART NUMBER	DESCRIPTION	QTY
--	0912015	SUBFRAME ASSY V70-100 STDWINCH	
1	0300649	UNION, STRAIGHT 12MJ - 12MJ	2
2	0301445	FITTING, EXTENDED	4
3	0301522	ADAPTER, 6MJ-6MB	3
4	0301620	FITTING, HYD. 6MJ - 6MB90	1
5	0301895	GREASE FITTING, 1/8 STR PTF	4
6	0301959	SNAP RING-INTERNAL 1-1/2	4
7	0302275	FITTING, CONN 8MJ-6MB W/STEP	5
8	0302276	FITTING, ELB 90 DEG	1
9	0302726	GREASE FITTING, 1/4-28 45	16
10	0306700	MANIF. BLOCK DAMAN-AJ2700206S	1
11	0307003	FITT, HYD UNION 10MJ-10MJ	2
12	0310432	FITTING - ADAPTER 16MJ-20MB	2
13	0311971	TUBE ASSY - 1/2	4
14	0311972	TUBE ASSY - 5/8"	2
15	0311973	TUBE ASSY - 3/4	2
16	0311987	TUBE ASSY - 5/8	4
17	0312210	SAFETY SNAP PIN - 1/4	2
18	0312318	FITTING 8MJ - 8MJ90 4	
19	0312319	FITTING 10MJ - 10MJ90	4
20	0312320	FITTING 12MJ - 12MJ90	2
21	0312663	HOSE - 16FJX45-16GMV-16MJ X 57	2
22	0400066	SCREW, 1/4-20X3/4 HHC GR5	8
23	0400070	SCREW, 1/4-20X1 HHC GR5	2
24	0400114	SCREW, 5/16-18X3 HHC GR5	4
25	0400126	SCREW, 3/8-16X1 HHC GR5	8
26	0400130	SCREW, 3/8-16X3-1/2 HHC GR5	4
27	0400306	SCREW, 7/8-9X3 HHC GR8	10
28	0400366	NUT, 1/4-20 HEX	2
29	0400391	NUT, 3/8-16 HEX PL	8
30	0400392	NUT, 3/8-16 LOK	4
31	0400431	NUT, 3/4-10 LOK GR8	12
32	0400437	NUT, 7/8-9 LOK GR8	10
33	0400452	LKWASHER, 1/4	20
34	0400480	WASHER, 3/8	16
35	0400482	LKWASHER, 3/8	8
36	0400490	WASHER, 3/4 GR8	12

ITEM	PART NUMBER	DESCRIPTION	QTY
37	0400491	LKWASHER, 1/2	8
38	0400492	USS FLAT WASHER, 1/2	8
39	0400508	LKWASHER, 5/8	2
40	0400513	WASHER, 7/8	10
41	0400776	NUT, 5/16-18 JAM LOK	4
42	0401021	SCREW, 3/4-10X2 HHC GR8	12
43	0719585	D-RING, TOWING	4
44	0723437	CHANNEL SUPPORT VULCAN	2
45	0724349	PLATE, JACK LEG COVER	2
46	0724499	PIN - UPPER JACK LEG CYL	2
47	0725807	PLATE, BEARING KEEPER	2
48	0810005	PIN - FORK RETAINING	2
49	0810342	SUBFRAME V70V100 3 WINCH	1
50	0911746	HYD TANK ASSY VULC XTRA WINCH	1
51	0912023	CONTROL STATION ASSY STD WINCH	1
52	9015738	HOLDING VALVE MHB-015-L	2
53	9018241	SINGLE TUBE CLAMP-1	2
54	9018254	5/8 TUBE CLAMP SM2160-PP	18
55	9018255	1/2 TUBE CLAMP FM2127-PP	12
56	9018256	3/4 TUBE CLAMP SM3190-PP	6
57	9041010	1/4 NC X 2 1/4 HHCS GR8	2
58	9041011	1/4 NC X 2 1/2 HHCS PL GR8	8
59	9041402	1/2 NC X 1 1/4 HHCS PLT GR8	8
60	9043950	5/8 NC X 1 1/2 HHCS PL GR 8	2
61	9053041	BEARING-SPHERICAL TORRIN	2
62	915770002	8AT2(8T90S-8T90S) HCL	2
63	930202500	PIVOT BLOCK WELD'T	2
64	930202504	TIE PLATE - BOOM PIVOT A	2
65	930202505	WASHER PLATE - BOOM PIVO	4
66	9402970	TOOLBOX MTG. PAD	4
67	945020001	WASHER PLATE-LOWER LIFT	2
68	945351500	PIN WELD'T LOWER LIFT CY	2
69	945720000	JACK LEG CYLINDER - 45/	2
70	946700000	45/50 BOOM LIFT CYLINDER	2
71	946770001	6AT2(6T90S-6T90S) HCL	2
72	GA0215	PIN-"D" RING	4

0912015, SUBFRAME ASSEMBLY V70-100 STD WINCH (cont'd)

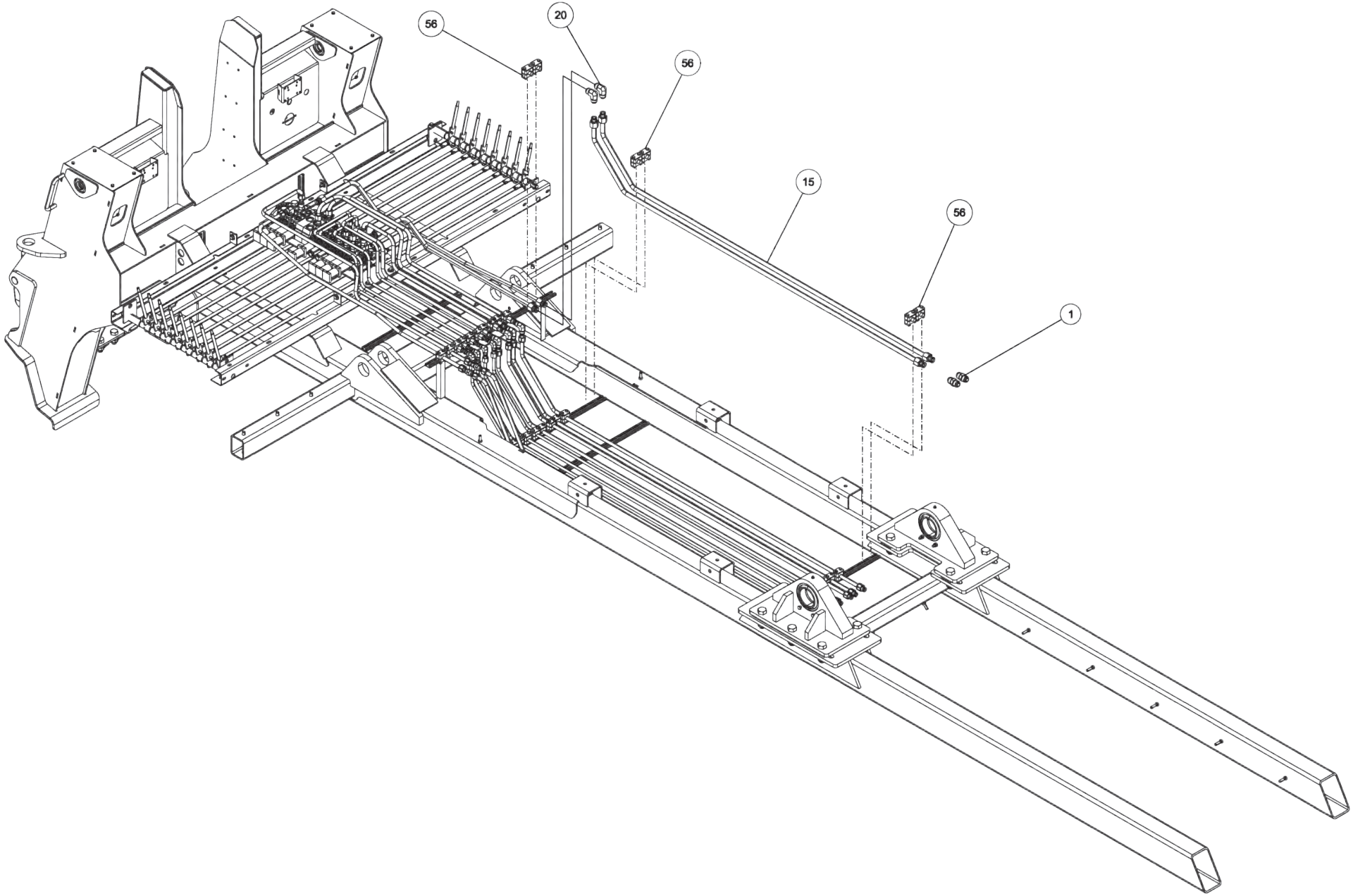

0912015, SUBFRAME ASSEMBLY V70-100 STD WINCH (cont'd)

ITEM	PART NUMBER	DESCRIPTION	QTY
--	0912015	SUBFRAME ASSY V70-100 STDWINCH	
1	0300649	UNION, STRAIGHT 12MJ - 12MJ	2
2	0301445	FITTING, EXTENDED	4
3	0301522	ADAPTER, 6MJ-6MB	3
4	0301620	FITTING, HYD. 6MJ - 6MB90	1
5	0301895	GREASE FITTING, 1/8 STR PTF	4
6	0301959	SNAP RING-INTERNAL 1-1/2	4
7	0302275	FITTING, CONN 8MJ-6MB W/STEP	5
8	0302276	FITTING, ELB 90 DEG	1
9	0302726	GREASE FITTING, 1/4-28 45	16
10	0306700	MANIF. BLOCK DAMAN-AJ2700206S	1
11	0307003	FITT, HYD UNION 10MJ-10MJ	2
12	0310432	FITTING - ADAPTER 16MJ-20MB	2
13	0311971	TUBE ASSY - 1/2	4
14	0311972	TUBE ASSY - 5/8"	2
15	0311973	TUBE ASSY - 3/4	2
16	0311987	TUBE ASSY - 5/8	4
17	0312210	SAFETY SNAP PIN - 1/4	2
18	0312318	FITTING 8MJ - 8MJ90 4	
19	0312319	FITTING 10MJ - 10MJ90	4
20	0312320	FITTING 12MJ - 12MJ90	2
21	0312663	HOSE - 16FJX45-16GMV-16MJ X 57	2
22	0400066	SCREW, 1/4-20X3/4 HHC GR5	8
23	0400070	SCREW, 1/4-20X1 HHC GR5	2
24	0400114	SCREW, 5/16-18X3 HHC GR5	4
25	0400126	SCREW, 3/8-16X1 HHC GR5	8
26	0400130	SCREW, 3/8-16X3-1/2 HHC GR5	4
27	0400306	SCREW, 7/8-9X3 HHC GR8	10
28	0400366	NUT, 1/4-20 HEX	2
29	0400391	NUT, 3/8-16 HEX PL	8
30	0400392	NUT, 3/8-16 LOK	4
31	0400431	NUT, 3/4-10 LOK GR8	12
32	0400437	NUT, 7/8-9 LOK GR8	10
33	0400452	LKWASHER, 1/4	20
34	0400480	WASHER, 3/8	16
35	0400482	LKWASHER, 3/8	8
36	0400490	WASHER, 3/4 GR8	12

ITEM	PART NUMBER	DESCRIPTION	QTY
37	0400491	LKWASHER, 1/2	8
38	0400492	USS FLAT WASHER, 1/2	8
39	0400508	LKWASHER, 5/8	2
40	0400513	WASHER, 7/8	10
41	0400776	NUT, 5/16-18 JAM LOK	4
42	0401021	SCREW, 3/4-10X2 HHC GR8	12
43	0719585	D-RING, TOWING	4
44	0723437	CHANNEL SUPPORT VULCAN	2
45	0724349	PLATE, JACK LEG COVER	2
46	0724499	PIN - UPPER JACK LEG CYL	2
47	0725807	PLATE, BEARING KEEPER	2
48	0810005	PIN - FORK RETAINING	2
49	0810342	SUBFRAME V70V100 3 WINCH	1
50	0911746	HYD TANK ASSY VULC XTRA WINCH	1
51	0912023	CONTROL STATION ASSY STD WINCH	1
52	9015738	HOLDING VALVE MHB-015-L	2
53	9018241	SINGLE TUBE CLAMP-1	2
54	9018254	5/8 TUBE CLAMP SM2160-PP	18
55	9018255	1/2 TUBE CLAMP FM2127-PP	12
56	9018256	3/4 TUBE CLAMP SM3190-PP	6
57	9041010	1/4 NC X 2 1/4 HHCS GR8	2
58	9041011	1/4 NC X 2 1/2 HHCS PL GR8	8
59	9041402	1/2 NC X 1 1/4 HHCS PLT GR8	8
60	9043950	5/8 NC X 1 1/2 HHCS PL GR 8	2
61	9053041	BEARING-SPHERICAL TORRIN	2
62	915770002	8AT2(8T90S-8T90S) HCL	2
63	930202500	PIVOT BLOCK WELD'T	2
64	930202504	TIE PLATE - BOOM PIVOT A	2
65	930202505	WASHER PLATE - BOOM PIVO	4
66	9402970	TOOLBOX MTG. PAD	4
67	945020001	WASHER PLATE-LOWER LIFT	2
68	945351500	PIN WELD'T LOWER LIFT CY	2
69	945720000	JACK LEG CYLINDER - 45/	2
70	946700000	45/50 BOOM LIFT CYLINDER	2
71	946770001	6AT2(6T90S-6T90S) HCL	2
72	GA0215	PIN-"D" RING	4

0912015, SUBFRAME ASSEMBLY V70-100 STD WINCH (cont'd)

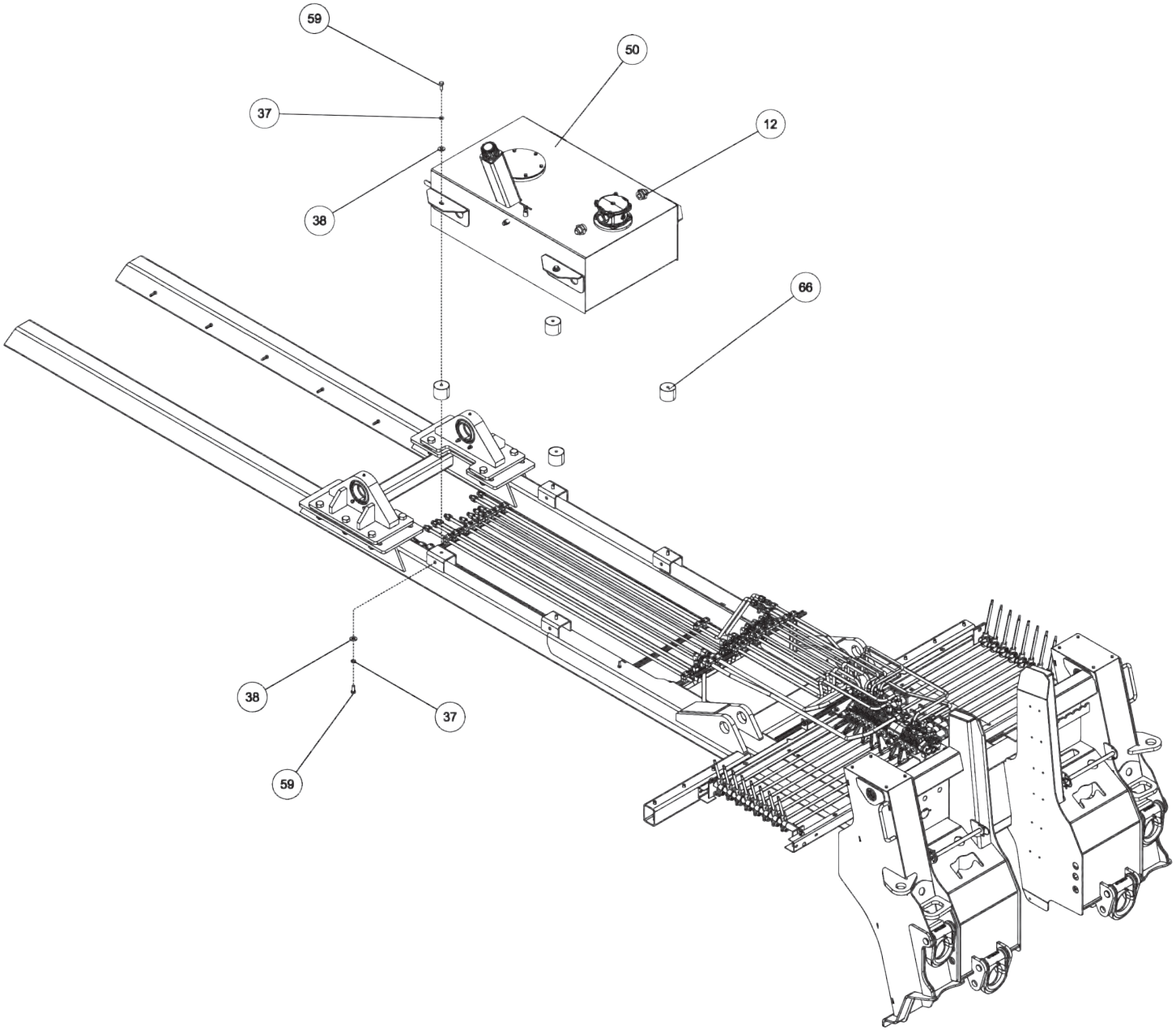

0912015, SUBFRAME ASSEMBLY V70-100 STD WINCH (cont'd)

ITEM	PART NUMBER	DESCRIPTION	QTY
--	0912015	SUBFRAME ASSY V70-100 STDWINCH	
1	0300649	UNION, STRAIGHT 12MJ - 12MJ	2
2	0301445	FITTING, EXTENDED	4
3	0301522	ADAPTER, 6MJ-6MB	3
4	0301620	FITTING, HYD. 6MJ - 6MB90	1
5	0301895	GREASE FITTING, 1/8 STR PTF	4
6	0301959	SNAP RING-INTERNAL 1-1/2	4
7	0302275	FITTING, CONN 8MJ-6MB W/STEP	5
8	0302276	FITTING, ELB 90 DEG	1
9	0302726	GREASE FITTING, 1/4-28 45	16
10	0306700	MANIF. BLOCK DAMAN-AJ2700206S	1
11	0307003	FITT, HYD UNION 10MJ-10MJ	2
12	0310432	FITTING - ADAPTER 16MJ-20MB	2
13	0311971	TUBE ASSY - 1/2	4
14	0311972	TUBE ASSY - 5/8"	2
15	0311973	TUBE ASSY - 3/4	2
16	0311987	TUBE ASSY - 5/8	4
17	0312210	SAFETY SNAP PIN - 1/4	2
18	0312318	FITTING 8MJ - 8MJ90 4	
19	0312319	FITTING 10MJ - 10MJ90	4
20	0312320	FITTING 12MJ - 12MJ90	2
21	0312663	HOSE - 16FJX45-16GMV-16MJ X 57	2
22	0400066	SCREW, 1/4-20X3/4 HHC GR5	8
23	0400070	SCREW, 1/4-20X1 HHC GR5	2
24	0400114	SCREW, 5/16-18X3 HHC GR5	4
25	0400126	SCREW, 3/8-16X1 HHC GR5	8
26	0400130	SCREW, 3/8-16X3-1/2 HHC GR5	4
27	0400306	SCREW, 7/8-9X3 HHC GR8	10
28	0400366	NUT, 1/4-20 HEX	2
29	0400391	NUT, 3/8-16 HEX PL	8
30	0400392	NUT, 3/8-16 LOK	4
31	0400431	NUT, 3/4-10 LOK GR8	12
32	0400437	NUT, 7/8-9 LOK GR8	10
33	0400452	LKWASHER, 1/4	20
34	0400480	WASHER, 3/8	16
35	0400482	LKWASHER, 3/8	8
36	0400490	WASHER, 3/4 GR8	12

ITEM	PART NUMBER	DESCRIPTION	QTY
37	0400491	LKWASHER, 1/2	8
38	0400492	USS FLAT WASHER, 1/2	8
39	0400508	LKWASHER, 5/8	2
40	0400513	WASHER, 7/8	10
41	0400776	NUT, 5/16-18 JAM LOK	4
42	0401021	SCREW, 3/4-10X2 HHC GR8	12
43	0719585	D-RING, TOWING	4
44	0723437	CHANNEL SUPPORT VULCAN	2
45	0724349	PLATE, JACK LEG COVER	2
46	0724499	PIN - UPPER JACK LEG CYL	2
47	0725807	PLATE, BEARING KEEPER	2
48	0810005	PIN - FORK RETAINING	2
49	0810342	SUBFRAME V70V100 3 WINCH	1
50	0911746	HYD TANK ASSY VULC XTRA WINCH	1
51	0912023	CONTROL STATION ASSY STD WINCH	1
52	9015738	HOLDING VALVE MHB-015-L	2
53	9018241	SINGLE TUBE CLAMP-1	2
54	9018254	5/8 TUBE CLAMP SM2160-PP	18
55	9018255	1/2 TUBE CLAMP FM2127-PP	12
56	9018256	3/4 TUBE CLAMP SM3190-PP	6
57	9041010	1/4 NC X 2 1/4 HHCS GR8	2
58	9041011	1/4 NC X 2 1/2 HHCS PL GR8	8
59	9041402	1/2 NC X 1 1/4 HHCS PLT GR8	8
60	9043950	5/8 NC X 1 1/2 HHCS PL GR 8	2
61	9053041	BEARING-SPHERICAL TORRIN	2
62	915770002	8AT2(8T90S-8T90S) HCL	2
63	930202500	PIVOT BLOCK WELD'T	2
64	930202504	TIE PLATE - BOOM PIVOT A	2
65	930202505	WASHER PLATE - BOOM PIVO	4
66	9402970	TOOLBOX MTG. PAD	4
67	945020001	WASHER PLATE-LOWER LIFT	2
68	945351500	PIN WELD'T LOWER LIFT CY	2
69	945720000	JACK LEG CYLINDER - 45/	2
70	946700000	45/50 BOOM LIFT CYLINDER	2
71	946770001	6AT2(6T90S-6T90S) HCL	2
72	GA0215	PIN-"D" RING	4

0912015, SUBFRAME ASSEMBLY V70-100 STD WINCH (cont'd)

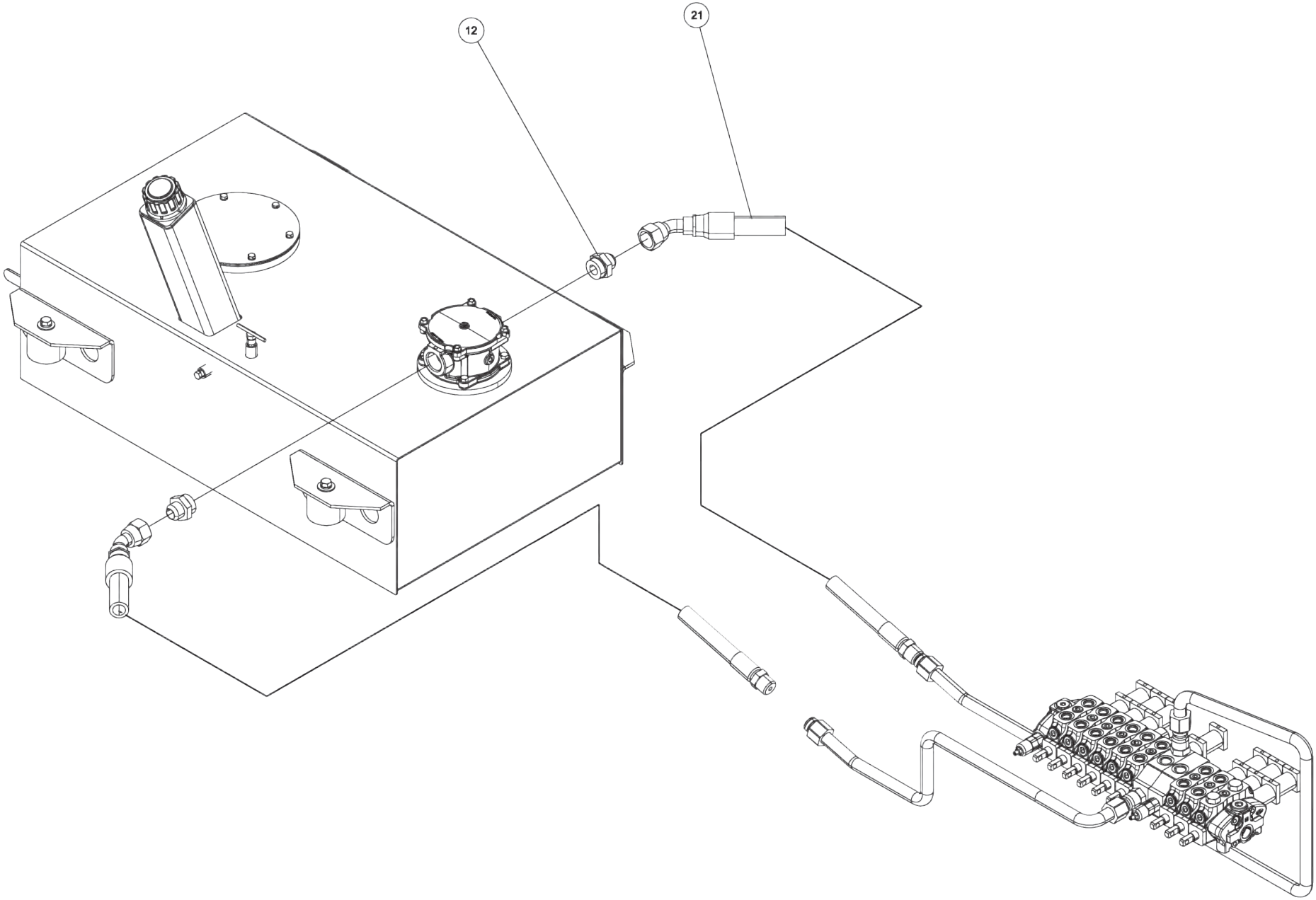

0912015, SUBFRAME ASSEMBLY V70-100 STD WINCH (cont'd)

ITEM	PART NUMBER	DESCRIPTION	QTY
--	0912015	SUBFRAME ASSY V70-100 STDWINCH	
1	0300649	UNION, STRAIGHT 12MJ - 12MJ	2
2	0301445	FITTING, EXTENDED	4
3	0301522	ADAPTER, 6MJ-6MB	3
4	0301620	FITTING, HYD. 6MJ - 6MB90	1
5	0301895	GREASE FITTING, 1/8 STR PTF	4
6	0301959	SNAP RING-INTERNAL 1-1/2	4
7	0302275	FITTING, CONN 8MJ-6MB W/STEP	5
8	0302276	FITTING, ELB 90 DEG	1
9	0302726	GREASE FITTING, 1/4-28 45	16
10	0306700	MANIF. BLOCK DAMAN-AJ2700206S	1
11	0307003	FITT, HYD UNION 10MJ-10MJ	2
12	0310432	FITTING - ADAPTER 16MJ-20MB	2
13	0311971	TUBE ASSY - 1/2	4
14	0311972	TUBE ASSY - 5/8"	2
15	0311973	TUBE ASSY - 3/4	2
16	0311987	TUBE ASSY - 5/8	4
17	0312210	SAFETY SNAP PIN - 1/4	2
18	0312318	FITTING 8MJ - 8MJ90 4	
19	0312319	FITTING 10MJ - 10MJ90	4
20	0312320	FITTING 12MJ - 12MJ90	2
21	0312663	HOSE - 16FJX45-16GMV-16MJ X 57	2
22	0400066	SCREW, 1/4-20X3/4 HHC GR5	8
23	0400070	SCREW, 1/4-20X1 HHC GR5	2
24	0400114	SCREW, 5/16-18X3 HHC GR5	4
25	0400126	SCREW, 3/8-16X1 HHC GR5	8
26	0400130	SCREW, 3/8-16X3-1/2 HHC GR5	4
27	0400306	SCREW, 7/8-9X3 HHC GR8	10
28	0400366	NUT, 1/4-20 HEX	2
29	0400391	NUT, 3/8-16 HEX PL	8
30	0400392	NUT, 3/8-16 LOK	4
31	0400431	NUT, 3/4-10 LOK GR8	12
32	0400437	NUT, 7/8-9 LOK GR8	10
33	0400452	LKWASHER, 1/4	20
34	0400480	WASHER, 3/8	16
35	0400482	LKWASHER, 3/8	8
36	0400490	WASHER, 3/4 GR8	12

ITEM	PART NUMBER	DESCRIPTION	QTY
37	0400491	LKWASHER, 1/2	8
38	0400492	USS FLAT WASHER, 1/2	8
39	0400508	LKWASHER, 5/8	2
40	0400513	WASHER, 7/8	10
41	0400776	NUT, 5/16-18 JAM LOK	4
42	0401021	SCREW, 3/4-10X2 HHC GR8	12
43	0719585	D-RING, TOWING	4
44	0723437	CHANNEL SUPPORT VULCAN	2
45	0724349	PLATE, JACK LEG COVER	2
46	0724499	PIN - UPPER JACK LEG CYL	2
47	0725807	PLATE, BEARING KEEPER	2
48	0810005	PIN - FORK RETAINING	2
49	0810342	SUBFRAME V70V100 3 WINCH	1
50	0911746	HYD TANK ASSY VULC XTRA WINCH	1
51	0912023	CONTROL STATION ASSY STD WINCH	1
52	9015738	HOLDING VALVE MHB-015-L	2
53	9018241	SINGLE TUBE CLAMP-1	2
54	9018254	5/8 TUBE CLAMP SM2160-PP	18
55	9018255	1/2 TUBE CLAMP FM2127-PP	12
56	9018256	3/4 TUBE CLAMP SM3190-PP	6
57	9041010	1/4 NC X 2 1/4 HHCS GR8	2
58	9041011	1/4 NC X 2 1/2 HHCS PL GR8	8
59	9041402	1/2 NC X 1 1/4 HHCS PLT GR8	8
60	9043950	5/8 NC X 1 1/2 HHCS PL GR 8	2
61	9053041	BEARING-SPHERICAL TORRIN	2
62	915770002	8AT2(8T90S-8T90S) HCL	2
63	930202500	PIVOT BLOCK WELD'T	2
64	930202504	TIE PLATE - BOOM PIVOT A	2
65	930202505	WASHER PLATE - BOOM PIVO	4
66	9402970	TOOLBOX MTG. PAD	4
67	945020001	WASHER PLATE-LOWER LIFT	2
68	945351500	PIN WELD'T LOWER LIFT CY	2
69	945720000	JACK LEG CYLINDER - 45/	2
70	946700000	45/50 BOOM LIFT CYLINDER	2
71	946770001	6AT2(6T90S-6T90S) HCL	2
72	GA0215	PIN-"D" RING	4

0912015, SUBFRAME ASSEMBLY V70-100 STD WINCH (cont'd)

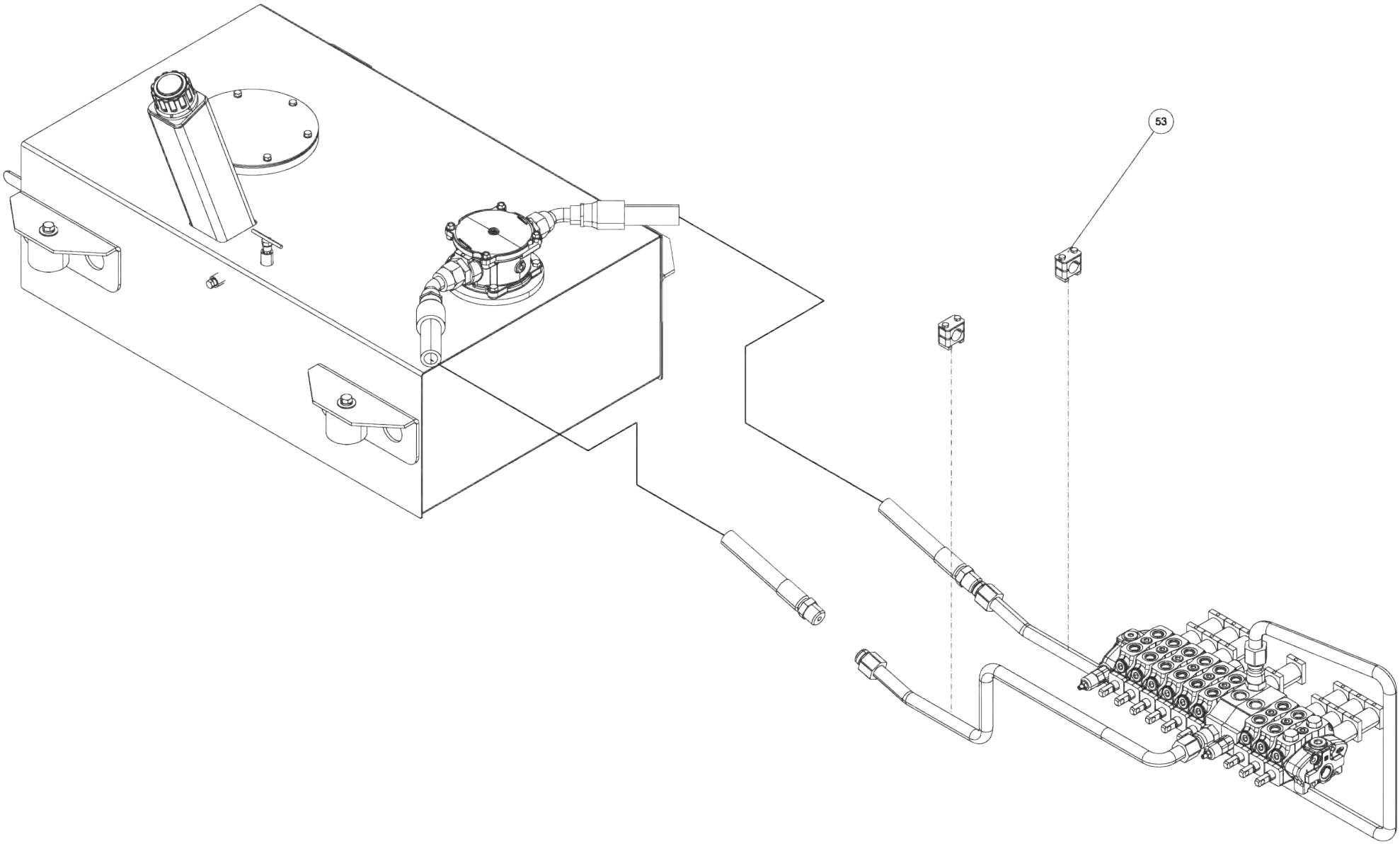

0912015, SUBFRAME ASSEMBLY V70-100 STD WINCH (cont'd)

ITEM	PART NUMBER	DESCRIPTION	QTY
--	0912015	SUBFRAME ASSY V70-100 STDWINCH	
1	0300649	UNION, STRAIGHT 12MJ - 12MJ	2
2	0301445	FITTING, EXTENDED	4
3	0301522	ADAPTER, 6MJ-6MB	3
4	0301620	FITTING, HYD. 6MJ - 6MB90	1
5	0301895	GREASE FITTING, 1/8 STR PTF	4
6	0301959	SNAP RING-INTERNAL 1-1/2	4
7	0302275	FITTING, CONN 8MJ-6MB W/STEP	5
8	0302276	FITTING, ELB 90 DEG	1
9	0302726	GREASE FITTING, 1/4-28 45	16
10	0306700	MANIF. BLOCK DAMAN-AJ2700206S	1
11	0307003	FITT, HYD UNION 10MJ-10MJ	2
12	0310432	FITTING - ADAPTER 16MJ-20MB	2
13	0311971	TUBE ASSY - 1/2	4
14	0311972	TUBE ASSY - 5/8"	2
15	0311973	TUBE ASSY - 3/4	2
16	0311987	TUBE ASSY - 5/8	4
17	0312210	SAFETY SNAP PIN - 1/4	2
18	0312318	FITTING 8MJ - 8MJ90 4	
19	0312319	FITTING 10MJ - 10MJ90	4
20	0312320	FITTING 12MJ - 12MJ90	2
21	0312663	HOSE - 16FJX45-16GMV-16MJ X 57	2
22	0400066	SCREW, 1/4-20X3/4 HHC GR5	8
23	0400070	SCREW, 1/4-20X1 HHC GR5	2
24	0400114	SCREW, 5/16-18X3 HHC GR5	4
25	0400126	SCREW, 3/8-16X1 HHC GR5	8
26	0400130	SCREW, 3/8-16X3-1/2 HHC GR5	4
27	0400306	SCREW, 7/8-9X3 HHC GR8	10
28	0400366	NUT, 1/4-20 HEX	2
29	0400391	NUT, 3/8-16 HEX PL	8
30	0400392	NUT, 3/8-16 LOK	4
31	0400431	NUT, 3/4-10 LOK GR8	12
32	0400437	NUT, 7/8-9 LOK GR8	10
33	0400452	LKWASHER, 1/4	20
34	0400480	WASHER, 3/8	16
35	0400482	LKWASHER, 3/8	8
36	0400490	WASHER, 3/4 GR8	12

ITEM	PART NUMBER	DESCRIPTION	QTY
37	0400491	LKWASHER, 1/2	8
38	0400492	USS FLAT WASHER, 1/2	8
39	0400508	LKWASHER, 5/8	2
40	0400513	WASHER, 7/8	10
41	0400776	NUT, 5/16-18 JAM LOK	4
42	0401021	SCREW, 3/4-10X2 HHC GR8	12
43	0719585	D-RING, TOWING	4
44	0723437	CHANNEL SUPPORT VULCAN	2
45	0724349	PLATE, JACK LEG COVER	2
46	0724499	PIN - UPPER JACK LEG CYL	2
47	0725807	PLATE, BEARING KEEPER	2
48	0810005	PIN - FORK RETAINING	2
49	0810342	SUBFRAME V70V100 3 WINCH	1
50	0911746	HYD TANK ASSY VULC XTRA WINCH	1
51	0912023	CONTROL STATION ASSY STD WINCH	1
52	9015738	HOLDING VALVE MHB-015-L	2
53	9018241	SINGLE TUBE CLAMP-1	2
54	9018254	5/8 TUBE CLAMP SM2160-PP	18
55	9018255	1/2 TUBE CLAMP FM2127-PP	12
56	9018256	3/4 TUBE CLAMP SM3190-PP	6
57	9041010	1/4 NC X 2 1/4 HHCS GR8	2
58	9041011	1/4 NC X 2 1/2 HHCS PL GR8	8
59	9041402	1/2 NC X 1 1/4 HHCS PLT GR8	8
60	9043950	5/8 NC X 1 1/2 HHCS PL GR 8	2
61	9053041	BEARING-SPHERICAL TORRIN	2
62	915770002	8AT2(8T90S-8T90S) HCL	2
63	930202500	PIVOT BLOCK WELD'T	2
64	930202504	TIE PLATE - BOOM PIVOT A	2
65	930202505	WASHER PLATE - BOOM PIVO	4
66	9402970	TOOLBOX MTG. PAD	4
67	945020001	WASHER PLATE-LOWER LIFT	2
68	945351500	PIN WELD'T LOWER LIFT CY	2
69	945720000	JACK LEG CYLINDER - 45/	2
70	946700000	45/50 BOOM LIFT CYLINDER	2
71	946770001	6AT2(6T90S-6T90S) HCL	2
72	GA0215	PIN-"D" RING	4

0912015, SUBFRAME ASSEMBLY V70-100 STD WINCH (cont'd)

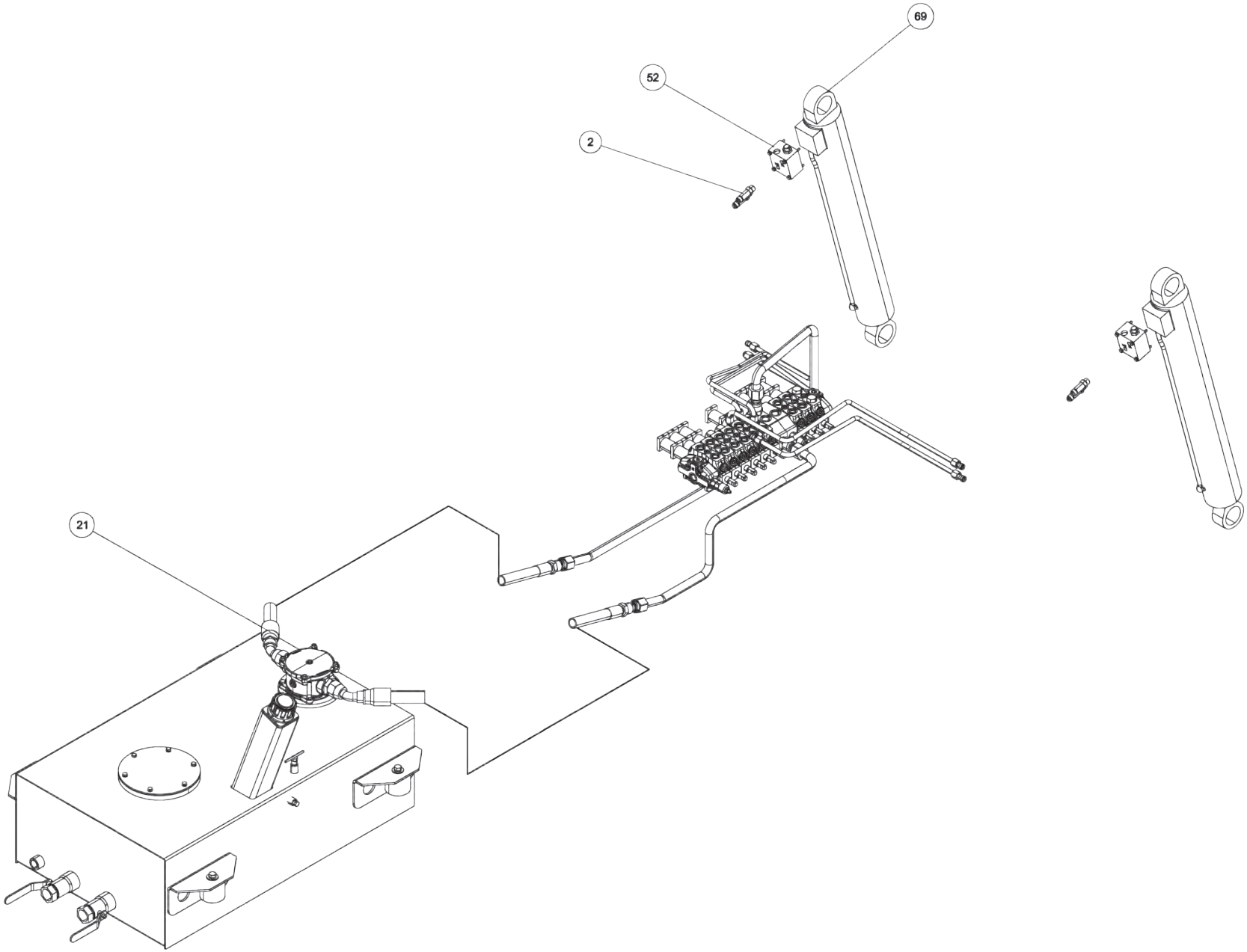

0912015, SUBFRAME ASSEMBLY V70-100 STD WINCH (cont'd)

ITEM	PART NUMBER	DESCRIPTION	QTY
--	0912015	SUBFRAME ASSY V70-100 STDWINCH	
1	0300649	UNION, STRAIGHT 12MJ - 12MJ	2
2	0301445	FITTING, EXTENDED	4
3	0301522	ADAPTER, 6MJ-6MB	3
4	0301620	FITTING, HYD. 6MJ - 6MB90	1
5	0301895	GREASE FITTING, 1/8 STR PTF	4
6	0301959	SNAP RING-INTERNAL 1-1/2	4
7	0302275	FITTING, CONN 8MJ-6MB W/STEP	5
8	0302276	FITTING, ELB 90 DEG	1
9	0302726	GREASE FITTING, 1/4-28 45	16
10	0306700	MANIF. BLOCK DAMAN-AJ2700206S	1
11	0307003	FITT, HYD UNION 10MJ-10MJ	2
12	0310432	FITTING - ADAPTER 16MJ-20MB	2
13	0311971	TUBE ASSY - 1/2	4
14	0311972	TUBE ASSY - 5/8"	2
15	0311973	TUBE ASSY - 3/4	2
16	0311987	TUBE ASSY - 5/8	4
17	0312210	SAFETY SNAP PIN - 1/4	2
18	0312318	FITTING 8MJ - 8MJ90 4	
19	0312319	FITTING 10MJ - 10MJ90	4
20	0312320	FITTING 12MJ - 12MJ90	2
21	0312663	HOSE - 16FJX45-16GMV-16MJ X 57	2
22	0400066	SCREW, 1/4-20X3/4 HHC GR5	8
23	0400070	SCREW, 1/4-20X1 HHC GR5	2
24	0400114	SCREW, 5/16-18X3 HHC GR5	4
25	0400126	SCREW, 3/8-16X1 HHC GR5	8
26	0400130	SCREW, 3/8-16X3-1/2 HHC GR5	4
27	0400306	SCREW, 7/8-9X3 HHC GR8	10
28	0400366	NUT, 1/4-20 HEX	2
29	0400391	NUT, 3/8-16 HEX PL	8
30	0400392	NUT, 3/8-16 LOK	4
31	0400431	NUT, 3/4-10 LOK GR8	12
32	0400437	NUT, 7/8-9 LOK GR8	10
33	0400452	LKWASHER, 1/4	20
34	0400480	WASHER, 3/8	16
35	0400482	LKWASHER, 3/8	8
36	0400490	WASHER, 3/4 GR8	12

ITEM	PART NUMBER	DESCRIPTION	QTY
37	0400491	LKWASHER, 1/2	8
38	0400492	USS FLAT WASHER, 1/2	8
39	0400508	LKWASHER, 5/8	2
40	0400513	WASHER, 7/8	10
41	0400776	NUT, 5/16-18 JAM LOK	4
42	0401021	SCREW, 3/4-10X2 HHC GR8	12
43	0719585	D-RING, TOWING	4
44	0723437	CHANNEL SUPPORT VULCAN	2
45	0724349	PLATE, JACK LEG COVER	2
46	0724499	PIN - UPPER JACK LEG CYL	2
47	0725807	PLATE, BEARING KEEPER	2
48	0810005	PIN - FORK RETAINING	2
49	0810342	SUBFRAME V70V100 3 WINCH	1
50	0911746	HYD TANK ASSY VULC XTRA WINCH	1
51	0912023	CONTROL STATION ASSY STD WINCH	1
52	9015738	HOLDING VALVE MHB-015-L	2
53	9018241	SINGLE TUBE CLAMP-1	2
54	9018254	5/8 TUBE CLAMP SM2160-PP	18
55	9018255	1/2 TUBE CLAMP FM2127-PP	12
56	9018256	3/4 TUBE CLAMP SM3190-PP	6
57	9041010	1/4 NC X 2 1/4 HHCS GR8	2
58	9041011	1/4 NC X 2 1/2 HHCS PL GR8	8
59	9041402	1/2 NC X 1 1/4 HHCS PLT GR8	8
60	9043950	5/8 NC X 1 1/2 HHCS PL GR 8	2
61	9053041	BEARING-SPHERICAL TORRIN	2
62	915770002	8AT2(8T90S-8T90S) HCL	2
63	930202500	PIVOT BLOCK WELD'T	2
64	930202504	TIE PLATE - BOOM PIVOT A	2
65	930202505	WASHER PLATE - BOOM PIVO	4
66	9402970	TOOLBOX MTG. PAD	4
67	945020001	WASHER PLATE-LOWER LIFT	2
68	945351500	PIN WELD'T LOWER LIFT CY	2
69	945720000	JACK LEG CYLINDER - 45/	2
70	946700000	45/50 BOOM LIFT CYLINDER	2
71	946770001	6AT2(6T90S-6T90S) HCL	2
72	GA0215	PIN-"D" RING	4

0912015, SUBFRAME ASSEMBLY V70-100 STD WINCH (cont'd)

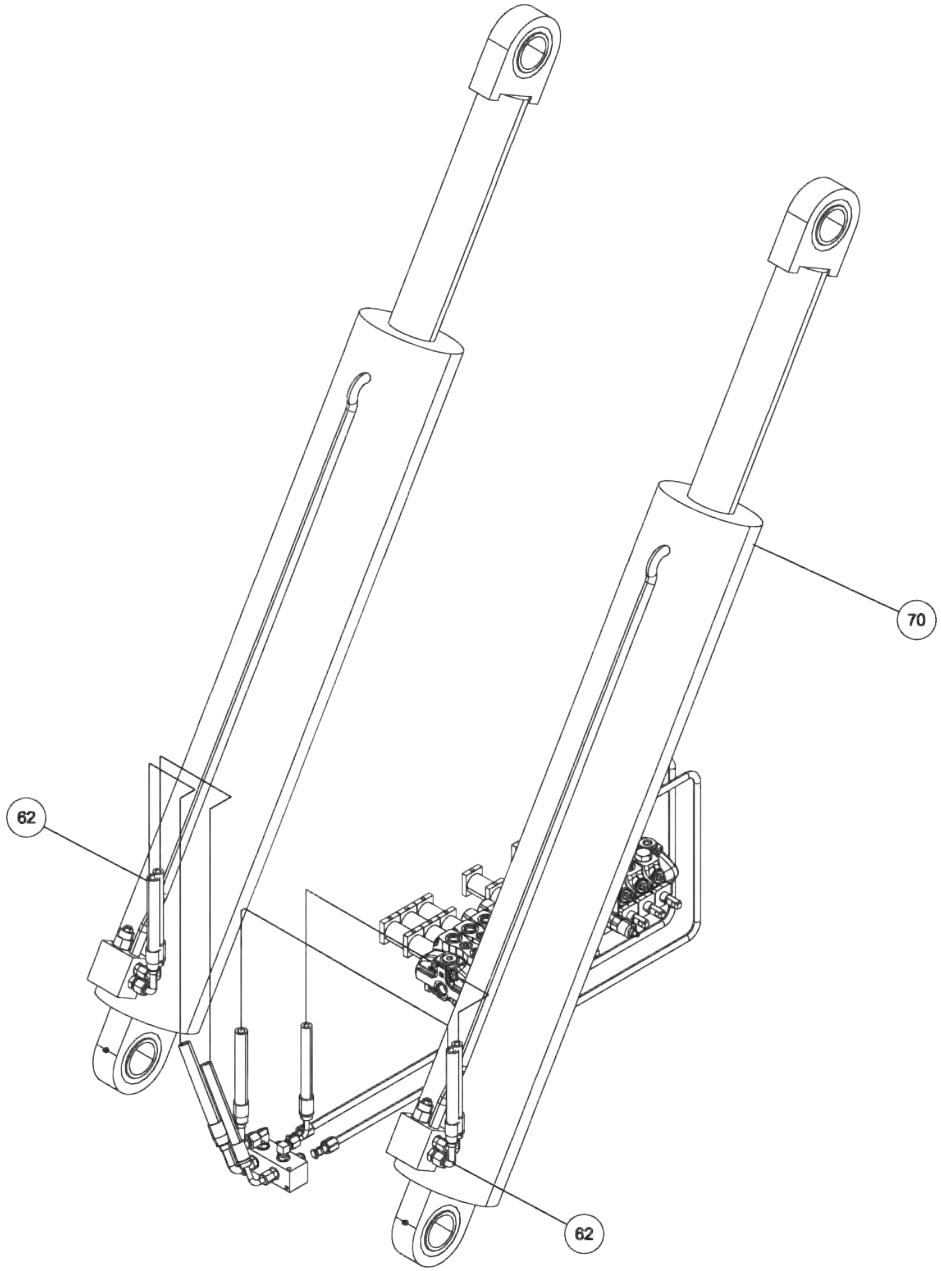

0912015, SUBFRAME ASSEMBLY V70-100 STD WINCH (cont'd)

ITEM	PART NUMBER	DESCRIPTION	QTY
--	0912015	SUBFRAME ASSY V70-100 STDWINCH	
1	0300649	UNION, STRAIGHT 12MJ - 12MJ	2
2	0301445	FITTING, EXTENDED	4
3	0301522	ADAPTER, 6MJ-6MB	3
4	0301620	FITTING, HYD. 6MJ - 6MB90	1
5	0301895	GREASE FITTING, 1/8 STR PTF	4
6	0301959	SNAP RING-INTERNAL 1-1/2	4
7	0302275	FITTING, CONN 8MJ-6MB W/STEP	5
8	0302276	FITTING, ELB 90 DEG	1
9	0302726	GREASE FITTING, 1/4-28 45	16
10	0306700	MANIF. BLOCK DAMAN-AJ2700206S	1
11	0307003	FITT, HYD UNION 10MJ-10MJ	2
12	0310432	FITTING - ADAPTER 16MJ-20MB	2
13	0311971	TUBE ASSY - 1/2	4
14	0311972	TUBE ASSY - 5/8"	2
15	0311973	TUBE ASSY - 3/4	2
16	0311987	TUBE ASSY - 5/8	4
17	0312210	SAFETY SNAP PIN - 1/4	2
18	0312318	FITTING 8MJ - 8MJ90 4	
19	0312319	FITTING 10MJ - 10MJ90	4
20	0312320	FITTING 12MJ - 12MJ90	2
21	0312663	HOSE - 16FJX45-16GMV-16MJ X 57	2
22	0400066	SCREW, 1/4-20X3/4 HHC GR5	8
23	0400070	SCREW, 1/4-20X1 HHC GR5	2
24	0400114	SCREW, 5/16-18X3 HHC GR5	4
25	0400126	SCREW, 3/8-16X1 HHC GR5	8
26	0400130	SCREW, 3/8-16X3-1/2 HHC GR5	4
27	0400306	SCREW, 7/8-9X3 HHC GR8	10
28	0400366	NUT, 1/4-20 HEX	2
29	0400391	NUT, 3/8-16 HEX PL	8
30	0400392	NUT, 3/8-16 LOK	4
31	0400431	NUT, 3/4-10 LOK GR8	12
32	0400437	NUT, 7/8-9 LOK GR8	10
33	0400452	LKWASHER, 1/4	20
34	0400480	WASHER, 3/8	16
35	0400482	LKWASHER, 3/8	8
36	0400490	WASHER, 3/4 GR8	12

ITEM	PART NUMBER	DESCRIPTION	QTY
37	0400491	LKWASHER, 1/2	8
38	0400492	USS FLAT WASHER, 1/2	8
39	0400508	LKWASHER, 5/8	2
40	0400513	WASHER, 7/8	10
41	0400776	NUT, 5/16-18 JAM LOK	4
42	0401021	SCREW, 3/4-10X2 HHC GR8	12
43	0719585	D-RING, TOWING	4
44	0723437	CHANNEL SUPPORT VULCAN	2
45	0724349	PLATE, JACK LEG COVER	2
46	0724499	PIN - UPPER JACK LEG CYL	2
47	0725807	PLATE, BEARING KEEPER	2
48	0810005	PIN - FORK RETAINING	2
49	0810342	SUBFRAME V70V100 3 WINCH	1
50	0911746	HYD TANK ASSY VULC XTRA WINCH	1
51	0912023	CONTROL STATION ASSY STD WINCH	1
52	9015738	HOLDING VALVE MHB-015-L	2
53	9018241	SINGLE TUBE CLAMP-1	2
54	9018254	5/8 TUBE CLAMP SM2160-PP	18
55	9018255	1/2 TUBE CLAMP FM2127-PP	12
56	9018256	3/4 TUBE CLAMP SM3190-PP	6
57	9041010	1/4 NC X 2 1/4 HHCS GR8	2
58	9041011	1/4 NC X 2 1/2 HHCS PL GR8	8
59	9041402	1/2 NC X 1 1/4 HHCS PLT GR8	8
60	9043950	5/8 NC X 1 1/2 HHCS PL GR 8	2
61	9053041	BEARING-SPHERICAL TORRIN	2
62	915770002	8AT2(8T90S-8T90S) HCL	2
63	930202500	PIVOT BLOCK WELD'T	2
64	930202504	TIE PLATE - BOOM PIVOT A	2
65	930202505	WASHER PLATE - BOOM PIVO	4
66	9402970	TOOLBOX MTG. PAD	4
67	945020001	WASHER PLATE-LOWER LIFT	2
68	945351500	PIN WELD'T LOWER LIFT CY	2
69	945720000	JACK LEG CYLINDER - 45/	2
70	946700000	45/50 BOOM LIFT CYLINDER	2
71	946770001	6AT2(6T90S-6T90S) HCL	2
72	GA0215	PIN-"D" RING	4

0911746, HYD TANK ASSEMBLY VULCAN XTRA WINCH

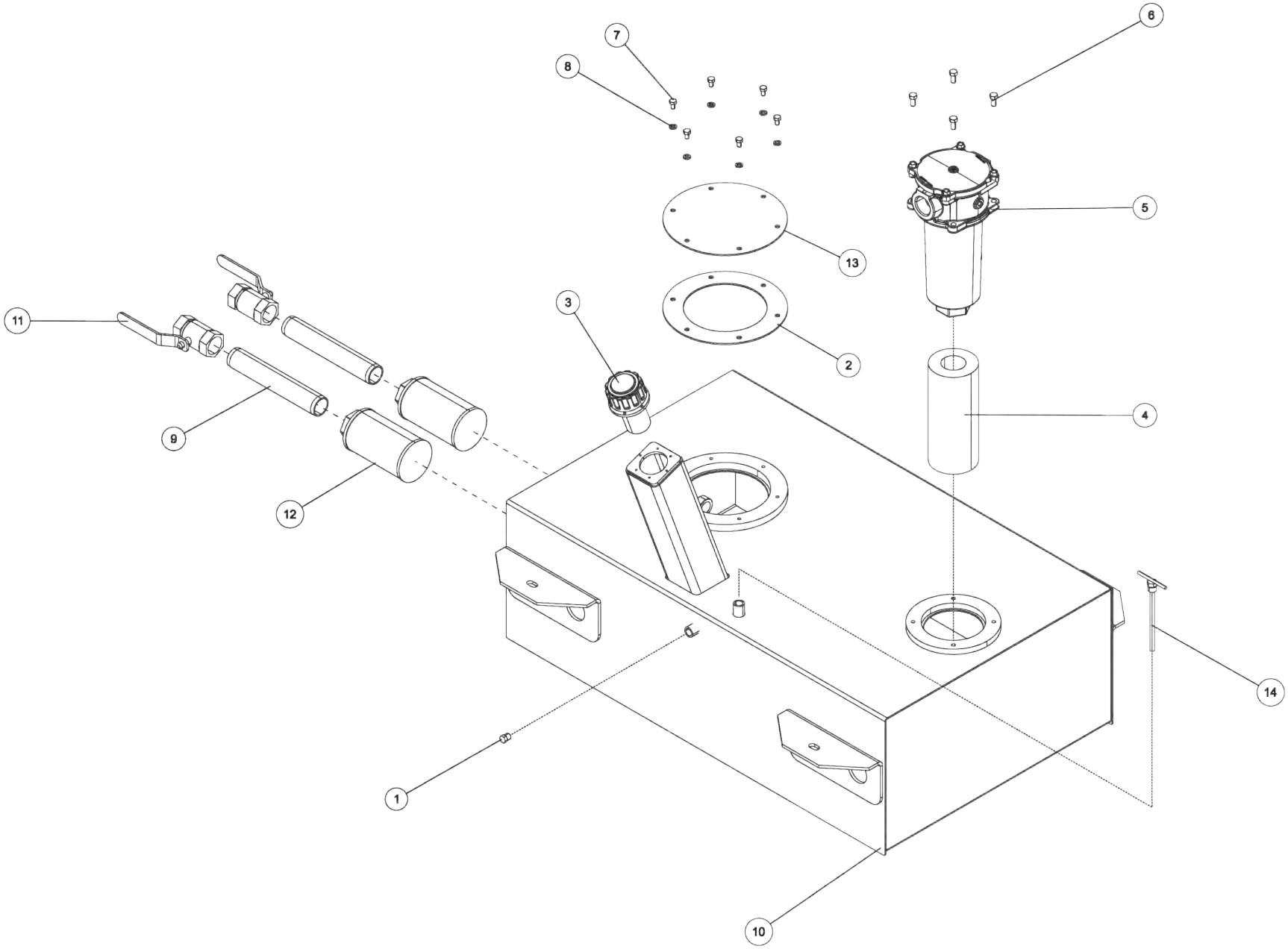

0911746, HYD TANK ASSEMBLY VULCAN XTRA WINCH (cont'd)

ITEM	PART NUMBER	DESCRIPTION	QTY
--	0911746	HYD TANK ASSEMBLY VULCAN XTRA WINCH	
1	0301618	FITTING, BRASS PLUG 1/4	1
2	03024991	GASKET- RESERVOIR	1
3	0305006	FILLER CAP (GO205, FB194)	1
4	0310636	ELEMENT, FILTER	1
5	0312601	FILTER ASSY-ZINGA TR-1616-25-1	1
6	0400121	SCREW, 3/8-16X3/4 HHC GR5	4
7	0400233	SCREW, 5/16-18X1/2 HHC GR5	6
8	0400464	LKWASHER, 5/16	6
9	07026183	PIPE, STRAINER 1-1/4 X 9-1/2	2
10	0810390	HYD. TANK WELDMENT	1
11	9015571	BALL VALVE - 1 1/4 CV5	2
12	9018139	SUCT. STRAINER LHA SEH-2	2
13	9401408	INSPECT COVER	1
14	9401418	DIPSTICK WELDMENT HYDR TANK	1

0912023, CONTROL STATION ASSEMBLY STD WINCH

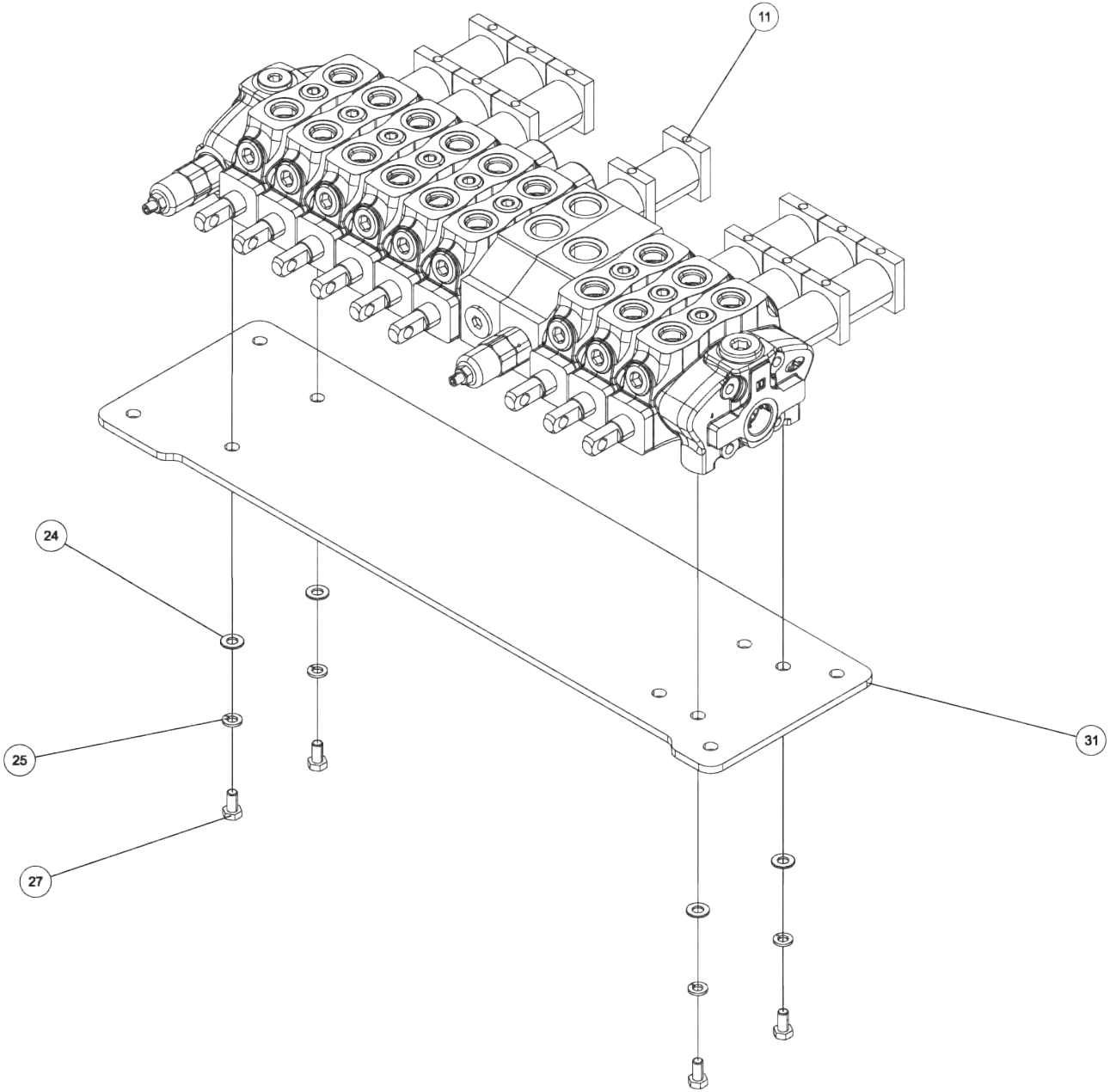

0912023, CONTROL STATION ASSEMBLY STD WINCH (cont'd)

ITEM	PART NUMBER	DESCRIPTION	QTY
--	0912023	CONTROL STATION ASSEMBLY STD WINCH	
1	0300041	CONNECTOR, 8MJ-8MB	9
2	0301388	ELBOW, 8MJ-8MB90	1
3	0301619	FITT, 6MJ-6MJ-6MB BRANCH TEE	2
4	0301783	FIT-STR THRD O-RING PLUG 10MB	2
5	0303079	ADAPTER, 10MJ-8MB	5
6	0303520	FITTING, ELL 90 DEG	1
7	0306984	FITT, HYD ELB 12MB-12MJ90 W/HO	2
8	0307404	FITTING, HYD 16MJ-10MB	3
9	0310842	HYD TUBE ASSY, RH WINCH - A	1
10	0311712	FITTING ADAPTER STR	2
11	0312420	VALVE - 9 SPOOL SD8 MID-INLET	1
12	0312426	TUBE - HYD 1/2 - BOOM LIFT	2
13	0312427	TUBE - HYD 1 - RETURN	1
14	0312428	TUBE - HYD 1 - RETURN	1
15	0312429	TUBE - HYD 3/4 -PRESSURE FRONT	1
16	0312430	TUBE - HYD 3/4 -PRESSURE REAR	1
17	0312433	TUBE - HYD 5/8 - REAR WINCH	1
18	0312434	TUBE - HYD 1/2 -LH JACK LEG	1
19	0400126	SCREW, 3/8-16X1 HHC GR5	8
20	0400382	NUT, 5/16-18 LOK	4
21	0400392	NUT, 3/8-16 LOK	4
22	0400393	NUT, 3/8-16 JAM	16
23	0400412	NUT, 1/2-20 JAM	16
24	0400463	WASHER, 5/16	18
25	0400464	LKWASHER, 5/16	4
26	0400480	WASHER, 3/8	12
27	0410533	SCREW, M8-1.25X16 HHC 10.9	4

ITEM	PART NUMBER	DESCRIPTION	QTY
28	0717208	HANDLE - SPACER(1 HNDL SPACER)	2
29	0724999	LH CONTROL ROD SHORT	8
30	0725000	RH CONTROL ROD SHORT	8
31	0726340	PLATE - VALVE MTG -VUL 3-WINCH	1
32	0810126	CHANNEL WLDMT-DCV FRMDUAL CTLS	2
33	0810440	CONTROL LUG WELD'T - MED	2
34	0810441	CONTROL LUG WELD'T - LONG	2
35	0810442	CONTROL LUG WELD'T - SHORT	4
36	09007528	COVER ASSEMBLY	1
37	0911816	CONTROL HANDLE ASSY - SHORT	8
38	0911817	CONTROL HANDLE ASSY - LONG	8
39	9041108	5/16 NC X 1 3/4 HHCS PL GR8	4
40	9043371	6 MM LOCKNUT FOR 9043817	8
41	9043713	M8 X 20 SOC SHOULDER BOL	8
42	9048513	SPERICAL ROD END REBPJH-	16
43	930400001	PIN - CONTROL HANDLE PIV	2
44	930400009	BOTTOM PLATE - DCV DUAL	1
45	930760010	TUBE, HYD 1/2 X 17 15/16 RH ST	1
46	930760011	TUBE, HYD 1/2 X 17 13/16 RH ST	1
47	946760003	TUBE, HYD 5/8 X 32 9/16 MAIN B	2
48	946760004	TUBE, HYD 1/2 X 34 7/16 ST.EXT	1
49	946760005	TUBE, HYD 1/2 X 34 7/16 ST.EXT	1
50	946760006	TUBE, HYD 1/2 X 36 1/16 ST.TIL	1
51	946760007	TUBE, HYD 1/2 X 36 1/16 ST.TIL	1
52	946760008	TUBE, HYD 1/2 LH STIFFLEG	1
53	946760010	TUBE, HYD 5/8 X 40 11/16 FR.WI	1
54	946760011	TUBE, HYD 5/8 X 40 11/16 FR.WI	1

0912023, CONTROL STATION ASSEMBLY STD WINCH (cont'd)

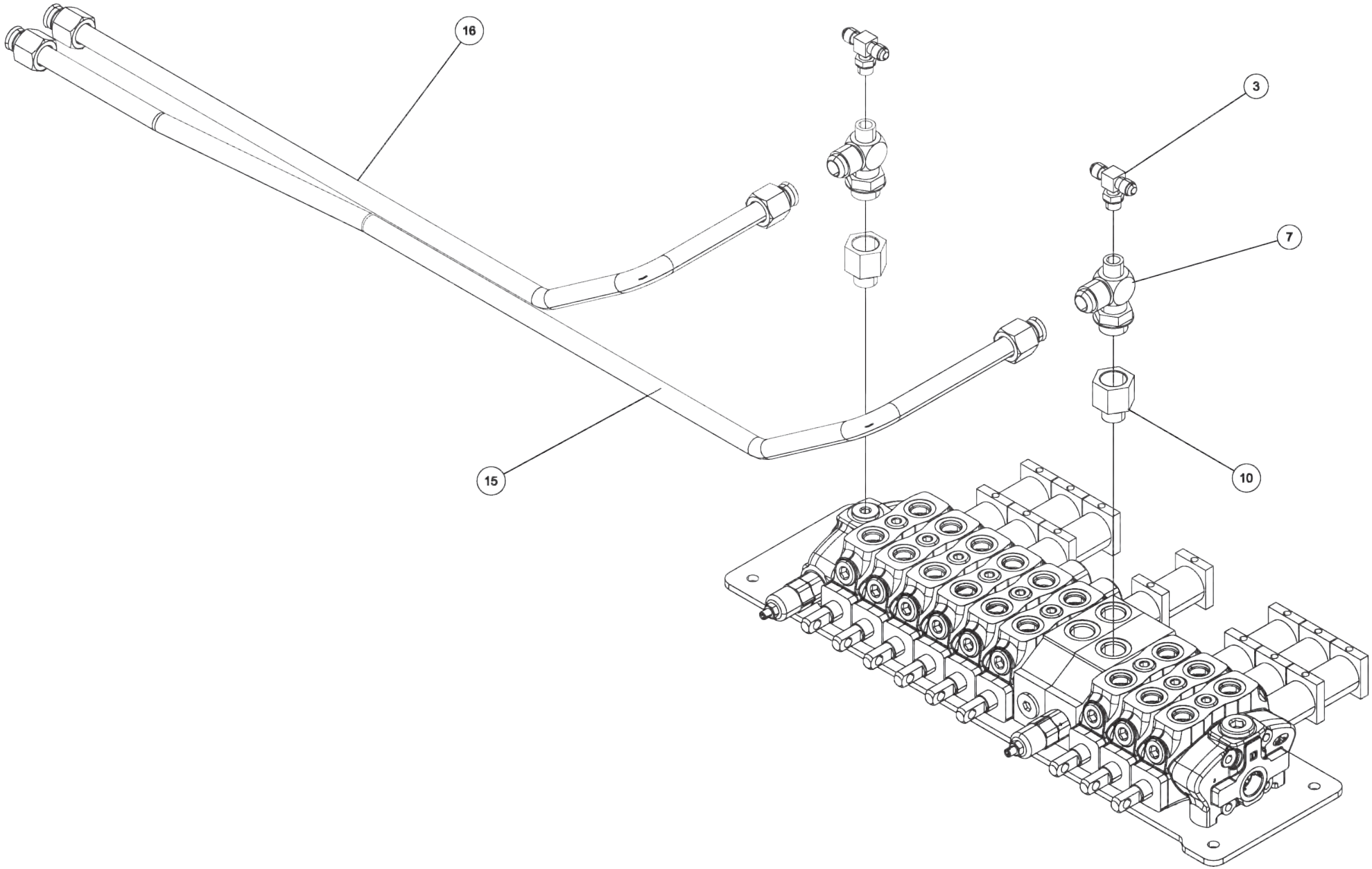

0912023, CONTROL STATION ASSEMBLY STD WINCH (cont'd)

ITEM	PART NUMBER	DESCRIPTION	QTY
--	0912023	CONTROL STATION ASSEMBLY STD WINCH	
1	0300041	CONNECTOR, 8MJ-8MB	9
2	0301388	ELBOW, 8MJ-8MB90	1
3	0301619	FITT, 6MJ-6MJ-6MB BRANCH TEE	2
4	0301783	FIT-STR THRD O-RING PLUG 10MB	2
5	0303079	ADAPTER, 10MJ-8MB	5
6	0303520	FITTING, ELL 90 DEG	1
7	0306984	FITT, HYD ELB 12MB-12MJ90 W/HO	2
8	0307404	FITTING, HYD 16MJ-10MB	3
9	0310842	HYD TUBE ASSY, RH WINCH - A	1
10	0311712	FITTING ADAPTER STR	2
11	0312420	VALVE - 9 SPOOL SD8 MID-INLET	1
12	0312426	TUBE - HYD 1/2 - BOOM LIFT	2
13	0312427	TUBE - HYD 1 - RETURN	1
14	0312428	TUBE - HYD 1 - RETURN	1
15	0312429	TUBE - HYD 3/4 -PRESSURE FRONT	1
16	0312430	TUBE - HYD 3/4 -PRESSURE REAR	1
17	0312433	TUBE - HYD 5/8 - REAR WINCH	1
18	0312434	TUBE - HYD 1/2 -LH JACK LEG	1
19	0400126	SCREW, 3/8-16X1 HHC GR5	8
20	0400382	NUT, 5/16-18 LOK	4
21	0400392	NUT, 3/8-16 LOK	4
22	0400393	NUT, 3/8-16 JAM	16
23	0400412	NUT, 1/2-20 JAM	16
24	0400463	WASHER, 5/16	18
25	0400464	LKWASHER, 5/16	4
26	0400480	WASHER, 3/8	12
27	0410533	SCREW, M8-1.25X16 HHC 10.9	4

ITEM	PART NUMBER	DESCRIPTION	QTY
28	0717208	HANDLE - SPACER(1 HNDL SPACER)	2
29	0724999	LH CONTROL ROD SHORT	8
30	0725000	RH CONTROL ROD SHORT	8
31	0726340	PLATE - VALVE MTG -VUL 3-WINCH	1
32	0810126	CHANNEL WLDMT-DCV FRMDUAL CTLS	2
33	0810440	CONTROL LUG WELD'T - MED	2
34	0810441	CONTROL LUG WELD'T - LONG	2
35	0810442	CONTROL LUG WELD'T - SHORT	4
36	09007528	COVER ASSEMBLY	1
37	0911816	CONTROL HANDLE ASSY - SHORT	8
38	0911817	CONTROL HANDLE ASSY - LONG	8
39	9041108	5/16 NC X 1 3/4 HHCS PL GR8	4
40	9043371	6 MM LOCKNUT FOR 9043817	8
41	9043713	M8 X 20 SOC SHOULDER BOL	8
42	9048513	SPERICAL ROD END REBPJH-	16
43	930400001	PIN - CONTROL HANDLE PIV	2
44	930400009	BOTTOM PLATE - DCV DUAL	1
45	930760010	TUBE, HYD 1/2 X 17 15/16 RH ST	1
46	930760011	TUBE, HYD 1/2 X 17 13/16 RH ST	1
47	946760003	TUBE, HYD 5/8 X 32 9/16 MAIN B	2
48	946760004	TUBE, HYD 1/2 X 34 7/16 ST.EXT	1
49	946760005	TUBE, HYD 1/2 X 34 7/16 ST.EXT	1
50	946760006	TUBE, HYD 1/2 X 36 1/16 ST.TIL	1
51	946760007	TUBE, HYD 1/2 X 36 1/16 ST.TIL	1
52	946760008	TUBE, HYD 1/2 LH STIFFLEG	1
53	946760010	TUBE, HYD 5/8 X 40 11/16 FR.WI	1
54	946760011	TUBE, HYD 5/8 X 40 11/16 FR.WI	1

0912023, CONTROL STATION ASSEMBLY STD WINCH (cont'd)

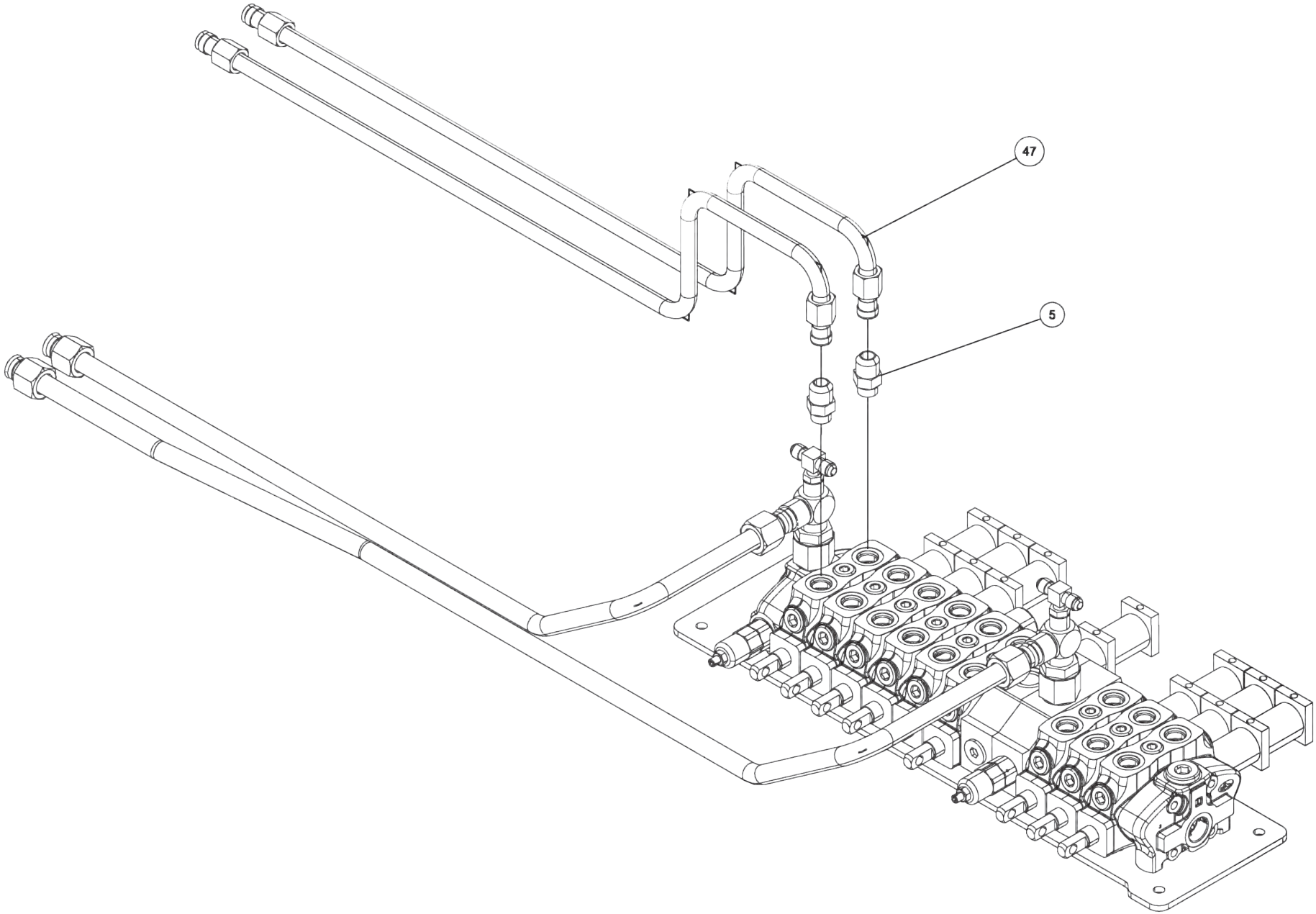

0912023, CONTROL STATION ASSEMBLY STD WINCH (cont'd)

ITEM	PART NUMBER	DESCRIPTION	QTY
--	0912023	CONTROL STATION ASSEMBLY STD WINCH	
1	0300041	CONNECTOR, 8MJ-8MB	9
2	0301388	ELBOW, 8MJ-8MB90	1
3	0301619	FITT, 6MJ-6MJ-6MB BRANCH TEE	2
4	0301783	FIT-STR THRD O-RING PLUG 10MB	2
5	0303079	ADAPTER, 10MJ-8MB	5
6	0303520	FITTING, ELL 90 DEG	1
7	0306984	FITT, HYD ELB 12MB-12MJ90 W/HO	2
8	0307404	FITTING, HYD 16MJ-10MB	3
9	0310842	HYD TUBE ASSY, RH WINCH - A	1
10	0311712	FITTING ADAPTER STR	2
11	0312420	VALVE - 9 SPOOL SD8 MID-INLET	1
12	0312426	TUBE - HYD 1/2 - BOOM LIFT	2
13	0312427	TUBE - HYD 1 - RETURN	1
14	0312428	TUBE - HYD 1 - RETURN	1
15	0312429	TUBE - HYD 3/4 -PRESSURE FRONT	1
16	0312430	TUBE - HYD 3/4 -PRESSURE REAR	1
17	0312433	TUBE - HYD 5/8 - REAR WINCH	1
18	0312434	TUBE - HYD 1/2 -LH JACK LEG	1
19	0400126	SCREW, 3/8-16X1 HHC GR5	8
20	0400382	NUT, 5/16-18 LOK	4
21	0400392	NUT, 3/8-16 LOK	4
22	0400393	NUT, 3/8-16 JAM	16
23	0400412	NUT, 1/2-20 JAM	16
24	0400463	WASHER, 5/16	18
25	0400464	LKWASHER, 5/16	4
26	0400480	WASHER, 3/8	12
27	0410533	SCREW, M8-1.25X16 HHC 10.9	4

ITEM	PART NUMBER	DESCRIPTION	QTY
28	0717208	HANDLE - SPACER(1 HNDL SPACER)	2
29	0724999	LH CONTROL ROD SHORT	8
30	0725000	RH CONTROL ROD SHORT	8
31	0726340	PLATE - VALVE MTG -VUL 3-WINCH	1
32	0810126	CHANNEL WLDMT-DCV FRMDUAL CTLS	2
33	0810440	CONTROL LUG WELD'T - MED	2
34	0810441	CONTROL LUG WELD'T - LONG	2
35	0810442	CONTROL LUG WELD'T - SHORT	4
36	09007528	COVER ASSEMBLY	1
37	0911816	CONTROL HANDLE ASSY - SHORT	8
38	0911817	CONTROL HANDLE ASSY - LONG	8
39	9041108	5/16 NC X 1 3/4 HHCS PL GR8	4
40	9043371	6 MM LOCKNUT FOR 9043817	8
41	9043713	M8 X 20 SOC SHOULDER BOL	8
42	9048513	SPERICAL ROD END REBPJH-	16
43	930400001	PIN - CONTROL HANDLE PIV	2
44	930400009	BOTTOM PLATE - DCV DUAL	1
45	930760010	TUBE, HYD 1/2 X 17 15/16 RH ST	1
46	930760011	TUBE, HYD 1/2 X 17 13/16 RH ST	1
47	946760003	TUBE, HYD 5/8 X 32 9/16 MAIN B	2
48	946760004	TUBE, HYD 1/2 X 34 7/16 ST.EXT	1
49	946760005	TUBE, HYD 1/2 X 34 7/16 ST.EXT	1
50	946760006	TUBE, HYD 1/2 X 36 1/16 ST.TIL	1
51	946760007	TUBE, HYD 1/2 X 36 1/16 ST.TIL	1
52	946760008	TUBE, HYD 1/2 LH STIFFLEG	1
53	946760010	TUBE, HYD 5/8 X 40 11/16 FR.WI	1
54	946760011	TUBE, HYD 5/8 X 40 11/16 FR.WI	1

0912023, CONTROL STATION ASSEMBLY STD WINCH (cont'd)

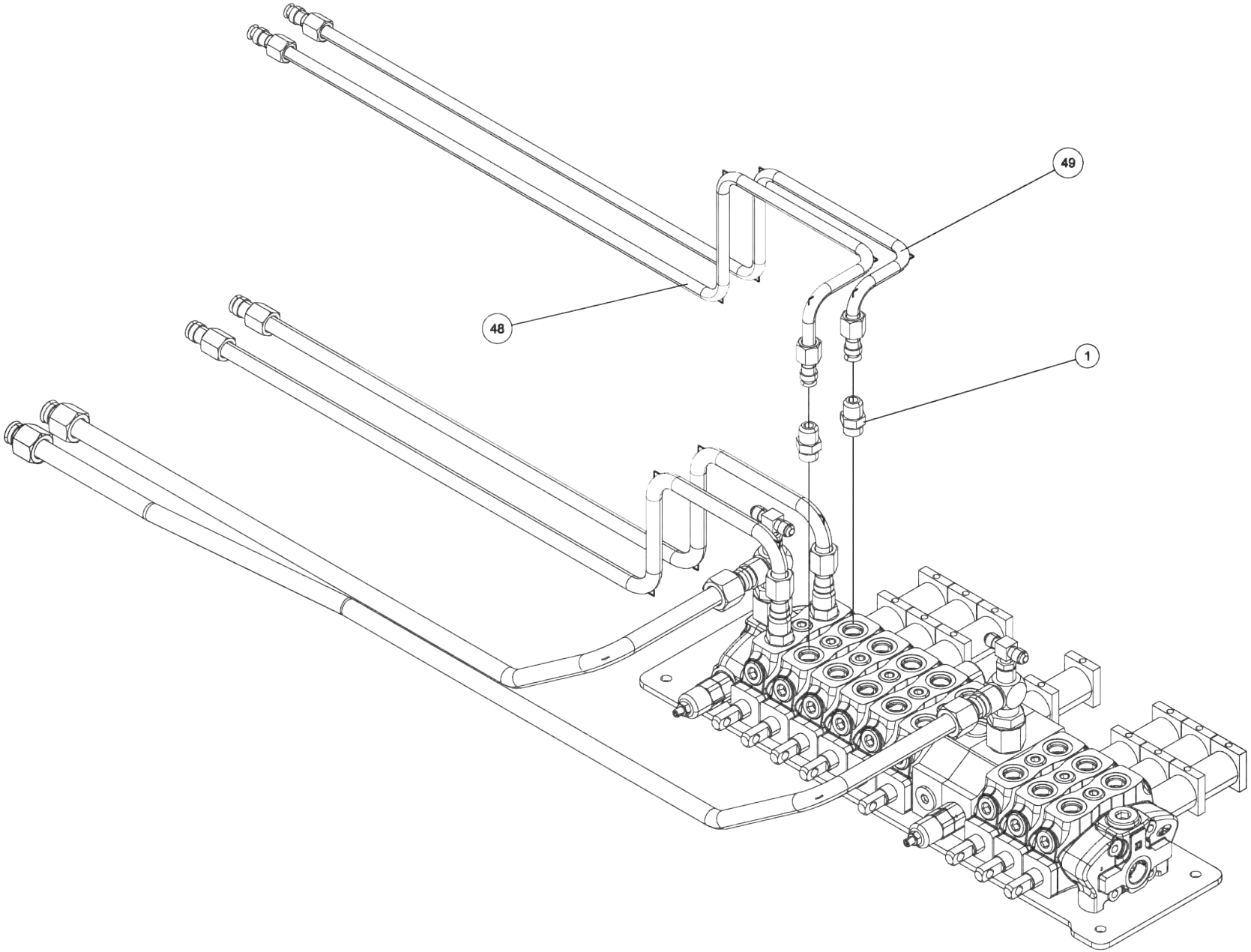

0912023, CONTROL STATION ASSEMBLY STD WINCH (cont'd)

ITEM	PART NUMBER	DESCRIPTION	QTY
--	0912023	CONTROL STATION ASSEMBLY STD WINCH	
1	0300041	CONNECTOR, 8MJ-8MB	9
2	0301388	ELBOW, 8MJ-8MB90	1
3	0301619	FITT, 6MJ-6MJ-6MB BRANCH TEE	2
4	0301783	FIT-STR THRD O-RING PLUG 10MB	2
5	0303079	ADAPTER, 10MJ-8MB	5
6	0303520	FITTING, ELL 90 DEG	1
7	0306984	FITT, HYD ELB 12MB-12MJ90 W/HO	2
8	0307404	FITTING, HYD 16MJ-10MB	3
9	0310842	HYD TUBE ASSY, RH WINCH - A	1
10	0311712	FITTING ADAPTER STR	2
11	0312420	VALVE - 9 SPOOL SD8 MID-INLET	1
12	0312426	TUBE - HYD 1/2 - BOOM LIFT	2
13	0312427	TUBE - HYD 1 - RETURN	1
14	0312428	TUBE - HYD 1 - RETURN	1
15	0312429	TUBE - HYD 3/4 -PRESSURE FRONT	1
16	0312430	TUBE - HYD 3/4 -PRESSURE REAR	1
17	0312433	TUBE - HYD 5/8 - REAR WINCH	1
18	0312434	TUBE - HYD 1/2 -LH JACK LEG	1
19	0400126	SCREW, 3/8-16X1 HHC GR5	8
20	0400382	NUT, 5/16-18 LOK	4
21	0400392	NUT, 3/8-16 LOK	4
22	0400393	NUT, 3/8-16 JAM	16
23	0400412	NUT, 1/2-20 JAM	16
24	0400463	WASHER, 5/16	18
25	0400464	LKWASHER, 5/16	4
26	0400480	WASHER, 3/8	12
27	0410533	SCREW, M8-1.25X16 HHC 10.9	4

ITEM	PART NUMBER	DESCRIPTION	QTY
28	0717208	HANDLE - SPACER(1 HNDL SPACER)	2
29	0724999	LH CONTROL ROD SHORT	8
30	0725000	RH CONTROL ROD SHORT	8
31	0726340	PLATE - VALVE MTG -VUL 3-WINCH	1
32	0810126	CHANNEL WLDMT-DCV FRMDUAL CTLS	2
33	0810440	CONTROL LUG WELD'T - MED	2
34	0810441	CONTROL LUG WELD'T - LONG	2
35	0810442	CONTROL LUG WELD'T - SHORT	4
36	09007528	COVER ASSEMBLY	1
37	0911816	CONTROL HANDLE ASSY - SHORT	8
38	0911817	CONTROL HANDLE ASSY - LONG	8
39	9041108	5/16 NC X 1 3/4 HHCS PL GR8	4
40	9043371	6 MM LOCKNUT FOR 9043817	8
41	9043713	M8 X 20 SOC SHOULDER BOL	8
42	9048513	SPERICAL ROD END REBPJH-	16
43	930400001	PIN - CONTROL HANDLE PIV	2
44	930400009	BOTTOM PLATE - DCV DUAL	1
45	930760010	TUBE, HYD 1/2 X 17 15/16 RH ST	1
46	930760011	TUBE, HYD 1/2 X 17 13/16 RH ST	1
47	946760003	TUBE, HYD 5/8 X 32 9/16 MAIN B	2
48	946760004	TUBE, HYD 1/2 X 34 7/16 ST.EXT	1
49	946760005	TUBE, HYD 1/2 X 34 7/16 ST.EXT	1
50	946760006	TUBE, HYD 1/2 X 36 1/16 ST.TIL	1
51	946760007	TUBE, HYD 1/2 X 36 1/16 ST.TIL	1
52	946760008	TUBE, HYD 1/2 LH STIFFLEG	1
53	946760010	TUBE, HYD 5/8 X 40 11/16 FR.WI	1
54	946760011	TUBE, HYD 5/8 X 40 11/16 FR.WI	1

0912023, CONTROL STATION ASSEMBLY STD WINCH (cont'd)

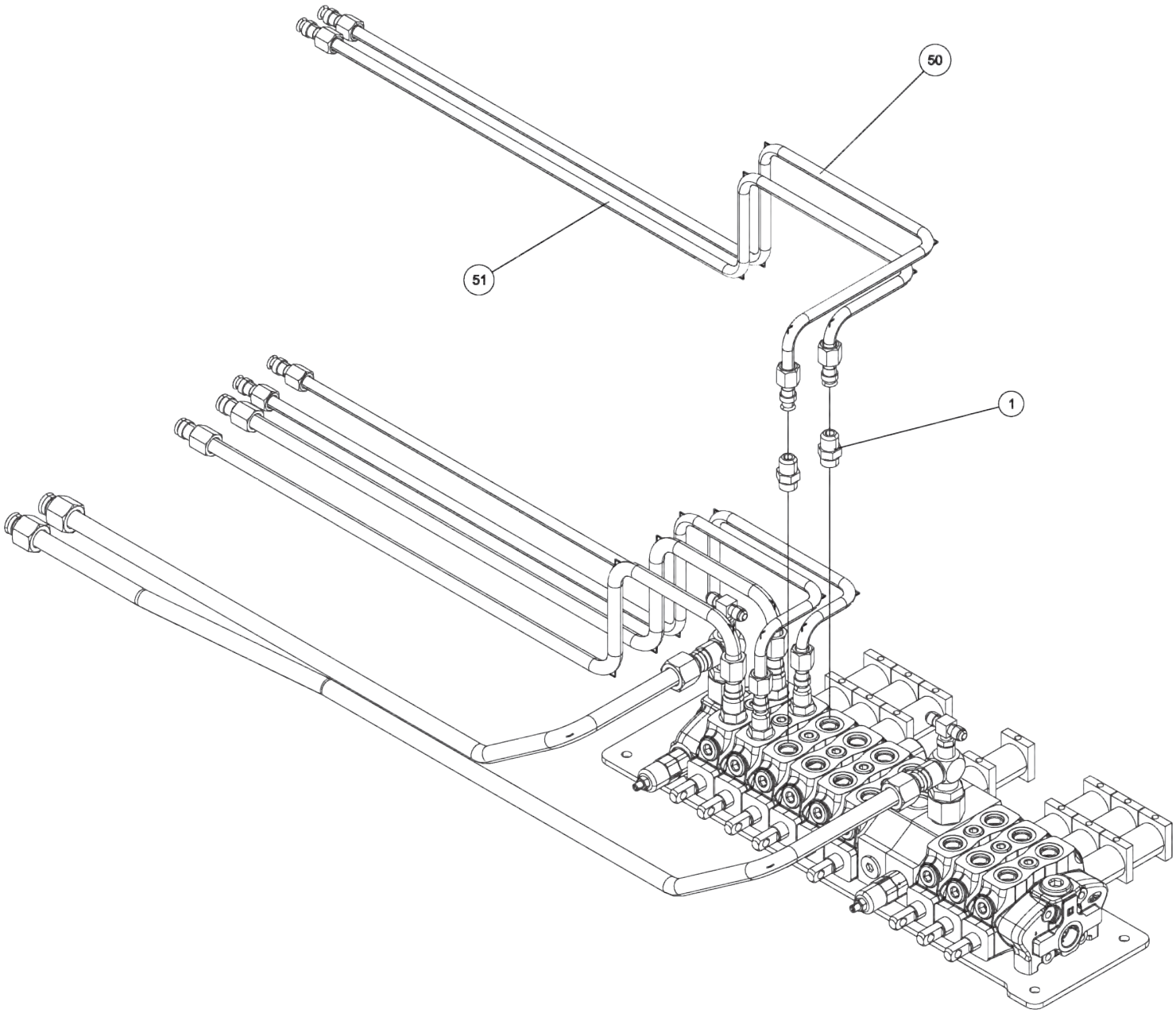

0912023, CONTROL STATION ASSEMBLY STD WINCH (cont'd)

ITEM	PART NUMBER	DESCRIPTION	QTY
--	0912023	CONTROL STATION ASSEMBLY STD WINCH	
1	0300041	CONNECTOR, 8MJ-8MB	9
2	0301388	ELBOW, 8MJ-8MB90	1
3	0301619	FITT, 6MJ-6MJ-6MB BRANCH TEE	2
4	0301783	FIT-STR THRD O-RING PLUG 10MB	2
5	0303079	ADAPTER, 10MJ-8MB	5
6	0303520	FITTING, ELL 90 DEG	1
7	0306984	FITT, HYD ELB 12MB-12MJ90 W/HO	2
8	0307404	FITTING, HYD 16MJ-10MB	3
9	0310842	HYD TUBE ASSY, RH WINCH - A	1
10	0311712	FITTING ADAPTER STR	2
11	0312420	VALVE - 9 SPOOL SD8 MID-INLET	1
12	0312426	TUBE - HYD 1/2 - BOOM LIFT	2
13	0312427	TUBE - HYD 1 - RETURN	1
14	0312428	TUBE - HYD 1 - RETURN	1
15	0312429	TUBE - HYD 3/4 -PRESSURE FRONT	1
16	0312430	TUBE - HYD 3/4 -PRESSURE REAR	1
17	0312433	TUBE - HYD 5/8 - REAR WINCH	1
18	0312434	TUBE - HYD 1/2 -LH JACK LEG	1
19	0400126	SCREW, 3/8-16X1 HHC GR5	8
20	0400382	NUT, 5/16-18 LOK	4
21	0400392	NUT, 3/8-16 LOK	4
22	0400393	NUT, 3/8-16 JAM	16
23	0400412	NUT, 1/2-20 JAM	16
24	0400463	WASHER, 5/16	18
25	0400464	LKWASHER, 5/16	4
26	0400480	WASHER, 3/8	12
27	0410533	SCREW, M8-1.25X16 HHC 10.9	4

ITEM	PART NUMBER	DESCRIPTION	QTY
28	0717208	HANDLE - SPACER(1 HNDL SPACER)	2
29	0724999	LH CONTROL ROD SHORT	8
30	0725000	RH CONTROL ROD SHORT	8
31	0726340	PLATE - VALVE MTG -VUL 3-WINCH	1
32	0810126	CHANNEL WLDMT-DCV FRMDUAL CTLS	2
33	0810440	CONTROL LUG WELD'T - MED	2
34	0810441	CONTROL LUG WELD'T - LONG	2
35	0810442	CONTROL LUG WELD'T - SHORT	4
36	09007528	COVER ASSEMBLY	1
37	0911816	CONTROL HANDLE ASSY - SHORT	8
38	0911817	CONTROL HANDLE ASSY - LONG	8
39	9041108	5/16 NC X 1 3/4 HHCS PL GR8	4
40	9043371	6 MM LOCKNUT FOR 9043817	8
41	9043713	M8 X 20 SOC SHOULDER BOL	8
42	9048513	SPERICAL ROD END REBPJH-	16
43	930400001	PIN - CONTROL HANDLE PIV	2
44	930400009	BOTTOM PLATE - DCV DUAL	1
45	930760010	TUBE, HYD 1/2 X 17 15/16 RH ST	1
46	930760011	TUBE, HYD 1/2 X 17 13/16 RH ST	1
47	946760003	TUBE, HYD 5/8 X 32 9/16 MAIN B	2
48	946760004	TUBE, HYD 1/2 X 34 7/16 ST.EXT	1
49	946760005	TUBE, HYD 1/2 X 34 7/16 ST.EXT	1
50	946760006	TUBE, HYD 1/2 X 36 1/16 ST.TIL	1
51	946760007	TUBE, HYD 1/2 X 36 1/16 ST.TIL	1
52	946760008	TUBE, HYD 1/2 LH STIFFLEG	1
53	946760010	TUBE, HYD 5/8 X 40 11/16 FR.WI	1
54	946760011	TUBE, HYD 5/8 X 40 11/16 FR.WI	1

0912023, CONTROL STATION ASSEMBLY STD WINCH (cont'd)

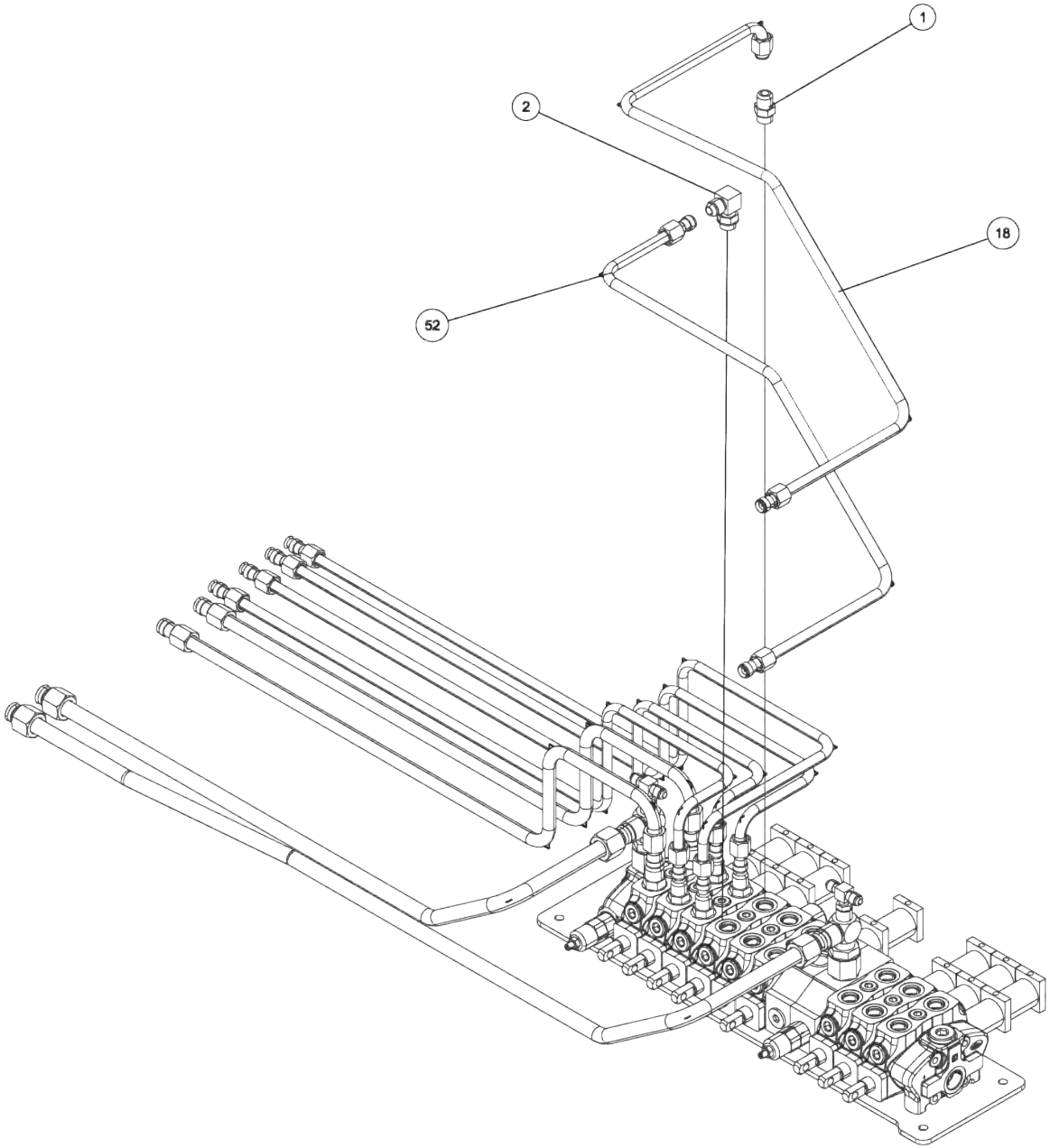

0912023, CONTROL STATION ASSEMBLY STD WINCH (cont'd)

ITEM	PART NUMBER	DESCRIPTION	QTY
--	0912023	CONTROL STATION ASSEMBLY STD WINCH	
1	0300041	CONNECTOR, 8MJ-8MB	9
2	0301388	ELBOW, 8MJ-8MB90	1
3	0301619	FITT, 6MJ-6MJ-6MB BRANCH TEE	2
4	0301783	FIT-STR THRD O-RING PLUG 10MB	2
5	0303079	ADAPTER, 10MJ-8MB	5
6	0303520	FITTING, ELL 90 DEG	1
7	0306984	FITT, HYD ELB 12MB-12MJ90 W/HO	2
8	0307404	FITTING, HYD 16MJ-10MB	3
9	0310842	HYD TUBE ASSY, RH WINCH - A	1
10	0311712	FITTING ADAPTER STR	2
11	0312420	VALVE - 9 SPOOL SD8 MID-INLET	1
12	0312426	TUBE - HYD 1/2 - BOOM LIFT	2
13	0312427	TUBE - HYD 1 - RETURN	1
14	0312428	TUBE - HYD 1 - RETURN	1
15	0312429	TUBE - HYD 3/4 -PRESSURE FRONT	1
16	0312430	TUBE - HYD 3/4 -PRESSURE REAR	1
17	0312433	TUBE - HYD 5/8 - REAR WINCH	1
18	0312434	TUBE - HYD 1/2 -LH JACK LEG	1
19	0400126	SCREW, 3/8-16X1 HHC GR5	8
20	0400382	NUT, 5/16-18 LOK	4
21	0400392	NUT, 3/8-16 LOK	4
22	0400393	NUT, 3/8-16 JAM	16
23	0400412	NUT, 1/2-20 JAM	16
24	0400463	WASHER, 5/16	18
25	0400464	LKWASHER, 5/16	4
26	0400480	WASHER, 3/8	12
27	0410533	SCREW, M8-1.25X16 HHC 10.9	4

ITEM	PART NUMBER	DESCRIPTION	QTY
28	0717208	HANDLE - SPACER(1 HNDL SPACER)	2
29	0724999	LH CONTROL ROD SHORT	8
30	0725000	RH CONTROL ROD SHORT	8
31	0726340	PLATE - VALVE MTG -VUL 3-WINCH	1
32	0810126	CHANNEL WLDMT-DCV FRMDUAL CTLS	2
33	0810440	CONTROL LUG WELD'T - MED	2
34	0810441	CONTROL LUG WELD'T - LONG	2
35	0810442	CONTROL LUG WELD'T - SHORT	4
36	09007528	COVER ASSEMBLY	1
37	0911816	CONTROL HANDLE ASSY - SHORT	8
38	0911817	CONTROL HANDLE ASSY - LONG	8
39	9041108	5/16 NC X 1 3/4 HHCS PL GR8	4
40	9043371	6 MM LOCKNUT FOR 9043817	8
41	9043713	M8 X 20 SOC SHOULDER BOL	8
42	9048513	SPERICAL ROD END REBPJH-	16
43	930400001	PIN - CONTROL HANDLE PIV	2
44	930400009	BOTTOM PLATE - DCV DUAL	1
45	930760010	TUBE, HYD 1/2 X 17 15/16 RH ST	1
46	930760011	TUBE, HYD 1/2 X 17 13/16 RH ST	1
47	946760003	TUBE, HYD 5/8 X 32 9/16 MAIN B	2
48	946760004	TUBE, HYD 1/2 X 34 7/16 ST.EXT	1
49	946760005	TUBE, HYD 1/2 X 34 7/16 ST.EXT	1
50	946760006	TUBE, HYD 1/2 X 36 1/16 ST.TIL	1
51	946760007	TUBE, HYD 1/2 X 36 1/16 ST.TIL	1
52	946760008	TUBE, HYD 1/2 LH STIFFLEG	1
53	946760010	TUBE, HYD 5/8 X 40 11/16 FR.WI	1
54	946760011	TUBE, HYD 5/8 X 40 11/16 FR.WI	1

0912023, CONTROL STATION ASSEMBLY STD WINCH (cont'd)

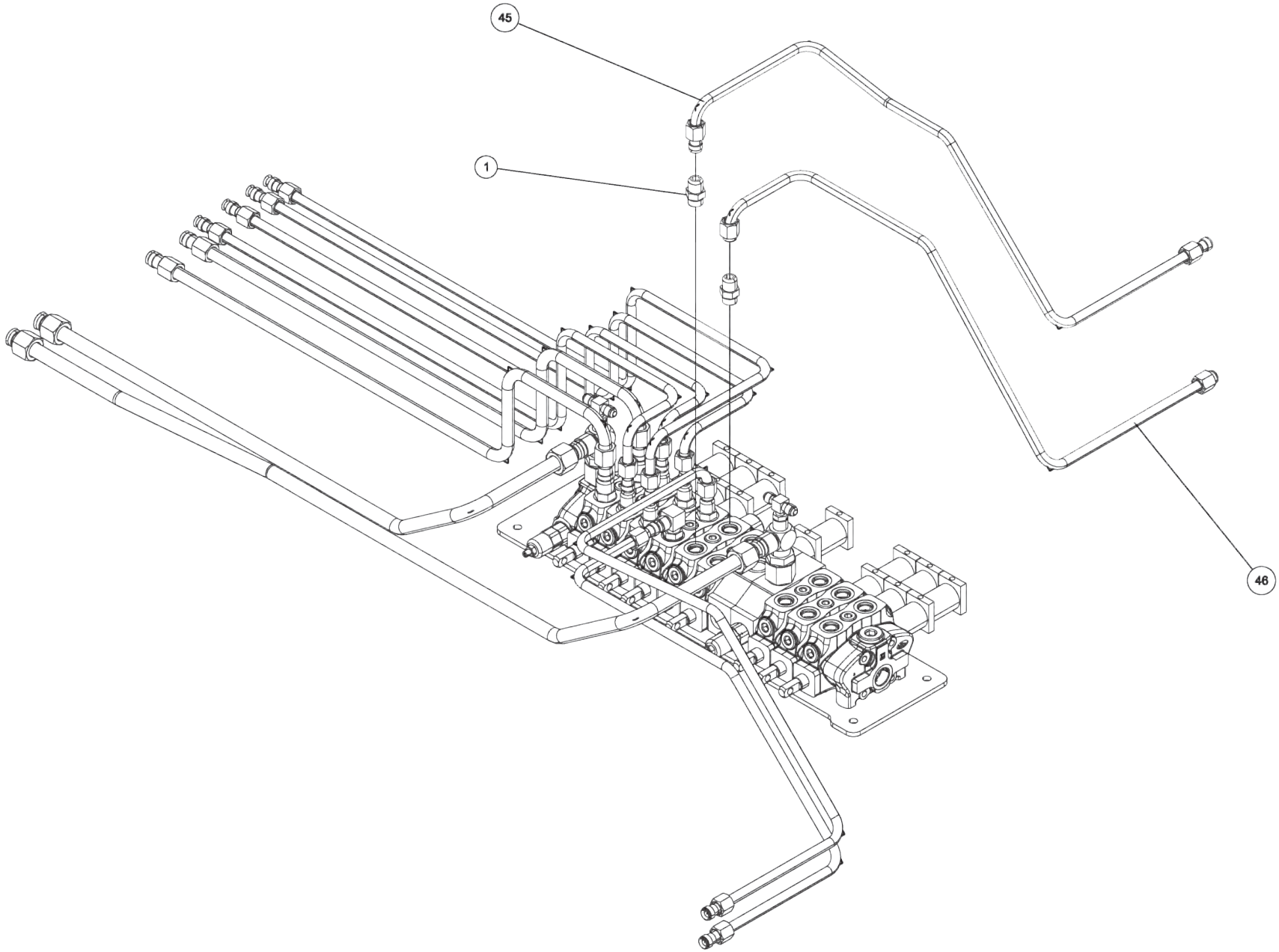

0912023, CONTROL STATION ASSEMBLY STD WINCH (cont'd)

ITEM	PART NUMBER	DESCRIPTION	QTY
--	0912023	CONTROL STATION ASSEMBLY STD WINCH	
1	0300041	CONNECTOR, 8MJ-8MB	9
2	0301388	ELBOW, 8MJ-8MB90	1
3	0301619	FITT, 6MJ-6MJ-6MB BRANCH TEE	2
4	0301783	FIT-STR THRD O-RING PLUG 10MB	2
5	0303079	ADAPTER, 10MJ-8MB	5
6	0303520	FITTING, ELL 90 DEG	1
7	0306984	FITT, HYD ELB 12MB-12MJ90 W/HO	2
8	0307404	FITTING, HYD 16MJ-10MB	3
9	0310842	HYD TUBE ASSY, RH WINCH - A	1
10	0311712	FITTING ADAPTER STR	2
11	0312420	VALVE - 9 SPOOL SD8 MID-INLET	1
12	0312426	TUBE - HYD 1/2 - BOOM LIFT	2
13	0312427	TUBE - HYD 1 - RETURN	1
14	0312428	TUBE - HYD 1 - RETURN	1
15	0312429	TUBE - HYD 3/4 -PRESSURE FRONT	1
16	0312430	TUBE - HYD 3/4 -PRESSURE REAR	1
17	0312433	TUBE - HYD 5/8 - REAR WINCH	1
18	0312434	TUBE - HYD 1/2 -LH JACK LEG	1
19	0400126	SCREW, 3/8-16X1 HHC GR5	8
20	0400382	NUT, 5/16-18 LOK	4
21	0400392	NUT, 3/8-16 LOK	4
22	0400393	NUT, 3/8-16 JAM	16
23	0400412	NUT, 1/2-20 JAM	16
24	0400463	WASHER, 5/16	18
25	0400464	LKWASHER, 5/16	4
26	0400480	WASHER, 3/8	12
27	0410533	SCREW, M8-1.25X16 HHC 10.9	4

ITEM	PART NUMBER	DESCRIPTION	QTY
28	0717208	HANDLE - SPACER(1 HNDL SPACER)	2
29	0724999	LH CONTROL ROD SHORT	8
30	0725000	RH CONTROL ROD SHORT	8
31	0726340	PLATE - VALVE MTG -VUL 3-WINCH	1
32	0810126	CHANNEL WLDMT-DCV FRMDUAL CTLS	2
33	0810440	CONTROL LUG WELD'T - MED	2
34	0810441	CONTROL LUG WELD'T - LONG	2
35	0810442	CONTROL LUG WELD'T - SHORT	4
36	09007528	COVER ASSEMBLY	1
37	0911816	CONTROL HANDLE ASSY - SHORT	8
38	0911817	CONTROL HANDLE ASSY - LONG	8
39	9041108	5/16 NC X 1 3/4 HHCS PL GR8	4
40	9043371	6 MM LOCKNUT FOR 9043817	8
41	9043713	M8 X 20 SOC SHOULDER BOL	8
42	9048513	SPERICAL ROD END REBPJH-	16
43	930400001	PIN - CONTROL HANDLE PIV	2
44	930400009	BOTTOM PLATE - DCV DUAL	1
45	930760010	TUBE, HYD 1/2 X 17 15/16 RH ST	1
46	930760011	TUBE, HYD 1/2 X 17 13/16 RH ST	1
47	946760003	TUBE, HYD 5/8 X 32 9/16 MAIN B	2
48	946760004	TUBE, HYD 1/2 X 34 7/16 ST.EXT	1
49	946760005	TUBE, HYD 1/2 X 34 7/16 ST.EXT	1
50	946760006	TUBE, HYD 1/2 X 36 1/16 ST.TIL	1
51	946760007	TUBE, HYD 1/2 X 36 1/16 ST.TIL	1
52	946760008	TUBE, HYD 1/2 LH STIFFLEG	1
53	946760010	TUBE, HYD 5/8 X 40 11/16 FR.WI	1
54	946760011	TUBE, HYD 5/8 X 40 11/16 FR.WI	1

0912023, CONTROL STATION ASSEMBLY STD WINCH (cont'd)

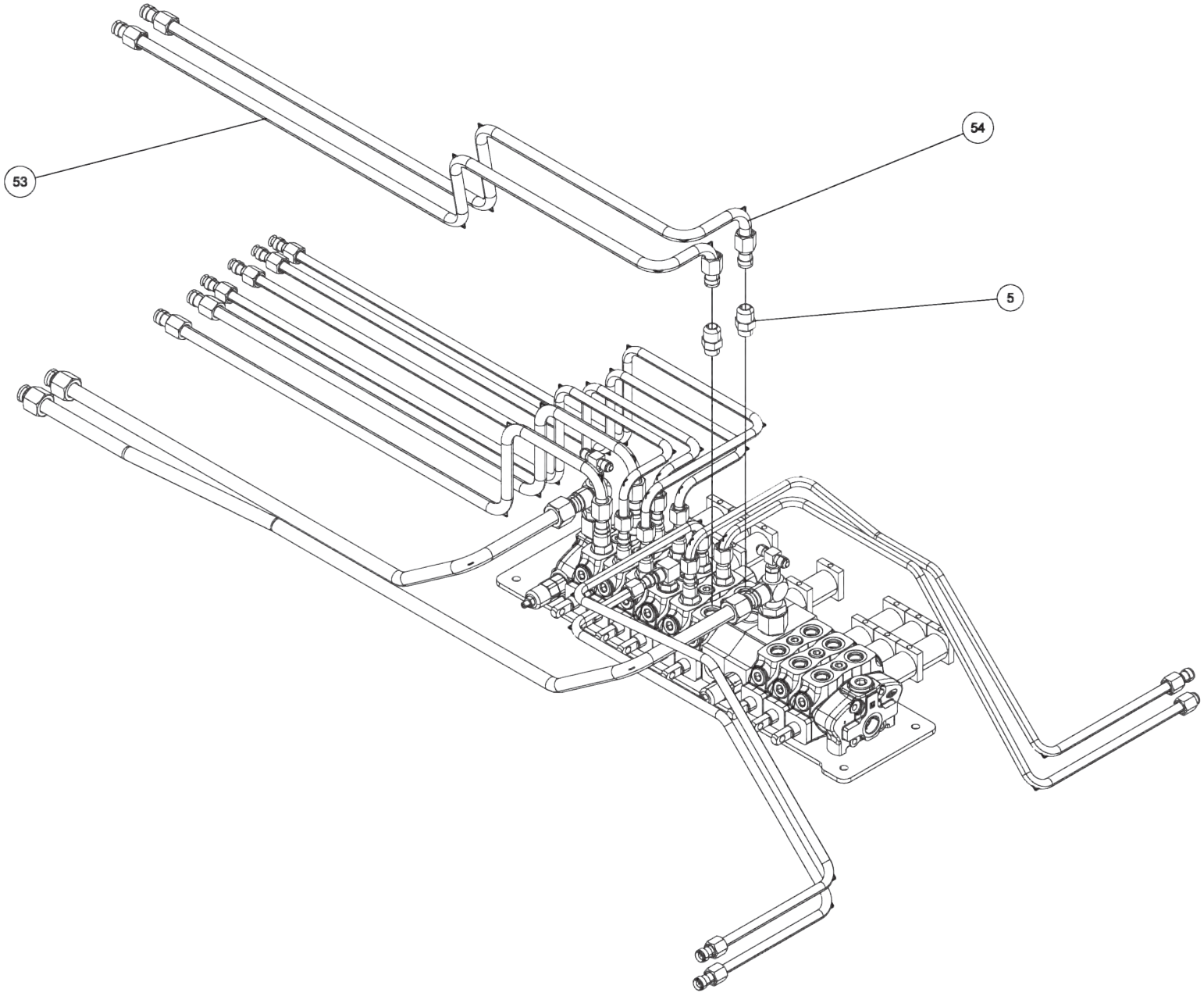

0912023, CONTROL STATION ASSEMBLY STD WINCH (cont'd)

ITEM	PART NUMBER	DESCRIPTION	QTY
--	0912023	CONTROL STATION ASSEMBLY STD WINCH	
1	0300041	CONNECTOR, 8MJ-8MB	9
2	0301388	ELBOW, 8MJ-8MB90	1
3	0301619	FITT, 6MJ-6MJ-6MB BRANCH TEE	2
4	0301783	FIT-STR THRD O-RING PLUG 10MB	2
5	0303079	ADAPTER, 10MJ-8MB	5
6	0303520	FITTING, ELL 90 DEG	1
7	0306984	FITT, HYD ELB 12MB-12MJ90 W/HO	2
8	0307404	FITTING, HYD 16MJ-10MB	3
9	0310842	HYD TUBE ASSY, RH WINCH - A	1
10	0311712	FITTING ADAPTER STR	2
11	0312420	VALVE - 9 SPOOL SD8 MID-INLET	1
12	0312426	TUBE - HYD 1/2 - BOOM LIFT	2
13	0312427	TUBE - HYD 1 - RETURN	1
14	0312428	TUBE - HYD 1 - RETURN	1
15	0312429	TUBE - HYD 3/4 -PRESSURE FRONT	1
16	0312430	TUBE - HYD 3/4 -PRESSURE REAR	1
17	0312433	TUBE - HYD 5/8 - REAR WINCH	1
18	0312434	TUBE - HYD 1/2 -LH JACK LEG	1
19	0400126	SCREW, 3/8-16X1 HHC GR5	8
20	0400382	NUT, 5/16-18 LOK	4
21	0400392	NUT, 3/8-16 LOK	4
22	0400393	NUT, 3/8-16 JAM	16
23	0400412	NUT, 1/2-20 JAM	16
24	0400463	WASHER, 5/16	18
25	0400464	LKWASHER, 5/16	4
26	0400480	WASHER, 3/8	12
27	0410533	SCREW, M8-1.25X16 HHC 10.9	4

ITEM	PART NUMBER	DESCRIPTION	QTY
28	0717208	HANDLE - SPACER(1 HNDL SPACER)	2
29	0724999	LH CONTROL ROD SHORT	8
30	0725000	RH CONTROL ROD SHORT	8
31	0726340	PLATE - VALVE MTG -VUL 3-WINCH	1
32	0810126	CHANNEL WLDMT-DCV FRMDUAL CTLS	2
33	0810440	CONTROL LUG WELD'T - MED	2
34	0810441	CONTROL LUG WELD'T - LONG	2
35	0810442	CONTROL LUG WELD'T - SHORT	4
36	09007528	COVER ASSEMBLY	1
37	0911816	CONTROL HANDLE ASSY - SHORT	8
38	0911817	CONTROL HANDLE ASSY - LONG	8
39	9041108	5/16 NC X 1 3/4 HHCS PL GR8	4
40	9043371	6 MM LOCKNUT FOR 9043817	8
41	9043713	M8 X 20 SOC SHOULDER BOL	8
42	9048513	SPERICAL ROD END REBPJH-	16
43	930400001	PIN - CONTROL HANDLE PIV	2
44	930400009	BOTTOM PLATE - DCV DUAL	1
45	930760010	TUBE, HYD 1/2 X 17 15/16 RH ST	1
46	930760011	TUBE, HYD 1/2 X 17 13/16 RH ST	1
47	946760003	TUBE, HYD 5/8 X 32 9/16 MAIN B	2
48	946760004	TUBE, HYD 1/2 X 34 7/16 ST.EXT	1
49	946760005	TUBE, HYD 1/2 X 34 7/16 ST.EXT	1
50	946760006	TUBE, HYD 1/2 X 36 1/16 ST.TIL	1
51	946760007	TUBE, HYD 1/2 X 36 1/16 ST.TIL	1
52	946760008	TUBE, HYD 1/2 LH STIFFLEG	1
53	946760010	TUBE, HYD 5/8 X 40 11/16 FR.WI	1
54	946760011	TUBE, HYD 5/8 X 40 11/16 FR.WI	1

0912023, CONTROL STATION ASSEMBLY STD WINCH (cont'd)

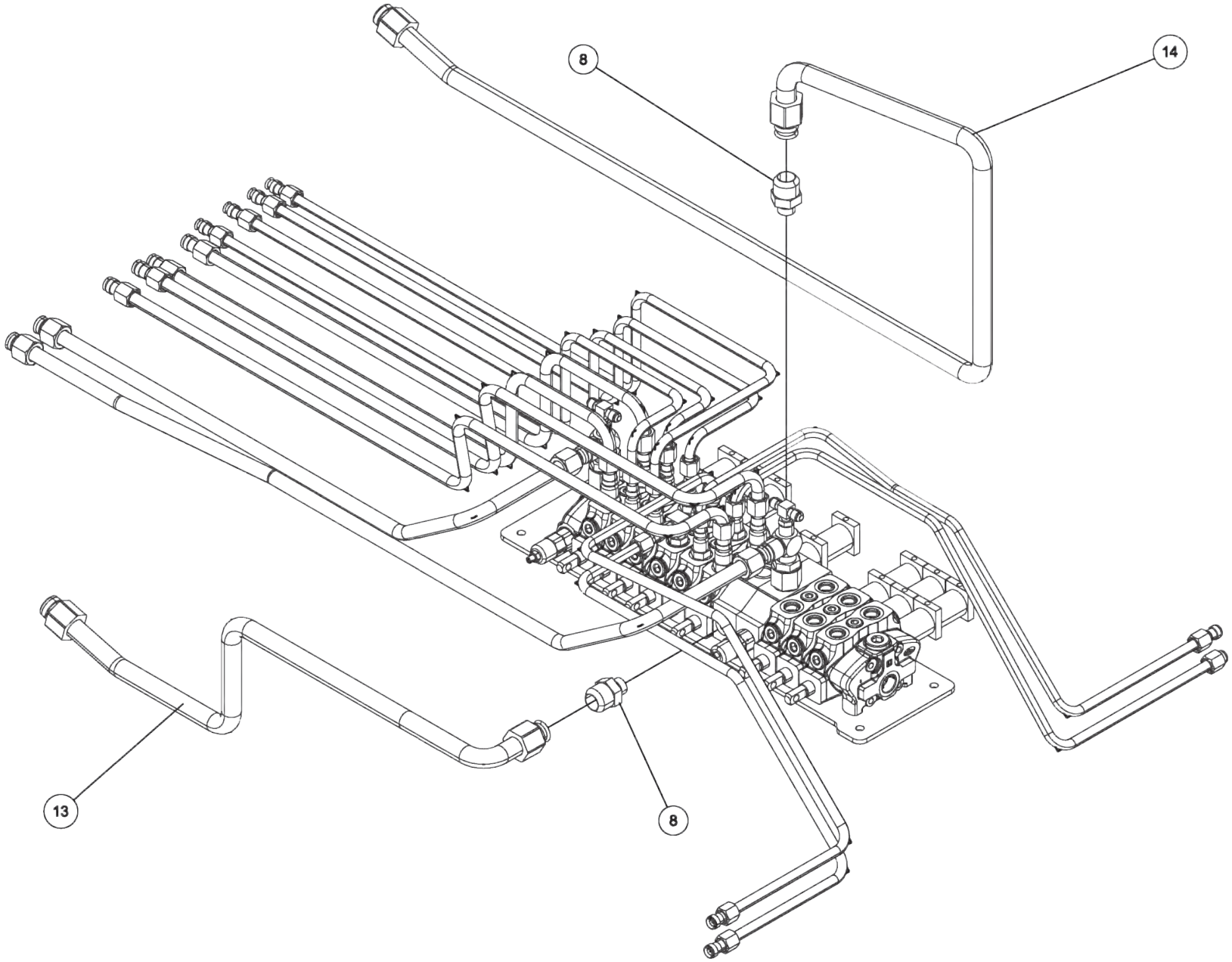

0912023, CONTROL STATION ASSEMBLY STD WINCH (cont'd)

ITEM	PART NUMBER	DESCRIPTION	QTY
--	0912023	CONTROL STATION ASSEMBLY STD WINCH	
1	0300041	CONNECTOR, 8MJ-8MB	9
2	0301388	ELBOW, 8MJ-8MB90	1
3	0301619	FITT, 6MJ-6MJ-6MB BRANCH TEE	2
4	0301783	FIT-STR THRD O-RING PLUG 10MB	2
5	0303079	ADAPTER, 10MJ-8MB	5
6	0303520	FITTING, ELL 90 DEG	1
7	0306984	FITT, HYD ELB 12MB-12MJ90 W/HO	2
8	0307404	FITTING, HYD 16MJ-10MB	3
9	0310842	HYD TUBE ASSY, RH WINCH - A	1
10	0311712	FITTING ADAPTER STR	2
11	0312420	VALVE - 9 SPOOL SD8 MID-INLET	1
12	0312426	TUBE - HYD 1/2 - BOOM LIFT	2
13	0312427	TUBE - HYD 1 - RETURN	1
14	0312428	TUBE - HYD 1 - RETURN	1
15	0312429	TUBE - HYD 3/4 -PRESSURE FRONT	1
16	0312430	TUBE - HYD 3/4 -PRESSURE REAR	1
17	0312433	TUBE - HYD 5/8 - REAR WINCH	1
18	0312434	TUBE - HYD 1/2 -LH JACK LEG	1
19	0400126	SCREW, 3/8-16X1 HHC GR5	8
20	0400382	NUT, 5/16-18 LOK	4
21	0400392	NUT, 3/8-16 LOK	4
22	0400393	NUT, 3/8-16 JAM	16
23	0400412	NUT, 1/2-20 JAM	16
24	0400463	WASHER, 5/16	18
25	0400464	LKWASHER, 5/16	4
26	0400480	WASHER, 3/8	12
27	0410533	SCREW, M8-1.25X16 HHC 10.9	4

ITEM	PART NUMBER	DESCRIPTION	QTY
28	0717208	HANDLE - SPACER(1 HNDL SPACER)	2
29	0724999	LH CONTROL ROD SHORT	8
30	0725000	RH CONTROL ROD SHORT	8
31	0726340	PLATE - VALVE MTG -VUL 3-WINCH	1
32	0810126	CHANNEL WLDMT-DCV FRMDUAL CTLS	2
33	0810440	CONTROL LUG WELD'T - MED	2
34	0810441	CONTROL LUG WELD'T - LONG	2
35	0810442	CONTROL LUG WELD'T - SHORT	4
36	09007528	COVER ASSEMBLY	1
37	0911816	CONTROL HANDLE ASSY - SHORT	8
38	0911817	CONTROL HANDLE ASSY - LONG	8
39	9041108	5/16 NC X 1 3/4 HHCS PL GR8	4
40	9043371	6 MM LOCKNUT FOR 9043817	8
41	9043713	M8 X 20 SOC SHOULDER BOL	8
42	9048513	SPERICAL ROD END REBPJH-	16
43	930400001	PIN - CONTROL HANDLE PIV	2
44	930400009	BOTTOM PLATE - DCV DUAL	1
45	930760010	TUBE, HYD 1/2 X 17 15/16 RH ST	1
46	930760011	TUBE, HYD 1/2 X 17 13/16 RH ST	1
47	946760003	TUBE, HYD 5/8 X 32 9/16 MAIN B	2
48	946760004	TUBE, HYD 1/2 X 34 7/16 ST.EXT	1
49	946760005	TUBE, HYD 1/2 X 34 7/16 ST.EXT	1
50	946760006	TUBE, HYD 1/2 X 36 1/16 ST.TIL	1
51	946760007	TUBE, HYD 1/2 X 36 1/16 ST.TIL	1
52	946760008	TUBE, HYD 1/2 LH STIFFLEG	1
53	946760010	TUBE, HYD 5/8 X 40 11/16 FR.WI	1
54	946760011	TUBE, HYD 5/8 X 40 11/16 FR.WI	1

0912023, CONTROL STATION ASSEMBLY STD WINCH (cont'd)

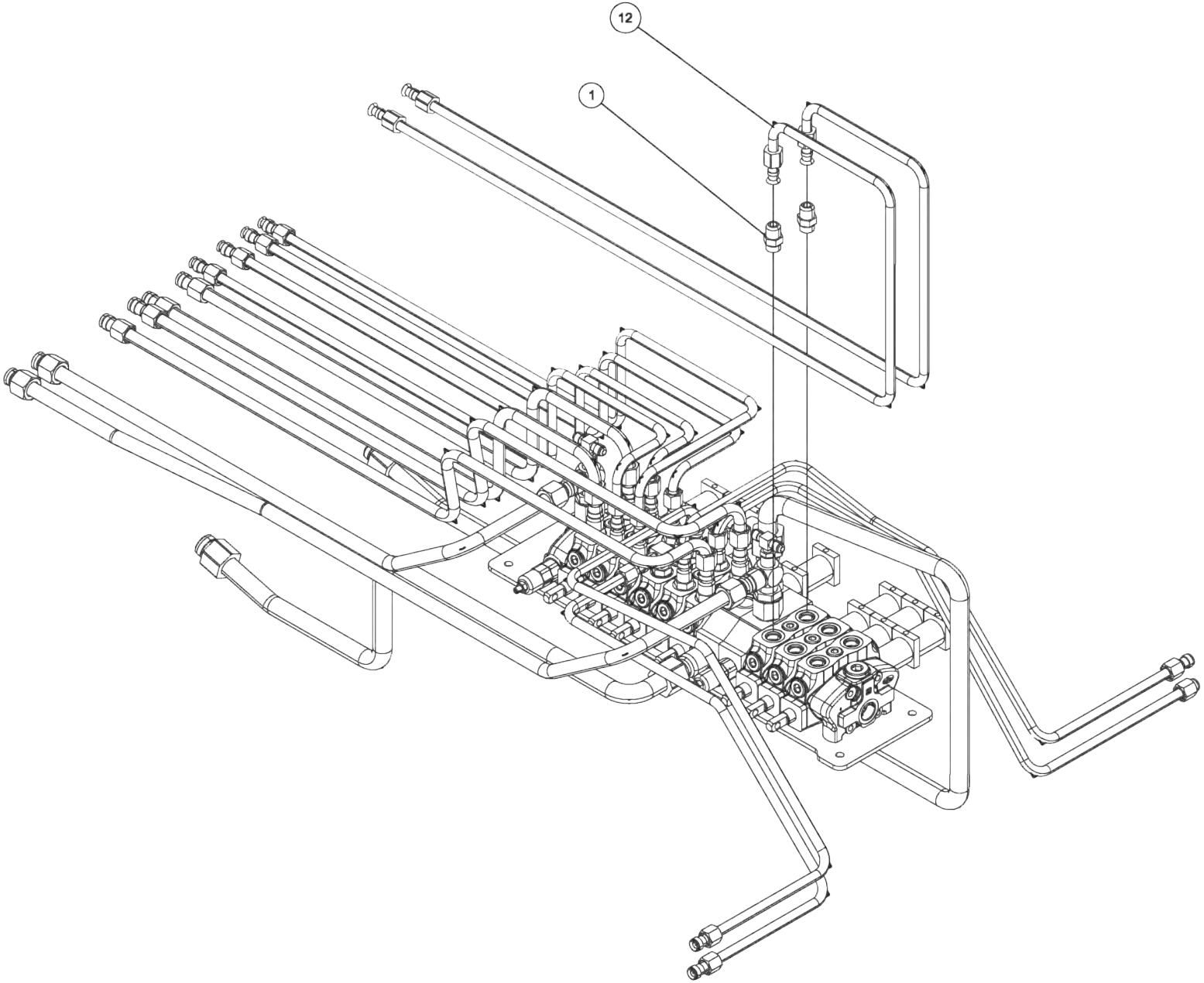

0912023, CONTROL STATION ASSEMBLY STD WINCH (cont'd)

ITEM	PART NUMBER	DESCRIPTION	QTY
--	0912023	CONTROL STATION ASSEMBLY STD WINCH	
1	0300041	CONNECTOR, 8MJ-8MB	9
2	0301388	ELBOW, 8MJ-8MB90	1
3	0301619	FITT, 6MJ-6MJ-6MB BRANCH TEE	2
4	0301783	FIT-STR THRD O-RING PLUG 10MB	2
5	0303079	ADAPTER, 10MJ-8MB	5
6	0303520	FITTING, ELL 90 DEG	1
7	0306984	FITT, HYD ELB 12MB-12MJ90 W/HO	2
8	0307404	FITTING, HYD 16MJ-10MB	3
9	0310842	HYD TUBE ASSY, RH WINCH - A	1
10	0311712	FITTING ADAPTER STR	2
11	0312420	VALVE - 9 SPOOL SD8 MID-INLET	1
12	0312426	TUBE - HYD 1/2 - BOOM LIFT	2
13	0312427	TUBE - HYD 1 - RETURN	1
14	0312428	TUBE - HYD 1 - RETURN	1
15	0312429	TUBE - HYD 3/4 -PRESSURE FRONT	1
16	0312430	TUBE - HYD 3/4 -PRESSURE REAR	1
17	0312433	TUBE - HYD 5/8 - REAR WINCH	1
18	0312434	TUBE - HYD 1/2 -LH JACK LEG	1
19	0400126	SCREW, 3/8-16X1 HHC GR5	8
20	0400382	NUT, 5/16-18 LOK	4
21	0400392	NUT, 3/8-16 LOK	4
22	0400393	NUT, 3/8-16 JAM	16
23	0400412	NUT, 1/2-20 JAM	16
24	0400463	WASHER, 5/16	18
25	0400464	LKWASHER, 5/16	4
26	0400480	WASHER, 3/8	12
27	0410533	SCREW, M8-1.25X16 HHC 10.9	4

ITEM	PART NUMBER	DESCRIPTION	QTY
28	0717208	HANDLE - SPACER(1 HNDL SPACER)	2
29	0724999	LH CONTROL ROD SHORT	8
30	0725000	RH CONTROL ROD SHORT	8
31	0726340	PLATE - VALVE MTG -VUL 3-WINCH	1
32	0810126	CHANNEL WLDMT-DCV FRMDUAL CTLS	2
33	0810440	CONTROL LUG WELD'T - MED	2
34	0810441	CONTROL LUG WELD'T - LONG	2
35	0810442	CONTROL LUG WELD'T - SHORT	4
36	09007528	COVER ASSEMBLY	1
37	0911816	CONTROL HANDLE ASSY - SHORT	8
38	0911817	CONTROL HANDLE ASSY - LONG	8
39	9041108	5/16 NC X 1 3/4 HHCS PL GR8	4
40	9043371	6 MM LOCKNUT FOR 9043817	8
41	9043713	M8 X 20 SOC SHOULDER BOL	8
42	9048513	SPERICAL ROD END REBPJH-	16
43	930400001	PIN - CONTROL HANDLE PIV	2
44	930400009	BOTTOM PLATE - DCV DUAL	1
45	930760010	TUBE, HYD 1/2 X 17 15/16 RH ST	1
46	930760011	TUBE, HYD 1/2 X 17 13/16 RH ST	1
47	946760003	TUBE, HYD 5/8 X 32 9/16 MAIN B	2
48	946760004	TUBE, HYD 1/2 X 34 7/16 ST.EXT	1
49	946760005	TUBE, HYD 1/2 X 34 7/16 ST.EXT	1
50	946760006	TUBE, HYD 1/2 X 36 1/16 ST.TIL	1
51	946760007	TUBE, HYD 1/2 X 36 1/16 ST.TIL	1
52	946760008	TUBE, HYD 1/2 LH STIFFLEG	1
53	946760010	TUBE, HYD 5/8 X 40 11/16 FR.WI	1
54	946760011	TUBE, HYD 5/8 X 40 11/16 FR.WI	1

0912023, CONTROL STATION ASSEMBLY STD WINCH (cont'd)

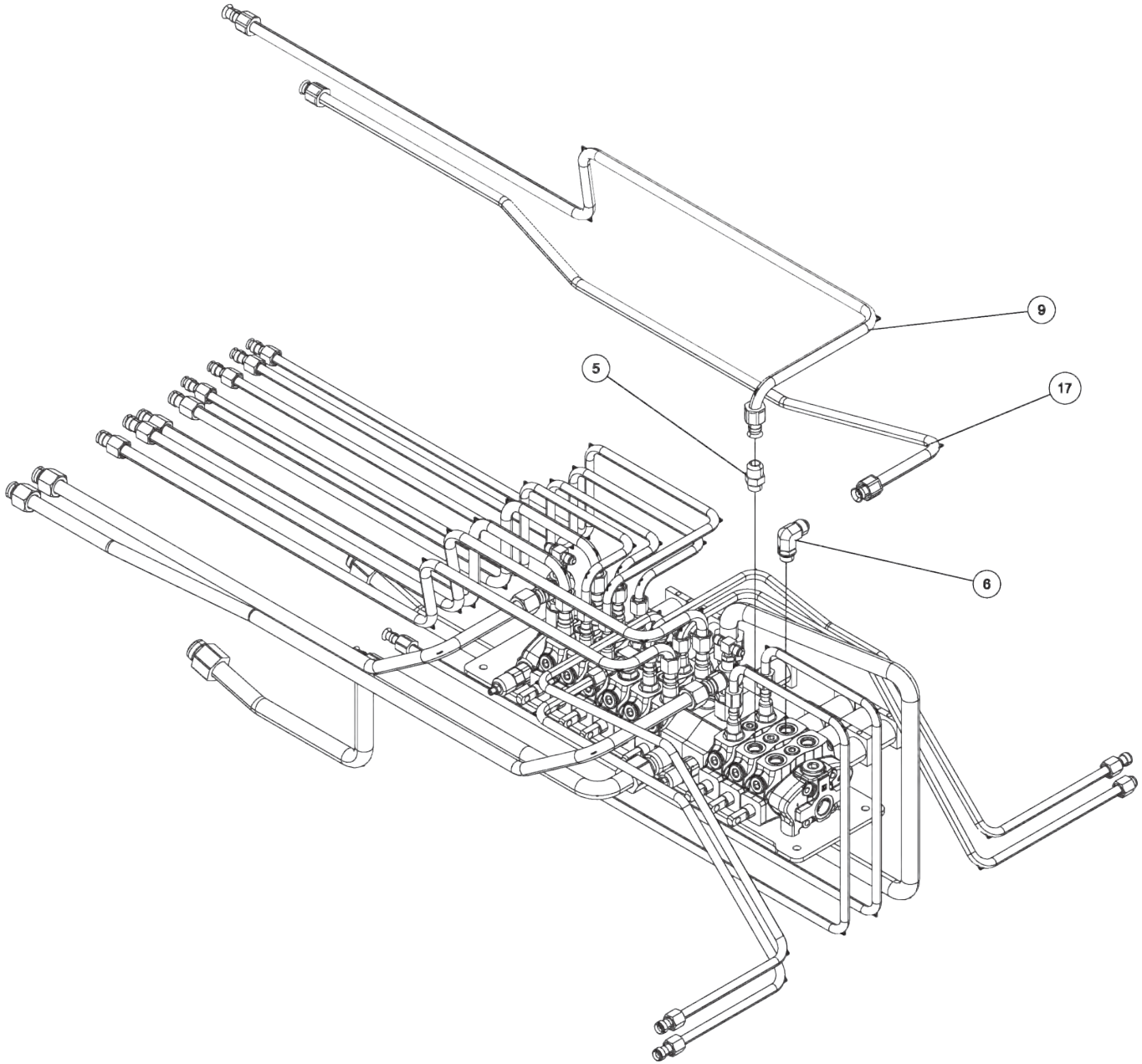

0912023, CONTROL STATION ASSEMBLY STD WINCH (cont'd)

ITEM	PART NUMBER	DESCRIPTION	QTY
--	0912023	CONTROL STATION ASSEMBLY STD WINCH	
1	0300041	CONNECTOR, 8MJ-8MB	9
2	0301388	ELBOW, 8MJ-8MB90	1
3	0301619	FITT, 6MJ-6MJ-6MB BRANCH TEE	2
4	0301783	FIT-STR THRD O-RING PLUG 10MB	2
5	0303079	ADAPTER, 10MJ-8MB	5
6	0303520	FITTING, ELL 90 DEG	1
7	0306984	FITT, HYD ELB 12MB-12MJ90 W/HO	2
8	0307404	FITTING, HYD 16MJ-10MB	3
9	0310842	HYD TUBE ASSY, RH WINCH - A	1
10	0311712	FITTING ADAPTER STR	2
11	0312420	VALVE - 9 SPOOL SD8 MID-INLET	1
12	0312426	TUBE - HYD 1/2 - BOOM LIFT	2
13	0312427	TUBE - HYD 1 - RETURN	1
14	0312428	TUBE - HYD 1 - RETURN	1
15	0312429	TUBE - HYD 3/4 -PRESSURE FRONT	1
16	0312430	TUBE - HYD 3/4 -PRESSURE REAR	1
17	0312433	TUBE - HYD 5/8 - REAR WINCH	1
18	0312434	TUBE - HYD 1/2 -LH JACK LEG	1
19	0400126	SCREW, 3/8-16X1 HHC GR5	8
20	0400382	NUT, 5/16-18 LOK	4
21	0400392	NUT, 3/8-16 LOK	4
22	0400393	NUT, 3/8-16 JAM	16
23	0400412	NUT, 1/2-20 JAM	16
24	0400463	WASHER, 5/16	18
25	0400464	LKWASHER, 5/16	4
26	0400480	WASHER, 3/8	12
27	0410533	SCREW, M8-1.25X16 HHC 10.9	4

ITEM	PART NUMBER	DESCRIPTION	QTY
28	0717208	HANDLE - SPACER(1 HNDL SPACER)	2
29	0724999	LH CONTROL ROD SHORT	8
30	0725000	RH CONTROL ROD SHORT	8
31	0726340	PLATE - VALVE MTG -VUL 3-WINCH	1
32	0810126	CHANNEL WLDMT-DCV FRMDUAL CTLS	2
33	0810440	CONTROL LUG WELD'T - MED	2
34	0810441	CONTROL LUG WELD'T - LONG	2
35	0810442	CONTROL LUG WELD'T - SHORT	4
36	09007528	COVER ASSEMBLY	1
37	0911816	CONTROL HANDLE ASSY - SHORT	8
38	0911817	CONTROL HANDLE ASSY - LONG	8
39	9041108	5/16 NC X 1 3/4 HHCS PL GR8	4
40	9043371	6 MM LOCKNUT FOR 9043817	8
41	9043713	M8 X 20 SOC SHOULDER BOL	8
42	9048513	SPERICAL ROD END REBPJH-	16
43	930400001	PIN - CONTROL HANDLE PIV	2
44	930400009	BOTTOM PLATE - DCV DUAL	1
45	930760010	TUBE, HYD 1/2 X 17 15/16 RH ST	1
46	930760011	TUBE, HYD 1/2 X 17 13/16 RH ST	1
47	946760003	TUBE, HYD 5/8 X 32 9/16 MAIN B	2
48	946760004	TUBE, HYD 1/2 X 34 7/16 ST.EXT	1
49	946760005	TUBE, HYD 1/2 X 34 7/16 ST.EXT	1
50	946760006	TUBE, HYD 1/2 X 36 1/16 ST.TIL	1
51	946760007	TUBE, HYD 1/2 X 36 1/16 ST.TIL	1
52	946760008	TUBE, HYD 1/2 LH STIFFLEG	1
53	946760010	TUBE, HYD 5/8 X 40 11/16 FR.WI	1
54	946760011	TUBE, HYD 5/8 X 40 11/16 FR.WI	1

0912023, CONTROL STATION ASSEMBLY STD WINCH (cont'd)

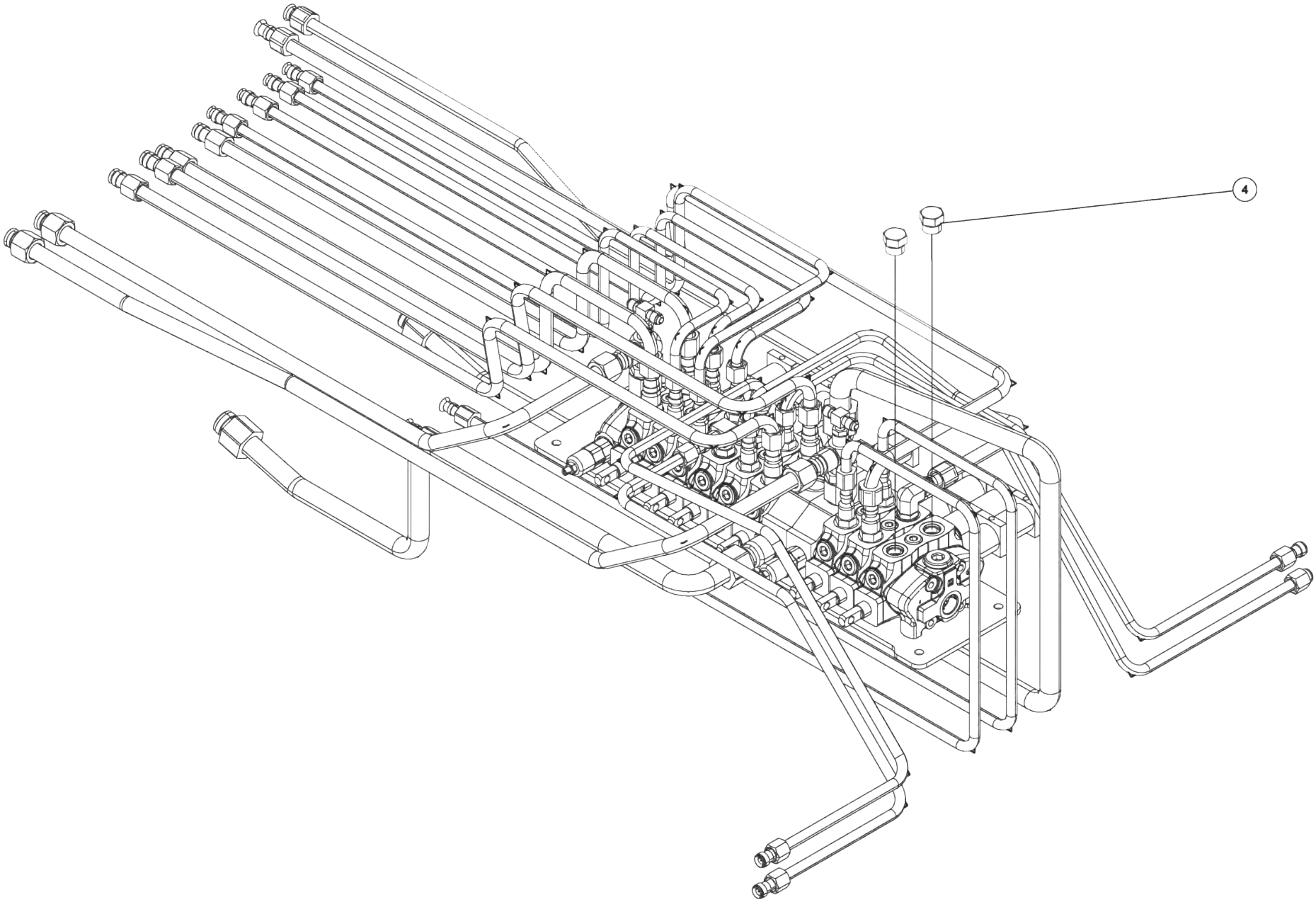

0912023, CONTROL STATION ASSEMBLY STD WINCH (cont'd)

ITEM	PART NUMBER	DESCRIPTION	QTY
--	0912023	CONTROL STATION ASSEMBLY STD WINCH	
1	0300041	CONNECTOR, 8MJ-8MB	9
2	0301388	ELBOW, 8MJ-8MB90	1
3	0301619	FITT, 6MJ-6MJ-6MB BRANCH TEE	2
4	0301783	FIT-STR THRD O-RING PLUG 10MB	2
5	0303079	ADAPTER, 10MJ-8MB	5
6	0303520	FITTING, ELL 90 DEG	1
7	0306984	FITT, HYD ELB 12MB-12MJ90 W/HO	2
8	0307404	FITTING, HYD 16MJ-10MB	3
9	0310842	HYD TUBE ASSY, RH WINCH - A	1
10	0311712	FITTING ADAPTER STR	2
11	0312420	VALVE - 9 SPOOL SD8 MID-INLET	1
12	0312426	TUBE - HYD 1/2 - BOOM LIFT	2
13	0312427	TUBE - HYD 1 - RETURN	1
14	0312428	TUBE - HYD 1 - RETURN	1
15	0312429	TUBE - HYD 3/4 -PRESSURE FRONT	1
16	0312430	TUBE - HYD 3/4 -PRESSURE REAR	1
17	0312433	TUBE - HYD 5/8 - REAR WINCH	1
18	0312434	TUBE - HYD 1/2 -LH JACK LEG	1
19	0400126	SCREW, 3/8-16X1 HHC GR5	8
20	0400382	NUT, 5/16-18 LOK	4
21	0400392	NUT, 3/8-16 LOK	4
22	0400393	NUT, 3/8-16 JAM	16
23	0400412	NUT, 1/2-20 JAM	16
24	0400463	WASHER, 5/16	18
25	0400464	LKWASHER, 5/16	4
26	0400480	WASHER, 3/8	12
27	0410533	SCREW, M8-1.25X16 HHC 10.9	4

ITEM	PART NUMBER	DESCRIPTION	QTY
28	0717208	HANDLE - SPACER(1 HNDL SPACER)	2
29	0724999	LH CONTROL ROD SHORT	8
30	0725000	RH CONTROL ROD SHORT	8
31	0726340	PLATE - VALVE MTG -VUL 3-WINCH	1
32	0810126	CHANNEL WLDMT-DCV FRMDUAL CTLS	2
33	0810440	CONTROL LUG WELD'T - MED	2
34	0810441	CONTROL LUG WELD'T - LONG	2
35	0810442	CONTROL LUG WELD'T - SHORT	4
36	09007528	COVER ASSEMBLY	1
37	0911816	CONTROL HANDLE ASSY - SHORT	8
38	0911817	CONTROL HANDLE ASSY - LONG	8
39	9041108	5/16 NC X 1 3/4 HHCS PL GR8	4
40	9043371	6 MM LOCKNUT FOR 9043817	8
41	9043713	M8 X 20 SOC SHOULDER BOL	8
42	9048513	SPERICAL ROD END REBPJH-	16
43	930400001	PIN - CONTROL HANDLE PIV	2
44	930400009	BOTTOM PLATE - DCV DUAL	1
45	930760010	TUBE, HYD 1/2 X 17 15/16 RH ST	1
46	930760011	TUBE, HYD 1/2 X 17 13/16 RH ST	1
47	946760003	TUBE, HYD 5/8 X 32 9/16 MAIN B	2
48	946760004	TUBE, HYD 1/2 X 34 7/16 ST.EXT	1
49	946760005	TUBE, HYD 1/2 X 34 7/16 ST.EXT	1
50	946760006	TUBE, HYD 1/2 X 36 1/16 ST.TIL	1
51	946760007	TUBE, HYD 1/2 X 36 1/16 ST.TIL	1
52	946760008	TUBE, HYD 1/2 LH STIFFLEG	1
53	946760010	TUBE, HYD 5/8 X 40 11/16 FR.WI	1
54	946760011	TUBE, HYD 5/8 X 40 11/16 FR.WI	1

0912023, CONTROL STATION ASSEMBLY STD WINCH (cont'd)

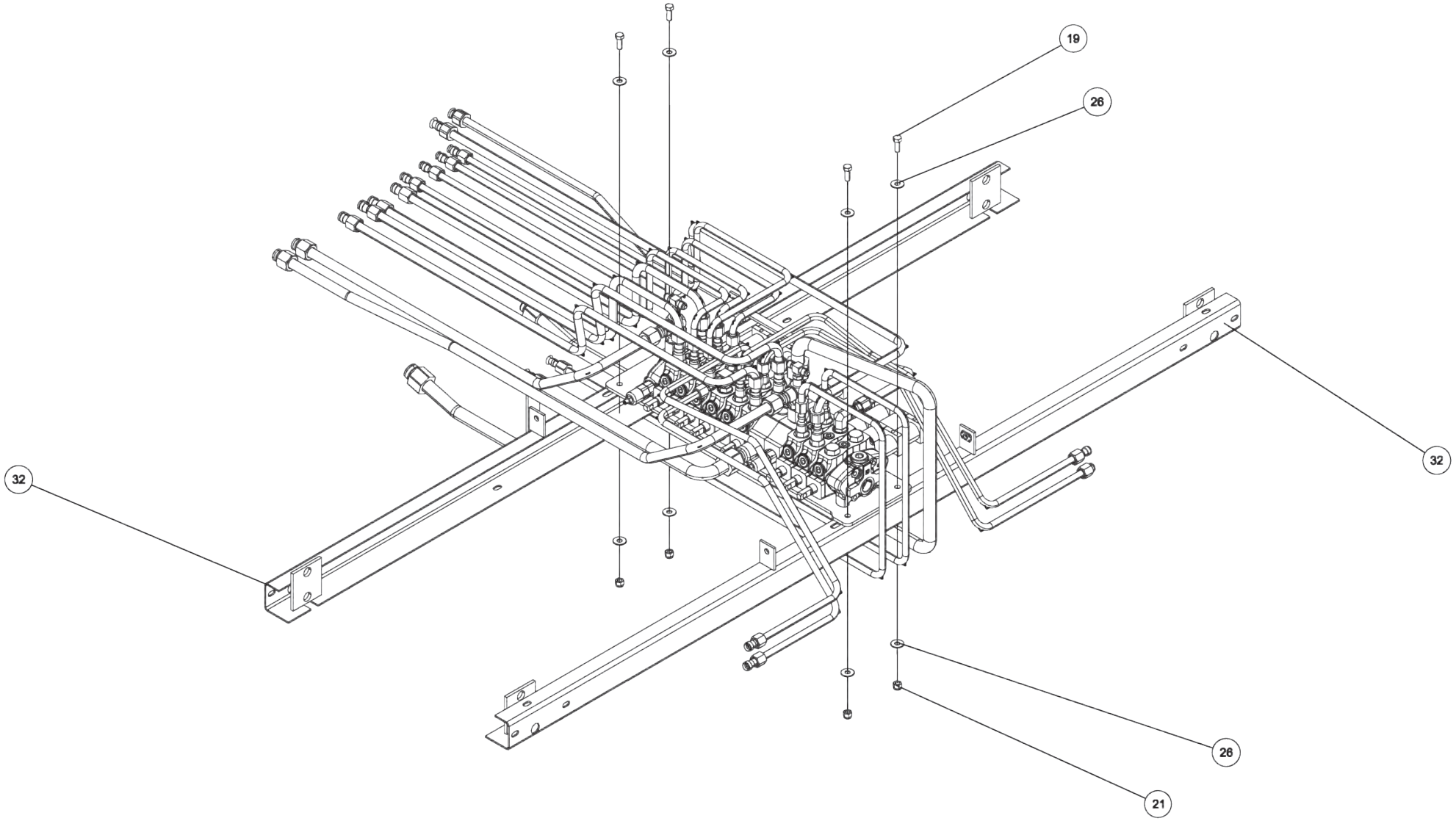

0912023, CONTROL STATION ASSEMBLY STD WINCH (cont'd)

ITEM	PART NUMBER	DESCRIPTION	QTY
--	0912023	CONTROL STATION ASSEMBLY STD WINCH	
1	0300041	CONNECTOR, 8MJ-8MB	9
2	0301388	ELBOW, 8MJ-8MB90	1
3	0301619	FITT, 6MJ-6MJ-6MB BRANCH TEE	2
4	0301783	FIT-STR THRD O-RING PLUG 10MB	2
5	0303079	ADAPTER, 10MJ-8MB	5
6	0303520	FITTING, ELL 90 DEG	1
7	0306984	FITT, HYD ELB 12MB-12MJ90 W/HO	2
8	0307404	FITTING, HYD 16MJ-10MB	3
9	0310842	HYD TUBE ASSY, RH WINCH - A	1
10	0311712	FITTING ADAPTER STR	2
11	0312420	VALVE - 9 SPOOL SD8 MID-INLET	1
12	0312426	TUBE - HYD 1/2 - BOOM LIFT	2
13	0312427	TUBE - HYD 1 - RETURN	1
14	0312428	TUBE - HYD 1 - RETURN	1
15	0312429	TUBE - HYD 3/4 -PRESSURE FRONT	1
16	0312430	TUBE - HYD 3/4 -PRESSURE REAR	1
17	0312433	TUBE - HYD 5/8 - REAR WINCH	1
18	0312434	TUBE - HYD 1/2 -LH JACK LEG	1
19	0400126	SCREW, 3/8-16X1 HHC GR5	8
20	0400382	NUT, 5/16-18 LOK	4
21	0400392	NUT, 3/8-16 LOK	4
22	0400393	NUT, 3/8-16 JAM	16
23	0400412	NUT, 1/2-20 JAM	16
24	0400463	WASHER, 5/16	18
25	0400464	LKWASHER, 5/16	4
26	0400480	WASHER, 3/8	12
27	0410533	SCREW, M8-1.25X16 HHC 10.9	4

ITEM	PART NUMBER	DESCRIPTION	QTY
28	0717208	HANDLE - SPACER(1 HNDL SPACER)	2
29	0724999	LH CONTROL ROD SHORT	8
30	0725000	RH CONTROL ROD SHORT	8
31	0726340	PLATE - VALVE MTG -VUL 3-WINCH	1
32	0810126	CHANNEL WLDMT-DCV FRMDUAL CTLS	2
33	0810440	CONTROL LUG WELD'T - MED	2
34	0810441	CONTROL LUG WELD'T - LONG	2
35	0810442	CONTROL LUG WELD'T - SHORT	4
36	09007528	COVER ASSEMBLY	1
37	0911816	CONTROL HANDLE ASSY - SHORT	8
38	0911817	CONTROL HANDLE ASSY - LONG	8
39	9041108	5/16 NC X 1 3/4 HHCS PL GR8	4
40	9043371	6 MM LOCKNUT FOR 9043817	8
41	9043713	M8 X 20 SOC SHOULDER BOL	8
42	9048513	SPERICAL ROD END REBPJH-	16
43	930400001	PIN - CONTROL HANDLE PIV	2
44	930400009	BOTTOM PLATE - DCV DUAL	1
45	930760010	TUBE, HYD 1/2 X 17 15/16 RH ST	1
46	930760011	TUBE, HYD 1/2 X 17 13/16 RH ST	1
47	946760003	TUBE, HYD 5/8 X 32 9/16 MAIN B	2
48	946760004	TUBE, HYD 1/2 X 34 7/16 ST.EXT	1
49	946760005	TUBE, HYD 1/2 X 34 7/16 ST.EXT	1
50	946760006	TUBE, HYD 1/2 X 36 1/16 ST.TIL	1
51	946760007	TUBE, HYD 1/2 X 36 1/16 ST.TIL	1
52	946760008	TUBE, HYD 1/2 LH STIFFLEG	1
53	946760010	TUBE, HYD 5/8 X 40 11/16 FR.WI	1
54	946760011	TUBE, HYD 5/8 X 40 11/16 FR.WI	1

0912023, CONTROL STATION ASSEMBLY STD WINCH (cont'd)

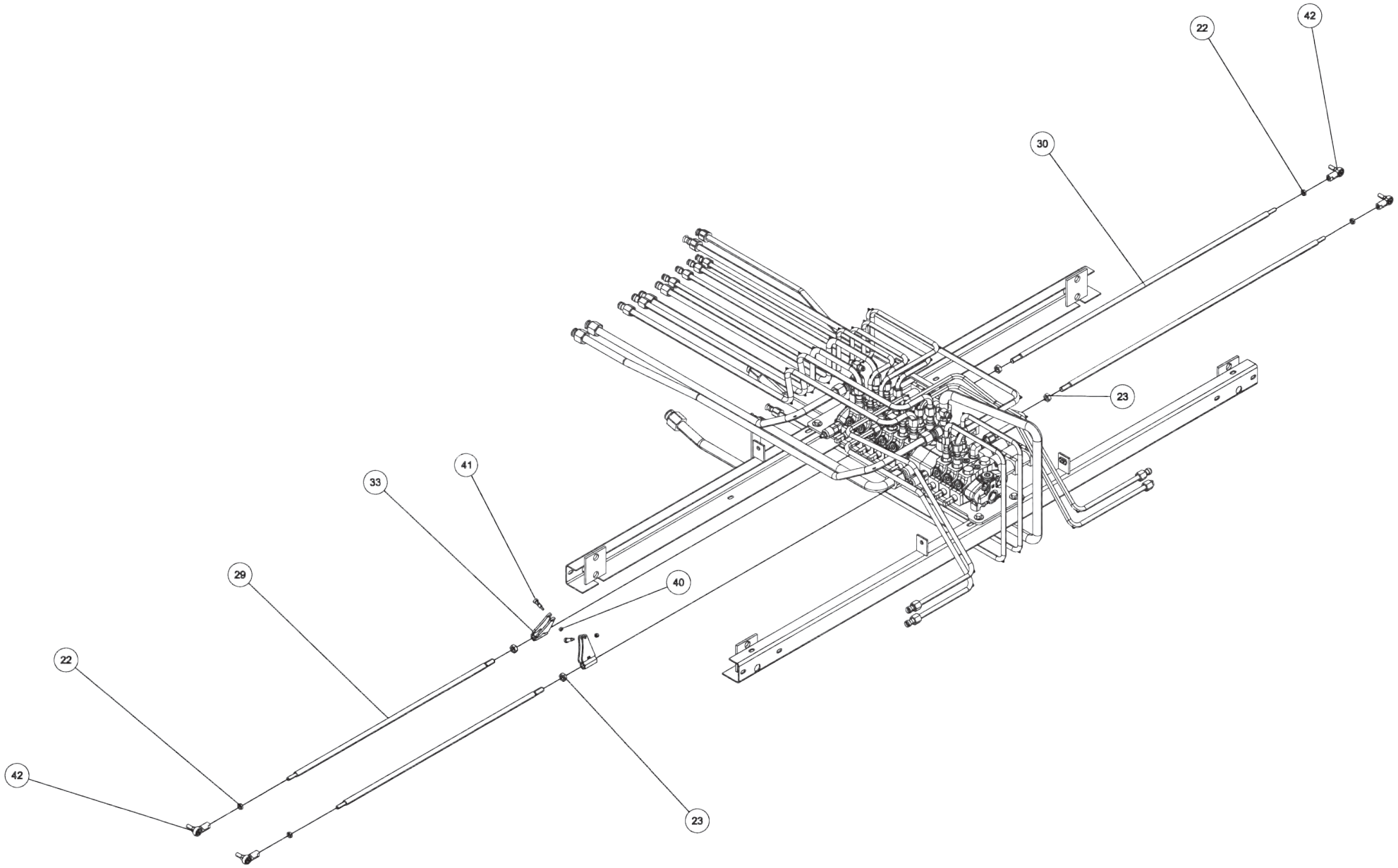

0912023, CONTROL STATION ASSEMBLY STD WINCH (cont'd)

ITEM	PART NUMBER	DESCRIPTION	QTY
--	0912023	CONTROL STATION ASSEMBLY STD WINCH	
1	0300041	CONNECTOR, 8MJ-8MB	9
2	0301388	ELBOW, 8MJ-8MB90	1
3	0301619	FITT, 6MJ-6MJ-6MB BRANCH TEE	2
4	0301783	FIT-STR THRD O-RING PLUG 10MB	2
5	0303079	ADAPTER, 10MJ-8MB	5
6	0303520	FITTING, ELL 90 DEG	1
7	0306984	FITT, HYD ELB 12MB-12MJ90 W/HO	2
8	0307404	FITTING, HYD 16MJ-10MB	3
9	0310842	HYD TUBE ASSY, RH WINCH - A	1
10	0311712	FITTING ADAPTER STR	2
11	0312420	VALVE - 9 SPOOL SD8 MID-INLET	1
12	0312426	TUBE - HYD 1/2 - BOOM LIFT	2
13	0312427	TUBE - HYD 1 - RETURN	1
14	0312428	TUBE - HYD 1 - RETURN	1
15	0312429	TUBE - HYD 3/4 -PRESSURE FRONT	1
16	0312430	TUBE - HYD 3/4 -PRESSURE REAR	1
17	0312433	TUBE - HYD 5/8 - REAR WINCH	1
18	0312434	TUBE - HYD 1/2 -LH JACK LEG	1
19	0400126	SCREW, 3/8-16X1 HHC GR5	8
20	0400382	NUT, 5/16-18 LOK	4
21	0400392	NUT, 3/8-16 LOK	4
22	0400393	NUT, 3/8-16 JAM	16
23	0400412	NUT, 1/2-20 JAM	16
24	0400463	WASHER, 5/16	18
25	0400464	LKWASHER, 5/16	4
26	0400480	WASHER, 3/8	12
27	0410533	SCREW, M8-1.25X16 HHC 10.9	4

ITEM	PART NUMBER	DESCRIPTION	QTY
28	0717208	HANDLE - SPACER(1 HNDL SPACER)	2
29	0724999	LH CONTROL ROD SHORT	8
30	0725000	RH CONTROL ROD SHORT	8
31	0726340	PLATE - VALVE MTG -VUL 3-WINCH	1
32	0810126	CHANNEL WLDMT-DCV FRMDUAL CTLS	2
33	0810440	CONTROL LUG WELD'T - MED	2
34	0810441	CONTROL LUG WELD'T - LONG	2
35	0810442	CONTROL LUG WELD'T - SHORT	4
36	09007528	COVER ASSEMBLY	1
37	0911816	CONTROL HANDLE ASSY - SHORT	8
38	0911817	CONTROL HANDLE ASSY - LONG	8
39	9041108	5/16 NC X 1 3/4 HHCS PL GR8	4
40	9043371	6 MM LOCKNUT FOR 9043817	8
41	9043713	M8 X 20 SOC SHOULDER BOL	8
42	9048513	SPERICAL ROD END REBPJH-	16
43	930400001	PIN - CONTROL HANDLE PIV	2
44	930400009	BOTTOM PLATE - DCV DUAL	1
45	930760010	TUBE, HYD 1/2 X 17 15/16 RH ST	1
46	930760011	TUBE, HYD 1/2 X 17 13/16 RH ST	1
47	946760003	TUBE, HYD 5/8 X 32 9/16 MAIN B	2
48	946760004	TUBE, HYD 1/2 X 34 7/16 ST.EXT	1
49	946760005	TUBE, HYD 1/2 X 34 7/16 ST.EXT	1
50	946760006	TUBE, HYD 1/2 X 36 1/16 ST.TIL	1
51	946760007	TUBE, HYD 1/2 X 36 1/16 ST.TIL	1
52	946760008	TUBE, HYD 1/2 LH STIFFLEG	1
53	946760010	TUBE, HYD 5/8 X 40 11/16 FR.WI	1
54	946760011	TUBE, HYD 5/8 X 40 11/16 FR.WI	1

0912023, CONTROL STATION ASSEMBLY STD WINCH (cont'd)

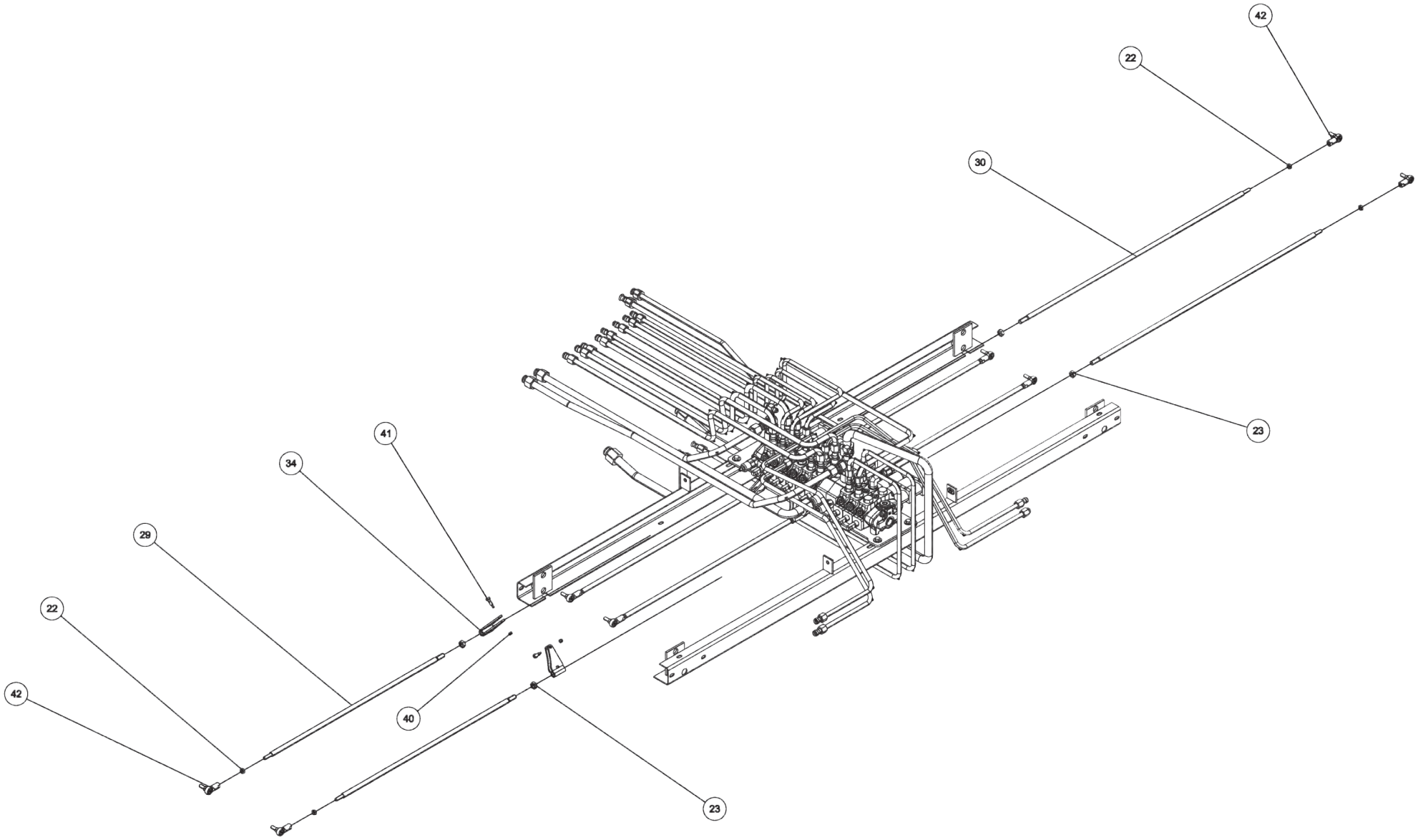

0912023, CONTROL STATION ASSEMBLY STD WINCH (cont'd)

ITEM	PART NUMBER	DESCRIPTION	QTY
--	0912023	CONTROL STATION ASSEMBLY STD WINCH	
1	0300041	CONNECTOR, 8MJ-8MB	9
2	0301388	ELBOW, 8MJ-8MB90	1
3	0301619	FITT, 6MJ-6MJ-6MB BRANCH TEE	2
4	0301783	FIT-STR THRD O-RING PLUG 10MB	2
5	0303079	ADAPTER, 10MJ-8MB	5
6	0303520	FITTING, ELL 90 DEG	1
7	0306984	FITT, HYD ELB 12MB-12MJ90 W/HO	2
8	0307404	FITTING, HYD 16MJ-10MB	3
9	0310842	HYD TUBE ASSY, RH WINCH - A	1
10	0311712	FITTING ADAPTER STR	2
11	0312420	VALVE - 9 SPOOL SD8 MID-INLET	1
12	0312426	TUBE - HYD 1/2 - BOOM LIFT	2
13	0312427	TUBE - HYD 1 - RETURN	1
14	0312428	TUBE - HYD 1 - RETURN	1
15	0312429	TUBE - HYD 3/4 -PRESSURE FRONT	1
16	0312430	TUBE - HYD 3/4 -PRESSURE REAR	1
17	0312433	TUBE - HYD 5/8 - REAR WINCH	1
18	0312434	TUBE - HYD 1/2 -LH JACK LEG	1
19	0400126	SCREW, 3/8-16X1 HHC GR5	8
20	0400382	NUT, 5/16-18 LOK	4
21	0400392	NUT, 3/8-16 LOK	4
22	0400393	NUT, 3/8-16 JAM	16
23	0400412	NUT, 1/2-20 JAM	16
24	0400463	WASHER, 5/16	18
25	0400464	LKWASHER, 5/16	4
26	0400480	WASHER, 3/8	12
27	0410533	SCREW, M8-1.25X16 HHC 10.9	4

ITEM	PART NUMBER	DESCRIPTION	QTY
28	0717208	HANDLE - SPACER(1 HNDL SPACER)	2
29	0724999	LH CONTROL ROD SHORT	8
30	0725000	RH CONTROL ROD SHORT	8
31	0726340	PLATE - VALVE MTG -VUL 3-WINCH	1
32	0810126	CHANNEL WLDMT-DCV FRMDUAL CTLS	2
33	0810440	CONTROL LUG WELD'T - MED	2
34	0810441	CONTROL LUG WELD'T - LONG	2
35	0810442	CONTROL LUG WELD'T - SHORT	4
36	09007528	COVER ASSEMBLY	1
37	0911816	CONTROL HANDLE ASSY - SHORT	8
38	0911817	CONTROL HANDLE ASSY - LONG	8
39	9041108	5/16 NC X 1 3/4 HHCS PL GR8	4
40	9043371	6 MM LOCKNUT FOR 9043817	8
41	9043713	M8 X 20 SOC SHOULDER BOL	8
42	9048513	SPERICAL ROD END REBPJH-	16
43	930400001	PIN - CONTROL HANDLE PIV	2
44	930400009	BOTTOM PLATE - DCV DUAL	1
45	930760010	TUBE, HYD 1/2 X 17 15/16 RH ST	1
46	930760011	TUBE, HYD 1/2 X 17 13/16 RH ST	1
47	946760003	TUBE, HYD 5/8 X 32 9/16 MAIN B	2
48	946760004	TUBE, HYD 1/2 X 34 7/16 ST.EXT	1
49	946760005	TUBE, HYD 1/2 X 34 7/16 ST.EXT	1
50	946760006	TUBE, HYD 1/2 X 36 1/16 ST.TIL	1
51	946760007	TUBE, HYD 1/2 X 36 1/16 ST.TIL	1
52	946760008	TUBE, HYD 1/2 LH STIFFLEG	1
53	946760010	TUBE, HYD 5/8 X 40 11/16 FR.WI	1
54	946760011	TUBE, HYD 5/8 X 40 11/16 FR.WI	1

0912023, CONTROL STATION ASSEMBLY STD WINCH (cont'd)

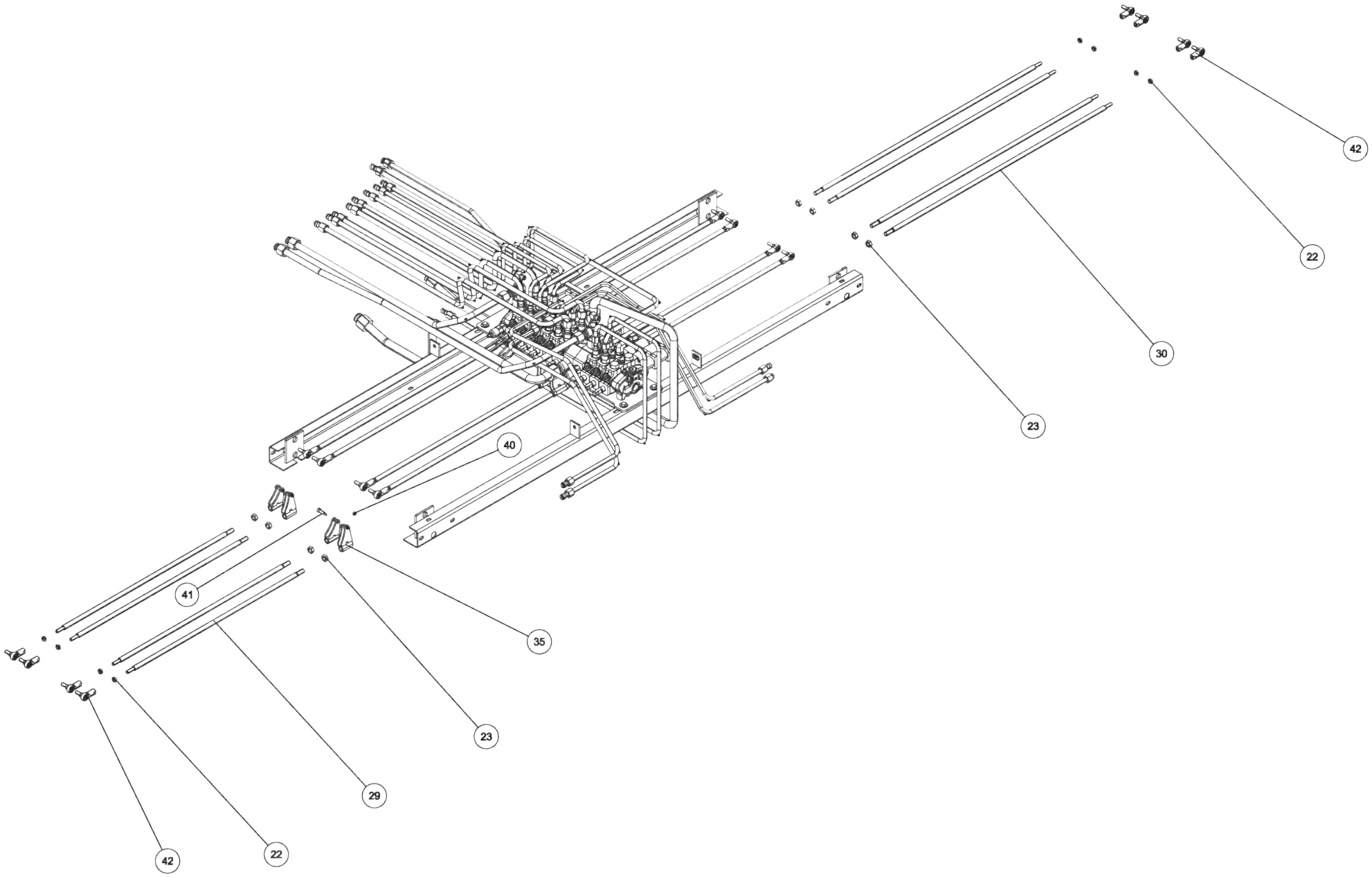

0912023, CONTROL STATION ASSEMBLY STD WINCH (cont'd)

ITEM	PART NUMBER	DESCRIPTION	QTY
--	0912023	CONTROL STATION ASSEMBLY STD WINCH	
1	0300041	CONNECTOR, 8MJ-8MB	9
2	0301388	ELBOW, 8MJ-8MB90	1
3	0301619	FITT, 6MJ-6MJ-6MB BRANCH TEE	2
4	0301783	FIT-STR THRD O-RING PLUG 10MB	2
5	0303079	ADAPTER, 10MJ-8MB	5
6	0303520	FITTING, ELL 90 DEG	1
7	0306984	FITT, HYD ELB 12MB-12MJ90 W/HO	2
8	0307404	FITTING, HYD 16MJ-10MB	3
9	0310842	HYD TUBE ASSY, RH WINCH - A	1
10	0311712	FITTING ADAPTER STR	2
11	0312420	VALVE - 9 SPOOL SD8 MID-INLET	1
12	0312426	TUBE - HYD 1/2 - BOOM LIFT	2
13	0312427	TUBE - HYD 1 - RETURN	1
14	0312428	TUBE - HYD 1 - RETURN	1
15	0312429	TUBE - HYD 3/4 -PRESSURE FRONT	1
16	0312430	TUBE - HYD 3/4 -PRESSURE REAR	1
17	0312433	TUBE - HYD 5/8 - REAR WINCH	1
18	0312434	TUBE - HYD 1/2 -LH JACK LEG	1
19	0400126	SCREW, 3/8-16X1 HHC GR5	8
20	0400382	NUT, 5/16-18 LOK	4
21	0400392	NUT, 3/8-16 LOK	4
22	0400393	NUT, 3/8-16 JAM	16
23	0400412	NUT, 1/2-20 JAM	16
24	0400463	WASHER, 5/16	18
25	0400464	LKWASHER, 5/16	4
26	0400480	WASHER, 3/8	12
27	0410533	SCREW, M8-1.25X16 HHC 10.9	4

ITEM	PART NUMBER	DESCRIPTION	QTY
28	0717208	HANDLE - SPACER(1 HNDL SPACER)	2
29	0724999	LH CONTROL ROD SHORT	8
30	0725000	RH CONTROL ROD SHORT	8
31	0726340	PLATE - VALVE MTG -VUL 3-WINCH	1
32	0810126	CHANNEL WLDMT-DCV FRMDUAL CTLS	2
33	0810440	CONTROL LUG WELD'T - MED	2
34	0810441	CONTROL LUG WELD'T - LONG	2
35	0810442	CONTROL LUG WELD'T - SHORT	4
36	09007528	COVER ASSEMBLY	1
37	0911816	CONTROL HANDLE ASSY - SHORT	8
38	0911817	CONTROL HANDLE ASSY - LONG	8
39	9041108	5/16 NC X 1 3/4 HHCS PL GR8	4
40	9043371	6 MM LOCKNUT FOR 9043817	8
41	9043713	M8 X 20 SOC SHOULDER BOL	8
42	9048513	SPERICAL ROD END REBPJH-	16
43	930400001	PIN - CONTROL HANDLE PIV	2
44	930400009	BOTTOM PLATE - DCV DUAL	1
45	930760010	TUBE, HYD 1/2 X 17 15/16 RH ST	1
46	930760011	TUBE, HYD 1/2 X 17 13/16 RH ST	1
47	946760003	TUBE, HYD 5/8 X 32 9/16 MAIN B	2
48	946760004	TUBE, HYD 1/2 X 34 7/16 ST.EXT	1
49	946760005	TUBE, HYD 1/2 X 34 7/16 ST.EXT	1
50	946760006	TUBE, HYD 1/2 X 36 1/16 ST.TIL	1
51	946760007	TUBE, HYD 1/2 X 36 1/16 ST.TIL	1
52	946760008	TUBE, HYD 1/2 LH STIFFLEG	1
53	946760010	TUBE, HYD 5/8 X 40 11/16 FR.WI	1
54	946760011	TUBE, HYD 5/8 X 40 11/16 FR.WI	1

0912023, CONTROL STATION ASSEMBLY STD WINCH (cont'd)

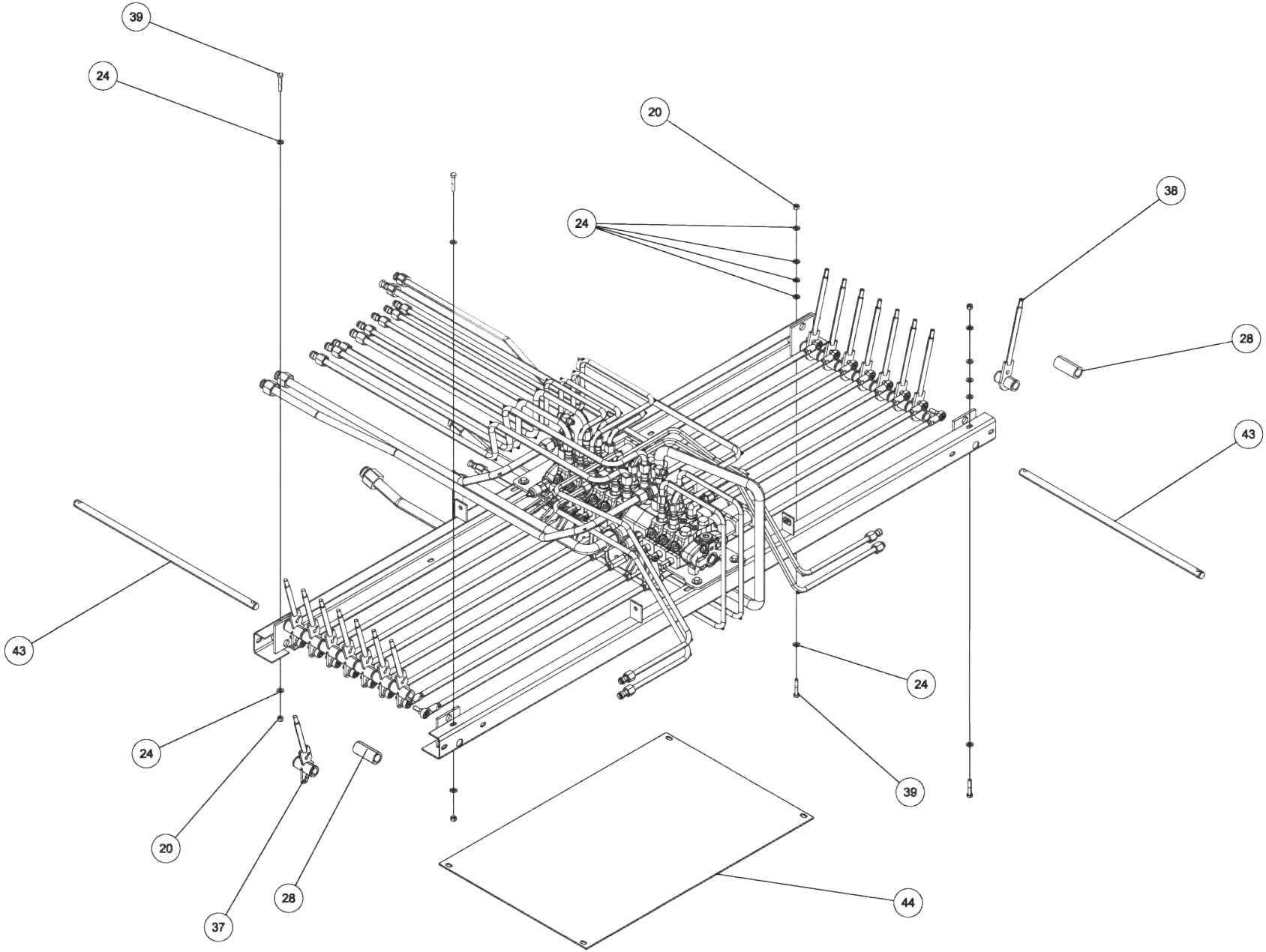

0912023, CONTROL STATION ASSEMBLY STD WINCH (cont'd)

ITEM	PART NUMBER	DESCRIPTION	QTY
--	0912023	CONTROL STATION ASSEMBLY STD WINCH	
1	0300041	CONNECTOR, 8MJ-8MB	9
2	0301388	ELBOW, 8MJ-8MB90	1
3	0301619	FITT, 6MJ-6MJ-6MB BRANCH TEE	2
4	0301783	FIT-STR THRD O-RING PLUG 10MB	2
5	0303079	ADAPTER, 10MJ-8MB	5
6	0303520	FITTING, ELL 90 DEG	1
7	0306984	FITT, HYD ELB 12MB-12MJ90 W/HO	2
8	0307404	FITTING, HYD 16MJ-10MB	3
9	0310842	HYD TUBE ASSY, RH WINCH - A	1
10	0311712	FITTING ADAPTER STR	2
11	0312420	VALVE - 9 SPOOL SD8 MID-INLET	1
12	0312426	TUBE - HYD 1/2 - BOOM LIFT	2
13	0312427	TUBE - HYD 1 - RETURN	1
14	0312428	TUBE - HYD 1 - RETURN	1
15	0312429	TUBE - HYD 3/4 -PRESSURE FRONT	1
16	0312430	TUBE - HYD 3/4 -PRESSURE REAR	1
17	0312433	TUBE - HYD 5/8 - REAR WINCH	1
18	0312434	TUBE - HYD 1/2 -LH JACK LEG	1
19	0400126	SCREW, 3/8-16X1 HHC GR5	8
20	0400382	NUT, 5/16-18 LOK	4
21	0400392	NUT, 3/8-16 LOK	4
22	0400393	NUT, 3/8-16 JAM	16
23	0400412	NUT, 1/2-20 JAM	16
24	0400463	WASHER, 5/16	18
25	0400464	LKWASHER, 5/16	4
26	0400480	WASHER, 3/8	12
27	0410533	SCREW, M8-1.25X16 HHC 10.9	4

ITEM	PART NUMBER	DESCRIPTION	QTY
28	0717208	HANDLE - SPACER(1 HNDL SPACER)	2
29	0724999	LH CONTROL ROD SHORT	8
30	0725000	RH CONTROL ROD SHORT	8
31	0726340	PLATE - VALVE MTG -VUL 3-WINCH	1
32	0810126	CHANNEL WLDMT-DCV FRMDUAL CTLS	2
33	0810440	CONTROL LUG WELD'T - MED	2
34	0810441	CONTROL LUG WELD'T - LONG	2
35	0810442	CONTROL LUG WELD'T - SHORT	4
36	09007528	COVER ASSEMBLY	1
37	0911816	CONTROL HANDLE ASSY - SHORT	8
38	0911817	CONTROL HANDLE ASSY - LONG	8
39	9041108	5/16 NC X 1 3/4 HHCS PL GR8	4
40	9043371	6 MM LOCKNUT FOR 9043817	8
41	9043713	M8 X 20 SOC SHOULDER BOL	8
42	9048513	SPERICAL ROD END REBPJH-	16
43	930400001	PIN - CONTROL HANDLE PIV	2
44	930400009	BOTTOM PLATE - DCV DUAL	1
45	930760010	TUBE, HYD 1/2 X 17 15/16 RH ST	1
46	930760011	TUBE, HYD 1/2 X 17 13/16 RH ST	1
47	946760003	TUBE, HYD 5/8 X 32 9/16 MAIN B	2
48	946760004	TUBE, HYD 1/2 X 34 7/16 ST.EXT	1
49	946760005	TUBE, HYD 1/2 X 34 7/16 ST.EXT	1
50	946760006	TUBE, HYD 1/2 X 36 1/16 ST.TIL	1
51	946760007	TUBE, HYD 1/2 X 36 1/16 ST.TIL	1
52	946760008	TUBE, HYD 1/2 LH STIFFLEG	1
53	946760010	TUBE, HYD 5/8 X 40 11/16 FR.WI	1
54	946760011	TUBE, HYD 5/8 X 40 11/16 FR.WI	1

0912023, CONTROL STATION ASSEMBLY STD WINCH (cont'd)

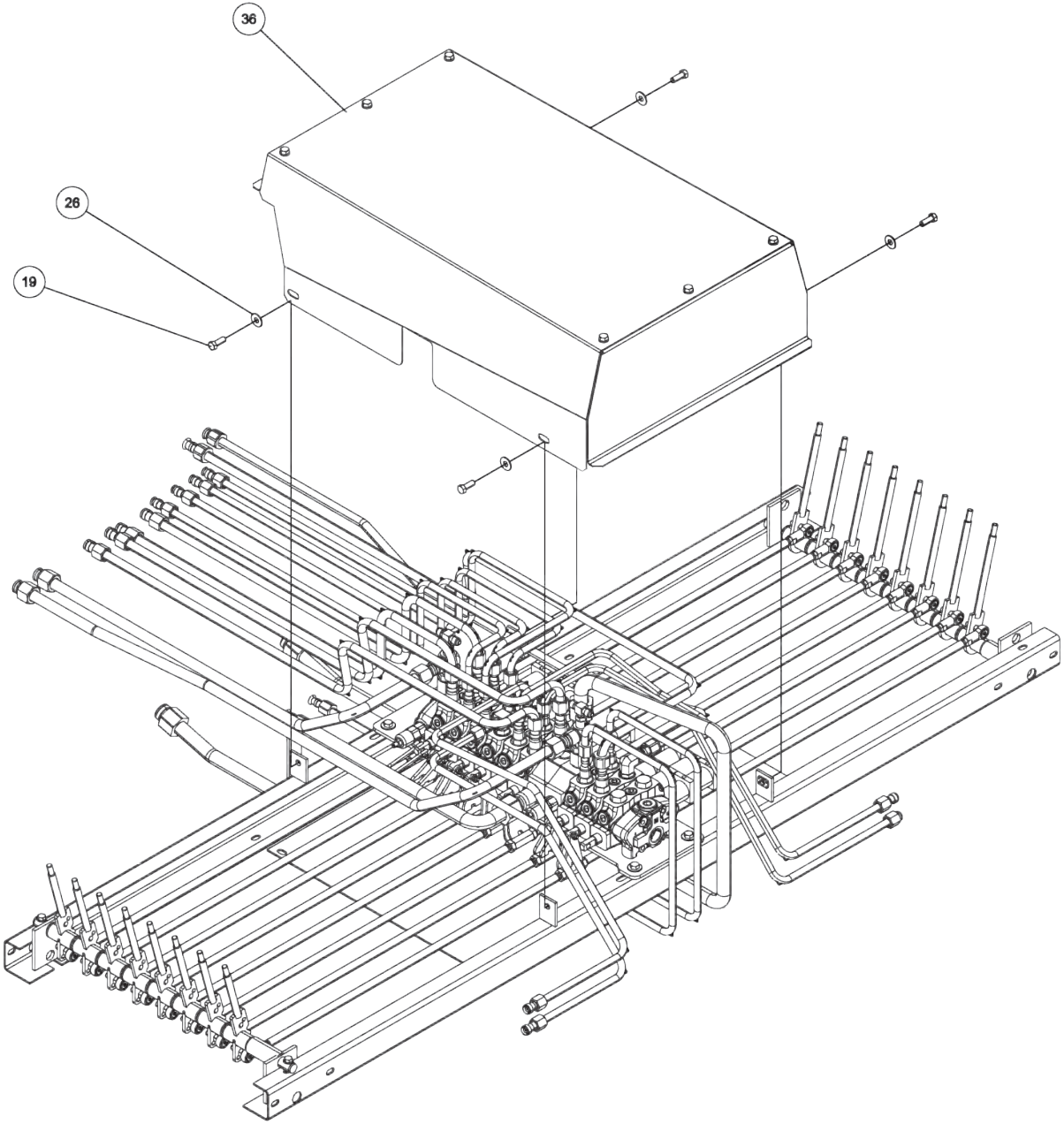

0912023, CONTROL STATION ASSEMBLY STD WINCH (cont'd)

ITEM	PART NUMBER	DESCRIPTION	QTY
--	0912023	CONTROL STATION ASSEMBLY STD WINCH	
1	0300041	CONNECTOR, 8MJ-8MB	9
2	0301388	ELBOW, 8MJ-8MB90	1
3	0301619	FITT, 6MJ-6MJ-6MB BRANCH TEE	2
4	0301783	FIT-STR THRD O-RING PLUG 10MB	2
5	0303079	ADAPTER, 10MJ-8MB	5
6	0303520	FITTING, ELL 90 DEG	1
7	0306984	FITT, HYD ELB 12MB-12MJ90 W/HO	2
8	0307404	FITTING, HYD 16MJ-10MB	3
9	0310842	HYD TUBE ASSY, RH WINCH - A	1
10	0311712	FITTING ADAPTER STR	2
11	0312420	VALVE - 9 SPOOL SD8 MID-INLET	1
12	0312426	TUBE - HYD 1/2 - BOOM LIFT	2
13	0312427	TUBE - HYD 1 - RETURN	1
14	0312428	TUBE - HYD 1 - RETURN	1
15	0312429	TUBE - HYD 3/4 -PRESSURE FRONT	1
16	0312430	TUBE - HYD 3/4 -PRESSURE REAR	1
17	0312433	TUBE - HYD 5/8 - REAR WINCH	1
18	0312434	TUBE - HYD 1/2 -LH JACK LEG	1
19	0400126	SCREW, 3/8-16X1 HHC GR5	8
20	0400382	NUT, 5/16-18 LOK	4
21	0400392	NUT, 3/8-16 LOK	4
22	0400393	NUT, 3/8-16 JAM	16
23	0400412	NUT, 1/2-20 JAM	16
24	0400463	WASHER, 5/16	18
25	0400464	LKWASHER, 5/16	4
26	0400480	WASHER, 3/8	12
27	0410533	SCREW, M8-1.25X16 HHC 10.9	4

ITEM	PART NUMBER	DESCRIPTION	QTY
28	0717208	HANDLE - SPACER(1 HNDL SPACER)	2
29	0724999	LH CONTROL ROD SHORT	8
30	0725000	RH CONTROL ROD SHORT	8
31	0726340	PLATE - VALVE MTG -VUL 3-WINCH	1
32	0810126	CHANNEL WLDMT-DCV FRMDUAL CTLS	2
33	0810440	CONTROL LUG WELD'T - MED	2
34	0810441	CONTROL LUG WELD'T - LONG	2
35	0810442	CONTROL LUG WELD'T - SHORT	4
36	09007528	COVER ASSEMBLY	1
37	0911816	CONTROL HANDLE ASSY - SHORT	8
38	0911817	CONTROL HANDLE ASSY - LONG	8
39	9041108	5/16 NC X 1 3/4 HHCS PL GR8	4
40	9043371	6 MM LOCKNUT FOR 9043817	8
41	9043713	M8 X 20 SOC SHOULDER BOL	8
42	9048513	SPERICAL ROD END REBPJH-	16
43	930400001	PIN - CONTROL HANDLE PIV	2
44	930400009	BOTTOM PLATE - DCV DUAL	1
45	930760010	TUBE, HYD 1/2 X 17 15/16 RH ST	1
46	930760011	TUBE, HYD 1/2 X 17 13/16 RH ST	1
47	946760003	TUBE, HYD 5/8 X 32 9/16 MAIN B	2
48	946760004	TUBE, HYD 1/2 X 34 7/16 ST.EXT	1
49	946760005	TUBE, HYD 1/2 X 34 7/16 ST.EXT	1
50	946760006	TUBE, HYD 1/2 X 36 1/16 ST.TIL	1
51	946760007	TUBE, HYD 1/2 X 36 1/16 ST.TIL	1
52	946760008	TUBE, HYD 1/2 LH STIFFLEG	1
53	946760010	TUBE, HYD 5/8 X 40 11/16 FR.WI	1
54	946760011	TUBE, HYD 5/8 X 40 11/16 FR.WI	1

09007528, COVER ASSEMBLY

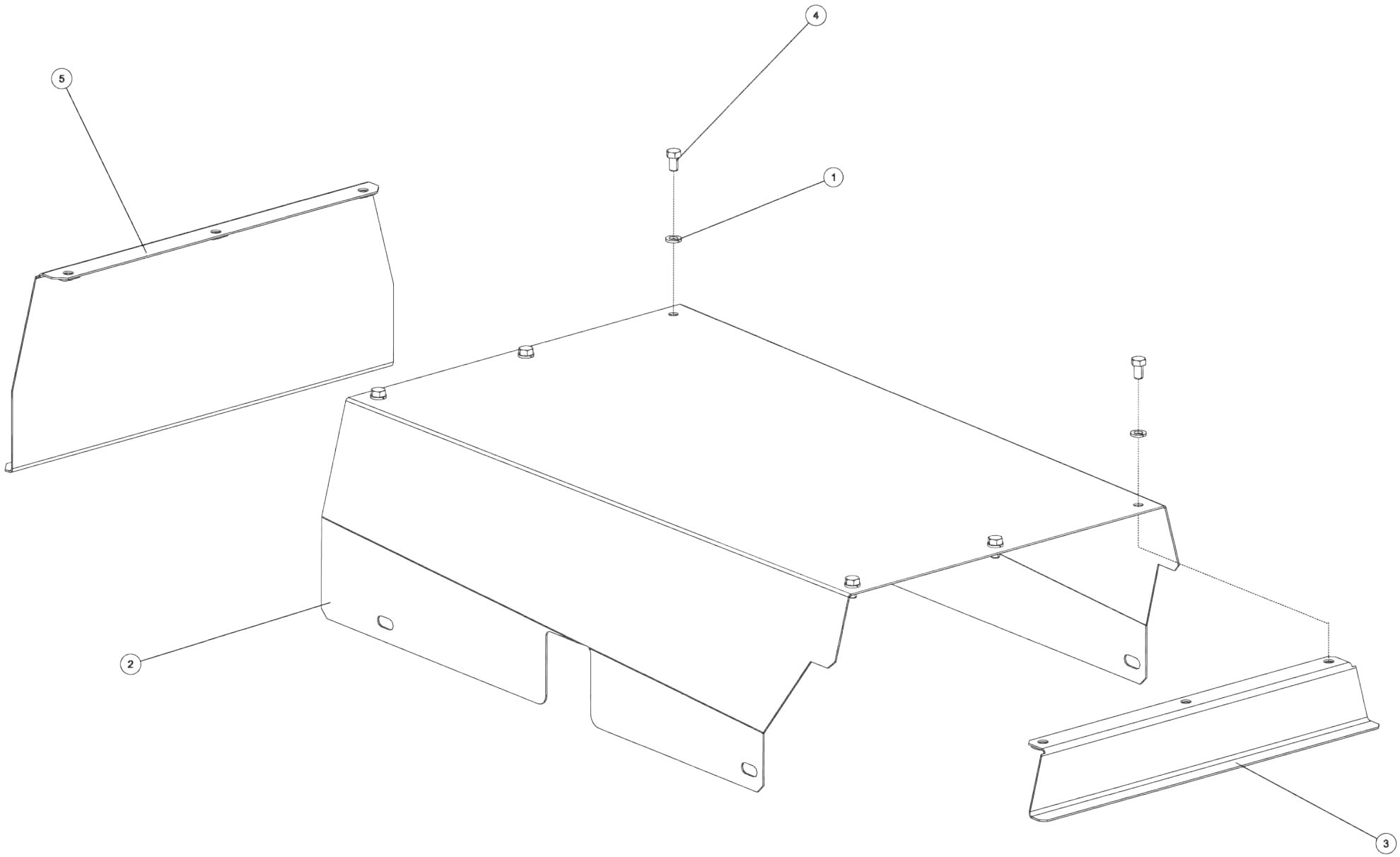

09007528, COVER ASSEMBLY (cont'd)

ITEM	PART NUMBER	DESCRIPTION	QTY
--	09007528	COVER ASSEMBLY	
1	0400482	LKWASHER, 3/8	6
2	07009624	COVER, TOP PANEL	1
3	08007028	WELDMENT, FRONT PANEL	1
4	9041202	3/8-16 X 5/8 HHCS PL GR8	6
5	946402600	REAR PANEL WELD'T	1

948570000, 5X5 LIFT BAR ASSEMBLY 948 XHD

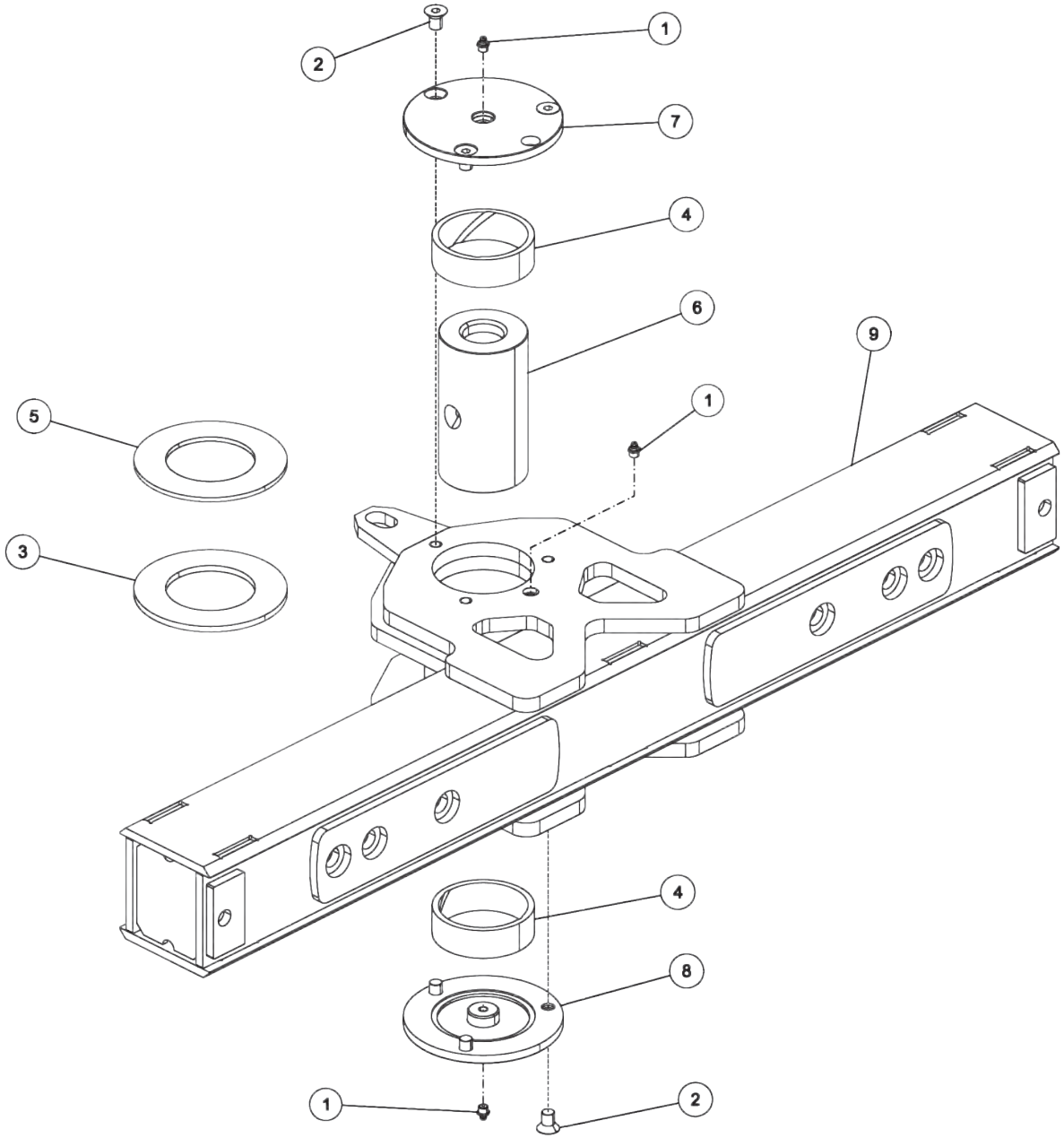

948570000, 5X5 LIFT BAR ASSEMBLY 948 XHD (cont'd)

ITEM	PART NUMBER	DESCRIPTION	QTY
--	948570000	5X5 LIFT BAR ASSEMBLY 948 XHD	
1	0301895	GREASE FITTING, 1/8 STR PTF	3
2	0400344	SCREW, 1/2-13X3/4 FHS GR8	6
3	915150005	THRUST WASHER - V-40,	1
4	945510006	BEARING - ALUM. BRONZE	2
5	945510007	THRUST WASHER - V-60,	1
6	946350005	PIVOT PIN - 5 CROSSBAR	1
7	946571000	TOP COVER PLATE WELD'T	1
8	946571100	BOTTOM COVER PLATE WELD.	1
9	948570500	CROSSBAR - 948 HD	1

NOTES

NOTES

Miller Industries Towing Equipment Inc.
8503 Hilltop Drive • Ooltewah, Tennessee 37363
(423) 238-4171 • www.millerind.com