OWNER'S MANUAL

600R KNEE BOOM

PARTS

NOTE: MANUAL including SPECIFICATIONS subject to change without notice.
All ratings specified are based on structural factors only, not vehicle capacities or capabilities.

Miller Industries Towing Equipment Inc.
8503 Hilltop Drive
Ooltewah, Tennessee 37363
Phone (423) 238-4171 • FAX (423) 238-5371

FORM NO. 05003743
March 2022
PRICE $25.00

LIMITED WARRANTY

MILLER INDUSTRIES TOWING EQUIPMENT INC., hereinafter referred to as MILLER, warrants to the original purchaser that each new MILLER wrecker or other MILLER products will be free from defects in material and workmanship for a period of twelve (12) months from date placed in service, but in no event shall such warranty period exceed twenty-four (24) months from date of manufacture by MILLER. The purchaser must promptly notify MILLER in writing of any failure in material or workmanship. In no event shall MILLER accept such notification later than twenty-four (24) months from date of delivery or twelve (12) months from date placed in service, whichever is earlier.

MILLER's obligation under this warranty, statutory or otherwise, is limited to the repair or replacement at the MILLER factory, or at a point designated by MILLER, of such part or parts as shall appear upon inspection by MILLER to be defective in material or workmanship. New or remanufactured parts will be used for any replacement at MILLER's option. This warranty is not transferable. This warranty does not obligate MILLER to bear the cost of labor or transportation charges in connection with the repair or replacement of any parts found to be defective, nor shall it apply to a product upon which repairs or alterations have been made unless authorized by MILLER.

EXCEPT AS EXPRESSLY SET FORTH IN THIS WARRANTY, MILLER MAKES NO OTHER WARRANTY, EXPRESS OR IMPLIED, AND HEREBY DISCLAIMS ALL OTHER WARRANTIES INCLUDING, BUT NOT LIMITED TO, THE IMPLIED WARRANTIES OF MERCHANTABILITY AND FITNESS FOR A PARTICULAR PURPOSE. MILLER shall in no event be liable for claimed downtime, claimed loss of profits or goodwill, or any other special, incidental, indirect, or consequential damages concerning or relating to any product or parts, whether based on negligence, strict liability, breach of contract, breach of warranty, misrepresentation or any other legal theory, regardless of whether the loss resulted from any general or particular requirement which MILLER knew or had reason to know about at the time of sale.

MILLER MAKES NO WARRANTY, EXPRESS OR IMPLIED, AS TO THE FINISHED PRODUCTS MANUFACTURED OR SUPPLIED BY ANOTHER MANUFACTURER AND SUPPLIED BY MILLER TO PURCHASER, including, but not limited to, any vehicle to which a MILLER product may be affixed or any accessories or wire rope, and MILLER EXPRESSLY DISCLAIMS ANY IMPLIED WARRANTIES OF MERCHANTABILITY OR FITNESS FOR A PARTICULAR PURPOSE AS TO SUCH EQUIPMENT OR PRODUCTS. This language shall in no way affect or diminish the rights of the purchaser to rely on such warranties as are extended by such manufacturers or suppliers. MILLER shall, to the extent permitted under applicable law, pass on to the purchaser such manufacturer's or seller's warranty.

MILLER, whose policy is one of continuous improvement, reserves the right to improve its products through changes in design or materials as it may deem desirable without being obligated to incorporate such changes in products previously sold. This warranty is not intended to cover or include the following items, which are set forth by way of example and not limitation:

A. Normal deterioration of trim, paint, lettering, and appearance items due to wear or exposure to weather, road conditions, road treatments, etc.
B. Any damage or defect due to accident, misuse, abuse, improper or unauthorized repairs, failure to provide reasonable and necessary maintenance, or uses for which the equipment was not designed or intended.
C. Alterations or modifications that affect performance, operation or reliability.
D. Normal maintenance parts including, but not limited to, wear pads, bushings, wire rope, mud flaps, fenderettes, light bulbs, hydraulic oil, filters, and tow sling belts.

IT IS EXPRESSLY UNDERSTOOD THAT MILLER MAKES NO IMPLIED WARRANTY THAT MILLER PRODUCTS SHALL BE FIT FOR THE PURPOSE OF LIFTING OR MOVING PEOPLE OR FOR ANY OTHER IMPROPER USE.

Miller Industries Towing Equipment Inc.
8503 Hilltop Drive
Ooltewah, Tennessee 37363
Telephone (423) 238-4171

SERIAL NUMBER

OWNER, USER AND OPERATOR:

We appreciate your choice of our towing and recovery unit for your application. Our number one priority is user safety which is best achieved by our joint efforts. We feel that you can make a major contribution to safety if you, as the equipment owner and operator:

1. **Comply with all Federal, State, and Local Regulations.**
2. **Read, Understand, and Follow the Instructions in this Manual.**
3. **Use Good, Safe Work Practices in a Common Sense Way.**
4. **Only have Authorized and Trained Personnel performing maintenance on the Towing and Recovery Unit.**

Use of other than Factory or Factory Authorized parts will render the Warranty as void.

© 2022 MILLER INDUSTRIES TOWING EQUIPMENT INC. All rights reserved. Reproduction or use, without express permission, of editorial or pictorial content, in any manner, is prohibited.

TABLE OF CONTENTS

It is assumed by the manufacturer that the Owner/Operator has a thorough knowledge of the accepted and lawful retrieval and towing methods as dictated by his city, county or state. The manufacturer rejects any liability claim that may result from the incorrect or unlawful application of its equipment.

Section I - PARTS

50011505, 600R KNEE BOOM UNIT . . . . . I-2 thru I-19

• Control Panel & Drag Winch Kit . . . . . I-2 & I-3

• Toolbox Mounting Pads & Hardware . . . . . I-4 & I-5

• RH/LH Toolboxes . . . . . I-6 & I-7

• Airbank, Air Regulator & Water Separator . . . . . I-8 & I-9

• Emergency/Service/Live Air Fittings . . . . . I-10 & I-11

• Mud Flaps & Brackets . . . . . I-12 & I-13

• Drag Winch Hose Connections . . . . . I-14 & I-15

• Pump Kit Fiitings & Suction Hoses . . . . . I-16 & I-17

• RH/LH Main Valves, Hydraulic Tank & Pump Connections . . . . . I-18 & I-19

09016849, DRAG WINCH KIT 600R KB . . . . . I-20 & I-21

09017890, 600R KNEE BOOM BASIC UNIT ASSEMBLY . . . . . I-22 thru I-39

• 600R Knee Boom Assemblies & Front/Rear Slew Shield . . . . . I-22 & I-23

• LH/RH Crosstube Pivot Assy & Crossbar Extension Assy . . . . . I-24 & I-25

• Knee Boom Underlift Extend Cylinder Hydraulic Connections . . . . . I-26 & I-27

• Knee Boom Underlift Tilt Cylinder Hydraulic Connections . . . . . I-28 & I-29

• Knee Boom Underlift Lift Cylinder Hydraulic Connections . . . . . I-30 & I-31

TABLE OF CONTENTS

Section I - PARTS (cont'd)

09017890, 600R KNEE BOOM BASIC UNIT ASSEMBLY (cont'd)

• Swing Control Hydraulic Connections . . . . . I-32 & I-33

• Recovery Boom Lift Cylinder Hydraulic Connections . . . . . I-34 & I-35

• Recovery Boom Extend Cylinder Hydraulic Connections . . . . . I-36 & I-37

• Recovery Winch Hydraulic Connections . . . . . I-38 & I-39

09012010, 600R NO-WINCH KNEE BOOM ASSEMBLY . . . . . I-40 thru I-45

• Lift/Tilt Cylinder, Pin, Timbren Spring, Cover Plate & Bulkhead . . . . . I-40 & I-41

• Underlift Assembly & Insulated Hose Clamp . . . . . I-42 & I-43

• Knee Boom U/L Tilt/Extend Cylinder & Bulkhead Hydraulic Connections . . . . . I-44 & I-45

09017349, UNDERLIFT ASSEMBLY - 600R KNEE BOOM 10K . . . . . I-46 thru I-49

• Inner Underlift Assembly . . . . . I-46 & I-47

• Outer Underlift Assembly . . . . . I-48 & I-49

09017249, RECOVERY BOOM ASSEMBLY - 600R . . . . . I-50 thru I-55

• Inner Boom Assembly, Sheave Assembly & Retaining Rings . . . . . I-50 & I-51

• Outer Boom Weldment, Winch Mounting Bracket, Cable Wing & Pad Cage . . . . . I-52 & I-53

• Recovery Winches, Cable Stow Kit & Lift Cylinder Upper Pin . . . . . I-54 & I-55

09021840, INNER BOOM, 600R KB . . . . . I-56 & I-57

0906572, KIT - WINCH CABLE STOW . . . . . I-58 & I-59

3014-931000, SHEAVE ASSEMBLY . . . . . I-60 & I-61

TABLE OF CONTENTS

Section I - PARTS (cont'd)

09017869, SUBFRAME ASSEMBLY - 600R KB . . . . . I-62 thru I-91

• Slew Lock Assy & Hydraulic Tank With Mounting Brackets . . . . . I-62 & I-63

• Swing Limit Cam Weldment & Bearing Assy . . . . . I-64 & I-65

• Bottom Slew Cover . . . . . I-66 & I-67

• Knee Boom Pivot Brackets, Bearing, Spacer, Retaining Plate & Mtg Reinf. . . . . I-68 & I-69

• Bulkhead Run Tee With Mounting Plate, & Knee Boom Lift Cyl Base Pins . . . . . I-70 & I-71

• Knee Boom Guide Pads & D-Rings . . . . . I-72 & I-73

• Hydraulic Front Outrigger & Pins With Blocks . . . . . I-74 & I-75

• Hydraulic Lh/Rh Rear Outrigger & Pins . . . . . I-76 & I-77

• Rear Tool Box Mounting Brackets . . . . . I-78 & I-79

• LH/RH L-Arm Weldment Stowage Brackets . . . . . I-80 & I-81

• LH/RH Control Valve Assy & RH Control Assy . . . . . I-82 & I-83

• LH Front Outrigger Hoses . . . . . I-84 & I-85

• RH Front Outrigger Hoses . . . . . I-86 & I-87

• Rear Outrigger Hoses . . . . . I-88 & I-89

• Hydraulic Tank Hoses . . . . . I-90 & I-91

09017071, SLEW LOCK ASSEMBLY . . . . . I-92 thru I-95

• Weldment & Lock Assy . . . . . I-92 & I-93

• Brackets & Hardware . . . . . I-94 & I-95

TABLE OF CONTENTS

Section I - PARTS (cont'd)

09017529, CONTROL VALVE ASSEMBLY - 8 SPOOL 600R KNEE BOOM . . . . . I-96 thru I-107

• Walvoil Valve & Fittings (A) . . . . . I-96 & I-97

• Walvoil Valve & Fittings (B) . . . . . I-98 & I-99

• Walvoil Valve Mounting . . . . . I-100 & I-101

• Cross Over Relief Valve . . . . . I-102 & I-103

• Valve Covers & Supports . . . . . I-104 & I-105

• Control Cables . . . . . I-106 & I-107

09017534, CONTROL VALVE ASSEMBLY - 8 SPOOL 600R KNEE BOOM . . . . . I-108 thru I-119

• Walvoil Valve & Fittings (A) . . . . . I-108 & I-109

• Walvoil Valve & Fittings (B) . . . . . I-110 & I-111

• Walvoil Valve Mounting . . . . . I-112 & I-113

• Cross Over Relief Valve . . . . . I-114 & I-115

• Valve Covers & Supports . . . . . I-116 & I-117

• Control Cables . . . . . I-118 & I-119

09017893, CONTROL ASSEMBLY - RH 600R KNEE BOOM . . . . . I-120 thru I-123

• Control Bracket Weldments, Control Handle Assemblies, Pins & Retaining Blocks . . . . . I-120 & I-121

• Control Cables . . . . . I-122 & I-123

3012-980100, HYDRAULIC TANK ASSEMBLY . . . . . I-124 & I-125

TABLE OF CONTENTS

Section I - PARTS (cont'd)

3116-912000, LH REAR OUTRIGGER ASSEMBLY . . . . . I-126 thru I-131

• Up/Down Rear Outrigger Cylinder, Pin & Fittings . . . . . I-126 & I-127

• Rear Inner Outrigger Wldmt, Stop Block & Cover Panel . . . . . I-128 & I-129

• Pivot/Retaining Pins For Rear Outrigger Pad Wldmt & Spade Wldmt . . . . . I-130 & I-131

3116-913000, RH REAR OUTRIGGER ASSEMBLY . . . . . I-132 thru I-137

• Up/Down Rear Outrigger Cylinder, Pin & Fittings . . . . . I-132 & I-133

• Rear Inner Outrigger Wldmt, Stop Block & Cover Panel . . . . . I-134 & I-135

• Pivot/Retaining Pins For Rear Outrigger Pad Wldmt & Spade Wldmt . . . . . I-136 & I-137

3116-916000, FRONT OUTRIGGER ASSEMBLY . . . . . I-138 thru I-145

• Front O/R Up/Dn Cyl, Horizontal/Vertical Wldmt, Spade Wldmt & Pins . . . . . I-138 & I-139

• Ext Function Hose Spring With Sheave Assy & Manual Jack Leg Handle . . . . . I-140 & I-141

• Front Outrigger Extend Cylinder, Fittings, & Pins . . . . . I-142 & I-143

• Front Outrigger Rollers With Mounting Items . . . . . I-144 & I-145

09017889, WRECKER FRAME ASSY - 600R . . . . . I-146 thru I-155

• Planetary Drive With Brake, Swing Control Valve & Hydraulic Motor . . . . . I-146 & I-147

• Swing Limit Valve Assy, Flag Brkt, Clamps & Hyd Swivel Plate Assy . . . . . I-148 & I-149

• Lift Cylinders, Main Boom Pivot & Lower Pins . . . . . I-150 & I-151

• Planetary Dr, Swing Cntrl, Swing Limit Valve & Hyd Swivel Plate Hoses . . . . . I-152 & I-153

• Lift Cylinders & Hydraulic Swivel Plate Assembly Hoses . . . . . I-154 & I-155

TABLE OF CONTENTS

Section I - PARTS (cont'd)

0910238, SWING LIMIT VALVE ASSEMBLY . . . . . I-156 & I-157

28059003, HYDRAULIC SWIVEL ASSEMBLY . . . . . I-158 & I-159

0910320, CROSSTUBE, LH PIVOT ASSY - FABR . . . . . I-160 & I-161

0910321, CROSSTUBE, RH PIVOT ASSY - FABR . . . . . I-162 & I-163

3014-960000, CROSSBAR ASSEMBLY . . . . . I-164 & I-165

09019353, 600R CONTROL PANEL KIT, 30.5" RH . . . . . I-166 thru I-169

• Lower Control Panel Kit . . . . . I-166 & I-167

• Upper Control Panel Kit . . . . . I-168 & I-169

0910535, MANIFOLD PKG 16 VLV 12VDC W/O HNS . . . . . I-170 & I-171

0911804, AIR REGULATOR-GAUGE ASSEMBLY . . . . . I-172 & I-173

NOTES

Section I - PARTS

REF. 05003743

This Section is provided by the manufacturer for the purpose of ordering any component part of the **Holmes 600R Knee Boom** that may be required when part replacement is necessary. Be certain to use only original equipment replacement parts for warranty purposes as well as for keeping your unit in its original state and optimum operating capacities.

When ordering replacement or spare parts be sure to provide the following information to the manufacturer's **Parts Department**.

1. **Manual Number & Date of Publication**
2. **Manual Page Number**
3. **Page Title**
4. **Reference Number of Part Desired**
5. **Part Number**
6. **Part Description**
7. **Quantity of Part Desired**
8. **Unit Serial Number**

Providing this information will help ensure that the correct parts will be delivered to you in an expedient manner without delay. Should additional information be required for repair or replacement of certain components, contact your Wrecker Manufacturer Authorized Representative.

The Manufacturer reserves the right, without notice or obligation, to improve or modify their products, which may change the specifications, models and feature availability.

50011505, 600R KNEE BOOM

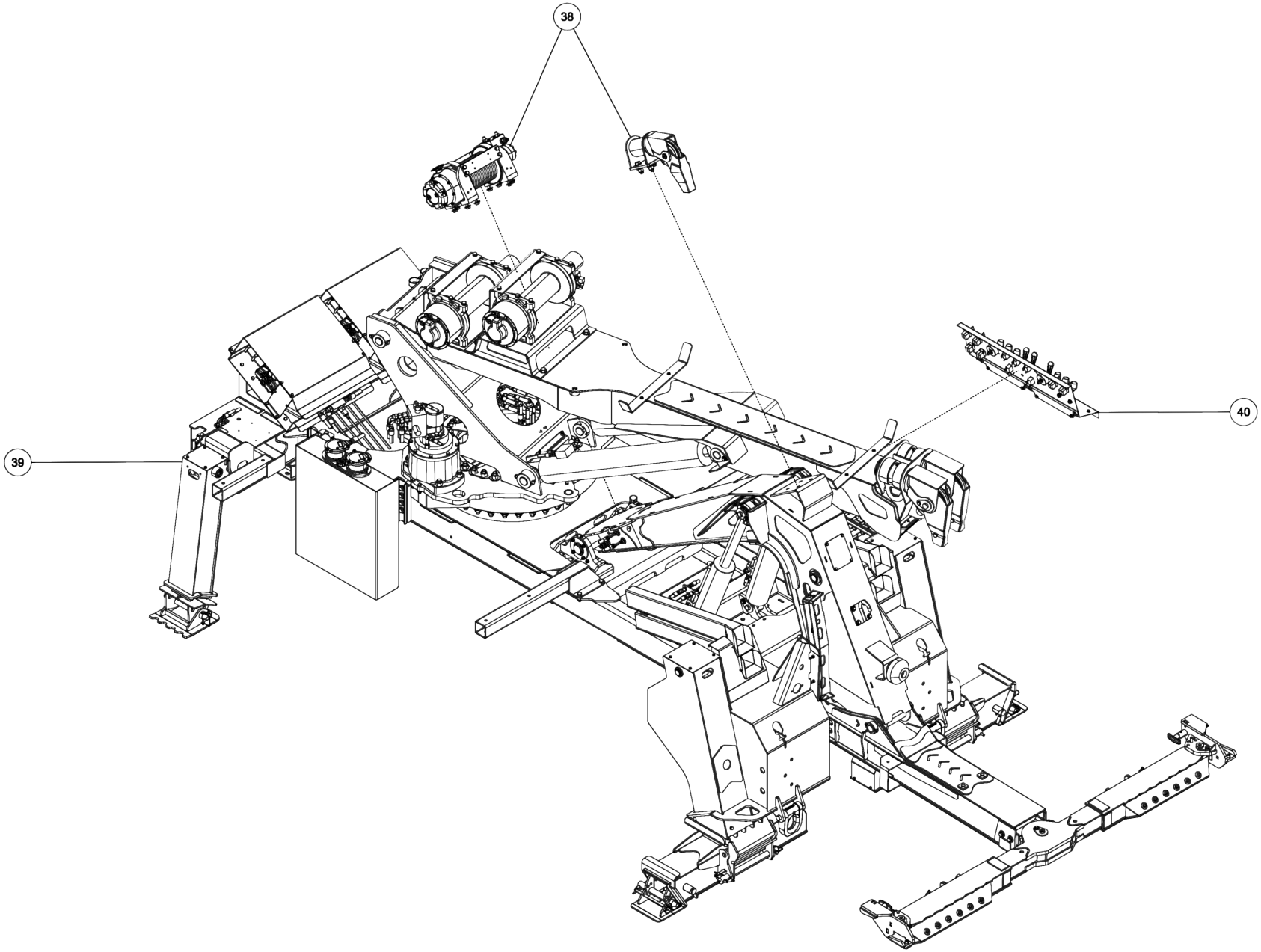

50011505, 600R KNEE BOOM (cont'd)

ITEM	PART NUMBER	DESCRIPTION	QTY
1	0300364	CLAMP-HOSE,0.875"-2.75" 50"LBS	12
2	0301547	FITTING, ELB 8MJ-12MB 90	2
3	0301577	1/4 OD PLASTIC AIRLINE, BLACK	300
4	03018108	SUCTION HOSE,1-1/4ID X15 100R4	1
5	0301909	RECEPTACLE BOOT	1
6	0301946	FITTING, BLKHD CONNECT	3
7	0301947	FITTING, 45 DEG ADAPTER	1
8	0301948	HD 7 WAY TRAILER CONNECT	1
9	0301965	HOSE HYD, 131"	2
10	0302084	FITTING, 90 DEG ELBOW	4
11	03021648	HYDH 116 6FJX-6M3K-6FJX90S	2
12	0302534	FITTING, 45 DEG ELBOW	2
13	0302906	FITTING, ADAPTER	2
14	0302959	1" NPT X 3 LG NIPPLE	4
15	0303538	FITT, ADAPTER -BRASS 8FP-6MP	1
16	0303539	QUICK DISCONNECT 3/8 FPT	1
17	0303867	PUMP, BI-ROTATIONAL	1
18	0304363	QUICK DISCONNECT 1/2 FPT	2
19	0306539	HOSE BARB 20HOSE16MB90	2
20	0307812	HOSE HYD, 222"	2
21	0310019	SUCTION HOSE,1-1/4ID X30 100R4	2
22	0310192	AIR SOL STK 12VDC 4 BANK	1
23	0311755	WATER SEPARATOR-MONNIER	1
24	0400060	SCREW, 1/4-20X1/2 HHC GR5	2
25	0400062	SCREW, 1/4-20X3/4 THC	4
26	0400103	SCREW, 5/16-18X1-1/4 HHC GR5	8
27	0400109	SCREW, 5/16-18X1 HHC GR5	8

ITEM	PART NUMBER	DESCRIPTION	QTY
28	0400237	SCREW, 1/2-13X4 HHC GR5	8
29	0400382	NUT, 5/16-18 LOK	16
30	0400451	WASHER, 1/4	2
31	0400452	LKWASHER, 1/4	2
32	0400463	WASHER, 5/16	30
33	0400464	LKWASHER, 5/16	6
34	0400491	LKWASHER, 1/2	8
35	0400498	WASHER, 1/2X2X0.125	8
36	0400687	SCREW, 10-24X3/4 PRH SS	2
37	0400816	WASHER, M10 SS	2
38	09016849	DRAG WINCH KIT - 600R KB	1
39	09017890	BUA - 600R KNEEBOOM	1
40	09019353	600R CNTRL PNL KIT, 30.5" RH	1
41	0910535	MNFLD PKG 16 VLV 12VDC W/O HNS	1
42	0911804	AIR REGULATOR-GAUGE ASSEMBLY	1
43	3116-780004	BRACKET, LH - MUD FLAP	1
44	3116-780005	BRACKET, RH - MUD FLAP	1
45	3116-780006	PLATE, MUD FLAP BACKING	2
46	3116-970000	BODY ASSY, LH ALUM 100 CA ROT	1
47	3116-971000	BODY ASSY, RH ALUM 100 CA ROT	1
48	9010520	FITTING-ELBOW 1/4T-1/4NPT	2
49	9012927	ADAPTER, 16MP-20BARB	4
50	9041403	1/2 NC X 1 1/2 HHCS PL GR8	8
51	9402970	TOOLBOX MTG. PAD	8
52	942480011	PLATE,SLOT-SS REAR WASHER TBOX	8
53	GO-138B	MUDFLAP	2
54	HC1338	VALVE, BALL, 1 BRASS	4

50011505, 600R KNEE BOOM (cont'd)

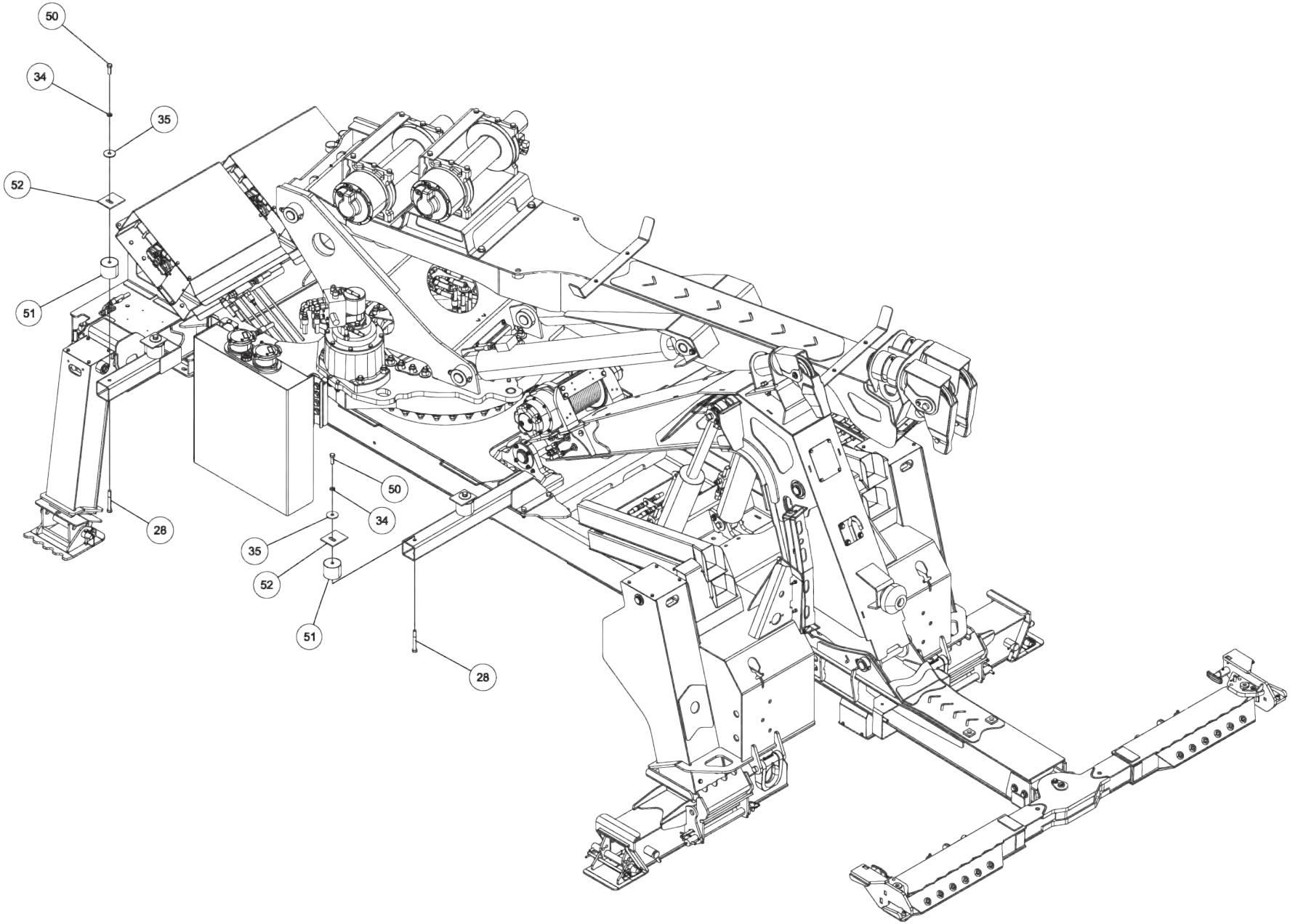

50011505, 600R KNEE BOOM (cont'd)

ITEM	PART NUMBER	DESCRIPTION	QTY
1	0300364	CLAMP-HOSE,0.875"-2.75" 50"LBS	12
2	0301547	FITTING, ELB 8MJ-12MB 90	2
3	0301577	1/4 OD PLASTIC AIRLINE, BLACK	300
4	03018108	SUCTION HOSE,1-1/4ID X15 100R4	1
5	0301909	RECEPTACLE BOOT	1
6	0301946	FITTING, BLKHD CONNECT	3
7	0301947	FITTING, 45 DEG ADAPTER	1
8	0301948	HD 7 WAY TRAILER CONNECT	1
9	0301965	HOSE HYD, 131"	2
10	0302084	FITTING, 90 DEG ELBOW	4
11	03021648	HYDH 116 6FJX-6M3K-6FJX90S	2
12	0302534	FITTING, 45 DEG ELBOW	2
13	0302906	FITTING, ADAPTER	2
14	0302959	1" NPT X 3 LG NIPPLE	4
15	0303538	FITT, ADAPTER -BRASS 8FP-6MP	1
16	0303539	QUICK DISCONNECT 3/8 FPT	1
17	0303867	PUMP, BI-ROTATIONAL	1
18	0304363	QUICK DISCONNECT 1/2 FPT	2
19	0306539	HOSE BARB 20HOSE16MB90	2
20	0307812	HOSE HYD, 222"	2
21	0310019	SUCTION HOSE,1-1/4ID X30 100R4	2
22	0310192	AIR SOL STK 12VDC 4 BANK	1
23	0311755	WATER SEPARATOR-MONNIER	1
24	0400060	SCREW, 1/4-20X1/2 HHC GR5	2
25	0400062	SCREW, 1/4-20X3/4 THC	4
26	0400103	SCREW, 5/16-18X1-1/4 HHC GR5	8
27	0400109	SCREW, 5/16-18X1 HHC GR5	8

ITEM	PART NUMBER	DESCRIPTION	QTY
28	0400237	SCREW, 1/2-13X4 HHC GR5	8
29	0400382	NUT, 5/16-18 LOK	16
30	0400451	WASHER, 1/4	2
31	0400452	LKWASHER, 1/4	2
32	0400463	WASHER, 5/16	30
33	0400464	LKWASHER, 5/16	6
34	0400491	LKWASHER, 1/2	8
35	0400498	WASHER, 1/2X2X0.125	8
36	0400687	SCREW, 10-24X3/4 PRH SS	2
37	0400816	WASHER, M10 SS	2
38	09016849	DRAG WINCH KIT - 600R KB	1
39	09017890	BUA - 600R KNEEBOOM	1
40	09019353	600R CNTRL PNL KIT, 30.5" RH	1
41	0910535	MNFLD PKG 16 VLV 12VDC W/O HNS	1
42	0911804	AIR REGULATOR-GAUGE ASSEMBLY	1
43	3116-780004	BRACKET, LH - MUD FLAP	1
44	3116-780005	BRACKET, RH - MUD FLAP	1
45	3116-780006	PLATE, MUD FLAP BACKING	2
46	3116-970000	BODY ASSY, LH ALUM 100 CA ROT	1
47	3116-971000	BODY ASSY, RH ALUM 100 CA ROT	1
48	9010520	FITTING-ELBOW 1/4T-1/4NPT	2
49	9012927	ADAPTER, 16MP-20BARB	4
50	9041403	1/2 NC X 1 1/2 HHCS PL GR8	8
51	9402970	TOOLBOX MTG. PAD	8
52	942480011	PLATE,SLOT-SS REAR WASHER TBOX	8
53	GO-138B	MUDFLAP	2
54	HC1338	VALVE, BALL, 1 BRASS	4

50011505, 600R KNEE BOOM (cont'd)

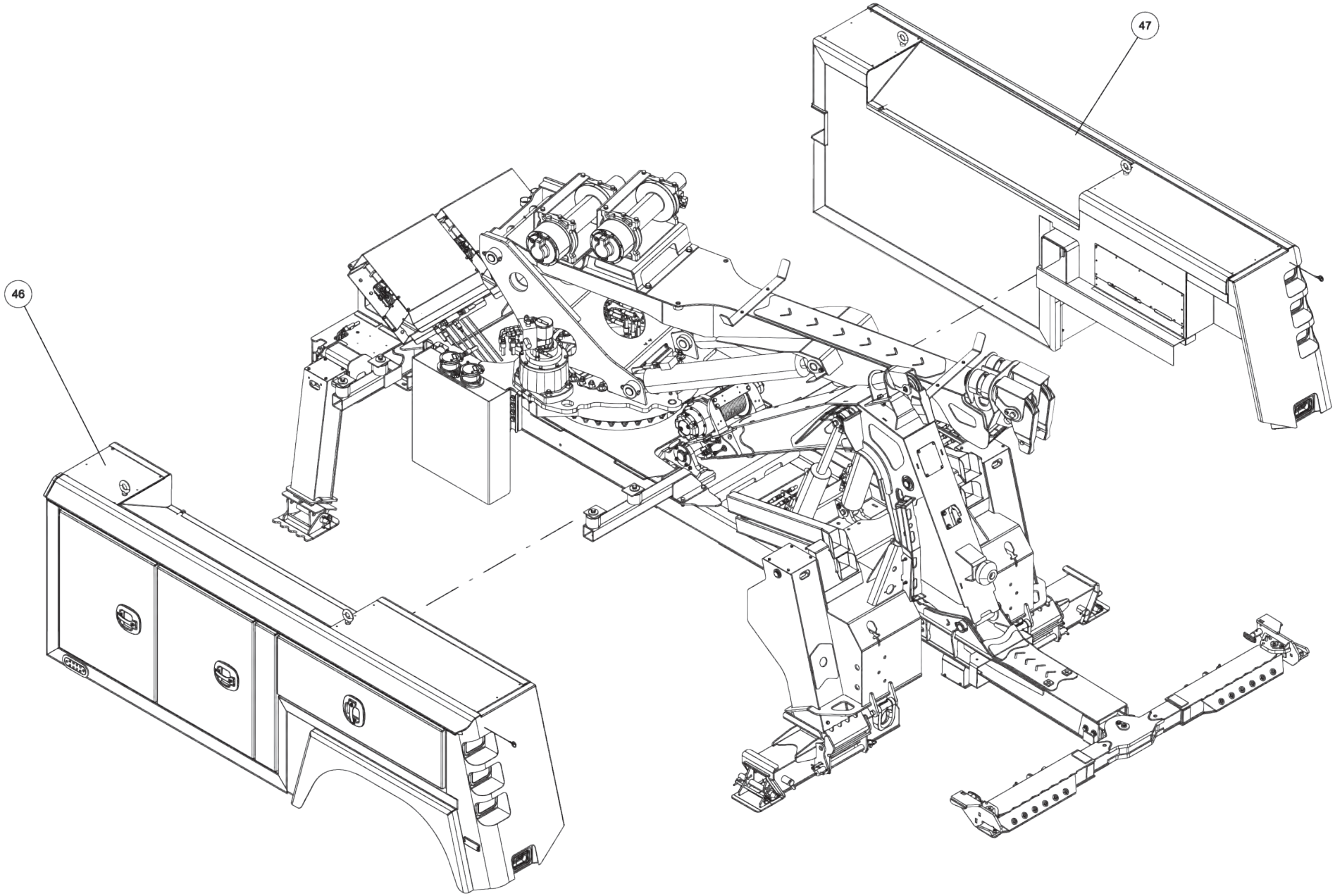

50011505, 600R KNEE BOOM (cont'd)

ITEM	PART NUMBER	DESCRIPTION	QTY
1	0300364	CLAMP-HOSE,0.875"-2.75" 50"LBS	12
2	0301547	FITTING, ELB 8MJ-12MB 90	2
3	0301577	1/4 OD PLASTIC AIRLINE, BLACK	300
4	03018108	SUCTION HOSE,1-1/4ID X15 100R4	1
5	0301909	RECEPTACLE BOOT	1
6	0301946	FITTING, BLKHD CONNECT	3
7	0301947	FITTING, 45 DEG ADAPTER	1
8	0301948	HD 7 WAY TRAILER CONNECT	1
9	0301965	HOSE HYD, 131"	2
10	0302084	FITTING, 90 DEG ELBOW	4
11	03021648	HYDH 116 6FJX-6M3K-6FJX90S	2
12	0302534	FITTING, 45 DEG ELBOW	2
13	0302906	FITTING, ADAPTER	2
14	0302959	1" NPT X 3 LG NIPPLE	4
15	0303538	FITT, ADAPTER -BRASS 8FP-6MP	1
16	0303539	QUICK DISCONNECT 3/8 FPT	1
17	0303867	PUMP, BI-ROTATIONAL	1
18	0304363	QUICK DISCONNECT 1/2 FPT	2
19	0306539	HOSE BARB 20HOSE16MB90	2
20	0307812	HOSE HYD, 222"	2
21	0310019	SUCTION HOSE,1-1/4ID X30 100R4	2
22	0310192	AIR SOL STK 12VDC 4 BANK	1
23	0311755	WATER SEPARATOR-MONNIER	1
24	0400060	SCREW, 1/4-20X1/2 HHC GR5	2
25	0400062	SCREW, 1/4-20X3/4 THC	4
26	0400103	SCREW, 5/16-18X1-1/4 HHC GR5	8
27	0400109	SCREW, 5/16-18X1 HHC GR5	8

ITEM	PART NUMBER	DESCRIPTION	QTY
28	0400237	SCREW, 1/2-13X4 HHC GR5	8
29	0400382	NUT, 5/16-18 LOK	16
30	0400451	WASHER, 1/4	2
31	0400452	LKWASHER, 1/4	2
32	0400463	WASHER, 5/16	30
33	0400464	LKWASHER, 5/16	6
34	0400491	LKWASHER, 1/2	8
35	0400498	WASHER, 1/2X2X0.125	8
36	0400687	SCREW, 10-24X3/4 PRH SS	2
37	0400816	WASHER, M10 SS	2
38	09016849	DRAG WINCH KIT - 600R KB	1
39	09017890	BUA - 600R KNEEBOOM	1
40	09019353	600R CNTRL PNL KIT, 30.5" RH	1
41	0910535	MNFLD PKG 16 VLV 12VDC W/O HNS	1
42	0911804	AIR REGULATOR-GAUGE ASSEMBLY	1
43	3116-780004	BRACKET, LH - MUD FLAP	1
44	3116-780005	BRACKET, RH - MUD FLAP	1
45	3116-780006	PLATE, MUD FLAP BACKING	2
46	3116-970000	BODY ASSY, LH ALUM 100 CA ROT	1
47	3116-971000	BODY ASSY, RH ALUM 100 CA ROT	1
48	9010520	FITTING-ELBOW 1/4T-1/4NPT	2
49	9012927	ADAPTER, 16MP-20BARB	4
50	9041403	1/2 NC X 1 1/2 HHCS PL GR8	8
51	9402970	TOOLBOX MTG. PAD	8
52	942480011	PLATE,SLOT-SS REAR WASHER TBOX	8
53	GO-138B	MUDFLAP	2
54	HC1338	VALVE, BALL, 1 BRASS	4

50011505, 600R KNEE BOOM (cont'd)

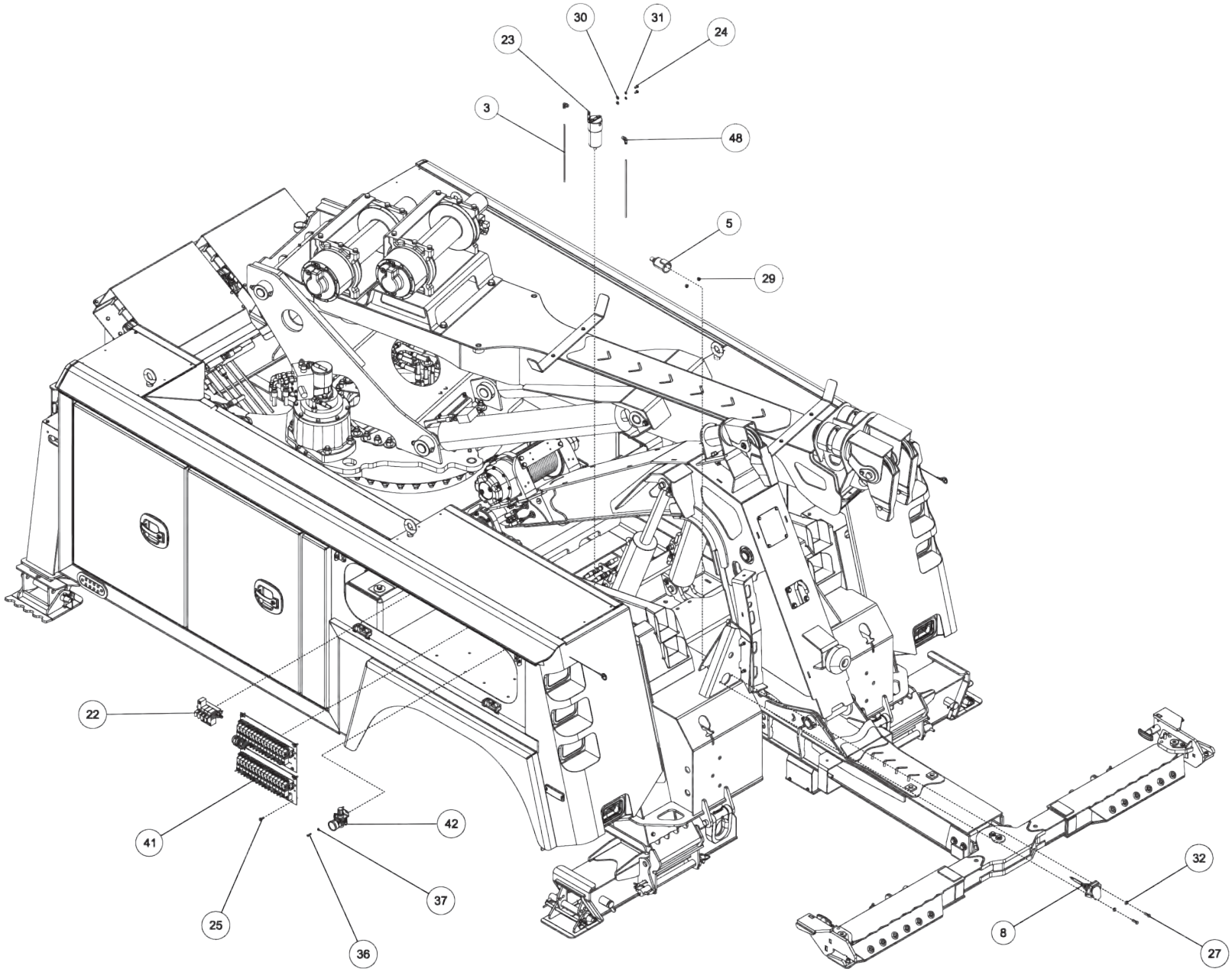

50011505, 600R KNEE BOOM (cont'd)

ITEM	PART NUMBER	DESCRIPTION	QTY
1	0300364	CLAMP-HOSE,0.875"-2.75" 50"LBS	12
2	0301547	FITTING, ELB 8MJ-12MB 90	2
3	0301577	1/4 OD PLASTIC AIRLINE, BLACK	300
4	03018108	SUCTION HOSE,1-1/4ID X15 100R4	1
5	0301909	RECEPTACLE BOOT	1
6	0301946	FITTING, BLKHD CONNECT	3
7	0301947	FITTING, 45 DEG ADAPTER	1
8	0301948	HD 7 WAY TRAILER CONNECT	1
9	0301965	HOSE HYD, 131"	2
10	0302084	FITTING, 90 DEG ELBOW	4
11	03021648	HYDH 116 6FJX-6M3K-6FJX90S	2
12	0302534	FITTING, 45 DEG ELBOW	2
13	0302906	FITTING, ADAPTER	2
14	0302959	1" NPT X 3 LG NIPPLE	4
15	0303538	FITT, ADAPTER -BRASS 8FP-6MP	1
16	0303539	QUICK DISCONNECT 3/8 FPT	1
17	0303867	PUMP, BI-ROTATIONAL	1
18	0304363	QUICK DISCONNECT 1/2 FPT	2
19	0306539	HOSE BARB 20HOSE16MB90	2
20	0307812	HOSE HYD, 222"	2
21	0310019	SUCTION HOSE,1-1/4ID X30 100R4	2
22	0310192	AIR SOL STK 12VDC 4 BANK	1
23	0311755	WATER SEPARATOR-MONNIER	1
24	0400060	SCREW, 1/4-20X1/2 HHC GR5	2
25	0400062	SCREW, 1/4-20X3/4 THC	4
26	0400103	SCREW, 5/16-18X1-1/4 HHC GR5	8
27	0400109	SCREW, 5/16-18X1 HHC GR5	8

ITEM	PART NUMBER	DESCRIPTION	QTY
28	0400237	SCREW, 1/2-13X4 HHC GR5	8
29	0400382	NUT, 5/16-18 LOK	16
30	0400451	WASHER, 1/4	2
31	0400452	LKWASHER, 1/4	2
32	0400463	WASHER, 5/16	30
33	0400464	LKWASHER, 5/16	6
34	0400491	LKWASHER, 1/2	8
35	0400498	WASHER, 1/2X2X0.125	8
36	0400687	SCREW, 10-24X3/4 PRH SS	2
37	0400816	WASHER, M10 SS	2
38	09016849	DRAG WINCH KIT - 600R KB	1
39	09017890	BUA - 600R KNEEBOOM	1
40	09019353	600R CNTRL PNL KIT, 30.5" RH	1
41	0910535	MNFLD PKG 16 VLV 12VDC W/O HNS	1
42	0911804	AIR REGULATOR-GAUGE ASSEMBLY	1
43	3116-780004	BRACKET, LH - MUD FLAP	1
44	3116-780005	BRACKET, RH - MUD FLAP	1
45	3116-780006	PLATE, MUD FLAP BACKING	2
46	3116-970000	BODY ASSY, LH ALUM 100 CA ROT	1
47	3116-971000	BODY ASSY, RH ALUM 100 CA ROT	1
48	9010520	FITTING-ELBOW 1/4T-1/4NPT	2
49	9012927	ADAPTER, 16MP-20BARB	4
50	9041403	1/2 NC X 1 1/2 HHCS PL GR8	8
51	9402970	TOOLBOX MTG. PAD	8
52	942480011	PLATE,SLOT-SS REAR WASHER TBOX	8
53	GO-138B	MUDFLAP	2
54	HC1338	VALVE, BALL, 1 BRASS	4

50011505, 600R KNEE BOOM (cont'd)

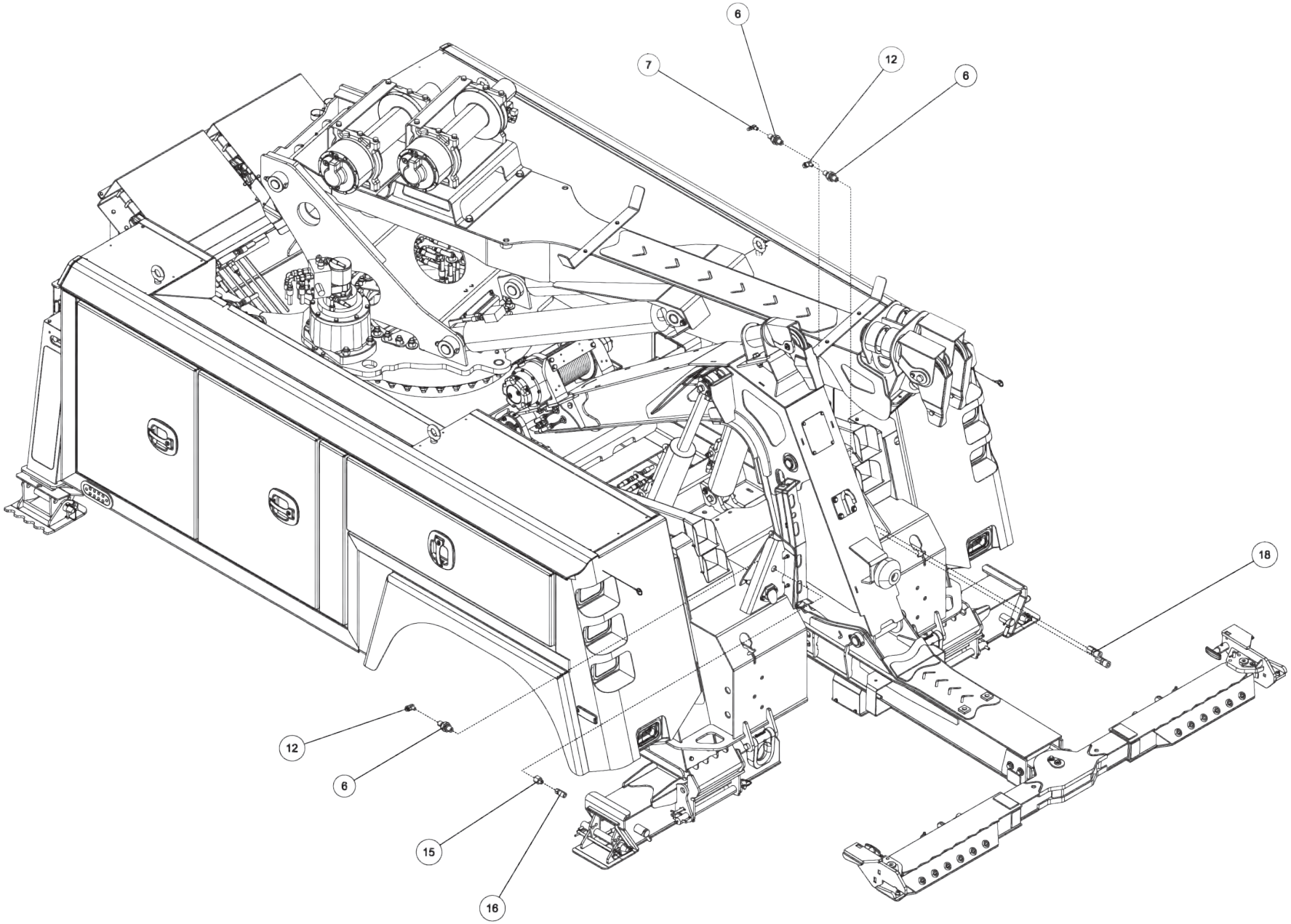

50011505, 600R KNEE BOOM (cont'd)

ITEM	PART NUMBER	DESCRIPTION	QTY
1	0300364	CLAMP-HOSE,0.875"-2.75" 50"LBS	12
2	0301547	FITTING, ELB 8MJ-12MB 90	2
3	0301577	1/4 OD PLASTIC AIRLINE, BLACK	300
4	03018108	SUCTION HOSE,1-1/4ID X15 100R4	1
5	0301909	RECEPTACLE BOOT	1
6	0301946	FITTING, BLKHD CONNECT	3
7	0301947	FITTING, 45 DEG ADAPTER	1
8	0301948	HD 7 WAY TRAILER CONNECT	1
9	0301965	HOSE HYD, 131"	2
10	0302084	FITTING, 90 DEG ELBOW	4
11	03021648	HYDH 116 6FJX-6M3K-6FJX90S	2
12	0302534	FITTING, 45 DEG ELBOW	2
13	0302906	FITTING, ADAPTER	2
14	0302959	1" NPT X 3 LG NIPPLE	4
15	0303538	FITT, ADAPTER -BRASS 8FP-6MP	1
16	0303539	QUICK DISCONNECT 3/8 FPT	1
17	0303867	PUMP, BI-ROTATIONAL	1
18	0304363	QUICK DISCONNECT 1/2 FPT	2
19	0306539	HOSE BARB 20HOSE16MB90	2
20	0307812	HOSE HYD, 222"	2
21	0310019	SUCTION HOSE,1-1/4ID X30 100R4	2
22	0310192	AIR SOL STK 12VDC 4 BANK	1
23	0311755	WATER SEPARATOR-MONNIER	1
24	0400060	SCREW, 1/4-20X1/2 HHC GR5	2
25	0400062	SCREW, 1/4-20X3/4 THC	4
26	0400103	SCREW, 5/16-18X1-1/4 HHC GR5	8
27	0400109	SCREW, 5/16-18X1 HHC GR5	8

ITEM	PART NUMBER	DESCRIPTION	QTY
28	0400237	SCREW, 1/2-13X4 HHC GR5	8
29	0400382	NUT, 5/16-18 LOK	16
30	0400451	WASHER, 1/4	2
31	0400452	LKWASHER, 1/4	2
32	0400463	WASHER, 5/16	30
33	0400464	LKWASHER, 5/16	6
34	0400491	LKWASHER, 1/2	8
35	0400498	WASHER, 1/2X2X0.125	8
36	0400687	SCREW, 10-24X3/4 PRH SS	2
37	0400816	WASHER, M10 SS	2
38	09016849	DRAG WINCH KIT - 600R KB	1
39	09017890	BUA - 600R KNEEBOOM	1
40	09019353	600R CNTRL PNL KIT, 30.5" RH	1
41	0910535	MNFLD PKG 16 VLV 12VDC W/O HNS	1
42	0911804	AIR REGULATOR-GAUGE ASSEMBLY	1
43	3116-780004	BRACKET, LH - MUD FLAP	1
44	3116-780005	BRACKET, RH - MUD FLAP	1
45	3116-780006	PLATE, MUD FLAP BACKING	2
46	3116-970000	BODY ASSY, LH ALUM 100 CA ROT	1
47	3116-971000	BODY ASSY, RH ALUM 100 CA ROT	1
48	9010520	FITTING-ELBOW 1/4T-1/4NPT	2
49	9012927	ADAPTER, 16MP-20BARB	4
50	9041403	1/2 NC X 1 1/2 HHCS PL GR8	8
51	9402970	TOOLBOX MTG. PAD	8
52	942480011	PLATE,SLOT-SS REAR WASHER TBOX	8
53	GO-138B	MUDFLAP	2
54	HC1338	VALVE, BALL, 1 BRASS	4

50011505, 600R KNEE BOOM (cont'd)

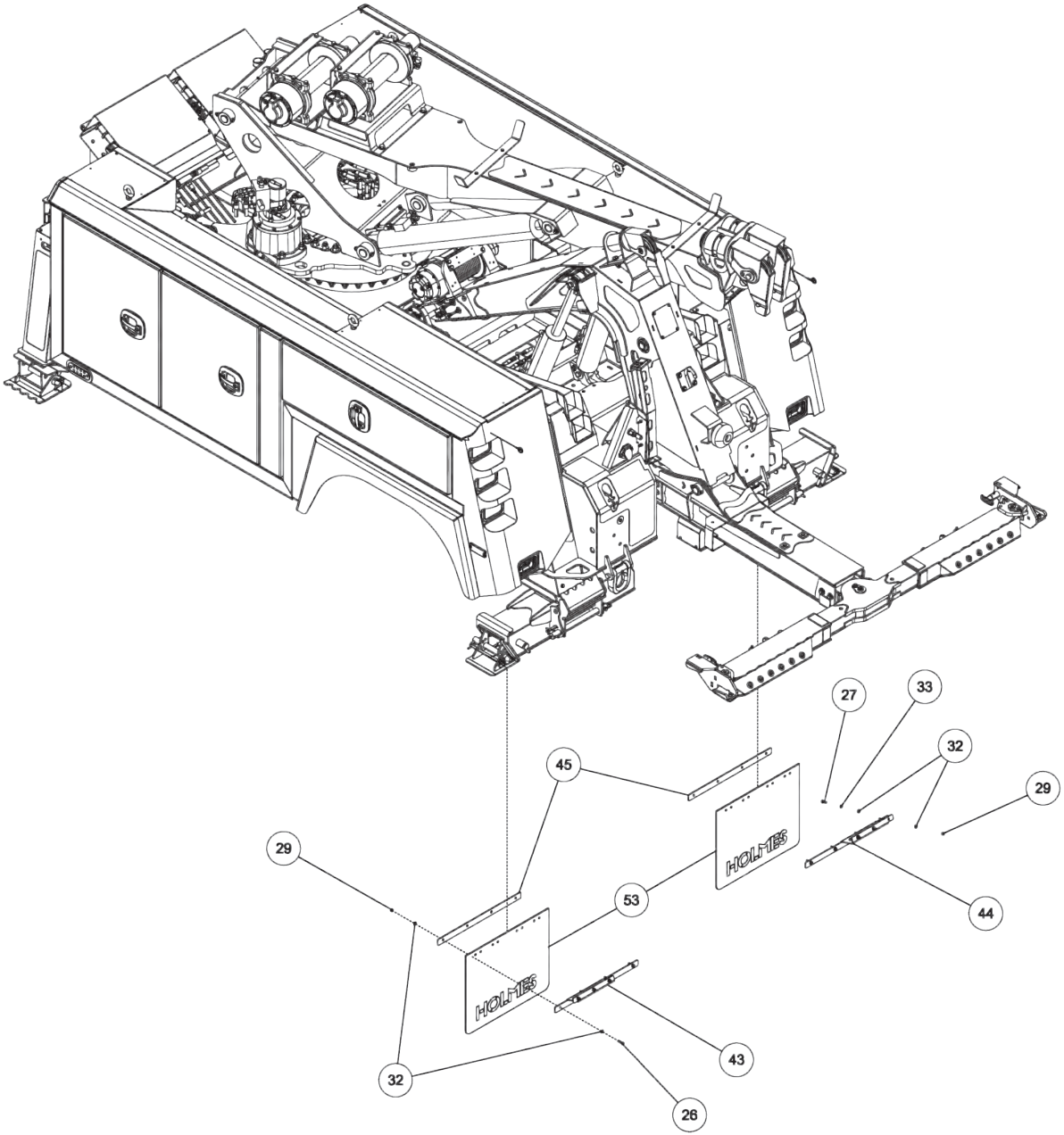

50011505, 600R KNEE BOOM (cont'd)

ITEM	PART NUMBER	DESCRIPTION	QTY
1	0300364	CLAMP-HOSE,0.875"-2.75" 50"LBS	12
2	0301547	FITTING, ELB 8MJ-12MB 90	2
3	0301577	1/4 OD PLASTIC AIRLINE, BLACK	300
4	03018108	SUCTION HOSE,1-1/4ID X15 100R4	1
5	0301909	RECEPTACLE BOOT	1
6	0301946	FITTING, BLKHD CONNECT	3
7	0301947	FITTING, 45 DEG ADAPTER	1
8	0301948	HD 7 WAY TRAILER CONNECT	1
9	0301965	HOSE HYD, 131"	2
10	0302084	FITTING, 90 DEG ELBOW	4
11	03021648	HYDH 116 6FJX-6M3K-6FJX90S	2
12	0302534	FITTING, 45 DEG ELBOW	2
13	0302906	FITTING, ADAPTER	2
14	0302959	1" NPT X 3 LG NIPPLE	4
15	0303538	FITT, ADAPTER -BRASS 8FP-6MP	1
16	0303539	QUICK DISCONNECT 3/8 FPT	1
17	0303867	PUMP, BI-ROTATIONAL	1
18	0304363	QUICK DISCONNECT 1/2 FPT	2
19	0306539	HOSE BARB 20HOSE16MB90	2
20	0307812	HOSE HYD, 222"	2
21	0310019	SUCTION HOSE,1-1/4ID X30 100R4	2
22	0310192	AIR SOL STK 12VDC 4 BANK	1
23	0311755	WATER SEPARATOR-MONNIER	1
24	0400060	SCREW, 1/4-20X1/2 HHC GR5	2
25	0400062	SCREW, 1/4-20X3/4 THC	4
26	0400103	SCREW, 5/16-18X1-1/4 HHC GR5	8
27	0400109	SCREW, 5/16-18X1 HHC GR5	8

ITEM	PART NUMBER	DESCRIPTION	QTY
28	0400237	SCREW, 1/2-13X4 HHC GR5	8
29	0400382	NUT, 5/16-18 LOK	16
30	0400451	WASHER, 1/4	2
31	0400452	LKWASHER, 1/4	2
32	0400463	WASHER, 5/16	30
33	0400464	LKWASHER, 5/16	6
34	0400491	LKWASHER, 1/2	8
35	0400498	WASHER, 1/2X2X0.125	8
36	0400687	SCREW, 10-24X3/4 PRH SS	2
37	0400816	WASHER, M10 SS	2
38	09016849	DRAG WINCH KIT - 600R KB	1
39	09017890	BUA - 600R KNEEBOOM	1
40	09019353	600R CNTRL PNL KIT, 30.5" RH	1
41	0910535	MNFLD PKG 16 VLV 12VDC W/O HNS	1
42	0911804	AIR REGULATOR-GAUGE ASSEMBLY	1
43	3116-780004	BRACKET, LH - MUD FLAP	1
44	3116-780005	BRACKET, RH - MUD FLAP	1
45	3116-780006	PLATE, MUD FLAP BACKING	2
46	3116-970000	BODY ASSY, LH ALUM 100 CA ROT	1
47	3116-971000	BODY ASSY, RH ALUM 100 CA ROT	1
48	9010520	FITTING-ELBOW 1/4T-1/4NPT	2
49	9012927	ADAPTER, 16MP-20BARB	4
50	9041403	1/2 NC X 1 1/2 HHCS PL GR8	8
51	9402970	TOOLBOX MTG. PAD	8
52	942480011	PLATE,SLOT-SS REAR WASHER TBOX	8
53	GO-138B	MUDFLAP	2
54	HC1338	VALVE, BALL, 1 BRASS	4

50011505, 600R KNEE BOOM (cont'd)

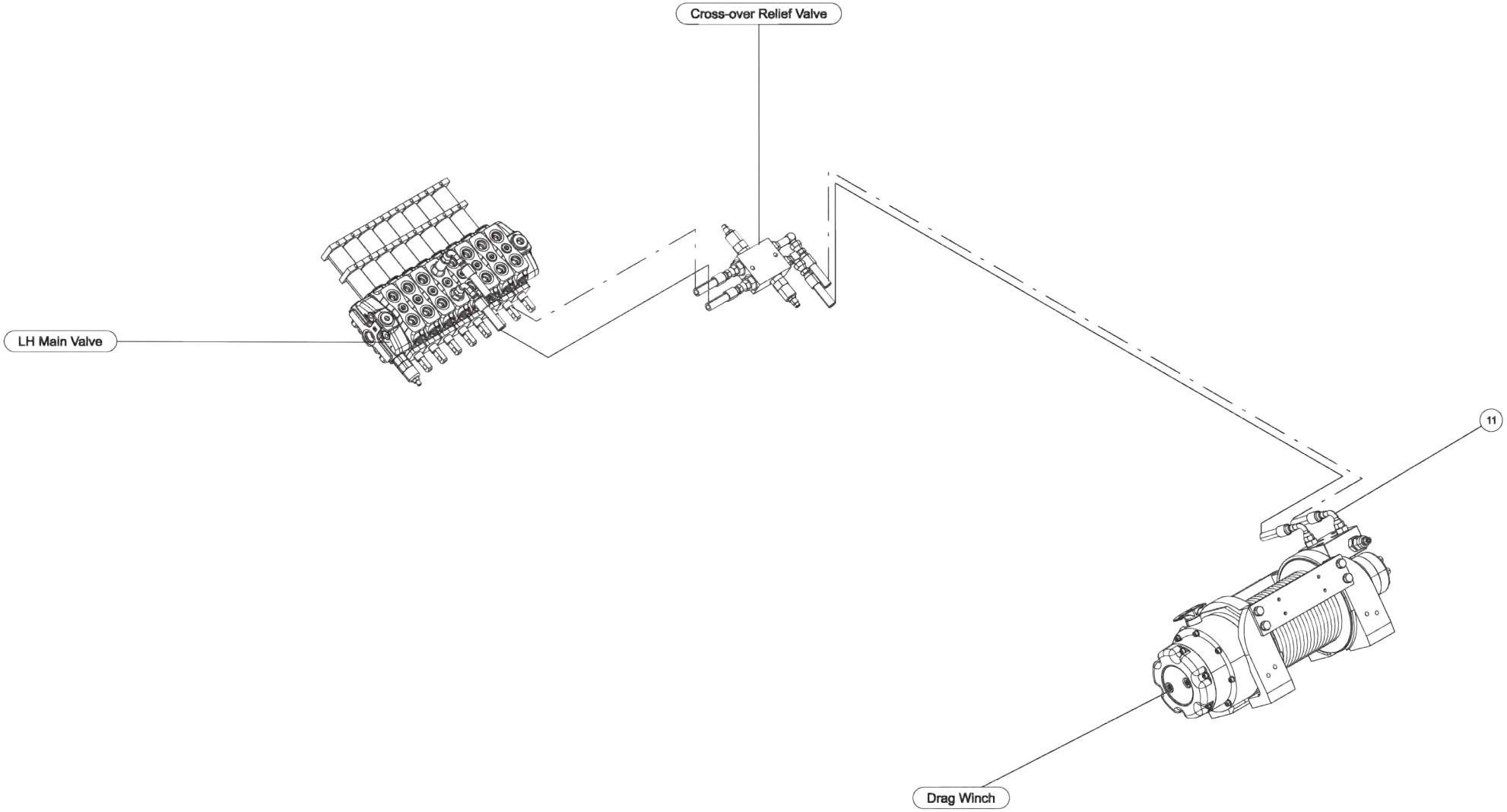

50011505, 600R KNEE BOOM (cont'd)

ITEM	PART NUMBER	DESCRIPTION	QTY
1	0300364	CLAMP-HOSE,0.875"-2.75" 50"LBS	12
2	0301547	FITTING, ELB 8MJ-12MB 90	2
3	0301577	1/4 OD PLASTIC AIRLINE, BLACK	300
4	03018108	SUCTION HOSE,1-1/4ID X15 100R4	1
5	0301909	RECEPTACLE BOOT	1
6	0301946	FITTING, BLKHD CONNECT	3
7	0301947	FITTING, 45 DEG ADAPTER	1
8	0301948	HD 7 WAY TRAILER CONNECT	1
9	0301965	HOSE HYD, 131"	2
10	0302084	FITTING, 90 DEG ELBOW	4
11	03021648	HYDH 116 6FJX-6M3K-6FJX90S	2
12	0302534	FITTING, 45 DEG ELBOW	2
13	0302906	FITTING, ADAPTER	2
14	0302959	1" NPT X 3 LG NIPPLE	4
15	0303538	FITT, ADAPTER -BRASS 8FP-6MP	1
16	0303539	QUICK DISCONNECT 3/8 FPT	1
17	0303867	PUMP, BI-ROTATIONAL	1
18	0304363	QUICK DISCONNECT 1/2 FPT	2
19	0306539	HOSE BARB 20HOSE16MB90	2
20	0307812	HOSE HYD, 222"	2
21	0310019	SUCTION HOSE,1-1/4ID X30 100R4	2
22	0310192	AIR SOL STK 12VDC 4 BANK	1
23	0311755	WATER SEPARATOR-MONNIER	1
24	0400060	SCREW, 1/4-20X1/2 HHC GR5	2
25	0400062	SCREW, 1/4-20X3/4 THC	4
26	0400103	SCREW, 5/16-18X1-1/4 HHC GR5	8
27	0400109	SCREW, 5/16-18X1 HHC GR5	8

ITEM	PART NUMBER	DESCRIPTION	QTY
28	0400237	SCREW, 1/2-13X4 HHC GR5	8
29	0400382	NUT, 5/16-18 LOK	16
30	0400451	WASHER, 1/4	2
31	0400452	LKWASHER, 1/4	2
32	0400463	WASHER, 5/16	30
33	0400464	LKWASHER, 5/16	6
34	0400491	LKWASHER, 1/2	8
35	0400498	WASHER, 1/2X2X0.125	8
36	0400687	SCREW, 10-24X3/4 PRH SS	2
37	0400816	WASHER, M10 SS	2
38	09016849	DRAG WINCH KIT - 600R KB	1
39	09017890	BUA - 600R KNEEBOOM	1
40	09019353	600R CNTRL PNL KIT, 30.5" RH	1
41	0910535	MNFLD PKG 16 VLV 12VDC W/O HNS	1
42	0911804	AIR REGULATOR-GAUGE ASSEMBLY	1
43	3116-780004	BRACKET, LH - MUD FLAP	1
44	3116-780005	BRACKET, RH - MUD FLAP	1
45	3116-780006	PLATE, MUD FLAP BACKING	2
46	3116-970000	BODY ASSY, LH ALUM 100 CA ROT	1
47	3116-971000	BODY ASSY, RH ALUM 100 CA ROT	1
48	9010520	FITTING-ELBOW 1/4T-1/4NPT	2
49	9012927	ADAPTER, 16MP-20BARB	4
50	9041403	1/2 NC X 1 1/2 HHCS PL GR8	8
51	9402970	TOOLBOX MTG. PAD	8
52	942480011	PLATE,SLOT-SS REAR WASHER TBOX	8
53	GO-138B	MUDFLAP	2
54	HC1338	VALVE, BALL, 1 BRASS	4

50011505, 600R KNEE BOOM (cont'd)

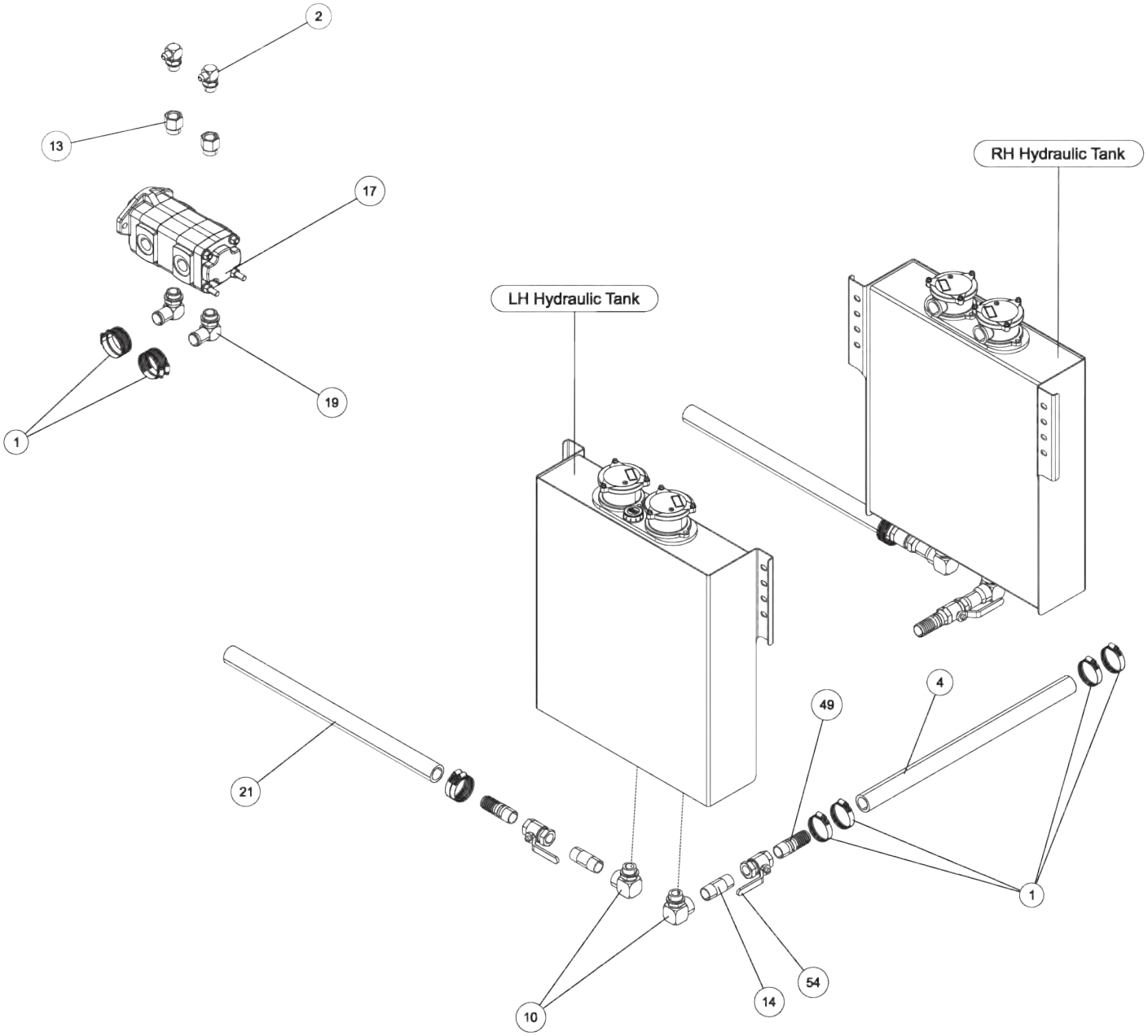

50011505, 600R KNEE BOOM (cont'd)

ITEM	PART NUMBER	DESCRIPTION	QTY
1	0300364	CLAMP-HOSE,0.875"-2.75" 50"LBS	12
2	0301547	FITTING, ELB 8MJ-12MB 90	2
3	0301577	1/4 OD PLASTIC AIRLINE, BLACK	300
4	03018108	SUCTION HOSE,1-1/4ID X15 100R4	1
5	0301909	RECEPTACLE BOOT	1
6	0301946	FITTING, BLKHD CONNECT	3
7	0301947	FITTING, 45 DEG ADAPTER	1
8	0301948	HD 7 WAY TRAILER CONNECT	1
9	0301965	HOSE HYD, 131"	2
10	0302084	FITTING, 90 DEG ELBOW	4
11	03021648	HYDH 116 6FJX-6M3K-6FJX90S	2
12	0302534	FITTING, 45 DEG ELBOW	2
13	0302906	FITTING, ADAPTER	2
14	0302959	1" NPT X 3 LG NIPPLE	4
15	0303538	FITT, ADAPTER -BRASS 8FP-6MP	1
16	0303539	QUICK DISCONNECT 3/8 FPT	1
17	0303867	PUMP, BI-ROTATIONAL	1
18	0304363	QUICK DISCONNECT 1/2 FPT	2
19	0306539	HOSE BARB 20HOSE16MB90	2
20	0307812	HOSE HYD, 222"	2
21	0310019	SUCTION HOSE,1-1/4ID X30 100R4	2
22	0310192	AIR SOL STK 12VDC 4 BANK	1
23	0311755	WATER SEPARATOR-MONNIER	1
24	0400060	SCREW, 1/4-20X1/2 HHC GR5	2
25	0400062	SCREW, 1/4-20X3/4 THC	4
26	0400103	SCREW, 5/16-18X1-1/4 HHC GR5	8
27	0400109	SCREW, 5/16-18X1 HHC GR5	8

ITEM	PART NUMBER	DESCRIPTION	QTY
28	0400237	SCREW, 1/2-13X4 HHC GR5	8
29	0400382	NUT, 5/16-18 LOK	16
30	0400451	WASHER, 1/4	2
31	0400452	LKWASHER, 1/4	2
32	0400463	WASHER, 5/16	30
33	0400464	LKWASHER, 5/16	6
34	0400491	LKWASHER, 1/2	8
35	0400498	WASHER, 1/2X2X0.125	8
36	0400687	SCREW, 10-24X3/4 PRH SS	2
37	0400816	WASHER, M10 SS	2
38	09016849	DRAG WINCH KIT - 600R KB	1
39	09017890	BUA - 600R KNEEBOOM	1
40	09019353	600R CNTRL PNL KIT, 30.5" RH	1
41	0910535	MNFLD PKG 16 VLV 12VDC W/O HNS	1
42	0911804	AIR REGULATOR-GAUGE ASSEMBLY	1
43	3116-780004	BRACKET, LH - MUD FLAP	1
44	3116-780005	BRACKET, RH - MUD FLAP	1
45	3116-780006	PLATE, MUD FLAP BACKING	2
46	3116-970000	BODY ASSY, LH ALUM 100 CA ROT	1
47	3116-971000	BODY ASSY, RH ALUM 100 CA ROT	1
48	9010520	FITTING-ELBOW 1/4T-1/4NPT	2
49	9012927	ADAPTER, 16MP-20BARB	4
50	9041403	1/2 NC X 1 1/2 HHCS PL GR8	8
51	9402970	TOOLBOX MTG. PAD	8
52	942480011	PLATE,SLOT-SS REAR WASHER TBOX	8
53	GO-138B	MUDFLAP	2
54	HC1338	VALVE, BALL, 1 BRASS	4

50011505, 600R KNEE BOOM (cont'd)

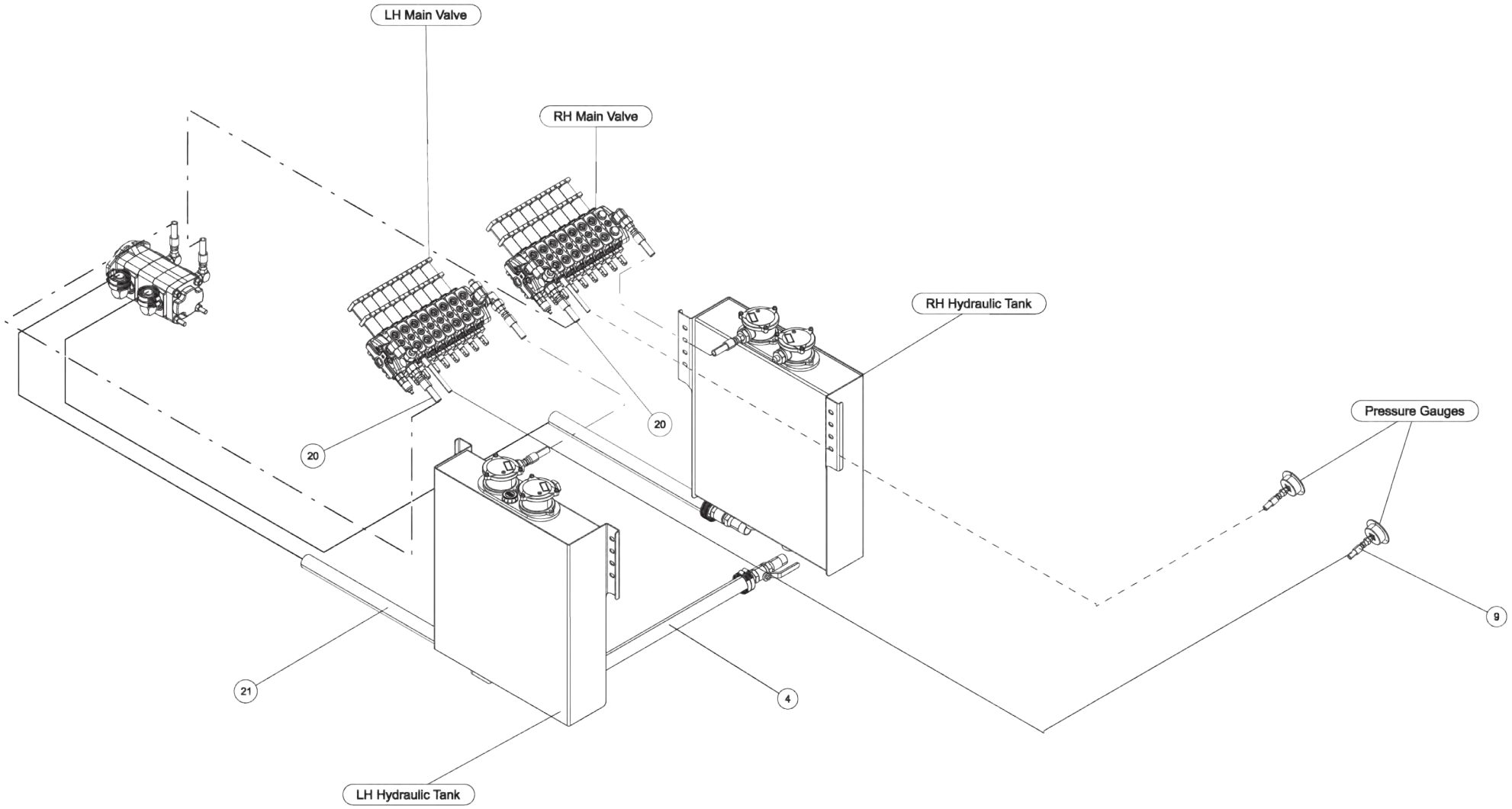

50011505, 600R KNEE BOOM (cont'd)

ITEM	PART NUMBER	DESCRIPTION	QTY
1	0300364	CLAMP-HOSE,0.875"-2.75" 50"LBS	12
2	0301547	FITTING, ELB 8MJ-12MB 90	2
3	0301577	1/4 OD PLASTIC AIRLINE, BLACK	300
4	03018108	SUCTION HOSE,1-1/4ID X15 100R4	1
5	0301909	RECEPTACLE BOOT	1
6	0301946	FITTING, BLKHD CONNECT	3
7	0301947	FITTING, 45 DEG ADAPTER	1
8	0301948	HD 7 WAY TRAILER CONNECT	1
9	0301965	HOSE HYD, 131"	2
10	0302084	FITTING, 90 DEG ELBOW	4
11	03021648	HYDH 116 6FJX-6M3K-6FJX90S	2
12	0302534	FITTING, 45 DEG ELBOW	2
13	0302906	FITTING, ADAPTER	2
14	0302959	1" NPT X 3 LG NIPPLE	4
15	0303538	FITT, ADAPTER -BRASS 8FP-6MP	1
16	0303539	QUICK DISCONNECT 3/8 FPT	1
17	0303867	PUMP, BI-ROTATIONAL	1
18	0304363	QUICK DISCONNECT 1/2 FPT	2
19	0306539	HOSE BARB 20HOSE16MB90	2
20	0307812	HOSE HYD, 222"	2
21	0310019	SUCTION HOSE,1-1/4ID X30 100R4	2
22	0310192	AIR SOL STK 12VDC 4 BANK	1
23	0311755	WATER SEPARATOR-MONNIER	1
24	0400060	SCREW, 1/4-20X1/2 HHC GR5	2
25	0400062	SCREW, 1/4-20X3/4 THC	4
26	0400103	SCREW, 5/16-18X1-1/4 HHC GR5	8
27	0400109	SCREW, 5/16-18X1 HHC GR5	8

ITEM	PART NUMBER	DESCRIPTION	QTY
28	0400237	SCREW, 1/2-13X4 HHC GR5	8
29	0400382	NUT, 5/16-18 LOK	16
30	0400451	WASHER, 1/4	2
31	0400452	LKWASHER, 1/4	2
32	0400463	WASHER, 5/16	30
33	0400464	LKWASHER, 5/16	6
34	0400491	LKWASHER, 1/2	8
35	0400498	WASHER, 1/2X2X0.125	8
36	0400687	SCREW, 10-24X3/4 PRH SS	2
37	0400816	WASHER, M10 SS	2
38	09016849	DRAG WINCH KIT - 600R KB	1
39	09017890	BUA - 600R KNEEBOOM	1
40	09019353	600R CNTRL PNL KIT, 30.5" RH	1
41	0910535	MNFLD PKG 16 VLV 12VDC W/O HNS	1
42	0911804	AIR REGULATOR-GAUGE ASSEMBLY	1
43	3116-780004	BRACKET, LH - MUD FLAP	1
44	3116-780005	BRACKET, RH - MUD FLAP	1
45	3116-780006	PLATE, MUD FLAP BACKING	2
46	3116-970000	BODY ASSY, LH ALUM 100 CA ROT	1
47	3116-971000	BODY ASSY, RH ALUM 100 CA ROT	1
48	9010520	FITTING-ELBOW 1/4T-1/4NPT	2
49	9012927	ADAPTER, 16MP-20BARB	4
50	9041403	1/2 NC X 1 1/2 HHCS PL GR8	8
51	9402970	TOOLBOX MTG. PAD	8
52	942480011	PLATE,SLOT-SS REAR WASHER TBOX	8
53	GO-138B	MUDFLAP	2
54	HC1338	VALVE, BALL, 1 BRASS	4

09016849, DRAG WINCH KIT - 600R KB

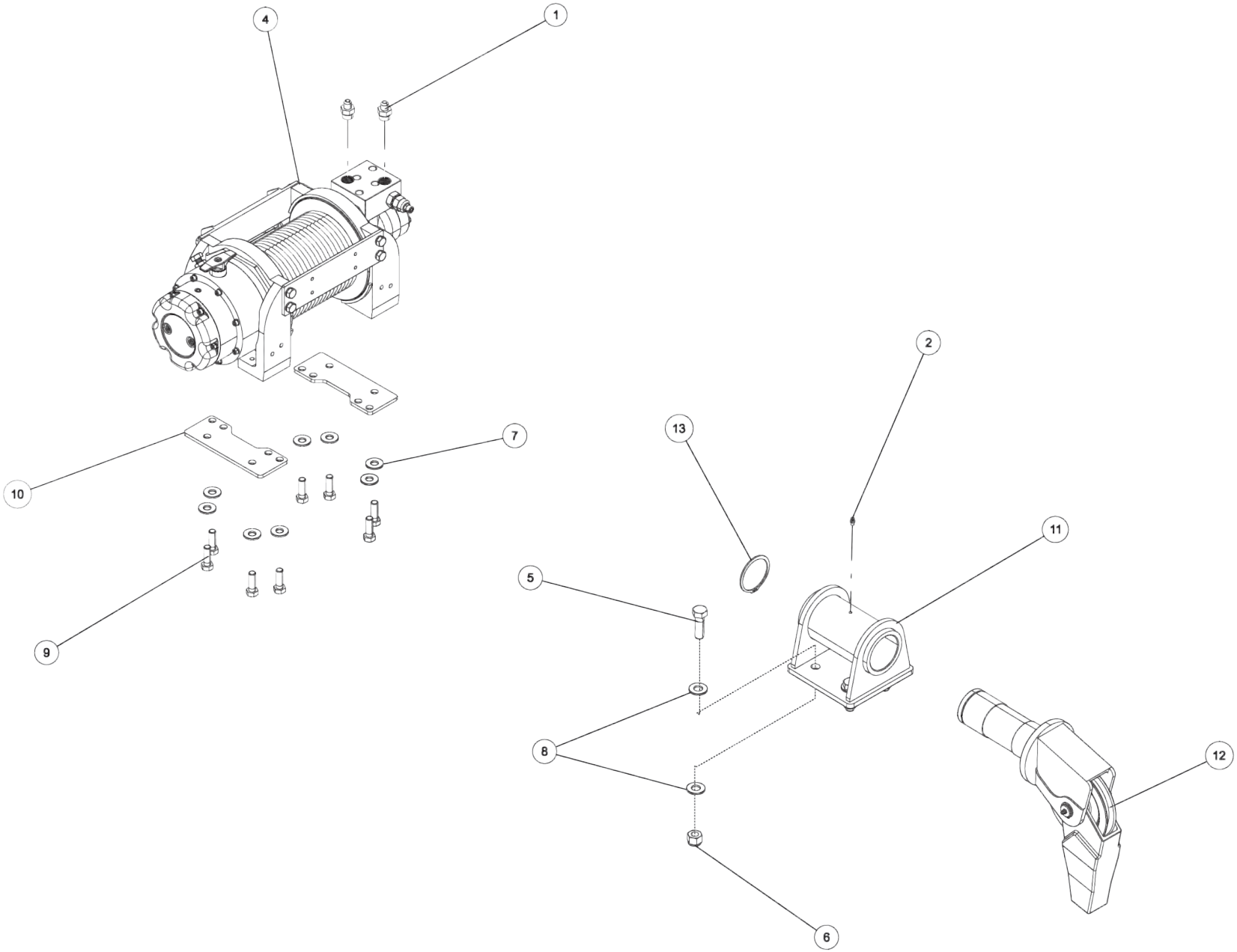

09016849, DRAG WINCH KIT - 600R KB (cont'd)

ITEM	PART NUMBER	DESCRIPTION	QTY
1	0300044	FITT, HYD CONN. 6MJ-8MB	2
2	0300113	GREASE FITTING, 1/4-28 STR	1
3	03014143	AIR CLUTCH, COMEUP FOR 0310777	1
4	0310777	WINCH, 8000SP2 W/TENSIONER	1
5	0400274	SCREW, 5/8-11X2 HHC GR8	4
6	0400426	NUT, 5/8-11 LOK GR8	4
7	0400497	WASHER, 1/2 GR8	8
8	0400503	WASHER, 5/8 GR8	8
9	0400633	SCREW, 1/2-13X1-1/2 HHC GR8	8
10	0723174	PLT, WINCH SPACER 440/810	2
11	0806844	SGL SHEAVE HEAD WELDMENT	1
12	805180000	SHEAVE HOUSING ASSEMBLY	1
13	9055275	SNAP RING EXT.2 3/4" 5160-275	1

09017890, 600R KNEE BOOM BASIC UNIT ASSEMBLY

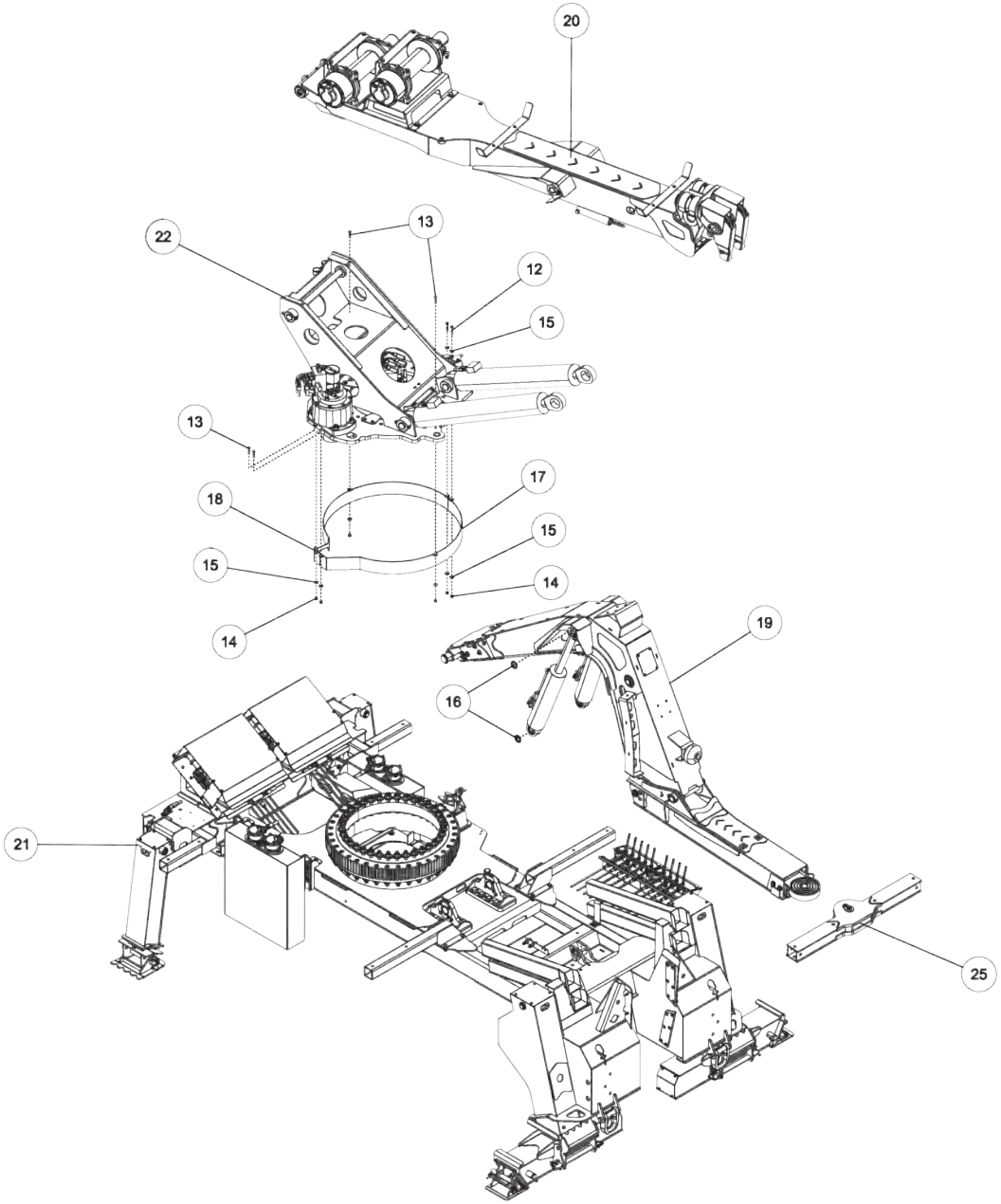

09017890, 600R KNEE BOOM BASIC UNIT ASSEMBLY (cont'd)

ITEM	PART NUMBER	DESCRIPTION	QTY
1	03006545	HOSE, 58 6FJX-6M3K-8FJX	2
2	0301113	HOSE HYD, 82"	2
3	0301370	HOSE HYD LIFT CYL 1040-B	1
4	0301529	HOSE HYD, 58	1
5	0302000	HOSE HYD, 24"	4
6	03021206	HOSE HYD 82 8FJX-8M3K-8FJX90S	6
7	03021644	HOSE HYD 82 8FJX-6M3K-6FJX90S	4
8	03021646	HOSE HYD 122 6FJX-6M3K-6FJX90S	2
9	03021647	HYDH 110 6FJX-6M3K-6FJX90S	4
10	0303036	8 FJ CAP	1
11	0311644	HOSE - 80" LG	1
12	0400146	SCREW, 3/8-16X2-1/4 HHC GR5	2
13	0400157	SCREW, 3/8-16X1-3/4 HHC GR5	4
14	0400392	NUT, 3/8-16 LOK	6
15	0400480	WASHER, 3/8	8
16	07025024	SHIM, 600R KB LIFT CYL	8
17	08015074	FRONT SLEW SHEILD WLMT CW	1
18	08015075	REAR SLEW SHEILD WLMT CW	1
19	09012010	600R NO-WINCH KNEEBOOM ASSY	1
20	09017249	RECOVERY BOOM ASSY - 600R	1
21	09017869	SUBFRAME ASSY - 600R KB	1
22	09017889	WRECKER FRAME ASSY - 600R	1
23	0910320	CROSSTUBE, LH PIVOT ASSY-FABR	1
24	0910321	CROSSTUBE, RH PIVOT ASSY-FABR	1
25	3014-960000	CROSSBAR ASSEMBLY 3014	1

09017890, 600R KNEE BOOM BASIC UNIT ASSEMBLY (cont'd)

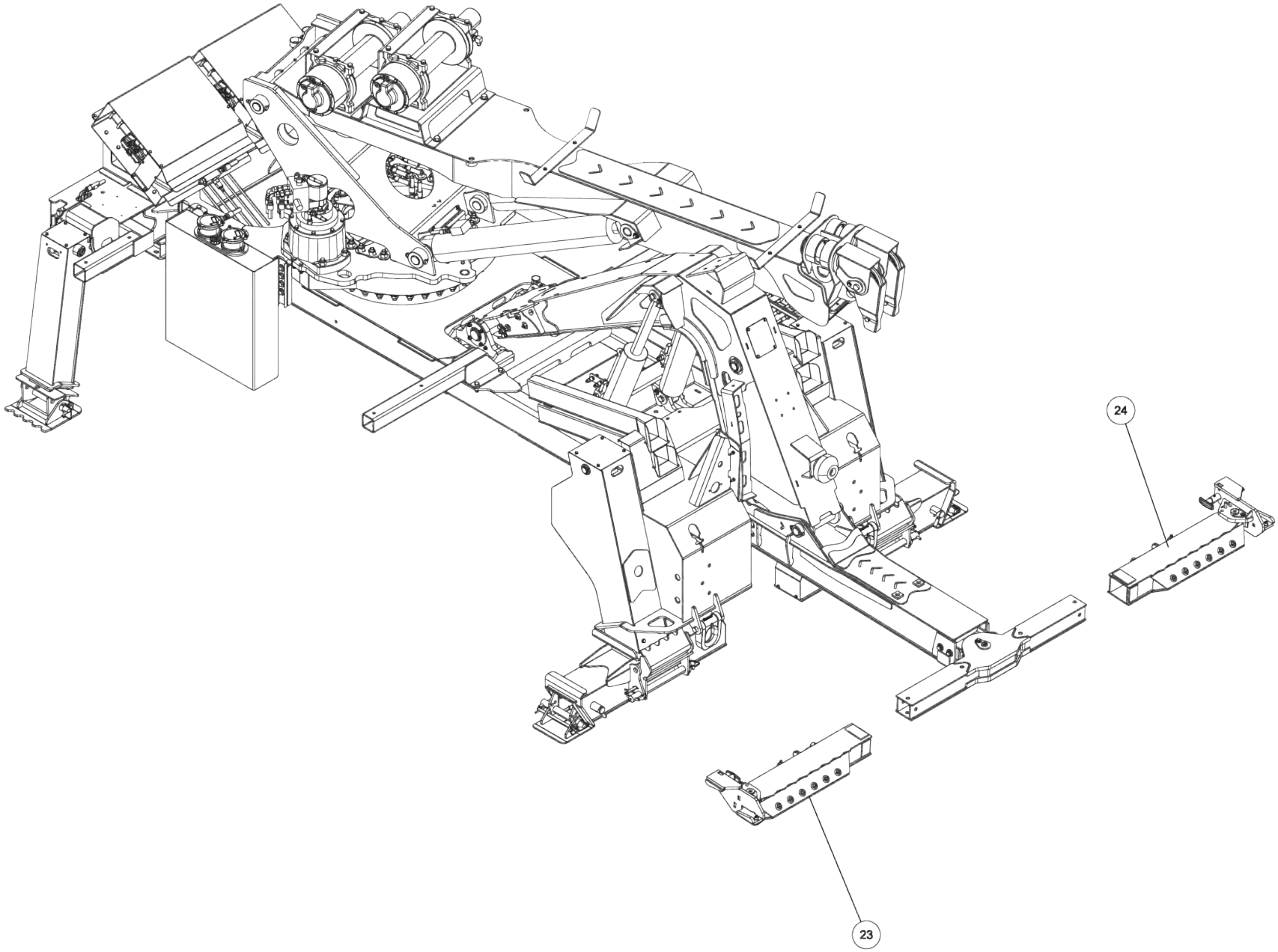

09017890, 600R KNEE BOOM BASIC UNIT ASSEMBLY (cont'd)

ITEM	PART NUMBER	DESCRIPTION	QTY
1	03006545	HOSE, 58 6FJX-6M3K-8FJX	2
2	0301113	HOSE HYD, 82"	2
3	0301370	HOSE HYD LIFT CYL 1040-B	1
4	0301529	HOSE HYD, 58	1
5	0302000	HOSE HYD, 24"	4
6	03021206	HOSE HYD 82 8FJX-8M3K-8FJX90S	6
7	03021644	HOSE HYD 82 8FJX-6M3K-6FJX90S	4
8	03021646	HOSE HYD 122 6FJX-6M3K-6FJX90S	2
9	03021647	HYDH 110 6FJX-6M3K-6FJX90S	4
10	0303036	8 FJ CAP	1
11	0311644	HOSE - 80" LG	1
12	0400146	SCREW, 3/8-16X2-1/4 HHC GR5	2
13	0400157	SCREW, 3/8-16X1-3/4 HHC GR5	4
14	0400392	NUT, 3/8-16 LOK	6
15	0400480	WASHER, 3/8	8
16	07025024	SHIM, 600R KB LIFT CYL	8
17	08015074	FRONT SLEW SHEILD WLMT CW	1
18	08015075	REAR SLEW SHEILD WLMT CW	1
19	09012010	600R NO-WINCH KNEEBOOM ASSY	1
20	09017249	RECOVERY BOOM ASSY - 600R	1
21	09017869	SUBFRAME ASSY - 600R KB	1
22	09017889	WRECKER FRAME ASSY - 600R	1
23	0910320	CROSSTUBE, LH PIVOT ASSY-FABR	1
24	0910321	CROSSTUBE, RH PIVOT ASSY-FABR	1
25	3014-960000	CROSSBAR ASSEMBLY 3014	1

09017890, 600R KNEE BOOM BASIC UNIT ASSEMBLY (cont'd)

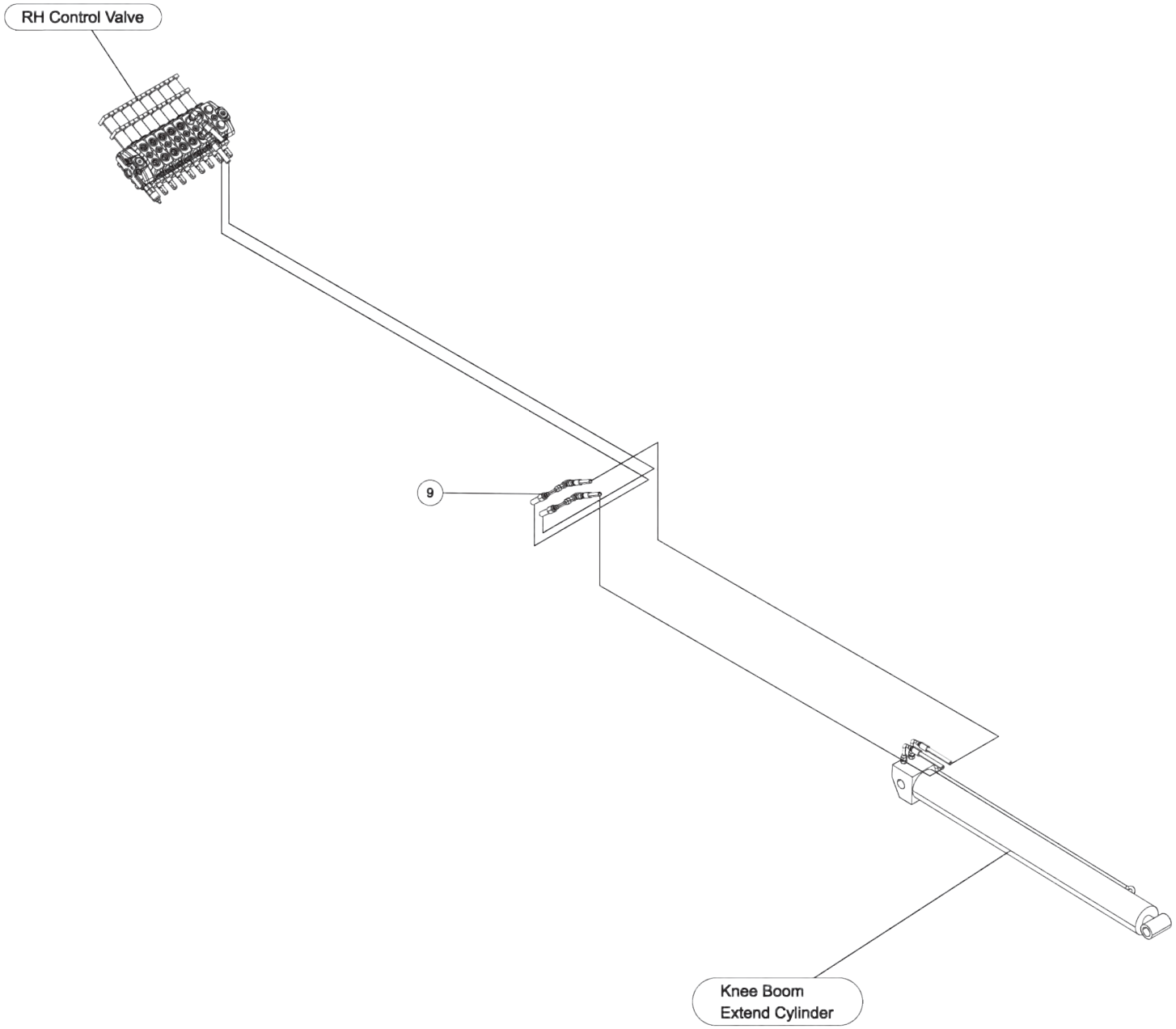

09017890, 600R KNEE BOOM BASIC UNIT ASSEMBLY (cont'd)

ITEM	PART NUMBER	DESCRIPTION	QTY
1	03006545	HOSE, 58 6FJX-6M3K-8FJX	2
2	0301113	HOSE HYD, 82"	2
3	0301370	HOSE HYD LIFT CYL 1040-B	1
4	0301529	HOSE HYD, 58	1
5	0302000	HOSE HYD, 24"	4
6	03021206	HOSE HYD 82 8FJX-8M3K-8FJX90S	6
7	03021644	HOSE HYD 82 8FJX-6M3K-6FJX90S	4
8	03021646	HOSE HYD 122 6FJX-6M3K-6FJX90S	2
9	03021647	HYDH 110 6FJX-6M3K-6FJX90S	4
10	0303036	8 FJ CAP	1
11	0311644	HOSE - 80" LG	1
12	0400146	SCREW, 3/8-16X2-1/4 HHC GR5	2
13	0400157	SCREW, 3/8-16X1-3/4 HHC GR5	4
14	0400392	NUT, 3/8-16 LOK	6
15	0400480	WASHER, 3/8	8
16	07025024	SHIM, 600R KB LIFT CYL	8
17	08015074	FRONT SLEW SHEILD WLMT CW	1
18	08015075	REAR SLEW SHEILD WLMT CW	1
19	09012010	600R NO-WINCH KNEEBOOM ASSY	1
20	09017249	RECOVERY BOOM ASSY - 600R	1
21	09017869	SUBFRAME ASSY - 600R KB	1
22	09017889	WRECKER FRAME ASSY - 600R	1
23	0910320	CROSSTUBE, LH PIVOT ASSY-FABR	1
24	0910321	CROSSTUBE, RH PIVOT ASSY-FABR	1
25	3014-960000	CROSSBAR ASSEMBLY 3014	1

09017890, 600R KNEE BOOM BASIC UNIT ASSEMBLY (cont'd)

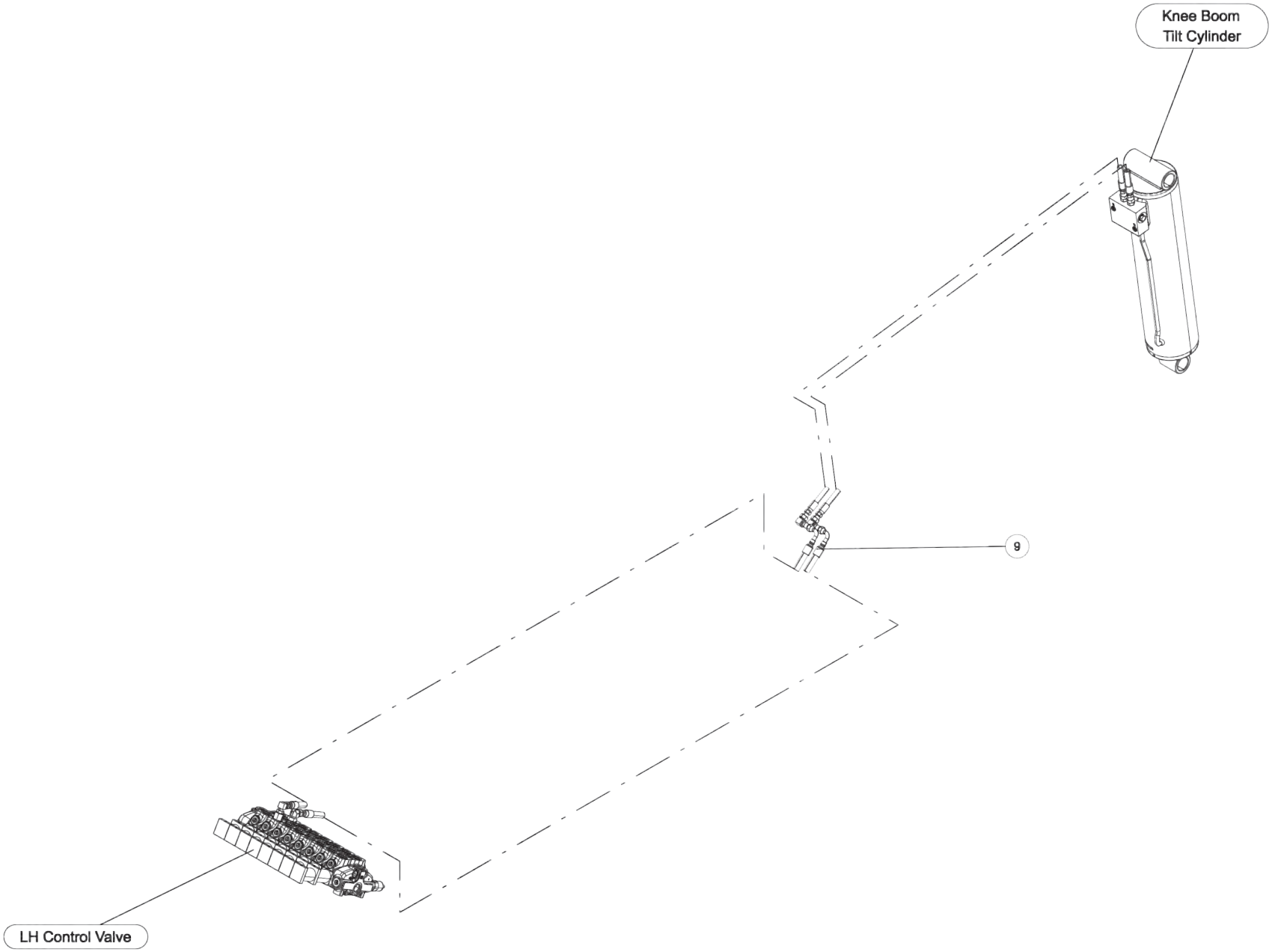

09017890, 600R KNEE BOOM BASIC UNIT ASSEMBLY (cont'd)

ITEM	PART NUMBER	DESCRIPTION	QTY
1	03006545	HOSE, 58 6FJX-6M3K-8FJX	2
2	0301113	HOSE HYD, 82"	2
3	0301370	HOSE HYD LIFT CYL 1040-B	1
4	0301529	HOSE HYD, 58	1
5	0302000	HOSE HYD, 24"	4
6	03021206	HOSE HYD 82 8FJX-8M3K-8FJX90S	6
7	03021644	HOSE HYD 82 8FJX-6M3K-6FJX90S	4
8	03021646	HOSE HYD 122 6FJX-6M3K-6FJX90S	2
9	03021647	HYDH 110 6FJX-6M3K-6FJX90S	4
10	0303036	8 FJ CAP	1
11	0311644	HOSE - 80" LG	1
12	0400146	SCREW, 3/8-16X2-1/4 HHC GR5	2
13	0400157	SCREW, 3/8-16X1-3/4 HHC GR5	4
14	0400392	NUT, 3/8-16 LOK	6
15	0400480	WASHER, 3/8	8
16	07025024	SHIM, 600R KB LIFT CYL	8
17	08015074	FRONT SLEW SHEILD WLMT CW	1
18	08015075	REAR SLEW SHEILD WLMT CW	1
19	09012010	600R NO-WINCH KNEEBOOM ASSY	1
20	09017249	RECOVERY BOOM ASSY - 600R	1
21	09017869	SUBFRAME ASSY - 600R KB	1
22	09017889	WRECKER FRAME ASSY - 600R	1
23	0910320	CROSSTUBE, LH PIVOT ASSY-FABR	1
24	0910321	CROSSTUBE, RH PIVOT ASSY-FABR	1
25	3014-960000	CROSSBAR ASSEMBLY 3014	1

09017890, 600R KNEE BOOM BASIC UNIT ASSEMBLY (cont'd)

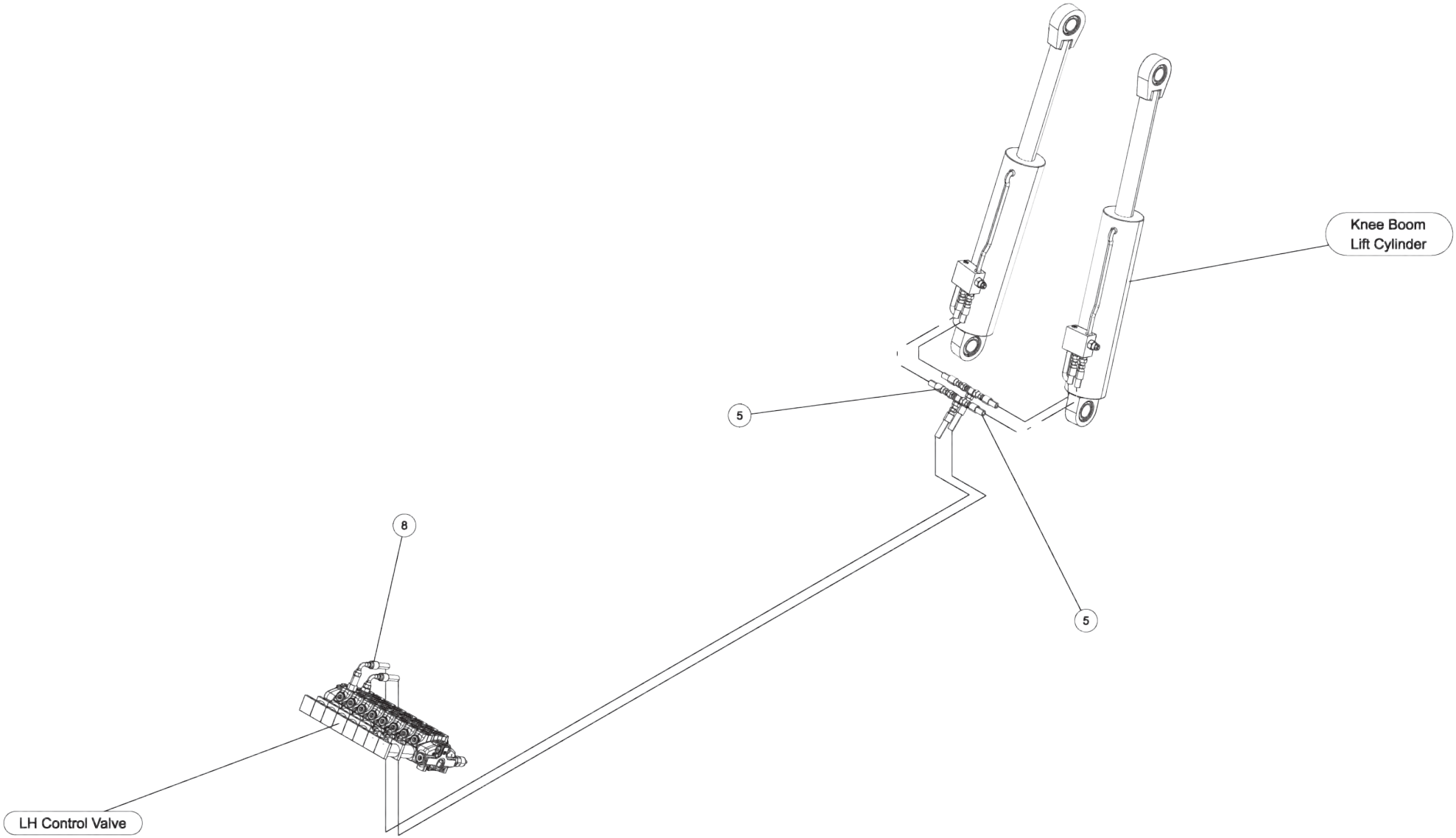

09017890, 600R KNEE BOOM BASIC UNIT ASSEMBLY (cont'd)

ITEM	PART NUMBER	DESCRIPTION	QTY
1	03006545	HOSE, 58 6FJX-6M3K-8FJX	2
2	0301113	HOSE HYD, 82"	2
3	0301370	HOSE HYD LIFT CYL 1040-B	1
4	0301529	HOSE HYD, 58	1
5	0302000	HOSE HYD, 24"	4
6	03021206	HOSE HYD 82 8FJX-8M3K-8FJX90S	6
7	03021644	HOSE HYD 82 8FJX-6M3K-6FJX90S	4
8	03021646	HOSE HYD 122 6FJX-6M3K-6FJX90S	2
9	03021647	HYDH 110 6FJX-6M3K-6FJX90S	4
10	0303036	8 FJ CAP	1
11	0311644	HOSE - 80" LG	1
12	0400146	SCREW, 3/8-16X2-1/4 HHC GR5	2
13	0400157	SCREW, 3/8-16X1-3/4 HHC GR5	4
14	0400392	NUT, 3/8-16 LOK	6
15	0400480	WASHER, 3/8	8
16	07025024	SHIM, 600R KB LIFT CYL	8
17	08015074	FRONT SLEW SHEILD WLMT CW	1
18	08015075	REAR SLEW SHEILD WLMT CW	1
19	09012010	600R NO-WINCH KNEEBOOM ASSY	1
20	09017249	RECOVERY BOOM ASSY - 600R	1
21	09017869	SUBFRAME ASSY - 600R KB	1
22	09017889	WRECKER FRAME ASSY - 600R	1
23	0910320	CROSSTUBE, LH PIVOT ASSY-FABR	1
24	0910321	CROSSTUBE, RH PIVOT ASSY-FABR	1
25	3014-960000	CROSSBAR ASSEMBLY 3014	1

09017890, 600R KNEE BOOM BASIC UNIT ASSEMBLY (cont'd)

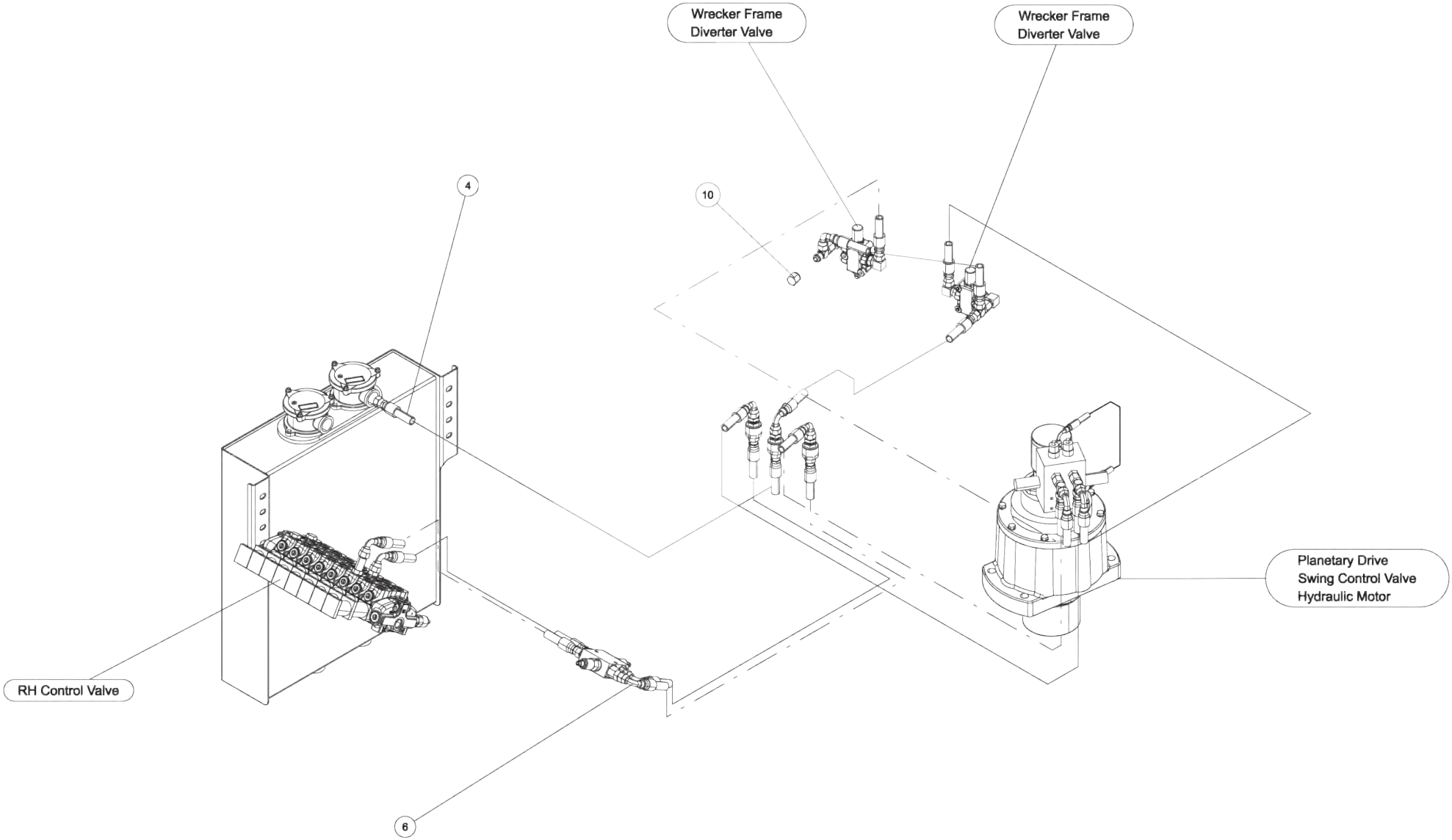

09017890, 600R KNEE BOOM BASIC UNIT ASSEMBLY (cont'd)

ITEM	PART NUMBER	DESCRIPTION	QTY
1	03006545	HOSE, 58 6FJX-6M3K-8FJX	2
2	0301113	HOSE HYD, 82"	2
3	0301370	HOSE HYD LIFT CYL 1040-B	1
4	0301529	HOSE HYD, 58	1
5	0302000	HOSE HYD, 24"	4
6	03021206	HOSE HYD 82 8FJX-8M3K-8FJX90S	6
7	03021644	HOSE HYD 82 8FJX-6M3K-6FJX90S	4
8	03021646	HOSE HYD 122 6FJX-6M3K-6FJX90S	2
9	03021647	HYDH 110 6FJX-6M3K-6FJX90S	4
10	0303036	8 FJ CAP	1
11	0311644	HOSE - 80" LG	1
12	0400146	SCREW, 3/8-16X2-1/4 HHC GR5	2
13	0400157	SCREW, 3/8-16X1-3/4 HHC GR5	4
14	0400392	NUT, 3/8-16 LOK	6
15	0400480	WASHER, 3/8	8
16	07025024	SHIM, 600R KB LIFT CYL	8
17	08015074	FRONT SLEW SHEILD WLMT CW	1
18	08015075	REAR SLEW SHEILD WLMT CW	1
19	09012010	600R NO-WINCH KNEEBOOM ASSY	1
20	09017249	RECOVERY BOOM ASSY - 600R	1
21	09017869	SUBFRAME ASSY - 600R KB	1
22	09017889	WRECKER FRAME ASSY - 600R	1
23	0910320	CROSSTUBE, LH PIVOT ASSY-FABR	1
24	0910321	CROSSTUBE, RH PIVOT ASSY-FABR	1
25	3014-960000	CROSSBAR ASSEMBLY 3014	1

09017890, 600R KNEE BOOM BASIC UNIT ASSEMBLY (cont'd)

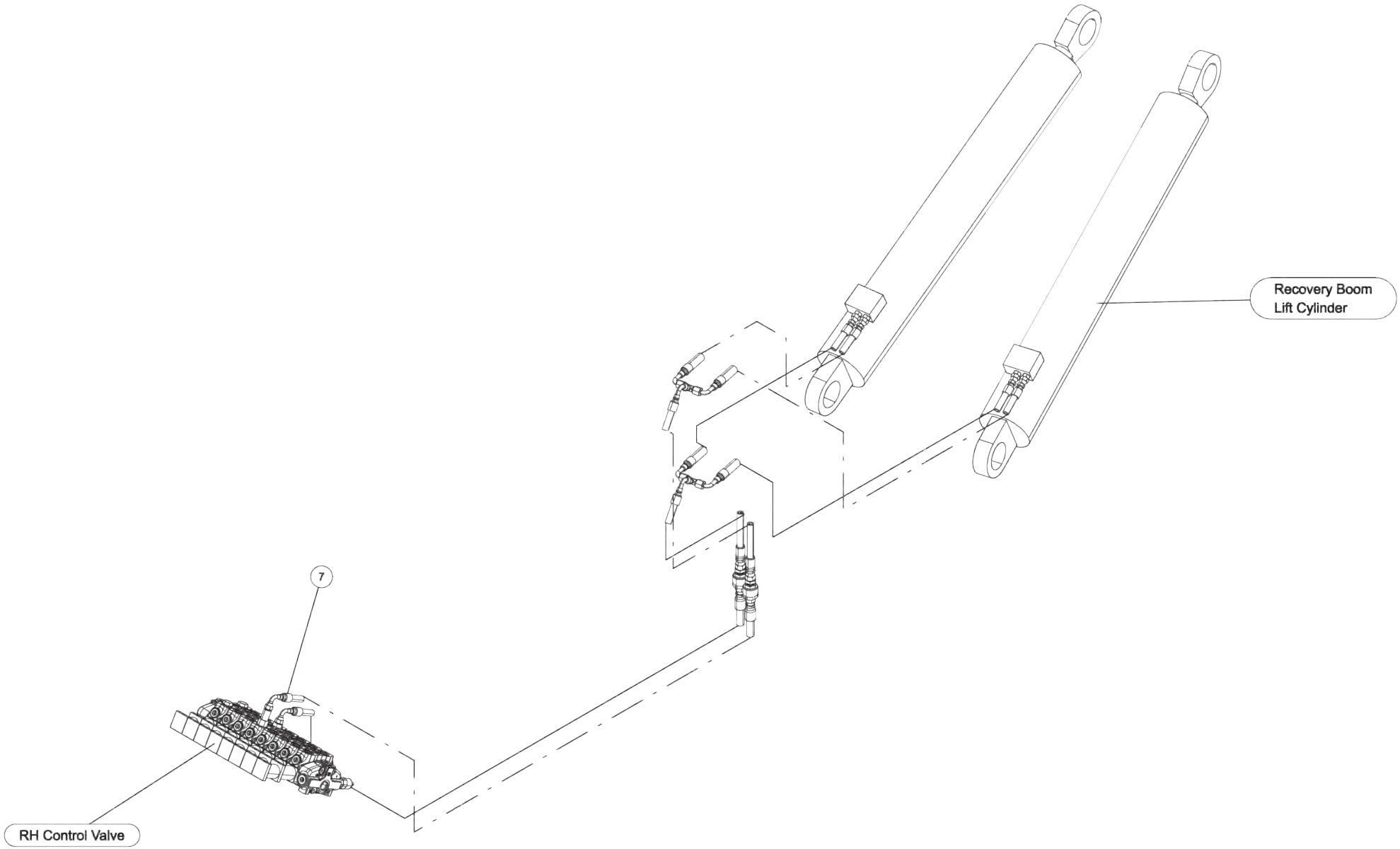

09017890, 600R KNEE BOOM BASIC UNIT ASSEMBLY (cont'd)

ITEM	PART NUMBER	DESCRIPTION	QTY
1	03006545	HOSE, 58 6FJX-6M3K-8FJX	2
2	0301113	HOSE HYD, 82"	2
3	0301370	HOSE HYD LIFT CYL 1040-B	1
4	0301529	HOSE HYD, 58	1
5	0302000	HOSE HYD, 24"	4
6	03021206	HOSE HYD 82 8FJX-8M3K-8FJX90S	6
7	03021644	HOSE HYD 82 8FJX-6M3K-6FJX90S	4
8	03021646	HOSE HYD 122 6FJX-6M3K-6FJX90S	2
9	03021647	HYDH 110 6FJX-6M3K-6FJX90S	4
10	0303036	8 FJ CAP	1
11	0311644	HOSE - 80" LG	1
12	0400146	SCREW, 3/8-16X2-1/4 HHC GR5	2
13	0400157	SCREW, 3/8-16X1-3/4 HHC GR5	4
14	0400392	NUT, 3/8-16 LOK	6
15	0400480	WASHER, 3/8	8
16	07025024	SHIM, 600R KB LIFT CYL	8
17	08015074	FRONT SLEW SHEILD WLMT CW	1
18	08015075	REAR SLEW SHEILD WLMT CW	1
19	09012010	600R NO-WINCH KNEEBOOM ASSY	1
20	09017249	RECOVERY BOOM ASSY - 600R	1
21	09017869	SUBFRAME ASSY - 600R KB	1
22	09017889	WRECKER FRAME ASSY - 600R	1
23	0910320	CROSSTUBE, LH PIVOT ASSY-FABR	1
24	0910321	CROSSTUBE, RH PIVOT ASSY-FABR	1
25	3014-960000	CROSSBAR ASSEMBLY 3014	1

09017890, 600R KNEE BOOM BASIC UNIT ASSEMBLY (cont'd)

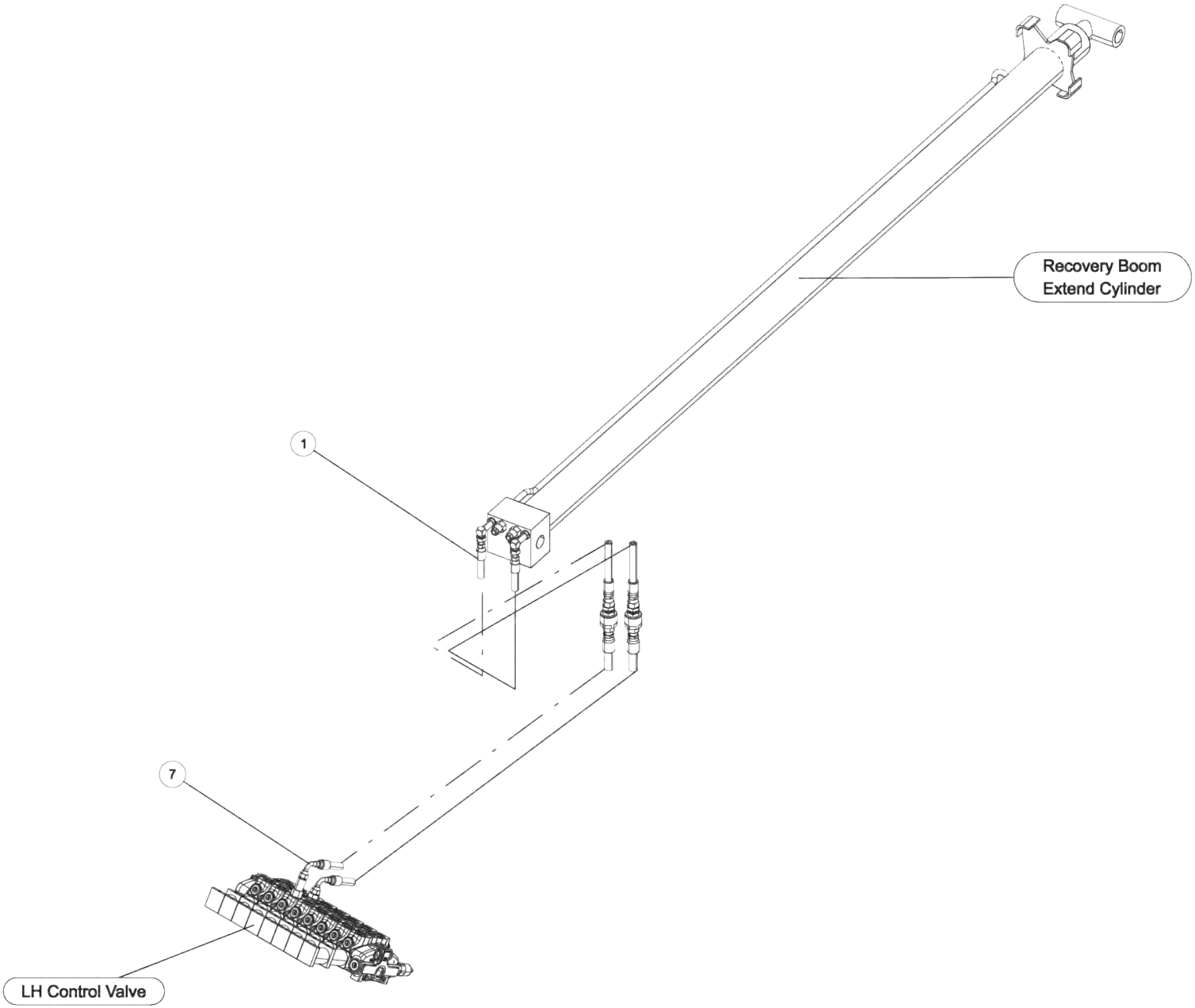

09017890, 600R KNEE BOOM BASIC UNIT ASSEMBLY (cont'd)

ITEM	PART NUMBER	DESCRIPTION	QTY
1	03006545	HOSE, 58 6FJX-6M3K-8FJX	2
2	0301113	HOSE HYD, 82"	2
3	0301370	HOSE HYD LIFT CYL 1040-B	1
4	0301529	HOSE HYD, 58	1
5	0302000	HOSE HYD, 24"	4
6	03021206	HOSE HYD 82 8FJX-8M3K-8FJX90S	6
7	03021644	HOSE HYD 82 8FJX-6M3K-6FJX90S	4
8	03021646	HOSE HYD 122 6FJX-6M3K-6FJX90S	2
9	03021647	HYDH 110 6FJX-6M3K-6FJX90S	4
10	0303036	8 FJ CAP	1
11	0311644	HOSE - 80" LG	1
12	0400146	SCREW, 3/8-16X2-1/4 HHC GR5	2
13	0400157	SCREW, 3/8-16X1-3/4 HHC GR5	4
14	0400392	NUT, 3/8-16 LOK	6
15	0400480	WASHER, 3/8	8
16	07025024	SHIM, 600R KB LIFT CYL	8
17	08015074	FRONT SLEW SHEILD WLMT CW	1
18	08015075	REAR SLEW SHEILD WLMT CW	1
19	09012010	600R NO-WINCH KNEEBOOM ASSY	1
20	09017249	RECOVERY BOOM ASSY - 600R	1
21	09017869	SUBFRAME ASSY - 600R KB	1
22	09017889	WRECKER FRAME ASSY - 600R	1
23	0910320	CROSSTUBE, LH PIVOT ASSY-FABR	1
24	0910321	CROSSTUBE, RH PIVOT ASSY-FABR	1
25	3014-960000	CROSSBAR ASSEMBLY 3014	1

09017890, 600R KNEE BOOM BASIC UNIT ASSEMBLY (cont'd)

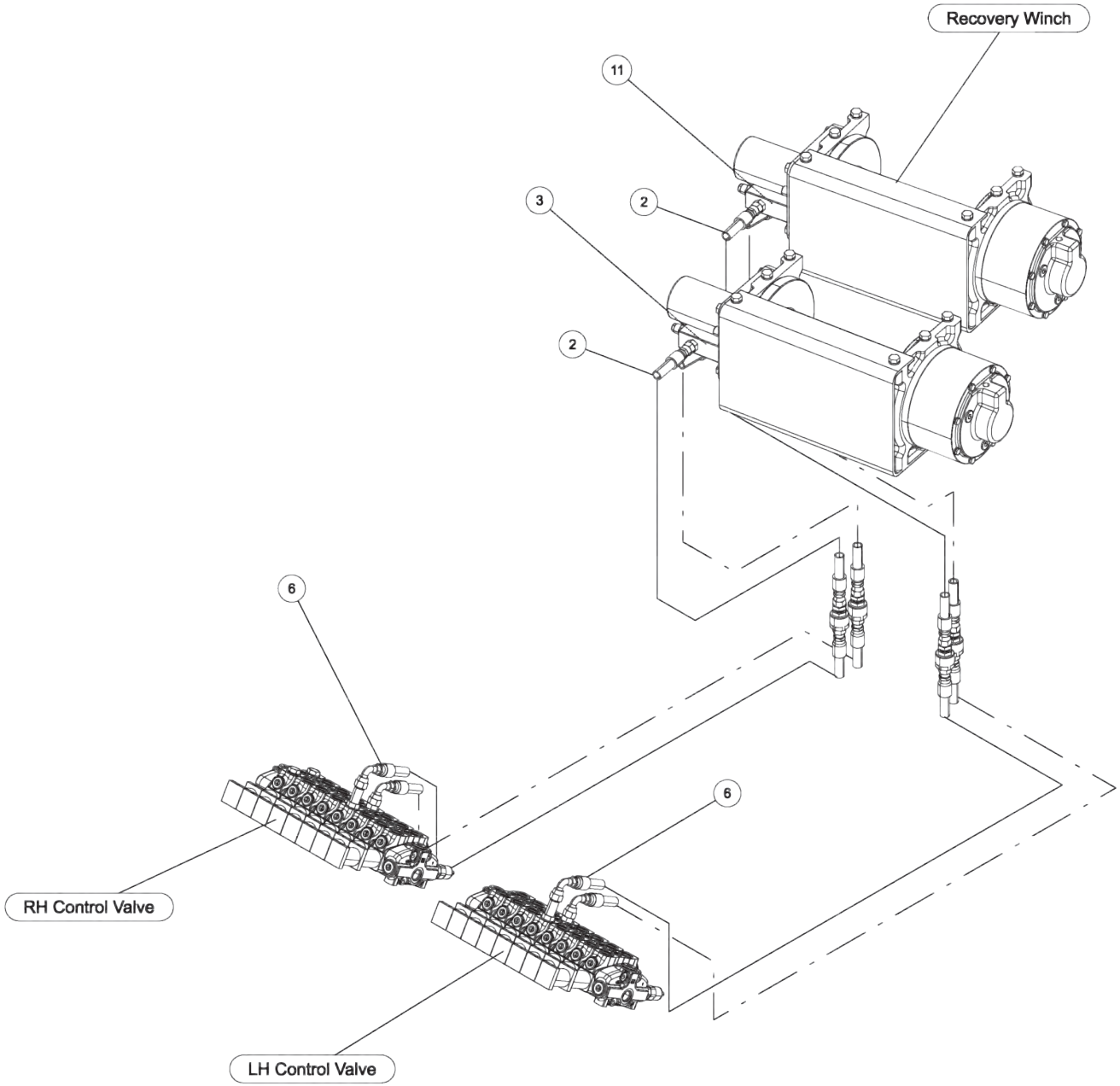

09017890, 600R KNEE BOOM BASIC UNIT ASSEMBLY (cont'd)

ITEM	PART NUMBER	DESCRIPTION	QTY
1	03006545	HOSE, 58 6FJX-6M3K-8FJX	2
2	0301113	HOSE HYD, 82"	2
3	0301370	HOSE HYD LIFT CYL 1040-B	1
4	0301529	HOSE HYD, 58	1
5	0302000	HOSE HYD, 24"	4
6	03021206	HOSE HYD 82 8FJX-8M3K-8FJX90S	6
7	03021644	HOSE HYD 82 8FJX-6M3K-6FJX90S	4
8	03021646	HOSE HYD 122 6FJX-6M3K-6FJX90S	2
9	03021647	HYDH 110 6FJX-6M3K-6FJX90S	4
10	0303036	8 FJ CAP	1
11	0311644	HOSE - 80" LG	1
12	0400146	SCREW, 3/8-16X2-1/4 HHC GR5	2
13	0400157	SCREW, 3/8-16X1-3/4 HHC GR5	4
14	0400392	NUT, 3/8-16 LOK	6
15	0400480	WASHER, 3/8	8
16	07025024	SHIM, 600R KB LIFT CYL	8
17	08015074	FRONT SLEW SHEILD WLMT CW	1
18	08015075	REAR SLEW SHEILD WLMT CW	1
19	09012010	600R NO-WINCH KNEEBOOM ASSY	1
20	09017249	RECOVERY BOOM ASSY - 600R	1
21	09017869	SUBFRAME ASSY - 600R KB	1
22	09017889	WRECKER FRAME ASSY - 600R	1
23	0910320	CROSSTUBE, LH PIVOT ASSY-FABR	1
24	0910321	CROSSTUBE, RH PIVOT ASSY-FABR	1
25	3014-960000	CROSSBAR ASSEMBLY 3014	1

09012010, 600R NO-WINCH KNEE BOOM ASSY

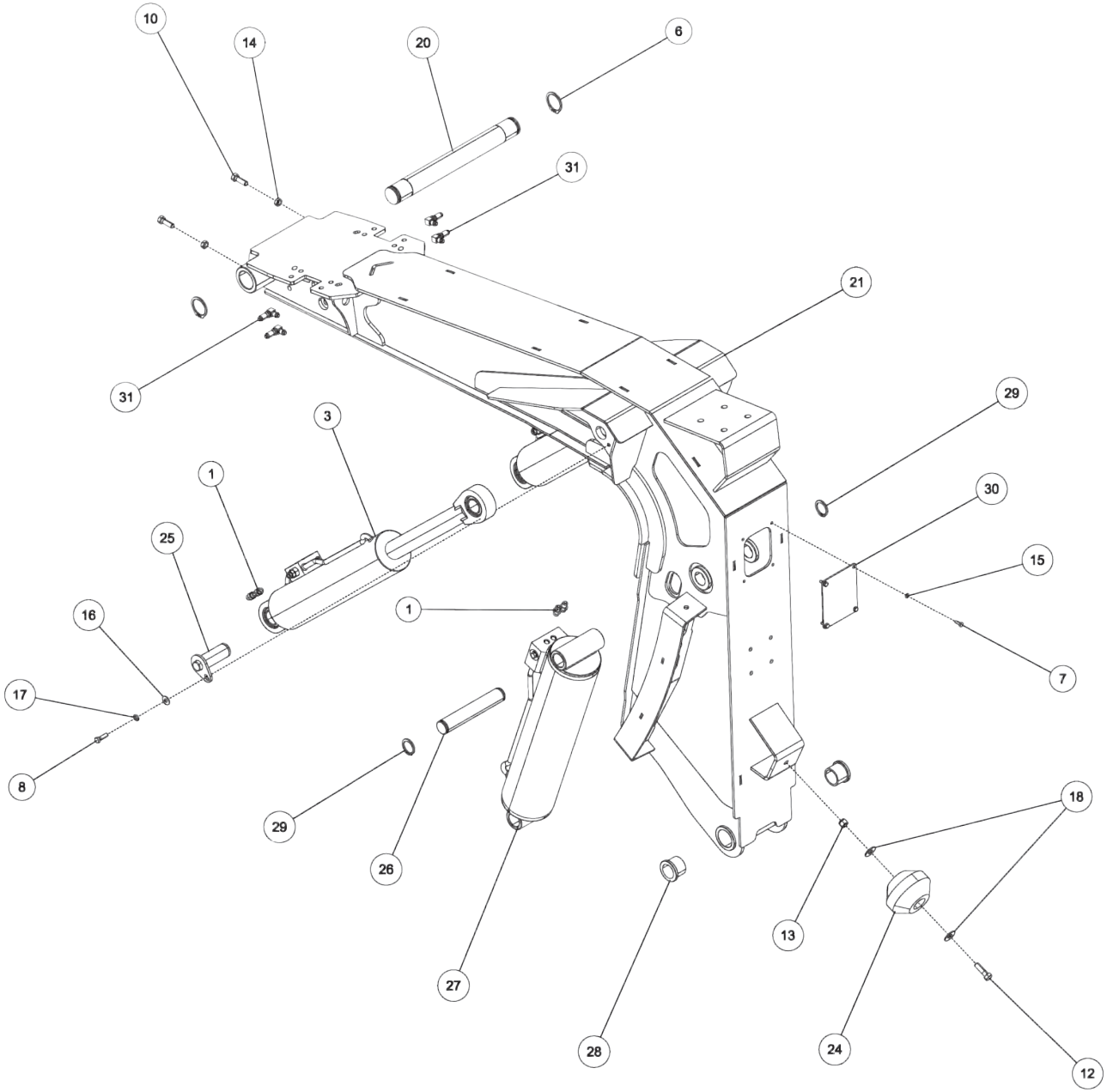

09012010, 600R NO-WINCH KNEE BOOM ASSY (cont'd)

ITEM	PART NUMBER	DESCRIPTION	QTY
1	0301522	ADAPTER, 6MJ-6MB	6
2	0301601	CLAMP, HOSE, INSUL, 5/8	4
3	03019701	CYLINDER - KNEEBOOM LIFT 600R	2
4	03021649	HOSE HYD 75 6FJX-6M3K-6FJX	2
5	03021664	HYDH 120 6FJX-4M3KMTF-6FJX90L	2
6	0302776	SNAP RING,EXTERNAL 2	2
7	0400066	SCREW, 1/4-20X3/4 HHC GR5	4
8	0400122	SCREW, 3/8-16X1-1/4 HHC GR5	2
9	0400126	SCREW, 3/8-16X1 HHC GR5	4
10	0400181	SCREW, 1/2-13X1-1/2 HHC GR5	2
11	0400185	SCREW, 1/2-13X2-1/2 HHC GR5	2
12	0400211	SCREW, 1/2-13X1-3/4 HHC GR5	1
13	0400408	NUT, 1/2-13 LOK	5
14	0400410	NUT, 1/2-13 JAM	4
15	0400452	LKWASHER, 1/4	4
16	0400480	WASHER, 3/8	6
17	0400482	LKWASHER, 3/8	2
18	0400492	USS FLAT WASHER, 1/2	4
19	0402121	LKWASHER, 3/8 SS	4
20	07015728	BOOM PIVOT PIN	1
21	08010351	600R NO-WINCH KNEEBOOM	1
22	0810517	HOOK PLATE WLDMT	1
23	09017349	U/L ASSY - 600R KNEEBOOM 10K	1
24	26113028	TIMBREN SPRING - A103B-75	1
25	3012-801000	PIN WELD'- LIFT CYL UP.& LOWER	2
26	3014-700002	PIN - FOLD (BASE)	1
27	511-5000001	CYL, HYD - STING. TILT 17.5"ST	1
28	806510001	FLANGE BEARING (ALUM. BRONZE)	2
29	9056150	RETAINING RING - 1 1/2	2
30	930290002	COVER PLATE VERT BOOM MA	1
31	FC41	FITTING-90DEG BLKHD ELB W/ NUT	4

09012010, 600R NO-WINCH KNEE BOOM ASSY (cont'd)

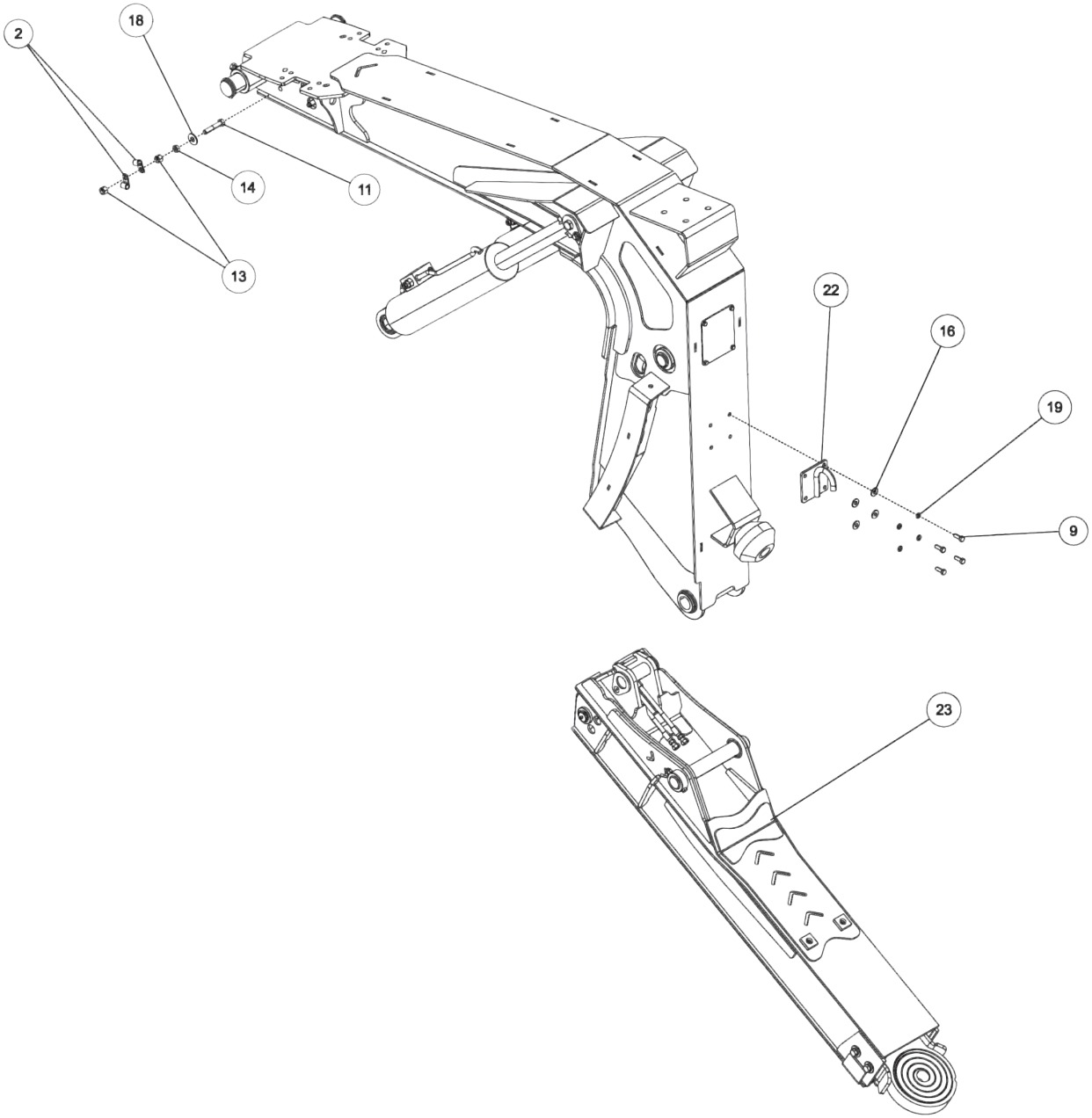

09012010, 600R NO-WINCH KNEE BOOM ASSY (cont'd)

ITEM	PART NUMBER	DESCRIPTION	QTY
1	0301522	ADAPTER, 6MJ-6MB	6
2	0301601	CLAMP, HOSE, INSUL, 5/8	4
3	03019701	CYLINDER - KNEEBOOM LIFT 600R	2
4	03021649	HOSE HYD 75 6FJX-6M3K-6FJX	2
5	03021664	HYDH 120 6FJX-4M3KMTF-6FJX90L	2
6	0302776	SNAP RING,EXTERNAL 2	2
7	0400066	SCREW, 1/4-20X3/4 HHC GR5	4
8	0400122	SCREW, 3/8-16X1-1/4 HHC GR5	2
9	0400126	SCREW, 3/8-16X1 HHC GR5	4
10	0400181	SCREW, 1/2-13X1-1/2 HHC GR5	2
11	0400185	SCREW, 1/2-13X2-1/2 HHC GR5	2
12	0400211	SCREW, 1/2-13X1-3/4 HHC GR5	1
13	0400408	NUT, 1/2-13 LOK	5
14	0400410	NUT, 1/2-13 JAM	4
15	0400452	LKWASHER, 1/4	4
16	0400480	WASHER, 3/8	6
17	0400482	LKWASHER, 3/8	2
18	0400492	USS FLAT WASHER, 1/2	4
19	0402121	LKWASHER, 3/8 SS	4
20	07015728	BOOM PIVOT PIN	1
21	08010351	600R NO-WINCH KNEEBOOM	1
22	0810517	HOOK PLATE WLDMT	1
23	09017349	U/L ASSY - 600R KNEEBOOM 10K	1
24	26113028	TIMBREN SPRING - A103B-75	1
25	3012-801000	PIN WELD'- LIFT CYL UP.& LOWER	2
26	3014-700002	PIN - FOLD (BASE)	1
27	511-5000001	CYL, HYD - STING. TILT 17.5"ST	1
28	806510001	FLANGE BEARING (ALUM. BRONZE)	2
29	9056150	RETAINING RING - 1 1/2	2
30	930290002	COVER PLATE VERT BOOM MA	1
31	FC41	FITTING-90DEG BLKHD ELB W/ NUT	4

09012010, 600R NO-WINCH KNEE BOOM ASSY (cont'd)

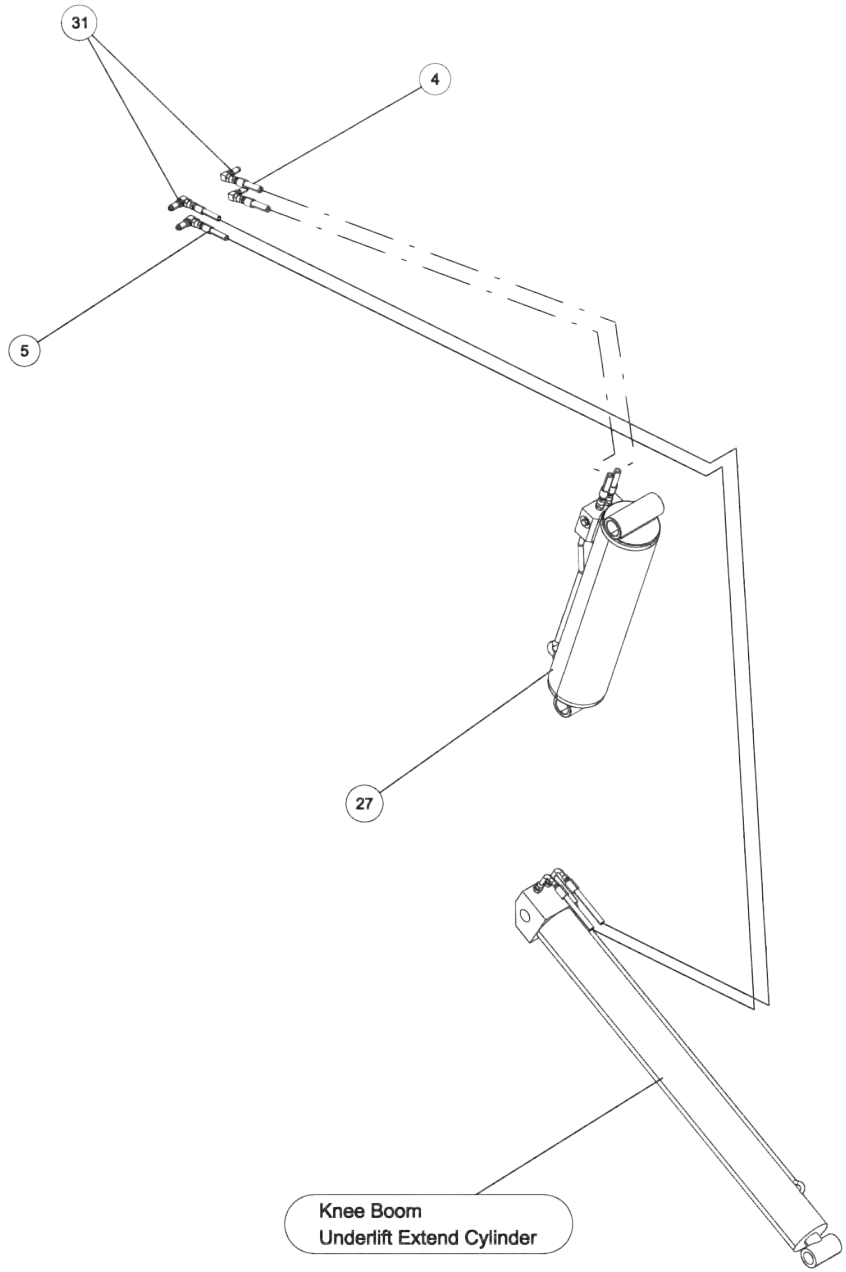

09012010, 600R NO-WINCH KNEE BOOM ASSY (cont'd)

ITEM	PART NUMBER	DESCRIPTION	QTY
1	0301522	ADAPTER, 6MJ-6MB	6
2	0301601	CLAMP, HOSE, INSUL, 5/8	4
3	03019701	CYLINDER - KNEEBOOM LIFT 600R	2
4	03021649	HOSE HYD 75 6FJX-6M3K-6FJX	2
5	03021664	HYDH 120 6FJX-4M3KMTF-6FJX90L	2
6	0302776	SNAP RING,EXTERNAL 2	2
7	0400066	SCREW, 1/4-20X3/4 HHC GR5	4
8	0400122	SCREW, 3/8-16X1-1/4 HHC GR5	2
9	0400126	SCREW, 3/8-16X1 HHC GR5	4
10	0400181	SCREW, 1/2-13X1-1/2 HHC GR5	2
11	0400185	SCREW, 1/2-13X2-1/2 HHC GR5	2
12	0400211	SCREW, 1/2-13X1-3/4 HHC GR5	1
13	0400408	NUT, 1/2-13 LOK	5
14	0400410	NUT, 1/2-13 JAM	4
15	0400452	LKWASHER, 1/4	4
16	0400480	WASHER, 3/8	6
17	0400482	LKWASHER, 3/8	2
18	0400492	USS FLAT WASHER, 1/2	4
19	0402121	LKWASHER, 3/8 SS	4
20	07015728	BOOM PIVOT PIN	1
21	08010351	600R NO-WINCH KNEEBOOM	1
22	0810517	HOOK PLATE WLDMT	1
23	09017349	U/L ASSY - 600R KNEEBOOM 10K	1
24	26113028	TIMBREN SPRING - A103B-75	1
25	3012-801000	PIN WELD'- LIFT CYL UP.& LOWER	2
26	3014-700002	PIN - FOLD (BASE)	1
27	511-5000001	CYL, HYD - STING. TILT 17.5"ST	1
28	806510001	FLANGE BEARING (ALUM. BRONZE)	2
29	9056150	RETAINING RING - 1 1/2	2
30	930290002	COVER PLATE VERT BOOM MA	1
31	FC41	FITTING-90DEG BLKHD ELB W/ NUT	4

09017349, UNDERLIFT ASSEMBLY - 600R KNEE BOOM 10K

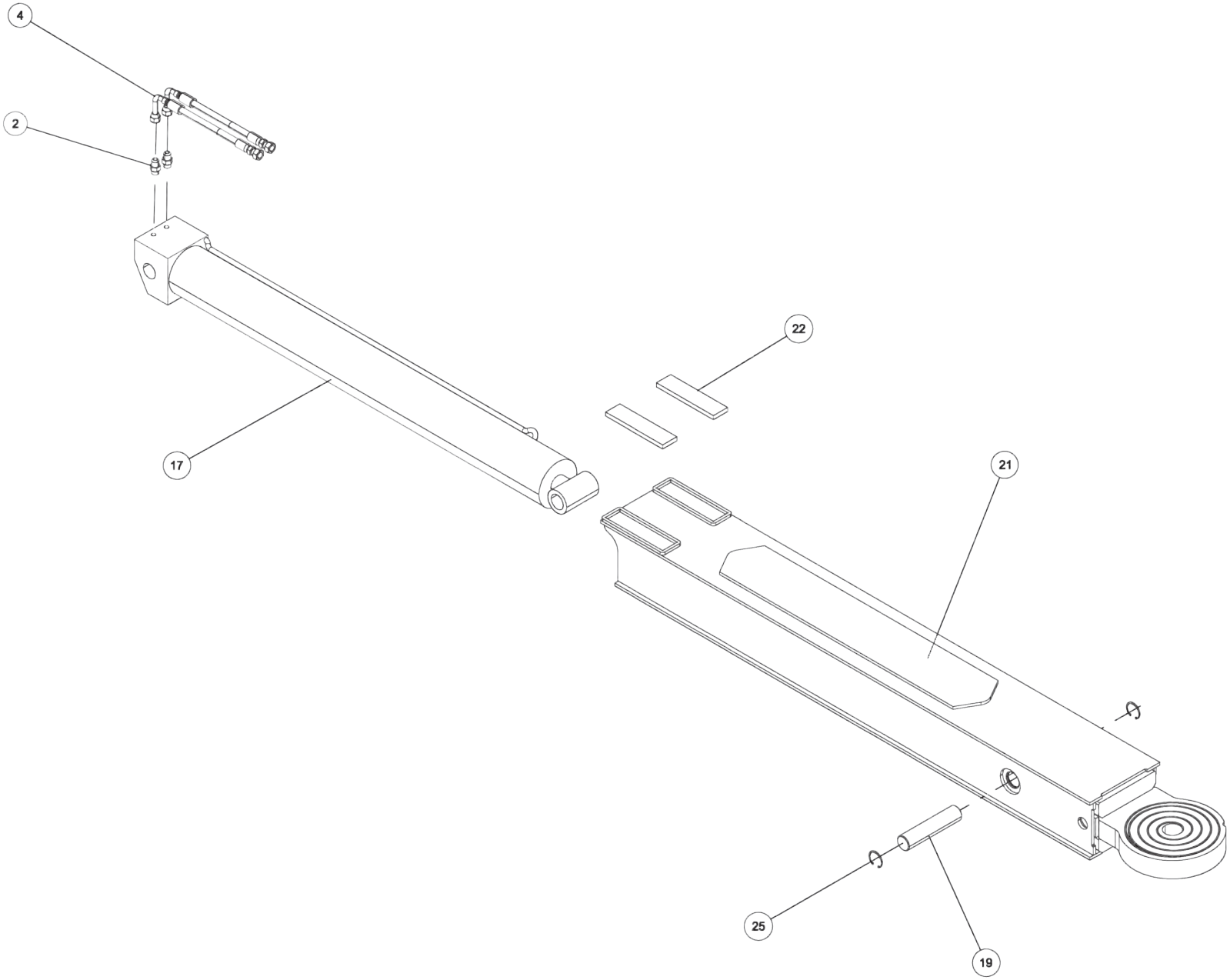

09017349, UNDERLIFT ASSEMBLY - 600R KNEE BOOM 10K (cont'd)

ITEM	PART NUMBER	DESCRIPTION	QTY
1	0300113	GREASE FITTING, 1/4-28 STR	5
2	0301522	ADAPTER, 6MJ-6MB	2
3	0301895	GREASE FITTING, 1/8 STR PTF	1
4	03021664	HYDH 120 6FJX-4M3KMTF-6FJX90L	2
5	0400121	SCREW, 3/8-16X3/4 HHC GR5	2
6	0400133	SCREW, 3/8-16X3 HHC GR5	1
7	0400218	SCREW, 1/2-20X1-1/4 HHC GR5	4
8	0400223	SCREW, 3/8-16X3/4 SHC	1
9	0400392	NUT, 3/8-16 LOK	1
10	0400482	LKWASHER, 3/8	2
11	0400491	LKWASHER, 1/2	4
12	0400492	USS FLAT WASHER, 1/2	4
13	08014990	OUTER U/L BOOM WLMT 600R KB	1
14	3012-794002	PLATE - XBAR POSITIONING	2
15	3012-794004	PLATE - U/L PAD CAGE 3014-9400	1
16	3014-801000	TILT CYLINDER PIN	1
17	30663003	CYL HYD - STING. EXT. 34" STR	1
18	30667043	PIN - FRONT BOOM EXTEND	1
19	30667044	PIN - U/L EXTEND (ROD)	1
20	30667045	PIN - STINGER	1
21	30668006	U/L INNER BOOM WLMT	1
22	896040002	NYLATRON - 6 X 1 1/2 X	4
23	9056125	1.25 NOM HVY DUTY RET RING EXT	2
24	9056150	RETAINING RING - 1 1/2	1
25	9057125	RETAINING RING, 1-1/4 INT	2

09017349, UNDERLIFT ASSEMBLY - 600R KNEE BOOM 10K (cont'd)

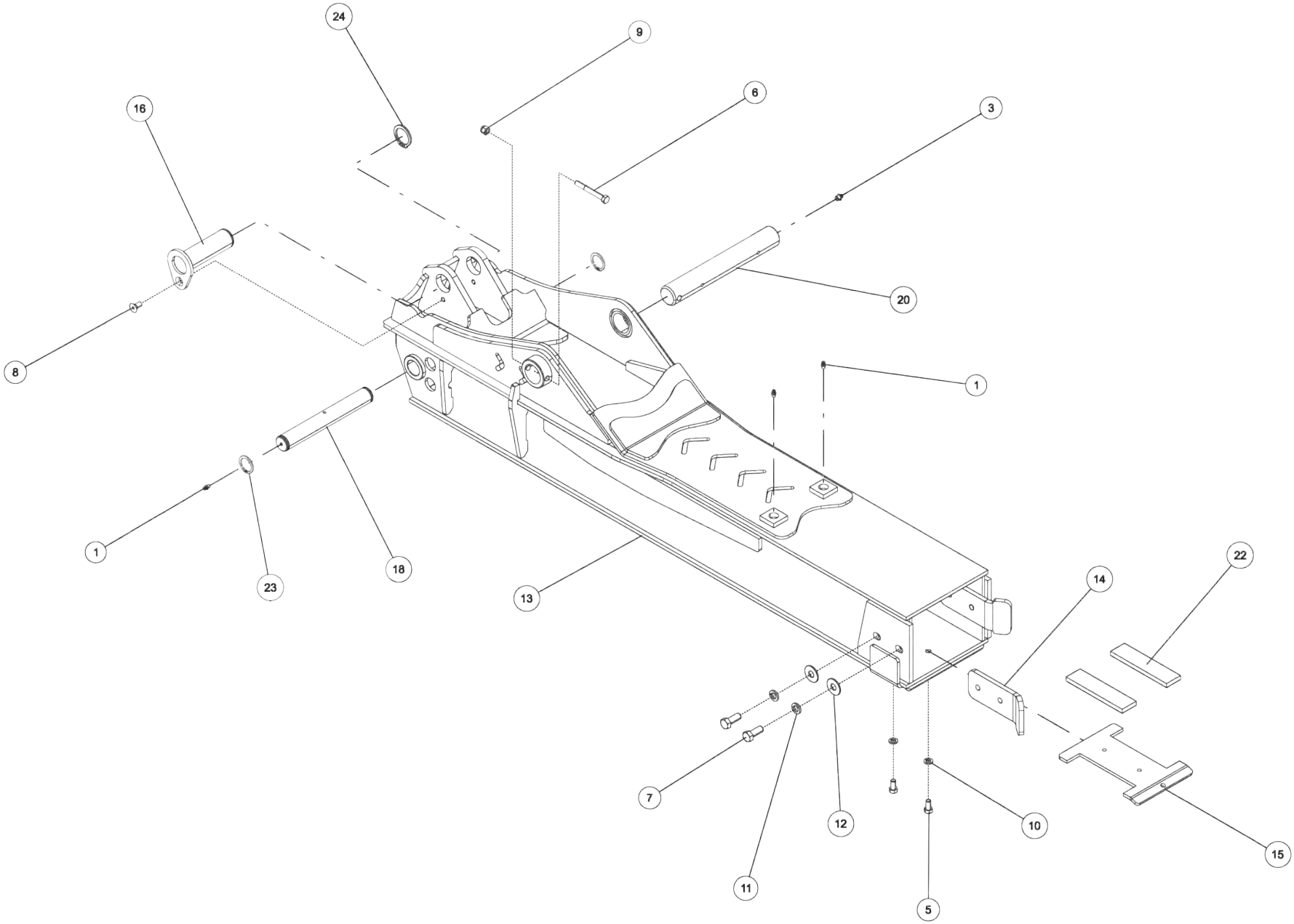

09017349, UNDERLIFT ASSEMBLY - 600R KNEE BOOM 10K (cont'd)

ITEM	PART NUMBER	DESCRIPTION	QTY
1	0300113	GREASE FITTING, 1/4-28 STR	5
2	0301522	ADAPTER, 6MJ-6MB	2
3	0301895	GREASE FITTING, 1/8 STR PTF	1
4	03021664	HYDH 120 6FJX-4M3KMTF-6FJX90L	2
5	0400121	SCREW, 3/8-16X3/4 HHC GR5	2
6	0400133	SCREW, 3/8-16X3 HHC GR5	1
7	0400218	SCREW, 1/2-20X1-1/4 HHC GR5	4
8	0400223	SCREW, 3/8-16X3/4 SHC	1
9	0400392	NUT, 3/8-16 LOK	1
10	0400482	LKWASHER, 3/8	2
11	0400491	LKWASHER, 1/2	4
12	0400492	USS FLAT WASHER, 1/2	4
13	08014990	OUTER U/L BOOM WLMT 600R KB	1
14	3012-794002	PLATE - XBAR POSITIONING	2
15	3012-794004	PLATE - U/L PAD CAGE 3014-9400	1
16	3014-801000	TILT CYLINDER PIN	1
17	30663003	CYL HYD - STING. EXT. 34" STR	1
18	30667043	PIN - FRONT BOOM EXTEND	1
19	30667044	PIN - U/L EXTEND (ROD)	1
20	30667045	PIN - STINGER	1
21	30668006	U/L INNER BOOM WLMT	1
22	896040002	NYLATRON - 6 X 1 1/2 X	4
23	9056125	1.25 NOM HVY DUTY RET RING EXT	2
24	9056150	RETAINING RING - 1 1/2	1
25	9057125	RETAINING RING, 1-1/4 INT	2

09017249, RECOVERY BOOM ASSEMBLY - 600R

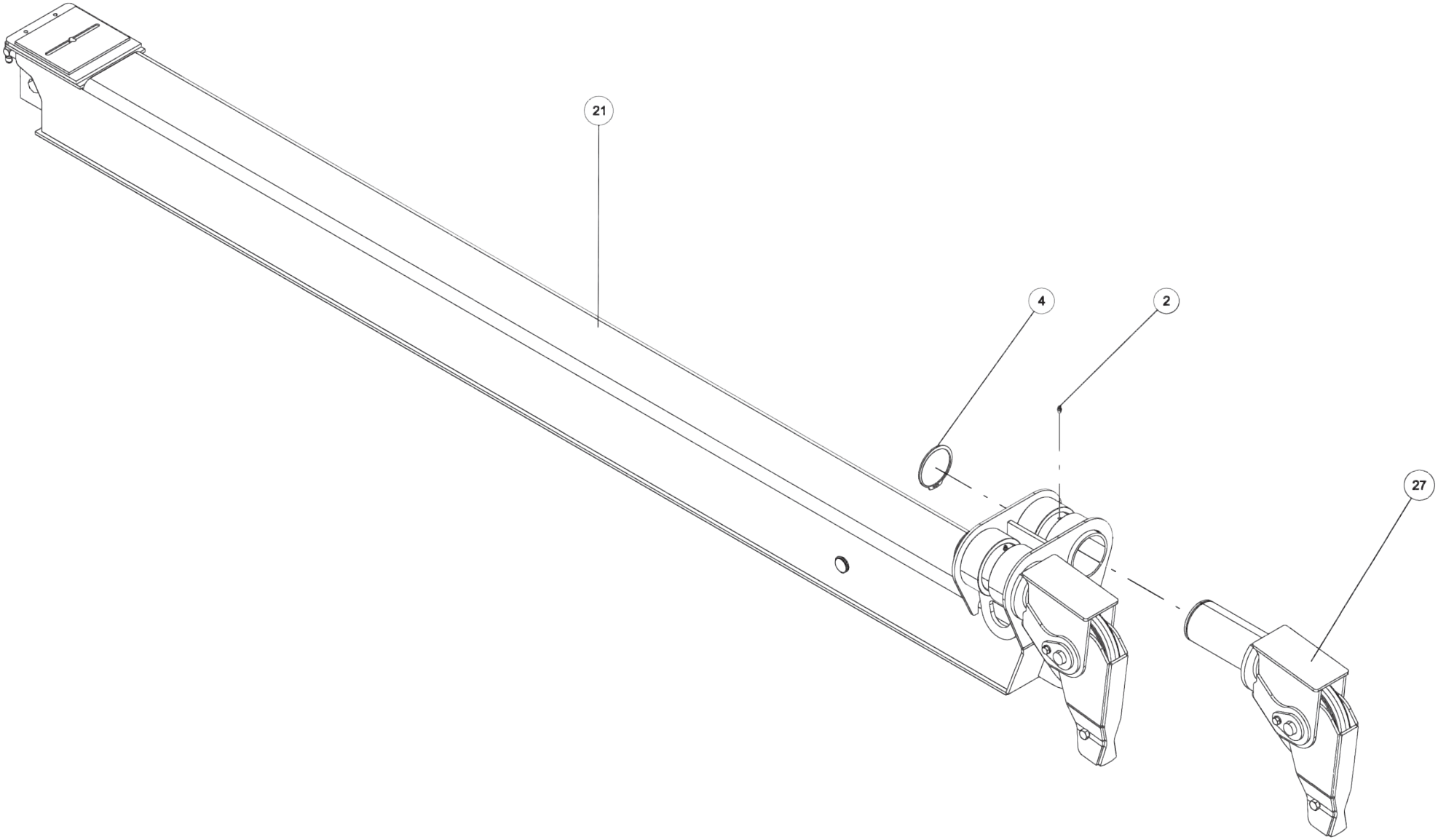

09017249, RECOVERY BOOM ASSEMBLY - 600R (cont'd)

ITEM	PART NUMBER	DESCRIPTION	QTY
1	0300041	CONNECTOR, 8MJ-8MB	2
2	0300113	GREASE FITTING, 1/4-28 STR	4
3	0301388	ELBOW, 8MJ-8MB90	2
4	0301814	RETAINING RING, 3-1/2" EXTERNAL	2
5	0301895	GREASE FITTING, 1/8 STR PTF	1
6	0302340	BUSHING HEX (BRASS) 4MP-2FP	2
7	03025694	PAD, WIRE ROPE 600R KB	1
8	0400057	SCREW, 1/4-20X1-1/4 HHC	4
9	0400126	SCREW, 3/8-16X1 HHC GR5	2
10	0400128	SCREW, 3/8-16X1-1/4 FHS GR8 BO	2
11	0400274	SCREW, 5/8-11X2 HHC GR8	4
12	0400347	SCREW, 3/8-24X7/8 HHC GR5	2
13	0400367	NUT, 1/4-20 LOK	4
14	0400426	NUT, 5/8-11 LOK GR8	4
15	0400451	WASHER, 1/4	8
16	0400480	WASHER, 3/8	2
17	0400482	LKWASHER, 3/8	4
18	0400491	LKWASHER, 1/2	12
19	0400503	WASHER, 5/8 GR8	4
20	08014895	OUTER BOOM WLMT - 600R	1
21	09021840	INNER BOOM, 600R KB	1
22	0906572	KIT-WINCH CABLE STOW	2
23	3012-792002	PLATE - PAD CAGE	1
24	3014-791001	PLATE - 14K WASHER 3014-910000	4
25	3014-792001	PLATE - CABLE WING	2
26	3014-821000	BRACKET WELD'T - 14K DP	1
27	3014-931000	SHEAVE ASSEMBLY - 3014	2
28	3116-792001	BEARING, FLNGD BM PIVOT MAIN BM	2
29	514-1501101	WINCH 15K - DP 15J ER1582	2
30	535-0500001	NYLATRON PAD	1
31	897400001	FRONT PIN	1
32	9010030	FITT, BRASS ELBOW 1/4T-1/8MPX	2
33	9041404	1/2 NC X 1 3/4 HHCS PL GR8	12
34	9056125	1.25 NOM HVY DUTY RET RING EXT	2
35	915352000	PIN WELD'T UPPER/LOWER L	2

09017249, RECOVERY BOOM ASSEMBLY - 600R (cont'd)

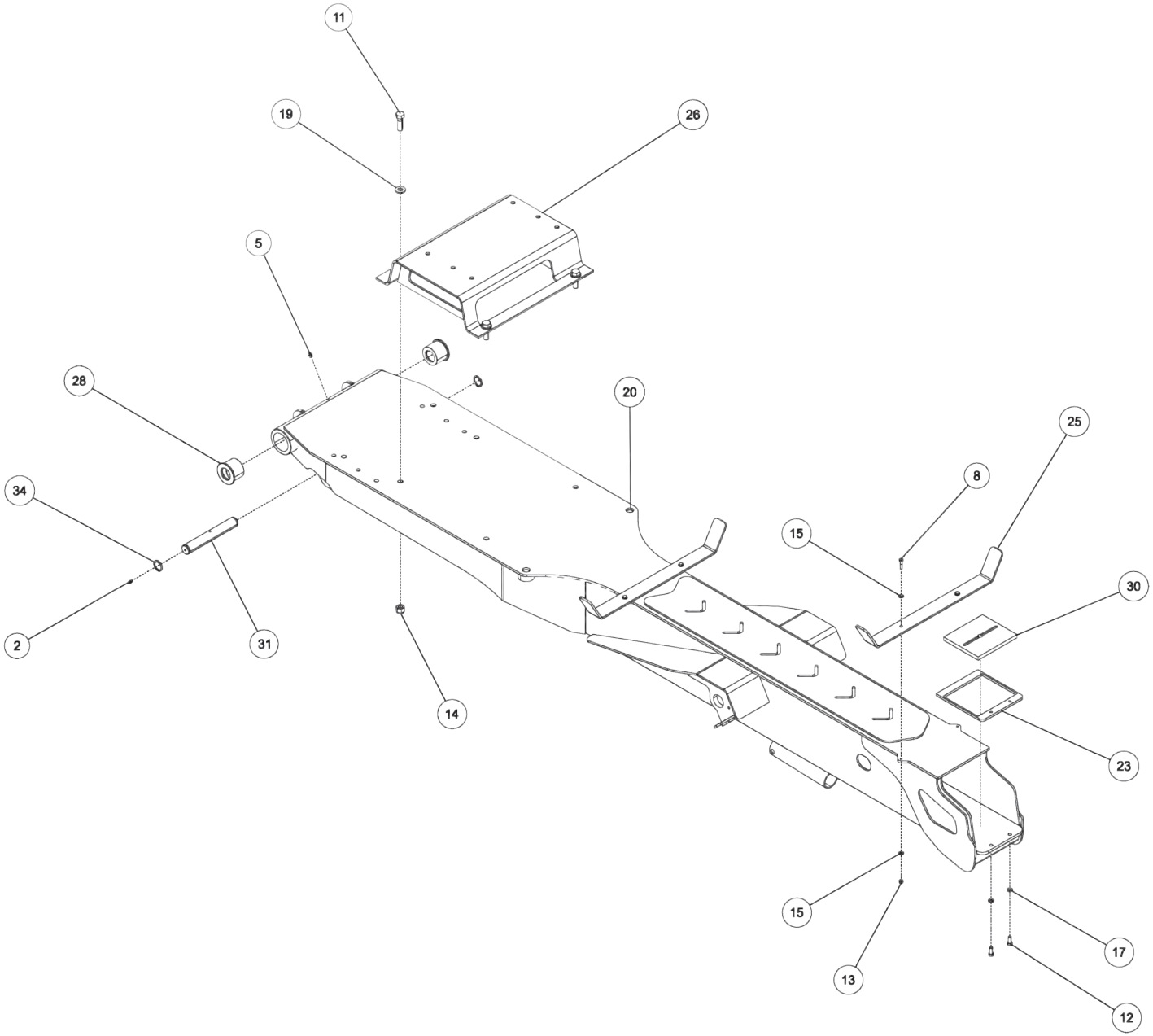

09017249, RECOVERY BOOM ASSEMBLY - 600R (cont'd)

ITEM	PART NUMBER	DESCRIPTION	QTY
1	0300041	CONNECTOR, 8MJ-8MB	2
2	0300113	GREASE FITTING, 1/4-28 STR	4
3	0301388	ELBOW, 8MJ-8MB90	2
4	0301814	RETAINING RING, 3-1/2" EXTERNAL	2
5	0301895	GREASE FITTING, 1/8 STR PTF	1
6	0302340	BUSHING HEX (BRASS) 4MP-2FP	2
7	03025694	PAD, WIRE ROPE 600R KB	1
8	0400057	SCREW, 1/4-20X1-1/4 HHC	4
9	0400126	SCREW, 3/8-16X1 HHC GR5	2
10	0400128	SCREW, 3/8-16X1-1/4 FHS GR8 BO	2
11	0400274	SCREW, 5/8-11X2 HHC GR8	4
12	0400347	SCREW, 3/8-24X7/8 HHC GR5	2
13	0400367	NUT, 1/4-20 LOK	4
14	0400426	NUT, 5/8-11 LOK GR8	4
15	0400451	WASHER, 1/4	8
16	0400480	WASHER, 3/8	2
17	0400482	LKWASHER, 3/8	4
18	0400491	LKWASHER, 1/2	12
19	0400503	WASHER, 5/8 GR8	4
20	08014895	OUTER BOOM WLMT - 600R	1
21	09021840	INNER BOOM, 600R KB	1
22	0906572	KIT-WINCH CABLE STOW	2
23	3012-792002	PLATE - PAD CAGE	1
24	3014-791001	PLATE - 14K WASHER 3014-910000	4
25	3014-792001	PLATE - CABLE WING	2
26	3014-821000	BRACKET WELD'T - 14K DP	1
27	3014-931000	SHEAVE ASSEMBLY - 3014	2
28	3116-792001	BEARING, FLNGD BM PIVOT MAIN BM	2
29	514-1501101	WINCH 15K - DP 15J ER1582	2
30	535-0500001	NYLATRON PAD	1
31	897400001	FRONT PIN	1
32	9010030	FITT, BRASS ELBOW 1/4T-1/8MPX	2
33	9041404	1/2 NC X 1 3/4 HHCS PL GR8	12
34	9056125	1.25 NOM HVY DUTY RET RING EXT	2
35	915352000	PIN WELD'T UPPER/LOWER L	2

09017249, RECOVERY BOOM ASSEMBLY - 600R (cont'd)

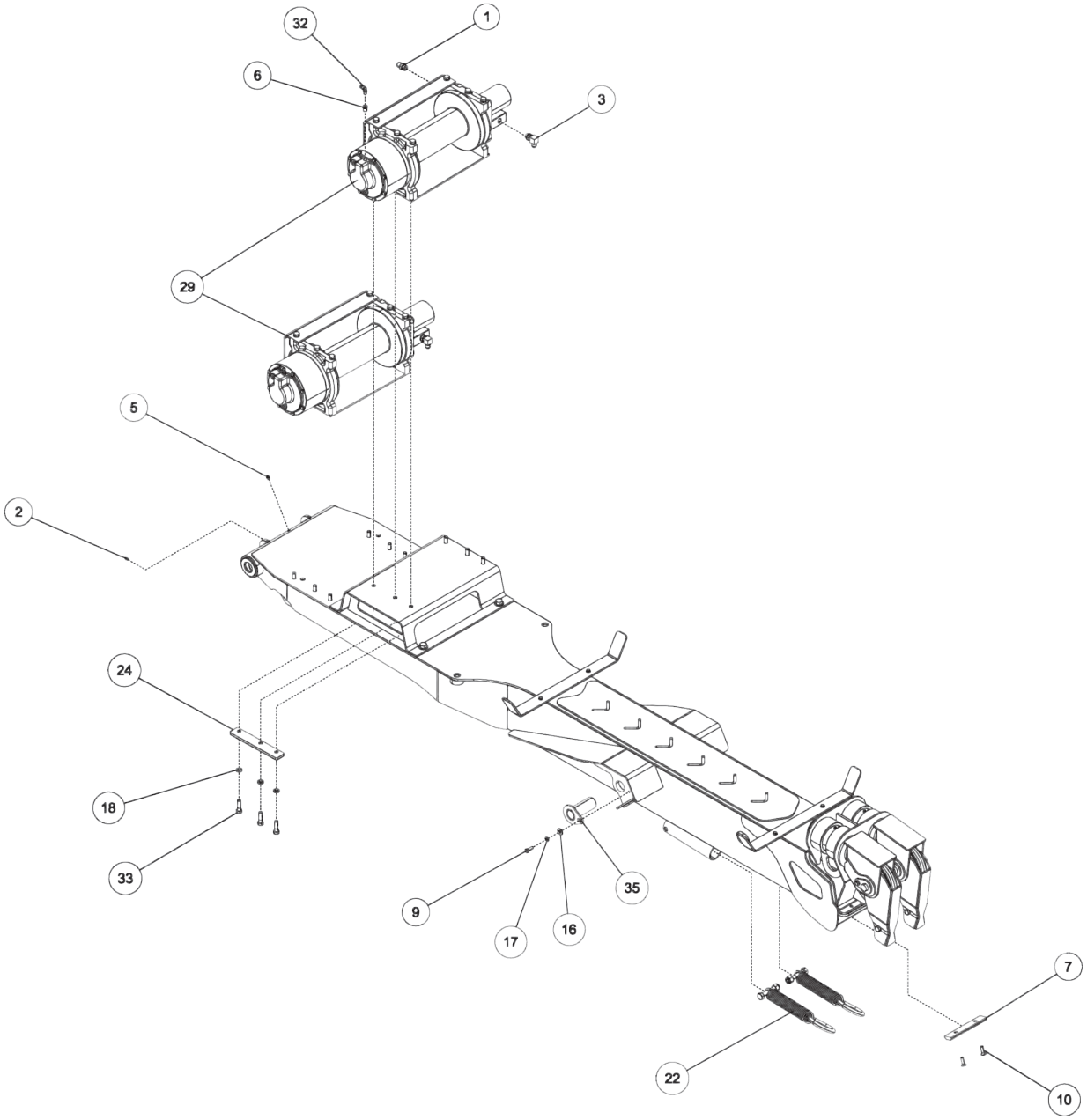

09017249, RECOVERY BOOM ASSEMBLY - 600R (cont'd)

ITEM	PART NUMBER	DESCRIPTION	QTY
1	0300041	CONNECTOR, 8MJ-8MB	2
2	0300113	GREASE FITTING, 1/4-28 STR	4
3	0301388	ELBOW, 8MJ-8MB90	2
4	0301814	RETAINING RING, 3-1/2" EXTERNAL	2
5	0301895	GREASE FITTING, 1/8 STR PTF	1
6	0302340	BUSHING HEX (BRASS) 4MP-2FP	2
7	03025694	PAD, WIRE ROPE 600R KB	1
8	0400057	SCREW, 1/4-20X1-1/4 HHC	4
9	0400126	SCREW, 3/8-16X1 HHC GR5	2
10	0400128	SCREW, 3/8-16X1-1/4 FHS GR8 BO	2
11	0400274	SCREW, 5/8-11X2 HHC GR8	4
12	0400347	SCREW, 3/8-24X7/8 HHC GR5	2
13	0400367	NUT, 1/4-20 LOK	4
14	0400426	NUT, 5/8-11 LOK GR8	4
15	0400451	WASHER, 1/4	8
16	0400480	WASHER, 3/8	2
17	0400482	LKWASHER, 3/8	4
18	0400491	LKWASHER, 1/2	12
19	0400503	WASHER, 5/8 GR8	4
20	08014895	OUTER BOOM WLMT - 600R	1
21	09021840	INNER BOOM, 600R KB	1
22	0906572	KIT-WINCH CABLE STOW	2
23	3012-792002	PLATE - PAD CAGE	1
24	3014-791001	PLATE - 14K WASHER 3014-910000	4
25	3014-792001	PLATE - CABLE WING	2
26	3014-821000	BRACKET WELD'T - 14K DP	1
27	3014-931000	SHEAVE ASSEMBLY - 3014	2
28	3116-792001	BEARING, FLNGD BM PIVOT MAIN BM	2
29	514-1501101	WINCH 15K - DP 15J ER1582	2
30	535-0500001	NYLATRON PAD	1
31	897400001	FRONT PIN	1
32	9010030	FITT, BRASS ELBOW 1/4T-1/8MPX	2
33	9041404	1/2 NC X 1 3/4 HHCS PL GR8	12
34	9056125	1.25 NOM HVY DUTY RET RING EXT	2
35	915352000	PIN WELD'T UPPER/LOWER L	2

09021840, INNER BOOM, 600R KB

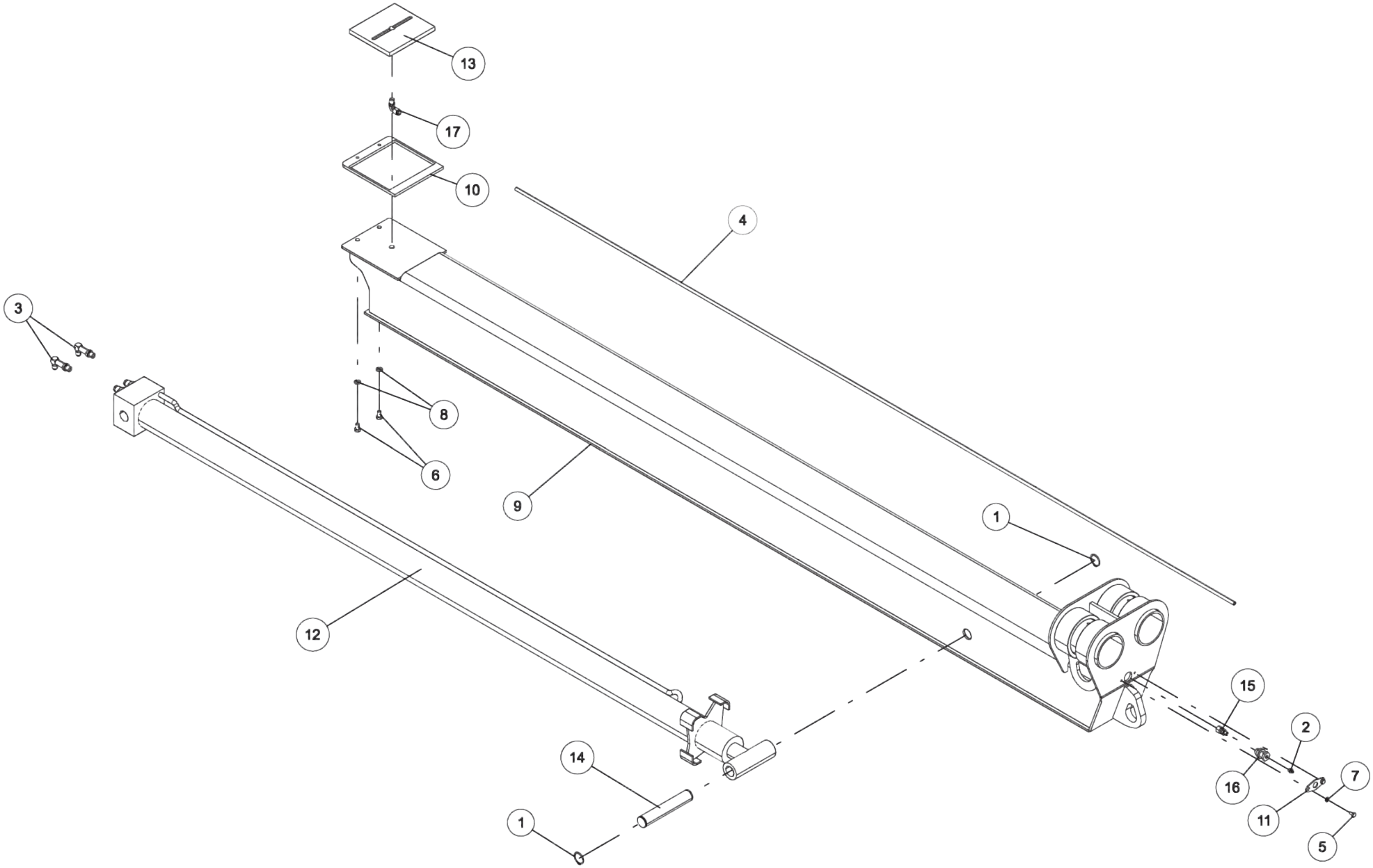

09021840, INNER BOOM, 600R KB (cont'd)

ITEM	PART NUMBER	DESCRIPTION	QTY
1	0301642	SNAP RING, 1-1/4 DIA	2
2	0301895	GREASE FITTING, 1/8 STR PTF	1
3	0307460	FITTING, HYD 6MJ-6MB90LL	2
4	0311460	1/4” GREASE TUBING	1
5	0400060	SCREW, 1/4-20X1/2 HHC GR5	2
6	0400147	SCREW, 3/8-24X5/8 HHC GR5	2
7	0400452	LKWASHER, 1/4	2
8	0400482	LKWASHER, 3/8	2
9	08019355	INNER BOOM, 600R KB	1
10	3012-792002	PLATE - PAD CAGE	1
11	3012-793001	PLATE - LUBE MTG.	1
12	511-3000001	CYL, HYD - MAIN BOOM EXT. 76" ST	1
13	535-0500001	NYLATRON PAD	1
14	897400002	REAR PIN	1
15	9012549	CONNECTOR-MALE 3/8TUBEX1	1
16	9012552	BULKHEAD ADAPTER 1/8M-1/8F NPT	1
17	9012584	ELBOW-1/4NPT X 3/8TUBE 9	1

0906572, KIT - WINCH CABLE STOW

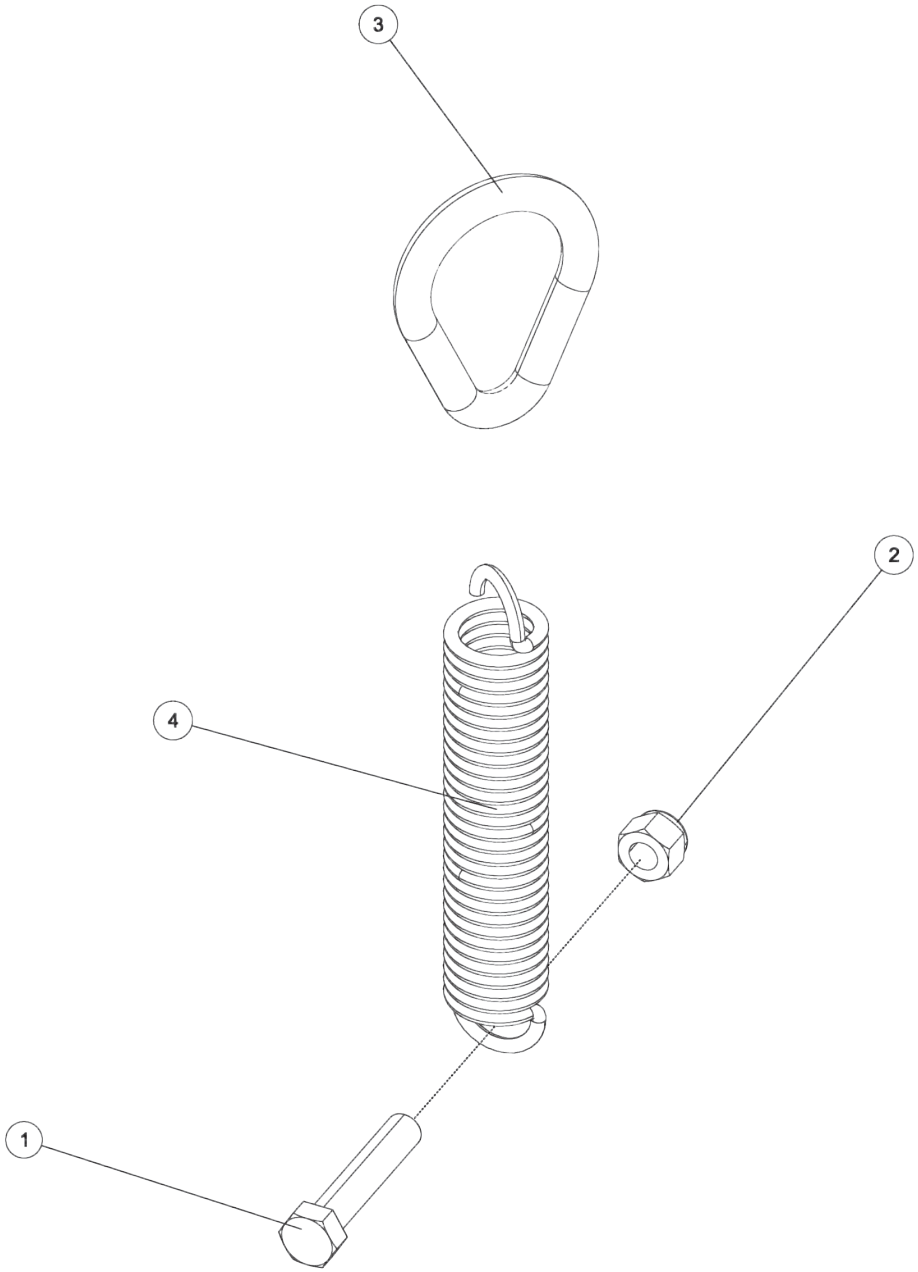

0906572, KIT - WINCH CABLE STOW (cont'd)

ITEM	PART NUMBER	DESCRIPTION	QTY
1	0400257	SCREW, 5/8-11X3-1/4 HHC GR5	1
2	0400421	NUT, 5/8-11 LOK	1
3	9048800	5/8 WELDLESS CHAIN LINK	1
4	945030007	CABLE TIE BACK SPRING-1	1

3014-931000, SHEAVE ASSEMBLY

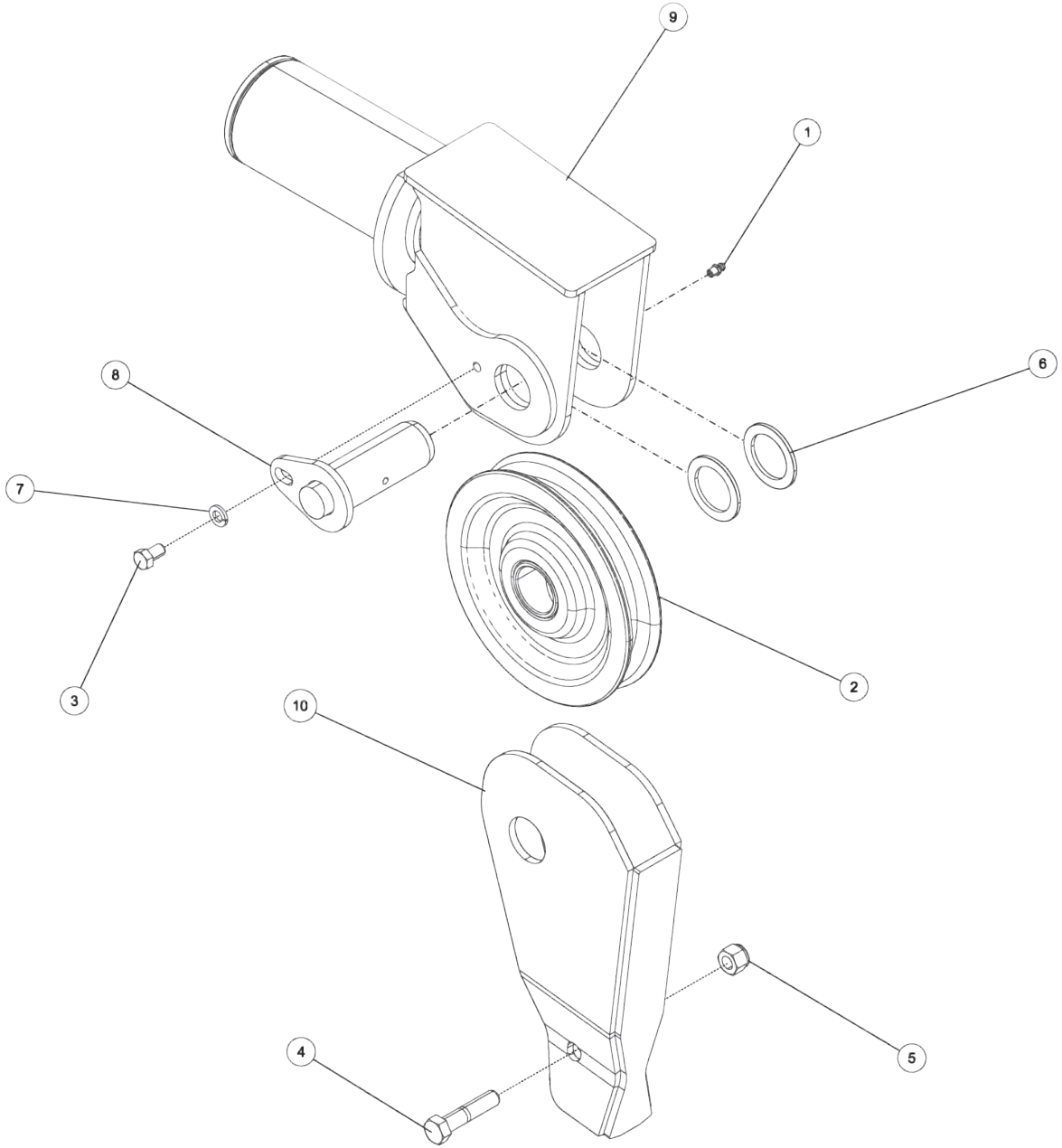

3014-931000, SHEAVE ASSEMBLY (cont'd)

ITEM	PART NUMBER	DESCRIPTION	QTY
1	0300113	GREASE FITTING, 1/4-28 STR	1
2	0300626	SHEAVE,8" 58SHVBBAY 1.5	1
3	0400147	SCREW, 3/8-24X5/8 HHC GR5	1
4	0400184	SCREW, 1/2-13X2-1/4 HHC GR8	1
5	0400408	NUT, 1/2-13 LOK	1
6	0400479	WASHER, 1-1/2X0.125 SHIM	2
7	0400482	LKWASHER, 3/8	1
8	3014-802000	SHEAVE PIN WLMT.	1
9	3014-831000	SHEAVE WELD'T - 3014	1
10	3014-831100	GUIDE - SWIVEL	1

09017869, SUBFRAME ASSEMBLY - 600R KB

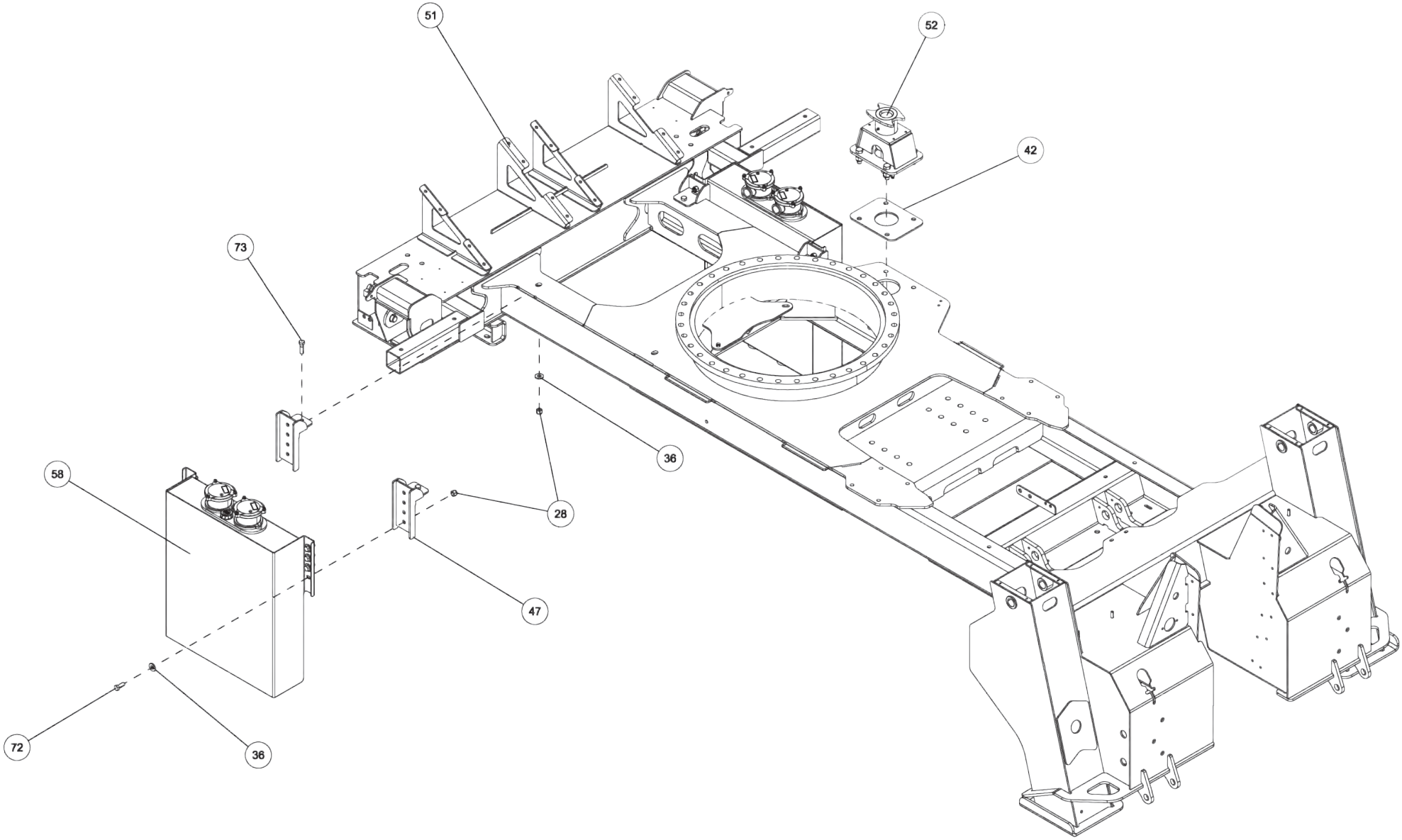

09017869, SUBFRAME ASSEMBLY - 600R KB (cont'd)

ITEM	PART NUMBER	DESCRIPTION	QTY
1	0300113	GREASE FITTING, 1/4-28 STR	2
2	0300188	CLAMP,1-1/2" HOSE	1
3	0300659	HOSE HYD, 45"	2
4	0301895	GREASE FITTING, 1/8 STR PTF	2
5	03021645	HOSE HYD 136 6FJX-6M3K-6FJX90S	4
6	0302575	FITTING-BULKHEAD RUN TEE	2
7	0302757	FITTING, CONN 8MJ - 16MB	3
8	0302850	PLUG 16MB	1
9	0303389	HOSE HYD, 46" LG	2
10	0307650	BEARING ASSY - 55XX	1
11	0307657	HYD HOSE FRT O/R BLKHD-CYL TUB	4
12	0307845	HOSE ASSY - 79"	2
13	0310243	HOSE, 68 6FJX-6M3K-6FJX90S	4
14	0310247	HOSE ASSY, 41"	2
15	0310780	HOSE 45" 8FJX-8M3K-8FJX90S	2
16	0312276	BEARING - BOOM PIVOT	2
17	0400060	SCREW, 1/4-20X1/2 HHC GR5	8
18	0400078	SCREW, 1/4-20X2 HHC GR5	2
19	0400121	SCREW, 3/8-16X3/4 HHC GR5	8
20	0400126	SCREW, 3/8-16X1 HHC GR5	12
21	0400141	SCREW, 3/8-16X7/8 HHC GR5	2
22	0400181	SCREW, 1/2-13X1-1/2 HHC GR5	2
23	0400211	SCREW, 1/2-13X1-3/4 HHC GR5	2
24	0400367	NUT, 1/4-20 LOK	2
25	0400382	NUT, 5/16-18 LOK	34
26	0400392	NUT, 3/8-16 LOK	12
27	0400408	NUT, 1/2-13 LOK	4
28	0400416	NUT, 1/2-13 LOK GR8	28
29	0400431	NUT, 3/4-10 LOK GR8	88
30	0400452	LKWASHER, 1/4	8
31	0400463	WASHER, 5/16	16
32	0400480	WASHER, 3/8	18
33	0400482	LKWASHER, 3/8	22
34	0400490	WASHER, 3/4 GR8	88
35	0400492	USS FLAT WASHER, 1/2	6
36	0400497	WASHER, 1/2 GR8	20
37	0400594	SCREW, 1/4-20X5/8 FHS	4
38	0400633	SCREW, 1/2-13X1-1/2 HHC GR8	8
39	0400642	SCREW, 3/4-10X5-1/2 HHC GR8	16

ITEM	PART NUMBER	DESCRIPTION	QTY
40	0400760	SCREW, 3/4-10X5 SHC	36
41	0400763	SCREW, 3/4-10X5-1/4 HHC GR8	36
42	07022884	PLATE - SLEW LOCK SPACER	1
43	0712380	D-RING	2
44	0725768	RETAINING RING PLATE	2
45	0726045	SPACER - RECOVERY BOOM	2
46	08010330	KNEEBOOM PIVOT	2
47	08014671	TANK MTG BRKT	4
48	08014690	REAR BODY MTG BRKT	2
49	08015252	L-ARM BRKT STOWAGE WLMT (LH)	1
50	08015253	L-ARM BRKT STOWAGE WLMT (RH)	1
51	08015474	600R SUBFRAME WLMT	1
52	09017071	SLEW LOCK ASSY	1
53	09017529	CNTRL VALVE, 8 SPOOL 600R KB	1
54	09017534	CNTRL VALVE, 8 SPOOL 600R KB	1
55	09017893	CONTROL ASSY - RH 600R KB	1
56	28058004	SWING LIMIT CAM WELDMENT	1
57	3012-801000	PIN WELD'- LIFT CYL UP.& LOWER	2
58	3012-980100	HYD. TANK ASSY - 3012	2
59	3116-710025	COVER - JACK LEG	2
60	3116-710026	PLATE, SPACER REAR JACK LEG	1
61	3116-710027	PANEL,BOTTOM SLEW COVER-SUBFRM	2
62	3116-710033	BLOCK, CYLINDER MTG	4
63	3116-912000	LH REAR OUTRIGGER ASSY	1
64	3116-913000	RH REAR OUTRIGGER ASSY	1
65	3116-916000	FRONT OUTRIGGER ASSY	2
66	806030005	LH BOOM GUIDE PAD - BODY ASSY	2
67	806030006	RH BOOM GUIDE PAD - BODY ASSY	2
68	810350002	PIN - UPPER TILT CYL.	2
69	897040002	TOP PAD INNER BOOM	2
70	9041108	5/16 NC X 1 3/4 HHCS PL GR8	10
71	9041212	3/8 NC X 2 3/4 HHCS PL GR8	8
72	9041402	1/2 NC X 1 1/4 HHCS PLT GR8	16
73	9041404	1/2 NC X 1 3/4 HHCS PL GR8	4
74	9043973	5/16-18X1 1/2 FL.HD.SOC.	24
75	9056125	1.25 NOM HVY DUTY RET RING EXT	4
76	BA0259	PIN - "D" RING	2
77	FC41	FITTING-90DEG BLKHD ELB W/ NUT	4

09017869, SUBFRAME ASSEMBLY - 600R KB (cont'd)

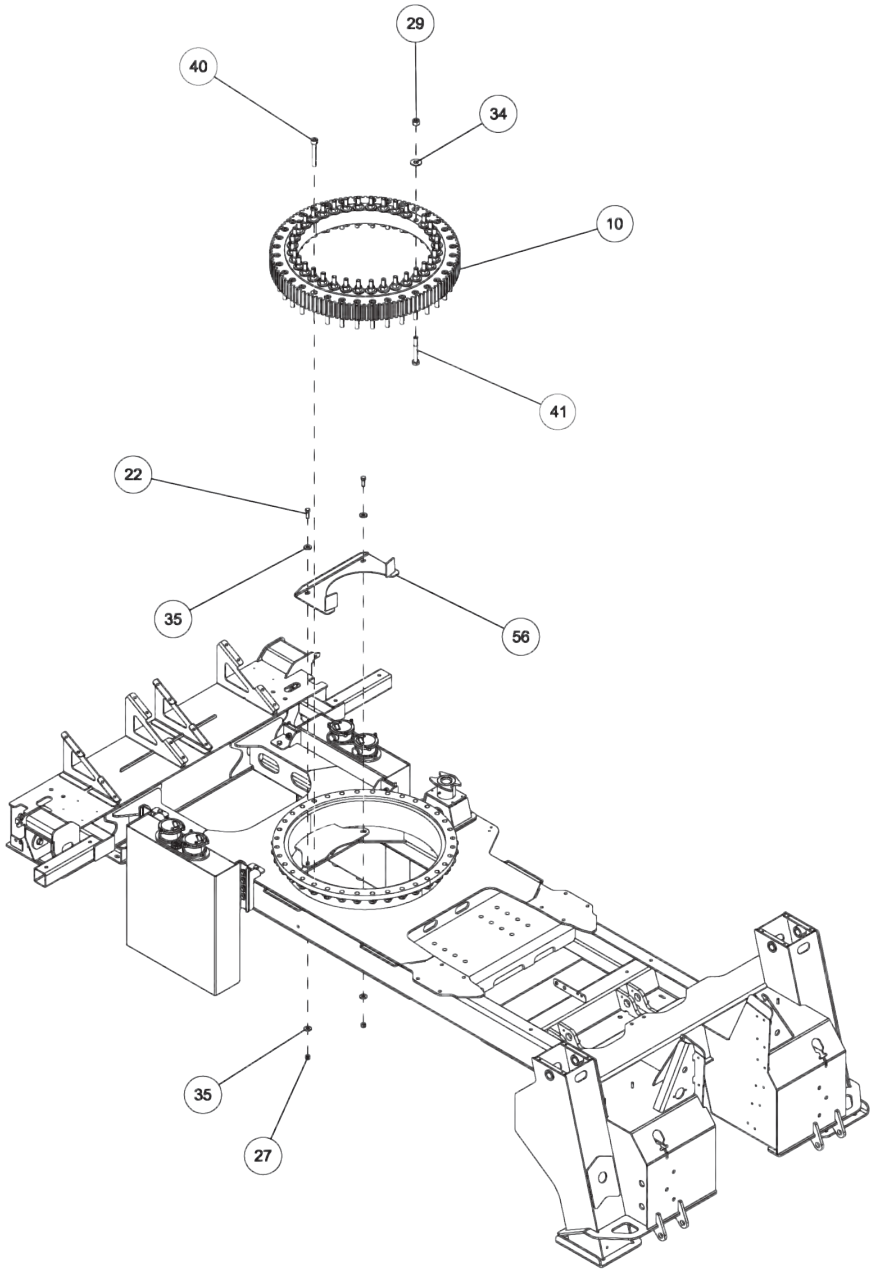

09017869, SUBFRAME ASSEMBLY - 600R KB (cont'd)

ITEM	PART NUMBER	DESCRIPTION	QTY
1	0300113	GREASE FITTING, 1/4-28 STR	2
2	0300188	CLAMP,1-1/2" HOSE	1
3	0300659	HOSE HYD, 45"	2
4	0301895	GREASE FITTING, 1/8 STR PTF	2
5	03021645	HOSE HYD 136 6FJX-6M3K-6FJX90S	4
6	0302575	FITTING-BULKHEAD RUN TEE	2
7	0302757	FITTING, CONN 8MJ - 16MB	3
8	0302850	PLUG 16MB	1
9	0303389	HOSE HYD, 46" LG	2
10	0307650	BEARING ASSY - 55XX	1
11	0307657	HYD HOSE FRT O/R BLKHD-CYL TUB	4
12	0307845	HOSE ASSY - 79"	2
13	0310243	HOSE, 68 6FJX-6M3K-6FJX90S	4
14	0310247	HOSE ASSY, 41"	2
15	0310780	HOSE 45" 8FJX-8M3K-8FJX90S	2
16	0312276	BEARING - BOOM PIVOT	2
17	0400060	SCREW, 1/4-20X1/2 HHC GR5	8
18	0400078	SCREW, 1/4-20X2 HHC GR5	2
19	0400121	SCREW, 3/8-16X3/4 HHC GR5	8
20	0400126	SCREW, 3/8-16X1 HHC GR5	12
21	0400141	SCREW, 3/8-16X7/8 HHC GR5	2
22	0400181	SCREW, 1/2-13X1-1/2 HHC GR5	2
23	0400211	SCREW, 1/2-13X1-3/4 HHC GR5	2
24	0400367	NUT, 1/4-20 LOK	2
25	0400382	NUT, 5/16-18 LOK	34
26	0400392	NUT, 3/8-16 LOK	12
27	0400408	NUT, 1/2-13 LOK	4
28	0400416	NUT, 1/2-13 LOK GR8	28
29	0400431	NUT, 3/4-10 LOK GR8	88
30	0400452	LKWASHER, 1/4	8
31	0400463	WASHER, 5/16	16
32	0400480	WASHER, 3/8	18
33	0400482	LKWASHER, 3/8	22
34	0400490	WASHER, 3/4 GR8	88
35	0400492	USS FLAT WASHER, 1/2	6
36	0400497	WASHER, 1/2 GR8	20
37	0400594	SCREW, 1/4-20X5/8 FHS	4
38	0400633	SCREW, 1/2-13X1-1/2 HHC GR8	8
39	0400642	SCREW, 3/4-10X5-1/2 HHC GR8	16

ITEM	PART NUMBER	DESCRIPTION	QTY
40	0400760	SCREW, 3/4-10X5 SHC	36
41	0400763	SCREW, 3/4-10X5-1/4 HHC GR8	36
42	07022884	PLATE - SLEW LOCK SPACER	1
43	0712380	D-RING	2
44	0725768	RETAINING RING PLATE	2
45	0726045	SPACER - RECOVERY BOOM	2
46	08010330	KNEEBOOM PIVOT	2
47	08014671	TANK MTG BRKT	4
48	08014690	REAR BODY MTG BRKT	2
49	08015252	L-ARM BRKT STOWAGE WLMT (LH)	1
50	08015253	L-ARM BRKT STOWAGE WLMT (RH)	1
51	08015474	600R SUBFRAME WLMT	1
52	09017071	SLEW LOCK ASSY	1
53	09017529	CNTRL VALVE, 8 SPOOL 600R KB	1
54	09017534	CNTRL VALVE, 8 SPOOL 600R KB	1
55	09017893	CONTROL ASSY - RH 600R KB	1
56	28058004	SWING LIMIT CAM WELDMENT	1
57	3012-801000	PIN WELD'- LIFT CYL UP.& LOWER	2
58	3012-980100	HYD. TANK ASSY - 3012	2
59	3116-710025	COVER - JACK LEG	2
60	3116-710026	PLATE, SPACER REAR JACK LEG	1
61	3116-710027	PANEL,BOTTOM SLEW COVER-SUBFRM	2
62	3116-710033	BLOCK, CYLINDER MTG	4
63	3116-912000	LH REAR OUTRIGGER ASSY	1
64	3116-913000	RH REAR OUTRIGGER ASSY	1
65	3116-916000	FRONT OUTRIGGER ASSY	2
66	806030005	LH BOOM GUIDE PAD - BODY ASSY	2
67	806030006	RH BOOM GUIDE PAD - BODY ASSY	2
68	810350002	PIN - UPPER TILT CYL.	2
69	897040002	TOP PAD INNER BOOM	2
70	9041108	5/16 NC X 1 3/4 HHCS PL GR8	10
71	9041212	3/8 NC X 2 3/4 HHCS PL GR8	8
72	9041402	1/2 NC X 1 1/4 HHCS PLT GR8	16
73	9041404	1/2 NC X 1 3/4 HHCS PL GR8	4
74	9043973	5/16-18X1 1/2 FL.HD.SOC.	24
75	9056125	1.25 NOM HVY DUTY RET RING EXT	4
76	BA0259	PIN - "D" RING	2
77	FC41	FITTING-90DEG BLKHD ELB W/ NUT	4

09017869, SUBFRAME ASSEMBLY - 600R KB (cont'd)

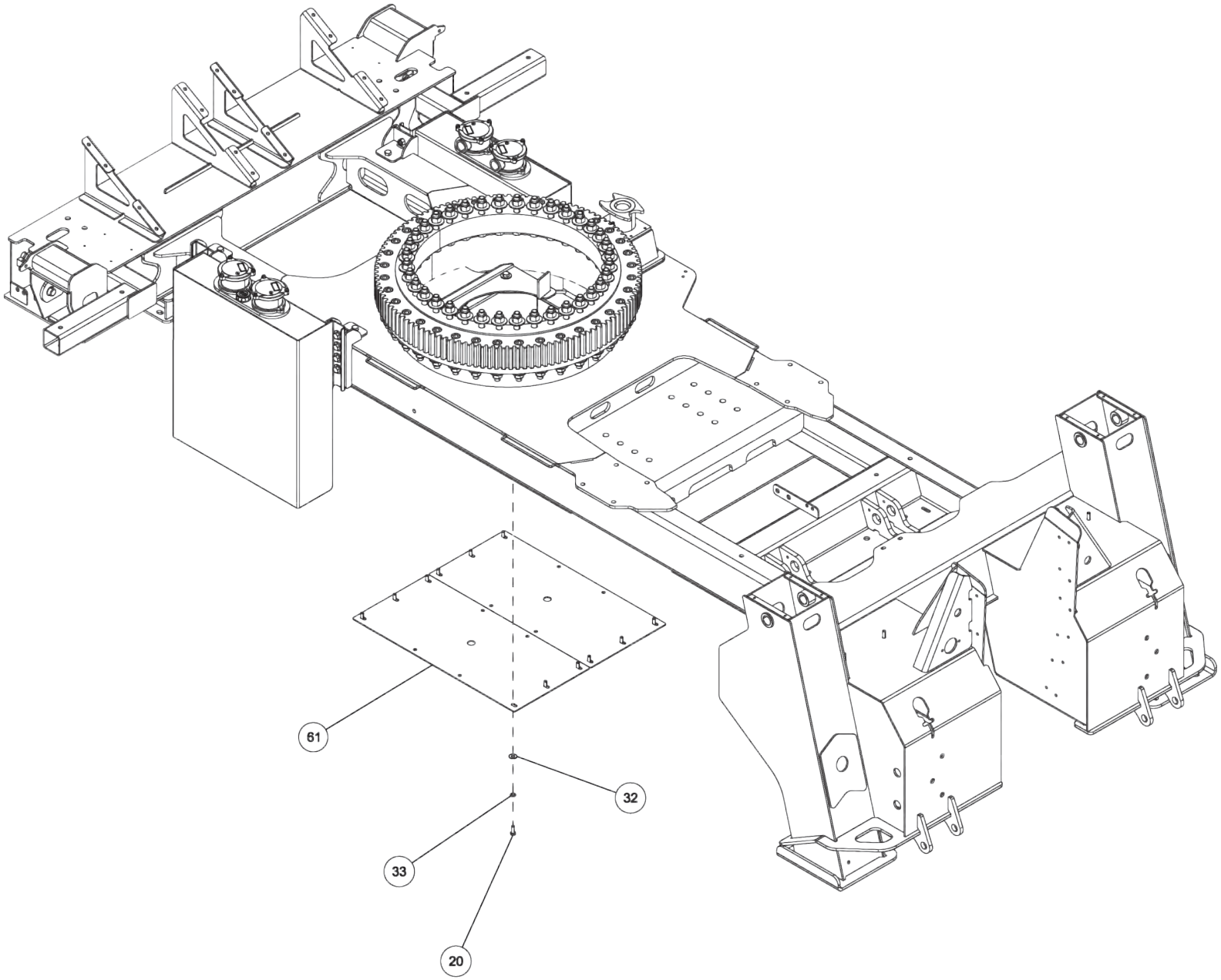

09017869, SUBFRAME ASSEMBLY - 600R KB (cont'd)

ITEM	PART NUMBER	DESCRIPTION	QTY
1	0300113	GREASE FITTING, 1/4-28 STR	2
2	0300188	CLAMP,1-1/2" HOSE	1
3	0300659	HOSE HYD, 45"	2
4	0301895	GREASE FITTING, 1/8 STR PTF	2
5	03021645	HOSE HYD 136 6FJX-6M3K-6FJX90S	4
6	0302575	FITTING-BULKHEAD RUN TEE	2
7	0302757	FITTING, CONN 8MJ - 16MB	3
8	0302850	PLUG 16MB	1
9	0303389	HOSE HYD, 46" LG	2
10	0307650	BEARING ASSY - 55XX	1
11	0307657	HYD HOSE FRT O/R BLKHD-CYL TUB	4
12	0307845	HOSE ASSY - 79"	2
13	0310243	HOSE, 68 6FJX-6M3K-6FJX90S	4
14	0310247	HOSE ASSY, 41"	2
15	0310780	HOSE 45" 8FJX-8M3K-8FJX90S	2
16	0312276	BEARING - BOOM PIVOT	2
17	0400060	SCREW, 1/4-20X1/2 HHC GR5	8
18	0400078	SCREW, 1/4-20X2 HHC GR5	2
19	0400121	SCREW, 3/8-16X3/4 HHC GR5	8
20	0400126	SCREW, 3/8-16X1 HHC GR5	12
21	0400141	SCREW, 3/8-16X7/8 HHC GR5	2
22	0400181	SCREW, 1/2-13X1-1/2 HHC GR5	2
23	0400211	SCREW, 1/2-13X1-3/4 HHC GR5	2
24	0400367	NUT, 1/4-20 LOK	2
25	0400382	NUT, 5/16-18 LOK	34
26	0400392	NUT, 3/8-16 LOK	12
27	0400408	NUT, 1/2-13 LOK	4
28	0400416	NUT, 1/2-13 LOK GR8	28
29	0400431	NUT, 3/4-10 LOK GR8	88
30	0400452	LKWASHER, 1/4	8
31	0400463	WASHER, 5/16	16
32	0400480	WASHER, 3/8	18
33	0400482	LKWASHER, 3/8	22
34	0400490	WASHER, 3/4 GR8	88
35	0400492	USS FLAT WASHER, 1/2	6
36	0400497	WASHER, 1/2 GR8	20
37	0400594	SCREW, 1/4-20X5/8 FHS	4
38	0400633	SCREW, 1/2-13X1-1/2 HHC GR8	8
39	0400642	SCREW, 3/4-10X5-1/2 HHC GR8	16

ITEM	PART NUMBER	DESCRIPTION	QTY
40	0400760	SCREW, 3/4-10X5 SHC	36
41	0400763	SCREW, 3/4-10X5-1/4 HHC GR8	36
42	07022884	PLATE - SLEW LOCK SPACER	1
43	0712380	D-RING	2
44	0725768	RETAINING RING PLATE	2
45	0726045	SPACER - RECOVERY BOOM	2
46	08010330	KNEEBOOM PIVOT	2
47	08014671	TANK MTG BRKT	4
48	08014690	REAR BODY MTG BRKT	2
49	08015252	L-ARM BRKT STOWAGE WLMT (LH)	1
50	08015253	L-ARM BRKT STOWAGE WLMT (RH)	1
51	08015474	600R SUBFRAME WLMT	1
52	09017071	SLEW LOCK ASSY	1
53	09017529	CNTRL VALVE, 8 SPOOL 600R KB	1
54	09017534	CNTRL VALVE, 8 SPOOL 600R KB	1
55	09017893	CONTROL ASSY - RH 600R KB	1
56	28058004	SWING LIMIT CAM WELDMENT	1
57	3012-801000	PIN WELD'- LIFT CYL UP.& LOWER	2
58	3012-980100	HYD. TANK ASSY - 3012	2
59	3116-710025	COVER - JACK LEG	2
60	3116-710026	PLATE, SPACER REAR JACK LEG	1
61	3116-710027	PANEL,BOTTOM SLEW COVER-SUBFRM	2
62	3116-710033	BLOCK, CYLINDER MTG	4
63	3116-912000	LH REAR OUTRIGGER ASSY	1
64	3116-913000	RH REAR OUTRIGGER ASSY	1
65	3116-916000	FRONT OUTRIGGER ASSY	2
66	806030005	LH BOOM GUIDE PAD - BODY ASSY	2
67	806030006	RH BOOM GUIDE PAD - BODY ASSY	2
68	810350002	PIN - UPPER TILT CYL.	2
69	897040002	TOP PAD INNER BOOM	2
70	9041108	5/16 NC X 1 3/4 HHCS PL GR8	10
71	9041212	3/8 NC X 2 3/4 HHCS PL GR8	8
72	9041402	1/2 NC X 1 1/4 HHCS PLT GR8	16
73	9041404	1/2 NC X 1 3/4 HHCS PL GR8	4
74	9043973	5/16-18X1 1/2 FL.HD.SOC.	24
75	9056125	1.25 NOM HVY DUTY RET RING EXT	4
76	BA0259	PIN - "D" RING	2
77	FC41	FITTING-90DEG BLKHD ELB W/ NUT	4

09017869, SUBFRAME ASSEMBLY - 600R KB (cont'd)

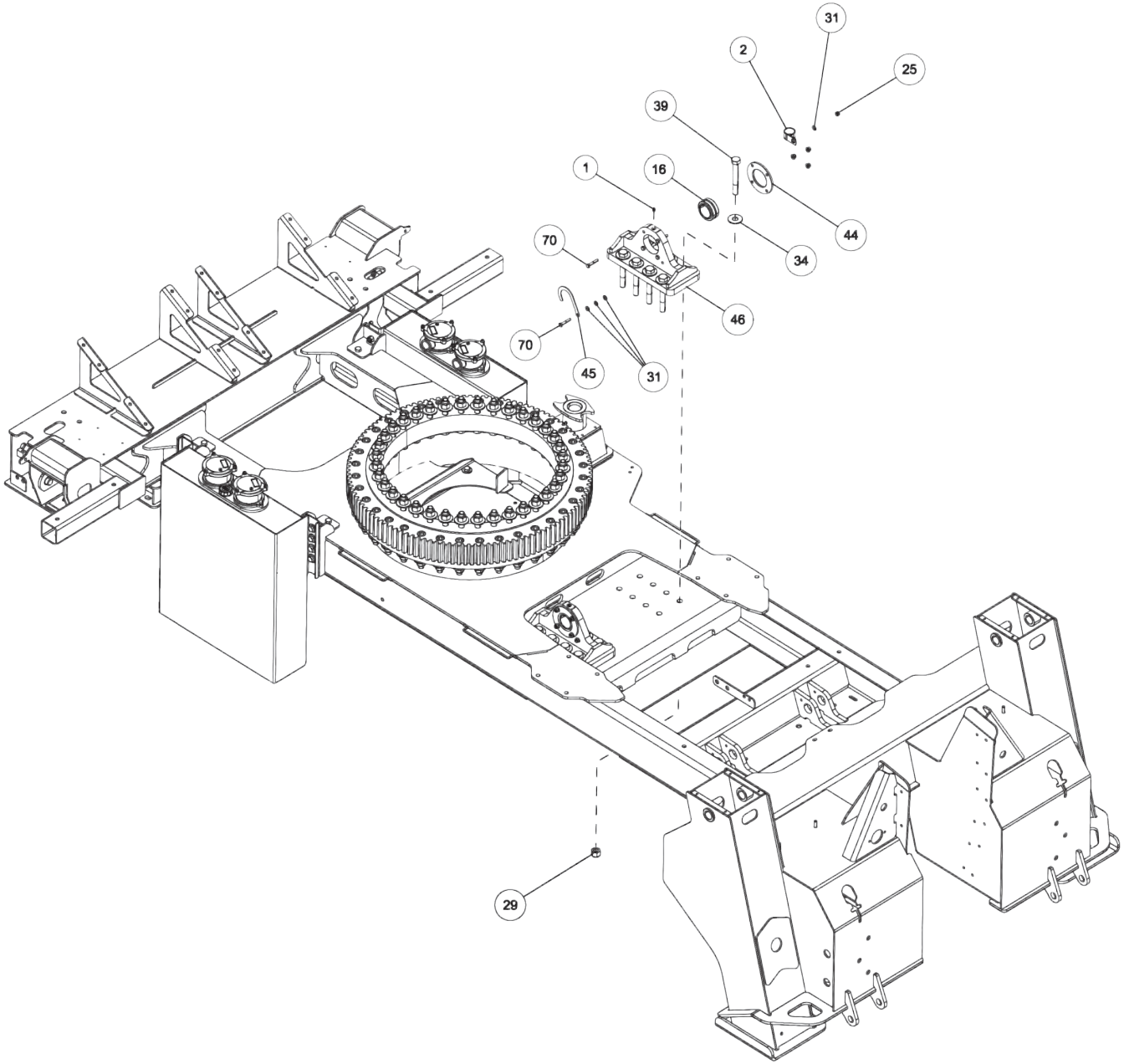

09017869, SUBFRAME ASSEMBLY - 600R KB (cont'd)

ITEM	PART NUMBER	DESCRIPTION	QTY
1	0300113	GREASE FITTING, 1/4-28 STR	2
2	0300188	CLAMP,1-1/2" HOSE	1
3	0300659	HOSE HYD, 45"	2
4	0301895	GREASE FITTING, 1/8 STR PTF	2
5	03021645	HOSE HYD 136 6FJX-6M3K-6FJX90S	4
6	0302575	FITTING-BULKHEAD RUN TEE	2
7	0302757	FITTING, CONN 8MJ - 16MB	3
8	0302850	PLUG 16MB	1
9	0303389	HOSE HYD, 46" LG	2
10	0307650	BEARING ASSY - 55XX	1
11	0307657	HYD HOSE FRT O/R BLKHD-CYL TUB	4
12	0307845	HOSE ASSY - 79"	2
13	0310243	HOSE, 68 6FJX-6M3K-6FJX90S	4
14	0310247	HOSE ASSY, 41"	2
15	0310780	HOSE 45" 8FJX-8M3K-8FJX90S	2
16	0312276	BEARING - BOOM PIVOT	2
17	0400060	SCREW, 1/4-20X1/2 HHC GR5	8
18	0400078	SCREW, 1/4-20X2 HHC GR5	2
19	0400121	SCREW, 3/8-16X3/4 HHC GR5	8
20	0400126	SCREW, 3/8-16X1 HHC GR5	12
21	0400141	SCREW, 3/8-16X7/8 HHC GR5	2
22	0400181	SCREW, 1/2-13X1-1/2 HHC GR5	2
23	0400211	SCREW, 1/2-13X1-3/4 HHC GR5	2
24	0400367	NUT, 1/4-20 LOK	2
25	0400382	NUT, 5/16-18 LOK	34
26	0400392	NUT, 3/8-16 LOK	12
27	0400408	NUT, 1/2-13 LOK	4
28	0400416	NUT, 1/2-13 LOK GR8	28
29	0400431	NUT, 3/4-10 LOK GR8	88
30	0400452	LKWASHER, 1/4	8
31	0400463	WASHER, 5/16	16
32	0400480	WASHER, 3/8	18
33	0400482	LKWASHER, 3/8	22
34	0400490	WASHER, 3/4 GR8	88
35	0400492	USS FLAT WASHER, 1/2	6
36	0400497	WASHER, 1/2 GR8	20
37	0400594	SCREW, 1/4-20X5/8 FHS	4
38	0400633	SCREW, 1/2-13X1-1/2 HHC GR8	8
39	0400642	SCREW, 3/4-10X5-1/2 HHC GR8	16

ITEM	PART NUMBER	DESCRIPTION	QTY
40	0400760	SCREW, 3/4-10X5 SHC	36
41	0400763	SCREW, 3/4-10X5-1/4 HHC GR8	36
42	07022884	PLATE - SLEW LOCK SPACER	1
43	0712380	D-RING	2
44	0725768	RETAINING RING PLATE	2
45	0726045	SPACER - RECOVERY BOOM	2
46	08010330	KNEEBOOM PIVOT	2
47	08014671	TANK MTG BRKT	4
48	08014690	REAR BODY MTG BRKT	2
49	08015252	L-ARM BRKT STOWAGE WLMT (LH)	1
50	08015253	L-ARM BRKT STOWAGE WLMT (RH)	1
51	08015474	600R SUBFRAME WLMT	1
52	09017071	SLEW LOCK ASSY	1
53	09017529	CNTRL VALVE, 8 SPOOL 600R KB	1
54	09017534	CNTRL VALVE, 8 SPOOL 600R KB	1
55	09017893	CONTROL ASSY - RH 600R KB	1
56	28058004	SWING LIMIT CAM WELDMENT	1
57	3012-801000	PIN WELD'- LIFT CYL UP.& LOWER	2
58	3012-980100	HYD. TANK ASSY - 3012	2
59	3116-710025	COVER - JACK LEG	2
60	3116-710026	PLATE, SPACER REAR JACK LEG	1
61	3116-710027	PANEL,BOTTOM SLEW COVER-SUBFRM	2
62	3116-710033	BLOCK, CYLINDER MTG	4
63	3116-912000	LH REAR OUTRIGGER ASSY	1
64	3116-913000	RH REAR OUTRIGGER ASSY	1
65	3116-916000	FRONT OUTRIGGER ASSY	2
66	806030005	LH BOOM GUIDE PAD - BODY ASSY	2
67	806030006	RH BOOM GUIDE PAD - BODY ASSY	2
68	810350002	PIN - UPPER TILT CYL.	2
69	897040002	TOP PAD INNER BOOM	2
70	9041108	5/16 NC X 1 3/4 HHCS PL GR8	10
71	9041212	3/8 NC X 2 3/4 HHCS PL GR8	8
72	9041402	1/2 NC X 1 1/4 HHCS PLT GR8	16
73	9041404	1/2 NC X 1 3/4 HHCS PL GR8	4
74	9043973	5/16-18X1 1/2 FL.HD.SOC.	24
75	9056125	1.25 NOM HVY DUTY RET RING EXT	4
76	BA0259	PIN - "D" RING	2
77	FC41	FITTING-90DEG BLKHD ELB W/ NUT	4

09017869, SUBFRAME ASSEMBLY - 600R KB (cont'd)

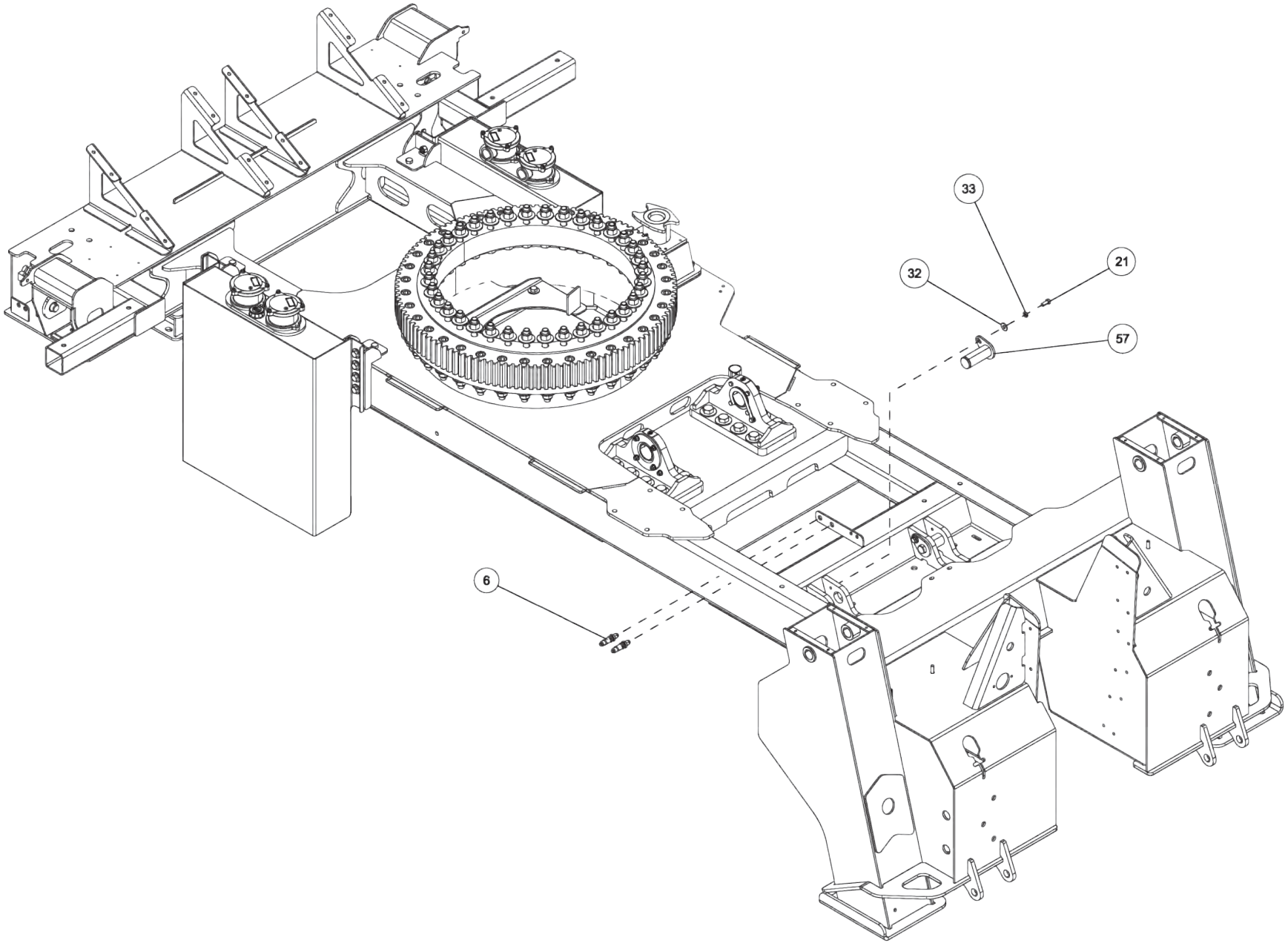

09017869, SUBFRAME ASSEMBLY - 600R KB (cont'd)

ITEM	PART NUMBER	DESCRIPTION	QTY
1	0300113	GREASE FITTING, 1/4-28 STR	2
2	0300188	CLAMP,1-1/2" HOSE	1
3	0300659	HOSE HYD, 45"	2
4	0301895	GREASE FITTING, 1/8 STR PTF	2
5	03021645	HOSE HYD 136 6FJX-6M3K-6FJX90S	4
6	0302575	FITTING-BULKHEAD RUN TEE	2
7	0302757	FITTING, CONN 8MJ - 16MB	3
8	0302850	PLUG 16MB	1
9	0303389	HOSE HYD, 46" LG	2
10	0307650	BEARING ASSY - 55XX	1
11	0307657	HYD HOSE FRT O/R BLKHD-CYL TUB	4
12	0307845	HOSE ASSY - 79"	2
13	0310243	HOSE, 68 6FJX-6M3K-6FJX90S	4
14	0310247	HOSE ASSY, 41"	2
15	0310780	HOSE 45" 8FJX-8M3K-8FJX90S	2
16	0312276	BEARING - BOOM PIVOT	2
17	0400060	SCREW, 1/4-20X1/2 HHC GR5	8
18	0400078	SCREW, 1/4-20X2 HHC GR5	2
19	0400121	SCREW, 3/8-16X3/4 HHC GR5	8
20	0400126	SCREW, 3/8-16X1 HHC GR5	12
21	0400141	SCREW, 3/8-16X7/8 HHC GR5	2
22	0400181	SCREW, 1/2-13X1-1/2 HHC GR5	2
23	0400211	SCREW, 1/2-13X1-3/4 HHC GR5	2
24	0400367	NUT, 1/4-20 LOK	2
25	0400382	NUT, 5/16-18 LOK	34
26	0400392	NUT, 3/8-16 LOK	12
27	0400408	NUT, 1/2-13 LOK	4
28	0400416	NUT, 1/2-13 LOK GR8	28
29	0400431	NUT, 3/4-10 LOK GR8	88
30	0400452	LKWASHER, 1/4	8
31	0400463	WASHER, 5/16	16
32	0400480	WASHER, 3/8	18
33	0400482	LKWASHER, 3/8	22
34	0400490	WASHER, 3/4 GR8	88
35	0400492	USS FLAT WASHER, 1/2	6
36	0400497	WASHER, 1/2 GR8	20
37	0400594	SCREW, 1/4-20X5/8 FHS	4
38	0400633	SCREW, 1/2-13X1-1/2 HHC GR8	8
39	0400642	SCREW, 3/4-10X5-1/2 HHC GR8	16

ITEM	PART NUMBER	DESCRIPTION	QTY
40	0400760	SCREW, 3/4-10X5 SHC	36
41	0400763	SCREW, 3/4-10X5-1/4 HHC GR8	36
42	07022884	PLATE - SLEW LOCK SPACER	1
43	0712380	D-RING	2
44	0725768	RETAINING RING PLATE	2
45	0726045	SPACER - RECOVERY BOOM	2
46	08010330	KNEEBOOM PIVOT	2
47	08014671	TANK MTG BRKT	4
48	08014690	REAR BODY MTG BRKT	2
49	08015252	L-ARM BRKT STOWAGE WLMT (LH)	1
50	08015253	L-ARM BRKT STOWAGE WLMT (RH)	1
51	08015474	600R SUBFRAME WLMT	1
52	09017071	SLEW LOCK ASSY	1
53	09017529	CNTRL VALVE, 8 SPOOL 600R KB	1
54	09017534	CNTRL VALVE, 8 SPOOL 600R KB	1
55	09017893	CONTROL ASSY - RH 600R KB	1
56	28058004	SWING LIMIT CAM WELDMENT	1
57	3012-801000	PIN WELD'- LIFT CYL UP.& LOWER	2
58	3012-980100	HYD. TANK ASSY - 3012	2
59	3116-710025	COVER - JACK LEG	2
60	3116-710026	PLATE, SPACER REAR JACK LEG	1
61	3116-710027	PANEL,BOTTOM SLEW COVER-SUBFRM	2
62	3116-710033	BLOCK, CYLINDER MTG	4
63	3116-912000	LH REAR OUTRIGGER ASSY	1
64	3116-913000	RH REAR OUTRIGGER ASSY	1
65	3116-916000	FRONT OUTRIGGER ASSY	2
66	806030005	LH BOOM GUIDE PAD - BODY ASSY	2
67	806030006	RH BOOM GUIDE PAD - BODY ASSY	2
68	810350002	PIN - UPPER TILT CYL.	2
69	897040002	TOP PAD INNER BOOM	2
70	9041108	5/16 NC X 1 3/4 HHCS PL GR8	10
71	9041212	3/8 NC X 2 3/4 HHCS PL GR8	8
72	9041402	1/2 NC X 1 1/4 HHCS PLT GR8	16
73	9041404	1/2 NC X 1 3/4 HHCS PL GR8	4
74	9043973	5/16-18X1 1/2 FL.HD.SOC.	24
75	9056125	1.25 NOM HVY DUTY RET RING EXT	4
76	BA0259	PIN - "D" RING	2
77	FC41	FITTING-90DEG BLKHD ELB W/ NUT	4

09017869, SUBFRAME ASSEMBLY - 600R KB (cont'd)

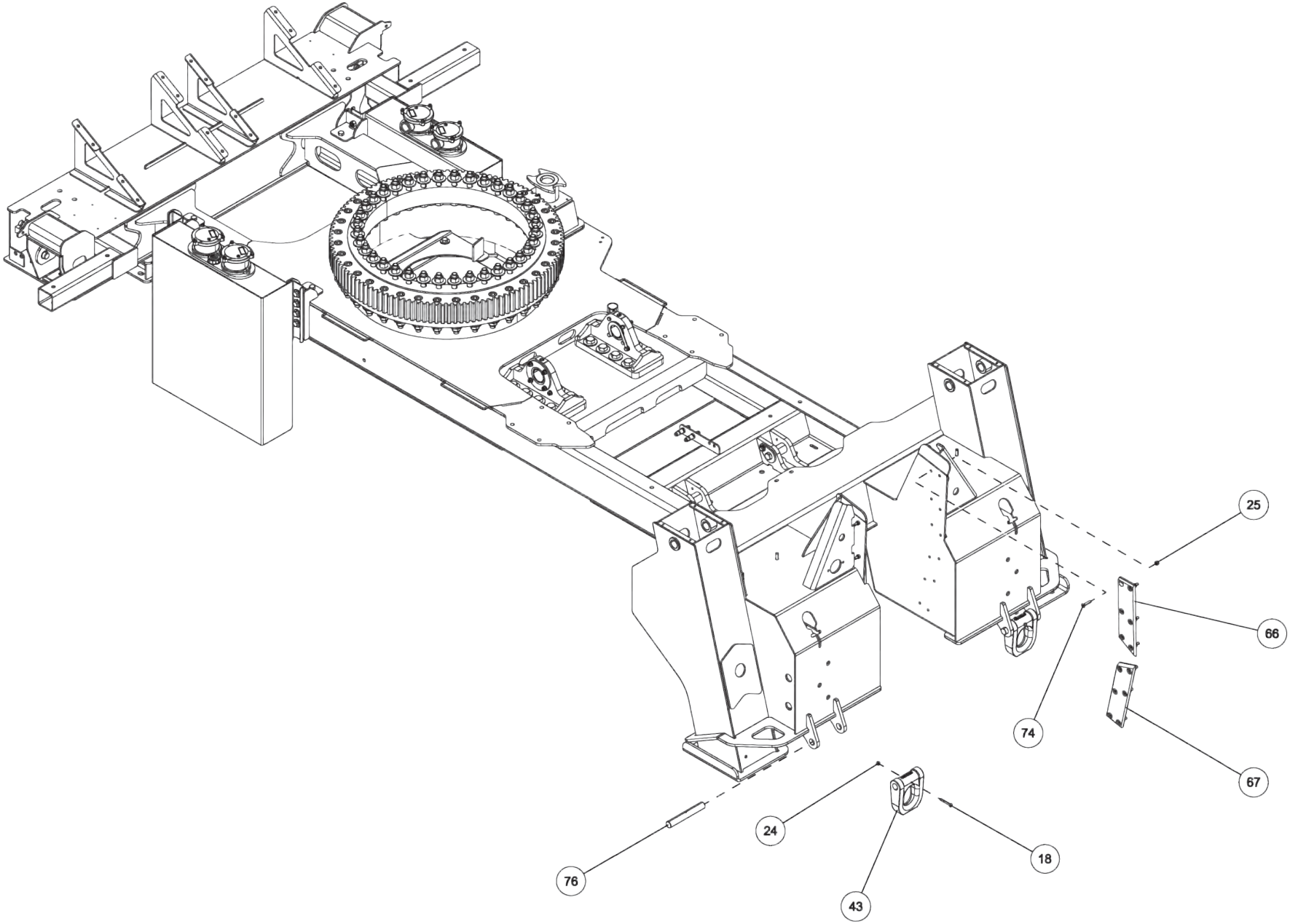

09017869, SUBFRAME ASSEMBLY - 600R KB (cont'd)

ITEM	PART NUMBER	DESCRIPTION	QTY
1	0300113	GREASE FITTING, 1/4-28 STR	2
2	0300188	CLAMP,1-1/2" HOSE	1
3	0300659	HOSE HYD, 45"	2
4	0301895	GREASE FITTING, 1/8 STR PTF	2
5	03021645	HOSE HYD 136 6FJX-6M3K-6FJX90S	4
6	0302575	FITTING-BULKHEAD RUN TEE	2
7	0302757	FITTING, CONN 8MJ - 16MB	3
8	0302850	PLUG 16MB	1
9	0303389	HOSE HYD, 46" LG	2
10	0307650	BEARING ASSY - 55XX	1
11	0307657	HYD HOSE FRT O/R BLKHD-CYL TUB	4
12	0307845	HOSE ASSY - 79"	2
13	0310243	HOSE, 68 6FJX-6M3K-6FJX90S	4
14	0310247	HOSE ASSY, 41"	2
15	0310780	HOSE 45" 8FJX-8M3K-8FJX90S	2
16	0312276	BEARING - BOOM PIVOT	2
17	0400060	SCREW, 1/4-20X1/2 HHC GR5	8
18	0400078	SCREW, 1/4-20X2 HHC GR5	2
19	0400121	SCREW, 3/8-16X3/4 HHC GR5	8
20	0400126	SCREW, 3/8-16X1 HHC GR5	12
21	0400141	SCREW, 3/8-16X7/8 HHC GR5	2
22	0400181	SCREW, 1/2-13X1-1/2 HHC GR5	2
23	0400211	SCREW, 1/2-13X1-3/4 HHC GR5	2
24	0400367	NUT, 1/4-20 LOK	2
25	0400382	NUT, 5/16-18 LOK	34
26	0400392	NUT, 3/8-16 LOK	12
27	0400408	NUT, 1/2-13 LOK	4
28	0400416	NUT, 1/2-13 LOK GR8	28
29	0400431	NUT, 3/4-10 LOK GR8	88
30	0400452	LKWASHER, 1/4	8
31	0400463	WASHER, 5/16	16
32	0400480	WASHER, 3/8	18
33	0400482	LKWASHER, 3/8	22
34	0400490	WASHER, 3/4 GR8	88
35	0400492	USS FLAT WASHER, 1/2	6
36	0400497	WASHER, 1/2 GR8	20
37	0400594	SCREW, 1/4-20X5/8 FHS	4
38	0400633	SCREW, 1/2-13X1-1/2 HHC GR8	8
39	0400642	SCREW, 3/4-10X5-1/2 HHC GR8	16

ITEM	PART NUMBER	DESCRIPTION	QTY
40	0400760	SCREW, 3/4-10X5 SHC	36
41	0400763	SCREW, 3/4-10X5-1/4 HHC GR8	36
42	07022884	PLATE - SLEW LOCK SPACER	1
43	0712380	D-RING	2
44	0725768	RETAINING RING PLATE	2
45	0726045	SPACER - RECOVERY BOOM	2
46	08010330	KNEEBOOM PIVOT	2
47	08014671	TANK MTG BRKT	4
48	08014690	REAR BODY MTG BRKT	2
49	08015252	L-ARM BRKT STOWAGE WLMT (LH)	1
50	08015253	L-ARM BRKT STOWAGE WLMT (RH)	1
51	08015474	600R SUBFRAME WLMT	1
52	09017071	SLEW LOCK ASSY	1
53	09017529	CNTRL VALVE, 8 SPOOL 600R KB	1
54	09017534	CNTRL VALVE, 8 SPOOL 600R KB	1
55	09017893	CONTROL ASSY - RH 600R KB	1
56	28058004	SWING LIMIT CAM WELDMENT	1
57	3012-801000	PIN WELD'- LIFT CYL UP.& LOWER	2
58	3012-980100	HYD. TANK ASSY - 3012	2
59	3116-710025	COVER - JACK LEG	2
60	3116-710026	PLATE, SPACER REAR JACK LEG	1
61	3116-710027	PANEL,BOTTOM SLEW COVER-SUBFRM	2
62	3116-710033	BLOCK, CYLINDER MTG	4
63	3116-912000	LH REAR OUTRIGGER ASSY	1
64	3116-913000	RH REAR OUTRIGGER ASSY	1
65	3116-916000	FRONT OUTRIGGER ASSY	2
66	806030005	LH BOOM GUIDE PAD - BODY ASSY	2
67	806030006	RH BOOM GUIDE PAD - BODY ASSY	2
68	810350002	PIN - UPPER TILT CYL.	2
69	897040002	TOP PAD INNER BOOM	2
70	9041108	5/16 NC X 1 3/4 HHCS PL GR8	10
71	9041212	3/8 NC X 2 3/4 HHCS PL GR8	8
72	9041402	1/2 NC X 1 1/4 HHCS PLT GR8	16
73	9041404	1/2 NC X 1 3/4 HHCS PL GR8	4
74	9043973	5/16-18X1 1/2 FL.HD.SOC.	24
75	9056125	1.25 NOM HVY DUTY RET RING EXT	4
76	BA0259	PIN - "D" RING	2
77	FC41	FITTING-90DEG BLKHD ELB W/ NUT	4

09017869, SUBFRAME ASSEMBLY - 600R KB (cont'd)

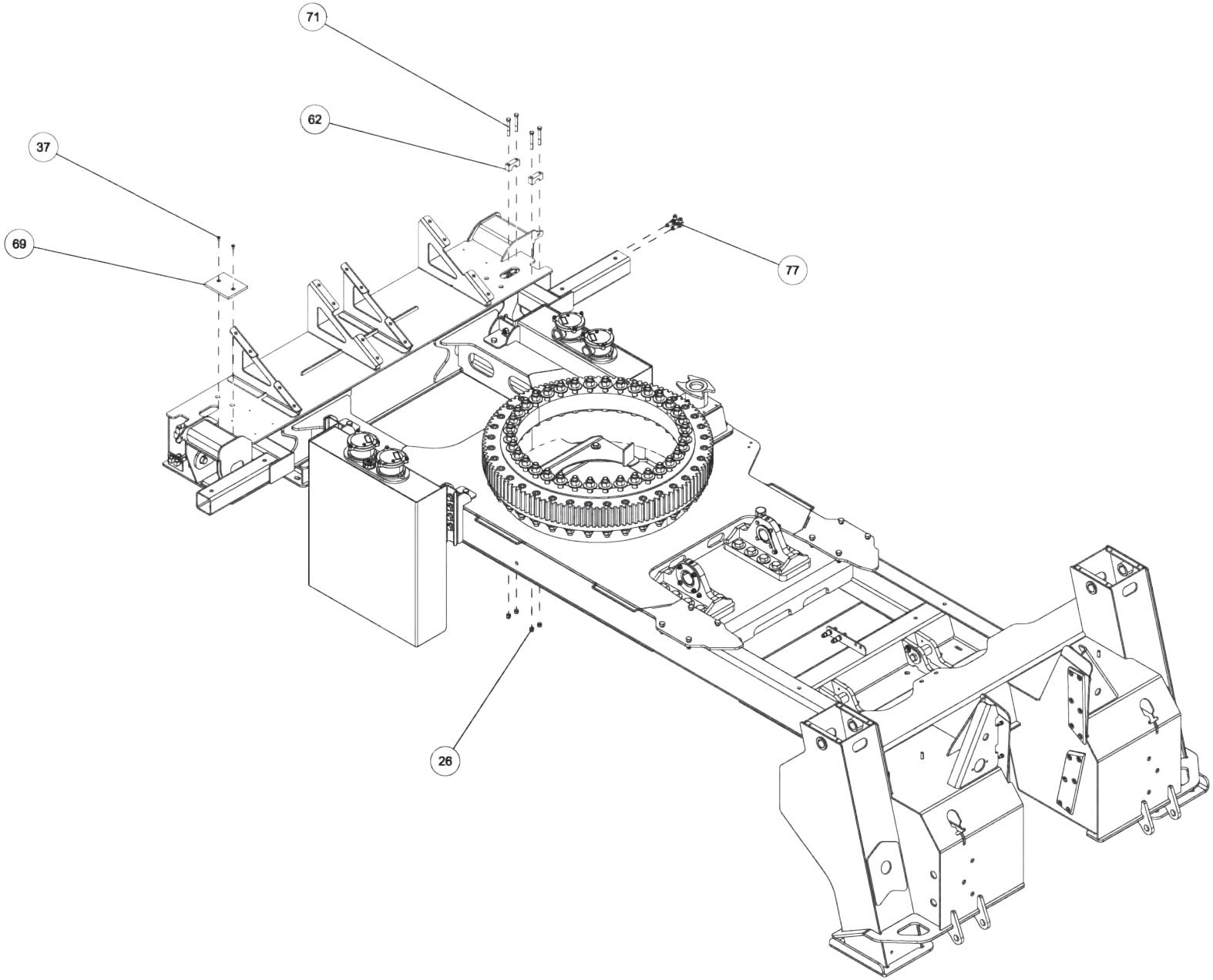

09017869, SUBFRAME ASSEMBLY - 600R KB (cont'd)

ITEM	PART NUMBER	DESCRIPTION	QTY
1	0300113	GREASE FITTING, 1/4-28 STR	2
2	0300188	CLAMP,1-1/2" HOSE	1
3	0300659	HOSE HYD, 45"	2
4	0301895	GREASE FITTING, 1/8 STR PTF	2
5	03021645	HOSE HYD 136 6FJX-6M3K-6FJX90S	4
6	0302575	FITTING-BULKHEAD RUN TEE	2
7	0302757	FITTING, CONN 8MJ - 16MB	3
8	0302850	PLUG 16MB	1
9	0303389	HOSE HYD, 46" LG	2
10	0307650	BEARING ASSY - 55XX	1
11	0307657	HYD HOSE FRT O/R BLKHD-CYL TUB	4
12	0307845	HOSE ASSY - 79"	2
13	0310243	HOSE, 68 6FJX-6M3K-6FJX90S	4
14	0310247	HOSE ASSY, 41"	2
15	0310780	HOSE 45" 8FJX-8M3K-8FJX90S	2
16	0312276	BEARING - BOOM PIVOT	2
17	0400060	SCREW, 1/4-20X1/2 HHC GR5	8
18	0400078	SCREW, 1/4-20X2 HHC GR5	2
19	0400121	SCREW, 3/8-16X3/4 HHC GR5	8
20	0400126	SCREW, 3/8-16X1 HHC GR5	12
21	0400141	SCREW, 3/8-16X7/8 HHC GR5	2
22	0400181	SCREW, 1/2-13X1-1/2 HHC GR5	2
23	0400211	SCREW, 1/2-13X1-3/4 HHC GR5	2
24	0400367	NUT, 1/4-20 LOK	2
25	0400382	NUT, 5/16-18 LOK	34
26	0400392	NUT, 3/8-16 LOK	12
27	0400408	NUT, 1/2-13 LOK	4
28	0400416	NUT, 1/2-13 LOK GR8	28
29	0400431	NUT, 3/4-10 LOK GR8	88
30	0400452	LKWASHER, 1/4	8
31	0400463	WASHER, 5/16	16
32	0400480	WASHER, 3/8	18
33	0400482	LKWASHER, 3/8	22
34	0400490	WASHER, 3/4 GR8	88
35	0400492	USS FLAT WASHER, 1/2	6
36	0400497	WASHER, 1/2 GR8	20
37	0400594	SCREW, 1/4-20X5/8 FHS	4
38	0400633	SCREW, 1/2-13X1-1/2 HHC GR8	8
39	0400642	SCREW, 3/4-10X5-1/2 HHC GR8	16

ITEM	PART NUMBER	DESCRIPTION	QTY
40	0400760	SCREW, 3/4-10X5 SHC	36
41	0400763	SCREW, 3/4-10X5-1/4 HHC GR8	36
42	07022884	PLATE - SLEW LOCK SPACER	1
43	0712380	D-RING	2
44	0725768	RETAINING RING PLATE	2
45	0726045	SPACER - RECOVERY BOOM	2
46	08010330	KNEEBOOM PIVOT	2
47	08014671	TANK MTG BRKT	4
48	08014690	REAR BODY MTG BRKT	2
49	08015252	L-ARM BRKT STOWAGE WLMT (LH)	1
50	08015253	L-ARM BRKT STOWAGE WLMT (RH)	1
51	08015474	600R SUBFRAME WLMT	1
52	09017071	SLEW LOCK ASSY	1
53	09017529	CNTRL VALVE, 8 SPOOL 600R KB	1
54	09017534	CNTRL VALVE, 8 SPOOL 600R KB	1
55	09017893	CONTROL ASSY - RH 600R KB	1
56	28058004	SWING LIMIT CAM WELDMENT	1
57	3012-801000	PIN WELD'- LIFT CYL UP.& LOWER	2
58	3012-980100	HYD. TANK ASSY - 3012	2
59	3116-710025	COVER - JACK LEG	2
60	3116-710026	PLATE, SPACER REAR JACK LEG	1
61	3116-710027	PANEL,BOTTOM SLEW COVER-SUBFRM	2
62	3116-710033	BLOCK, CYLINDER MTG	4
63	3116-912000	LH REAR OUTRIGGER ASSY	1
64	3116-913000	RH REAR OUTRIGGER ASSY	1
65	3116-916000	FRONT OUTRIGGER ASSY	2
66	806030005	LH BOOM GUIDE PAD - BODY ASSY	2
67	806030006	RH BOOM GUIDE PAD - BODY ASSY	2
68	810350002	PIN - UPPER TILT CYL.	2
69	897040002	TOP PAD INNER BOOM	2
70	9041108	5/16 NC X 1 3/4 HHCS PL GR8	10
71	9041212	3/8 NC X 2 3/4 HHCS PL GR8	8
72	9041402	1/2 NC X 1 1/4 HHCS PLT GR8	16
73	9041404	1/2 NC X 1 3/4 HHCS PL GR8	4
74	9043973	5/16-18X1 1/2 FL.HD.SOC.	24
75	9056125	1.25 NOM HVY DUTY RET RING EXT	4
76	BA0259	PIN - "D" RING	2
77	FC41	FITTING-90DEG BLKHD ELB W/ NUT	4

09017869, SUBFRAME ASSEMBLY - 600R KB (cont'd)

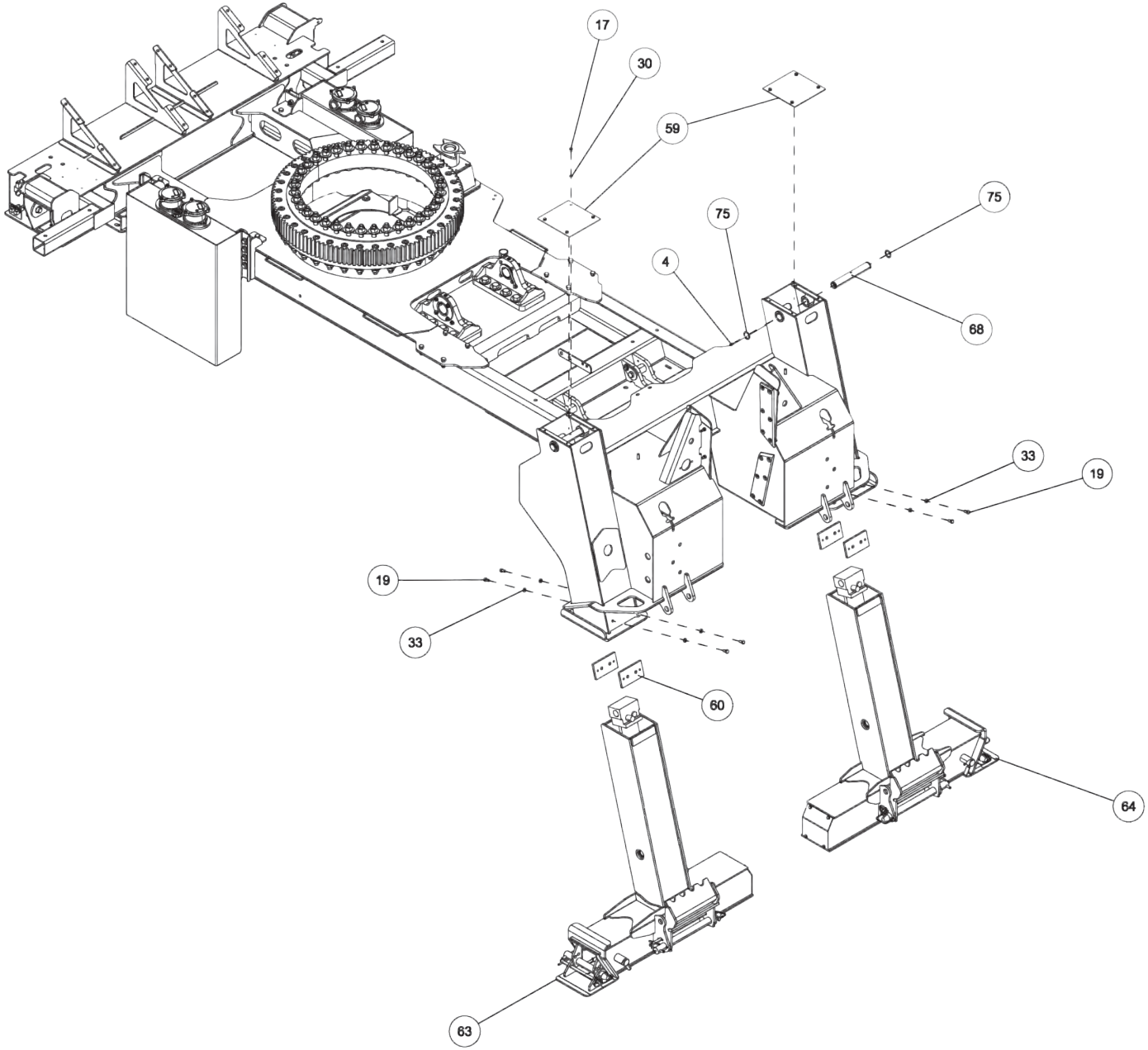

09017869, SUBFRAME ASSEMBLY - 600R KB (cont'd)

ITEM	PART NUMBER	DESCRIPTION	QTY
1	0300113	GREASE FITTING, 1/4-28 STR	2
2	0300188	CLAMP,1-1/2" HOSE	1
3	0300659	HOSE HYD, 45"	2
4	0301895	GREASE FITTING, 1/8 STR PTF	2
5	03021645	HOSE HYD 136 6FJX-6M3K-6FJX90S	4
6	0302575	FITTING-BULKHEAD RUN TEE	2
7	0302757	FITTING, CONN 8MJ - 16MB	3
8	0302850	PLUG 16MB	1
9	0303389	HOSE HYD, 46" LG	2
10	0307650	BEARING ASSY - 55XX	1
11	0307657	HYD HOSE FRT O/R BLKHD-CYL TUB	4
12	0307845	HOSE ASSY - 79"	2
13	0310243	HOSE, 68 6FJX-6M3K-6FJX90S	4
14	0310247	HOSE ASSY, 41"	2
15	0310780	HOSE 45" 8FJX-8M3K-8FJX90S	2
16	0312276	BEARING - BOOM PIVOT	2
17	0400060	SCREW, 1/4-20X1/2 HHC GR5	8
18	0400078	SCREW, 1/4-20X2 HHC GR5	2
19	0400121	SCREW, 3/8-16X3/4 HHC GR5	8
20	0400126	SCREW, 3/8-16X1 HHC GR5	12
21	0400141	SCREW, 3/8-16X7/8 HHC GR5	2
22	0400181	SCREW, 1/2-13X1-1/2 HHC GR5	2
23	0400211	SCREW, 1/2-13X1-3/4 HHC GR5	2
24	0400367	NUT, 1/4-20 LOK	2
25	0400382	NUT, 5/16-18 LOK	34
26	0400392	NUT, 3/8-16 LOK	12
27	0400408	NUT, 1/2-13 LOK	4
28	0400416	NUT, 1/2-13 LOK GR8	28
29	0400431	NUT, 3/4-10 LOK GR8	88
30	0400452	LKWASHER, 1/4	8
31	0400463	WASHER, 5/16	16
32	0400480	WASHER, 3/8	18
33	0400482	LKWASHER, 3/8	22
34	0400490	WASHER, 3/4 GR8	88
35	0400492	USS FLAT WASHER, 1/2	6
36	0400497	WASHER, 1/2 GR8	20
37	0400594	SCREW, 1/4-20X5/8 FHS	4
38	0400633	SCREW, 1/2-13X1-1/2 HHC GR8	8
39	0400642	SCREW, 3/4-10X5-1/2 HHC GR8	16

ITEM	PART NUMBER	DESCRIPTION	QTY
40	0400760	SCREW, 3/4-10X5 SHC	36
41	0400763	SCREW, 3/4-10X5-1/4 HHC GR8	36
42	07022884	PLATE - SLEW LOCK SPACER	1
43	0712380	D-RING	2
44	0725768	RETAINING RING PLATE	2
45	0726045	SPACER - RECOVERY BOOM	2
46	08010330	KNEEBOOM PIVOT	2
47	08014671	TANK MTG BRKT	4
48	08014690	REAR BODY MTG BRKT	2
49	08015252	L-ARM BRKT STOWAGE WLMT (LH)	1
50	08015253	L-ARM BRKT STOWAGE WLMT (RH)	1
51	08015474	600R SUBFRAME WLMT	1
52	09017071	SLEW LOCK ASSY	1
53	09017529	CNTRL VALVE, 8 SPOOL 600R KB	1
54	09017534	CNTRL VALVE, 8 SPOOL 600R KB	1
55	09017893	CONTROL ASSY - RH 600R KB	1
56	28058004	SWING LIMIT CAM WELDMENT	1
57	3012-801000	PIN WELD'- LIFT CYL UP.& LOWER	2
58	3012-980100	HYD. TANK ASSY - 3012	2
59	3116-710025	COVER - JACK LEG	2
60	3116-710026	PLATE, SPACER REAR JACK LEG	1
61	3116-710027	PANEL,BOTTOM SLEW COVER-SUBFRM	2
62	3116-710033	BLOCK, CYLINDER MTG	4
63	3116-912000	LH REAR OUTRIGGER ASSY	1
64	3116-913000	RH REAR OUTRIGGER ASSY	1
65	3116-916000	FRONT OUTRIGGER ASSY	2
66	806030005	LH BOOM GUIDE PAD - BODY ASSY	2
67	806030006	RH BOOM GUIDE PAD - BODY ASSY	2
68	810350002	PIN - UPPER TILT CYL.	2
69	897040002	TOP PAD INNER BOOM	2
70	9041108	5/16 NC X 1 3/4 HHCS PL GR8	10
71	9041212	3/8 NC X 2 3/4 HHCS PL GR8	8
72	9041402	1/2 NC X 1 1/4 HHCS PLT GR8	16
73	9041404	1/2 NC X 1 3/4 HHCS PL GR8	4
74	9043973	5/16-18X1 1/2 FL.HD.SOC.	24
75	9056125	1.25 NOM HVY DUTY RET RING EXT	4
76	BA0259	PIN - "D" RING	2
77	FC41	FITTING-90DEG BLKHD ELB W/ NUT	4

09017869, SUBFRAME ASSEMBLY - 600R KB (cont'd)

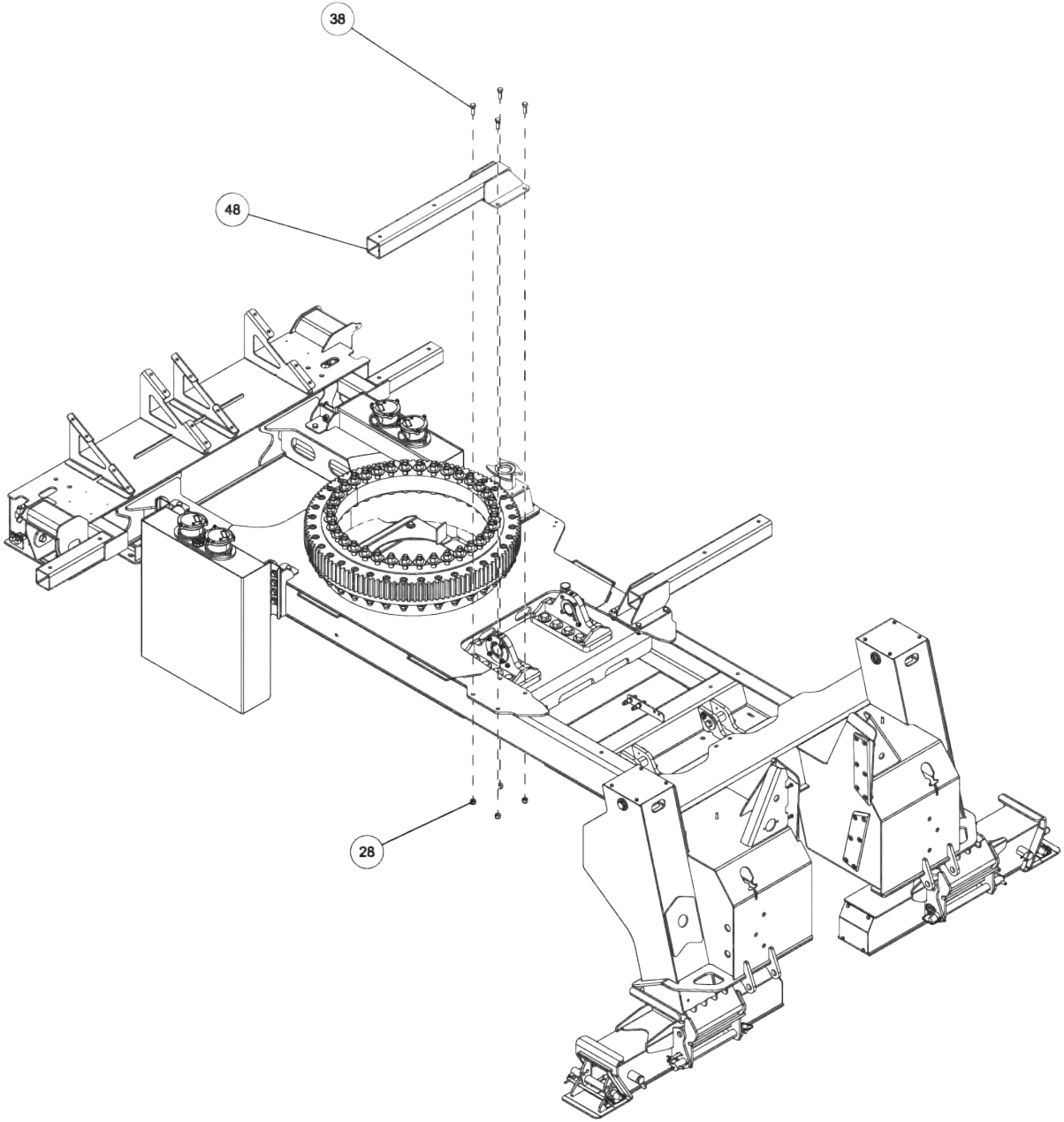

09017869, SUBFRAME ASSEMBLY - 600R KB (cont'd)

ITEM	PART NUMBER	DESCRIPTION	QTY
1	0300113	GREASE FITTING, 1/4-28 STR	2
2	0300188	CLAMP,1-1/2" HOSE	1
3	0300659	HOSE HYD, 45"	2
4	0301895	GREASE FITTING, 1/8 STR PTF	2
5	03021645	HOSE HYD 136 6FJX-6M3K-6FJX90S	4
6	0302575	FITTING-BULKHEAD RUN TEE	2
7	0302757	FITTING, CONN 8MJ - 16MB	3
8	0302850	PLUG 16MB	1
9	0303389	HOSE HYD, 46" LG	2
10	0307650	BEARING ASSY - 55XX	1
11	0307657	HYD HOSE FRT O/R BLKHD-CYL TUB	4
12	0307845	HOSE ASSY - 79"	2
13	0310243	HOSE, 68 6FJX-6M3K-6FJX90S	4
14	0310247	HOSE ASSY, 41"	2
15	0310780	HOSE 45" 8FJX-8M3K-8FJX90S	2
16	0312276	BEARING - BOOM PIVOT	2
17	0400060	SCREW, 1/4-20X1/2 HHC GR5	8
18	0400078	SCREW, 1/4-20X2 HHC GR5	2
19	0400121	SCREW, 3/8-16X3/4 HHC GR5	8
20	0400126	SCREW, 3/8-16X1 HHC GR5	12
21	0400141	SCREW, 3/8-16X7/8 HHC GR5	2
22	0400181	SCREW, 1/2-13X1-1/2 HHC GR5	2
23	0400211	SCREW, 1/2-13X1-3/4 HHC GR5	2
24	0400367	NUT, 1/4-20 LOK	2
25	0400382	NUT, 5/16-18 LOK	34
26	0400392	NUT, 3/8-16 LOK	12
27	0400408	NUT, 1/2-13 LOK	4
28	0400416	NUT, 1/2-13 LOK GR8	28
29	0400431	NUT, 3/4-10 LOK GR8	88
30	0400452	LKWASHER, 1/4	8
31	0400463	WASHER, 5/16	16
32	0400480	WASHER, 3/8	18
33	0400482	LKWASHER, 3/8	22
34	0400490	WASHER, 3/4 GR8	88
35	0400492	USS FLAT WASHER, 1/2	6
36	0400497	WASHER, 1/2 GR8	20
37	0400594	SCREW, 1/4-20X5/8 FHS	4
38	0400633	SCREW, 1/2-13X1-1/2 HHC GR8	8
39	0400642	SCREW, 3/4-10X5-1/2 HHC GR8	16

ITEM	PART NUMBER	DESCRIPTION	QTY
40	0400760	SCREW, 3/4-10X5 SHC	36
41	0400763	SCREW, 3/4-10X5-1/4 HHC GR8	36
42	07022884	PLATE - SLEW LOCK SPACER	1
43	0712380	D-RING	2
44	0725768	RETAINING RING PLATE	2
45	0726045	SPACER - RECOVERY BOOM	2
46	08010330	KNEEBOOM PIVOT	2
47	08014671	TANK MTG BRKT	4
48	08014690	REAR BODY MTG BRKT	2
49	08015252	L-ARM BRKT STOWAGE WLMT (LH)	1
50	08015253	L-ARM BRKT STOWAGE WLMT (RH)	1
51	08015474	600R SUBFRAME WLMT	1
52	09017071	SLEW LOCK ASSY	1
53	09017529	CNTRL VALVE, 8 SPOOL 600R KB	1
54	09017534	CNTRL VALVE, 8 SPOOL 600R KB	1
55	09017893	CONTROL ASSY - RH 600R KB	1
56	28058004	SWING LIMIT CAM WELDMENT	1
57	3012-801000	PIN WELD'- LIFT CYL UP.& LOWER	2
58	3012-980100	HYD. TANK ASSY - 3012	2
59	3116-710025	COVER - JACK LEG	2
60	3116-710026	PLATE, SPACER REAR JACK LEG	1
61	3116-710027	PANEL,BOTTOM SLEW COVER-SUBFRM	2
62	3116-710033	BLOCK, CYLINDER MTG	4
63	3116-912000	LH REAR OUTRIGGER ASSY	1
64	3116-913000	RH REAR OUTRIGGER ASSY	1
65	3116-916000	FRONT OUTRIGGER ASSY	2
66	806030005	LH BOOM GUIDE PAD - BODY ASSY	2
67	806030006	RH BOOM GUIDE PAD - BODY ASSY	2
68	810350002	PIN - UPPER TILT CYL.	2
69	897040002	TOP PAD INNER BOOM	2
70	9041108	5/16 NC X 1 3/4 HHCS PL GR8	10
71	9041212	3/8 NC X 2 3/4 HHCS PL GR8	8
72	9041402	1/2 NC X 1 1/4 HHCS PLT GR8	16
73	9041404	1/2 NC X 1 3/4 HHCS PL GR8	4
74	9043973	5/16-18X1 1/2 FL.HD.SOC.	24
75	9056125	1.25 NOM HVY DUTY RET RING EXT	4
76	BA0259	PIN - "D" RING	2
77	FC41	FITTING-90DEG BLKHD ELB W/ NUT	4

09017869, SUBFRAME ASSEMBLY - 600R KB (cont'd)

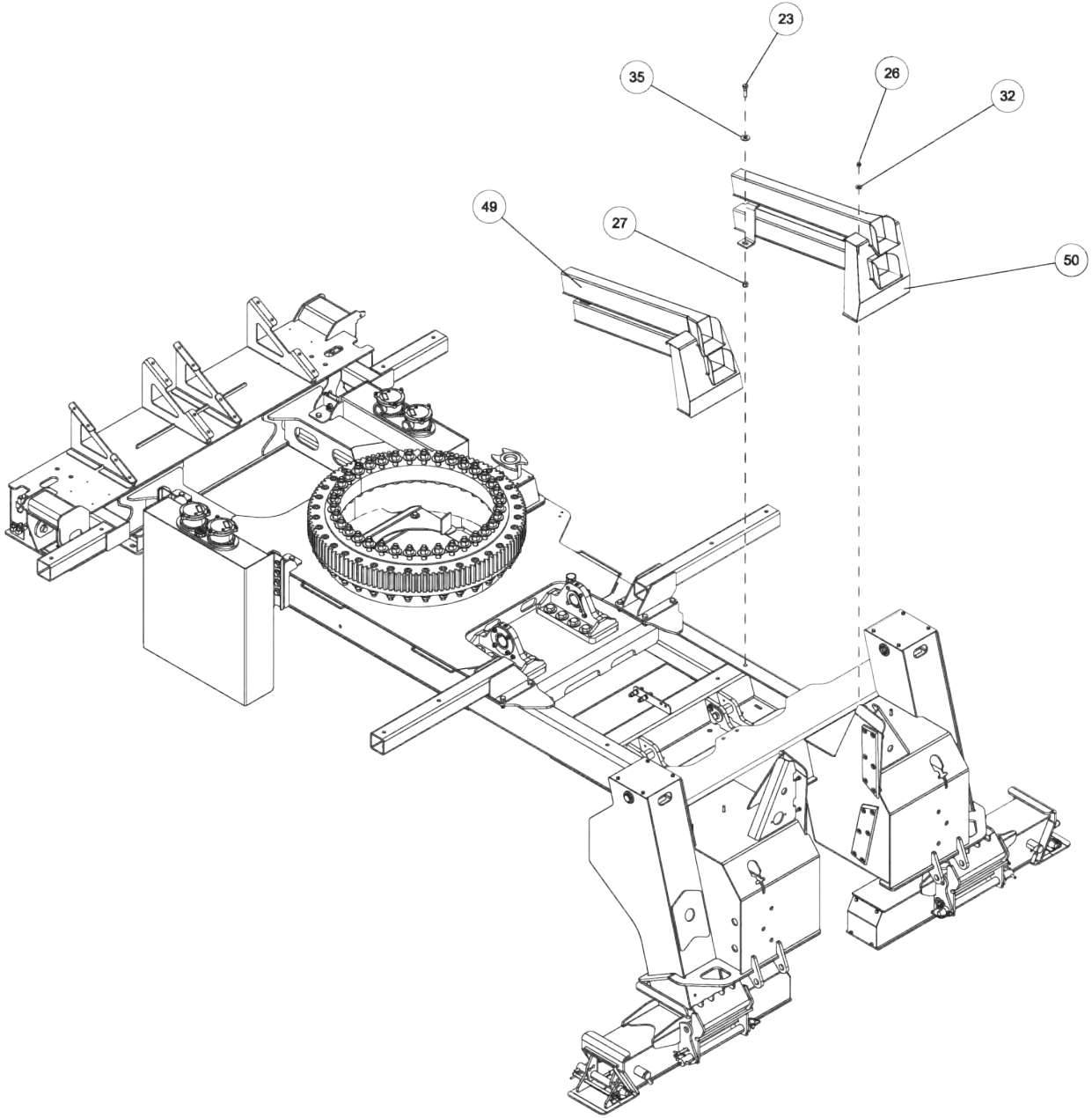

09017869, SUBFRAME ASSEMBLY - 600R KB (cont'd)

ITEM	PART NUMBER	DESCRIPTION	QTY
1	0300113	GREASE FITTING, 1/4-28 STR	2
2	0300188	CLAMP,1-1/2" HOSE	1
3	0300659	HOSE HYD, 45"	2
4	0301895	GREASE FITTING, 1/8 STR PTF	2
5	03021645	HOSE HYD 136 6FJX-6M3K-6FJX90S	4
6	0302575	FITTING-BULKHEAD RUN TEE	2
7	0302757	FITTING, CONN 8MJ - 16MB	3
8	0302850	PLUG 16MB	1
9	0303389	HOSE HYD, 46" LG	2
10	0307650	BEARING ASSY - 55XX	1
11	0307657	HYD HOSE FRT O/R BLKHD-CYL TUB	4
12	0307845	HOSE ASSY - 79"	2
13	0310243	HOSE, 68 6FJX-6M3K-6FJX90S	4
14	0310247	HOSE ASSY, 41"	2
15	0310780	HOSE 45" 8FJX-8M3K-8FJX90S	2
16	0312276	BEARING - BOOM PIVOT	2
17	0400060	SCREW, 1/4-20X1/2 HHC GR5	8
18	0400078	SCREW, 1/4-20X2 HHC GR5	2
19	0400121	SCREW, 3/8-16X3/4 HHC GR5	8
20	0400126	SCREW, 3/8-16X1 HHC GR5	12
21	0400141	SCREW, 3/8-16X7/8 HHC GR5	2
22	0400181	SCREW, 1/2-13X1-1/2 HHC GR5	2
23	0400211	SCREW, 1/2-13X1-3/4 HHC GR5	2
24	0400367	NUT, 1/4-20 LOK	2
25	0400382	NUT, 5/16-18 LOK	34
26	0400392	NUT, 3/8-16 LOK	12
27	0400408	NUT, 1/2-13 LOK	4
28	0400416	NUT, 1/2-13 LOK GR8	28
29	0400431	NUT, 3/4-10 LOK GR8	88
30	0400452	LKWASHER, 1/4	8
31	0400463	WASHER, 5/16	16
32	0400480	WASHER, 3/8	18
33	0400482	LKWASHER, 3/8	22
34	0400490	WASHER, 3/4 GR8	88
35	0400492	USS FLAT WASHER, 1/2	6
36	0400497	WASHER, 1/2 GR8	20
37	0400594	SCREW, 1/4-20X5/8 FHS	4
38	0400633	SCREW, 1/2-13X1-1/2 HHC GR8	8
39	0400642	SCREW, 3/4-10X5-1/2 HHC GR8	16

ITEM	PART NUMBER	DESCRIPTION	QTY
40	0400760	SCREW, 3/4-10X5 SHC	36
41	0400763	SCREW, 3/4-10X5-1/4 HHC GR8	36
42	07022884	PLATE - SLEW LOCK SPACER	1
43	0712380	D-RING	2
44	0725768	RETAINING RING PLATE	2
45	0726045	SPACER - RECOVERY BOOM	2
46	08010330	KNEEBOOM PIVOT	2
47	08014671	TANK MTG BRKT	4
48	08014690	REAR BODY MTG BRKT	2
49	08015252	L-ARM BRKT STOWAGE WLMT (LH)	1
50	08015253	L-ARM BRKT STOWAGE WLMT (RH)	1
51	08015474	600R SUBFRAME WLMT	1
52	09017071	SLEW LOCK ASSY	1
53	09017529	CNTRL VALVE, 8 SPOOL 600R KB	1
54	09017534	CNTRL VALVE, 8 SPOOL 600R KB	1
55	09017893	CONTROL ASSY - RH 600R KB	1
56	28058004	SWING LIMIT CAM WELDMENT	1
57	3012-801000	PIN WELD'- LIFT CYL UP.& LOWER	2
58	3012-980100	HYD. TANK ASSY - 3012	2
59	3116-710025	COVER - JACK LEG	2
60	3116-710026	PLATE, SPACER REAR JACK LEG	1
61	3116-710027	PANEL,BOTTOM SLEW COVER-SUBFRM	2
62	3116-710033	BLOCK, CYLINDER MTG	4
63	3116-912000	LH REAR OUTRIGGER ASSY	1
64	3116-913000	RH REAR OUTRIGGER ASSY	1
65	3116-916000	FRONT OUTRIGGER ASSY	2
66	806030005	LH BOOM GUIDE PAD - BODY ASSY	2
67	806030006	RH BOOM GUIDE PAD - BODY ASSY	2
68	810350002	PIN - UPPER TILT CYL.	2
69	897040002	TOP PAD INNER BOOM	2
70	9041108	5/16 NC X 1 3/4 HHCS PL GR8	10
71	9041212	3/8 NC X 2 3/4 HHCS PL GR8	8
72	9041402	1/2 NC X 1 1/4 HHCS PLT GR8	16
73	9041404	1/2 NC X 1 3/4 HHCS PL GR8	4
74	9043973	5/16-18X1 1/2 FL.HD.SOC.	24
75	9056125	1.25 NOM HVY DUTY RET RING EXT	4
76	BA0259	PIN - "D" RING	2
77	FC41	FITTING-90DEG BLKHD ELB W/ NUT	4

09017869, SUBFRAME ASSEMBLY - 600R KB (cont'd)

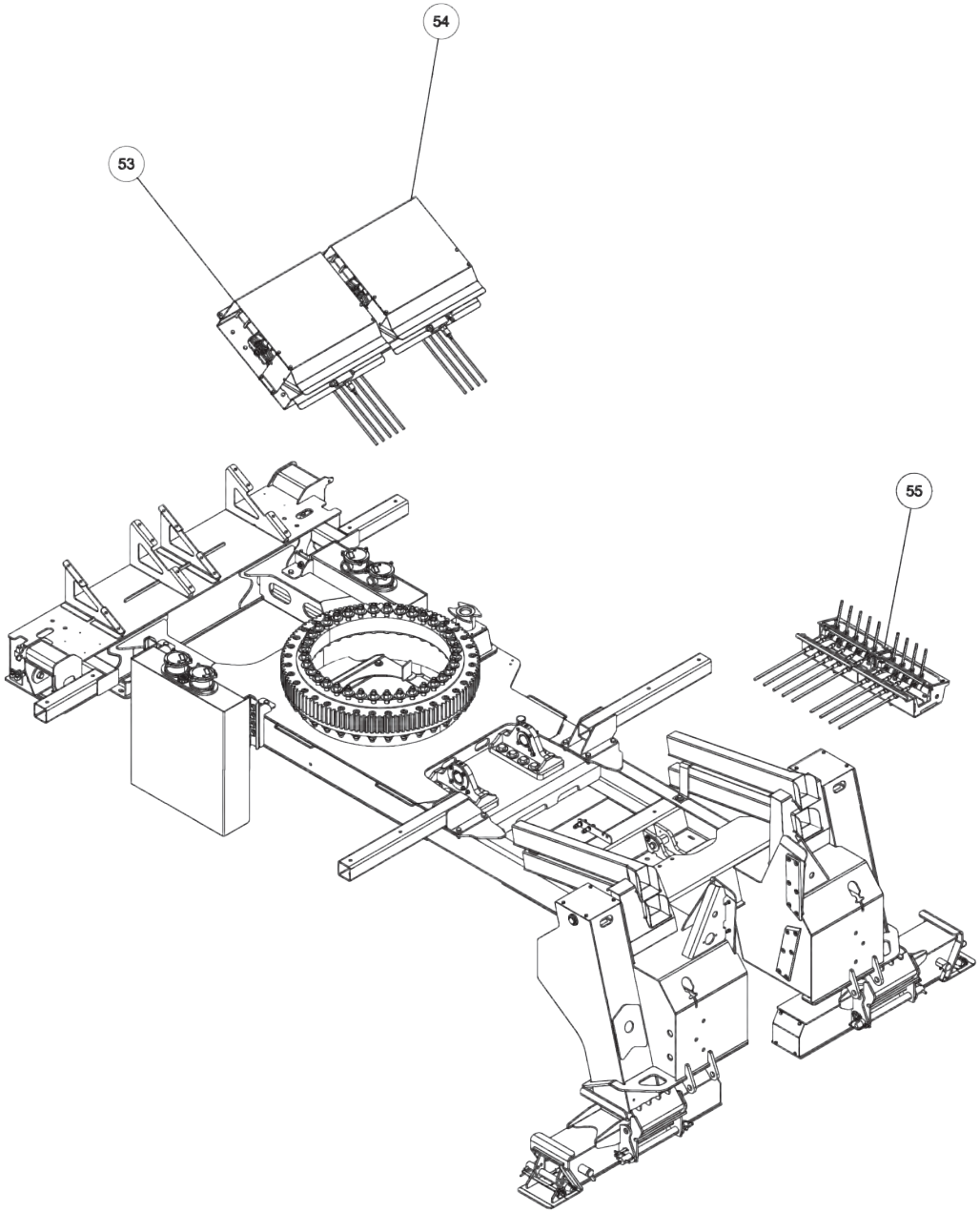

09017869, SUBFRAME ASSEMBLY - 600R KB (cont'd)

ITEM	PART NUMBER	DESCRIPTION	QTY
1	0300113	GREASE FITTING, 1/4-28 STR	2
2	0300188	CLAMP,1-1/2" HOSE	1
3	0300659	HOSE HYD, 45"	2
4	0301895	GREASE FITTING, 1/8 STR PTF	2
5	03021645	HOSE HYD 136 6FJX-6M3K-6FJX90S	4
6	0302575	FITTING-BULKHEAD RUN TEE	2
7	0302757	FITTING, CONN 8MJ - 16MB	3
8	0302850	PLUG 16MB	1
9	0303389	HOSE HYD, 46" LG	2
10	0307650	BEARING ASSY - 55XX	1
11	0307657	HYD HOSE FRT O/R BLKHD-CYL TUB	4
12	0307845	HOSE ASSY - 79"	2
13	0310243	HOSE, 68 6FJX-6M3K-6FJX90S	4
14	0310247	HOSE ASSY, 41"	2
15	0310780	HOSE 45" 8FJX-8M3K-8FJX90S	2
16	0312276	BEARING - BOOM PIVOT	2
17	0400060	SCREW, 1/4-20X1/2 HHC GR5	8
18	0400078	SCREW, 1/4-20X2 HHC GR5	2
19	0400121	SCREW, 3/8-16X3/4 HHC GR5	8
20	0400126	SCREW, 3/8-16X1 HHC GR5	12
21	0400141	SCREW, 3/8-16X7/8 HHC GR5	2
22	0400181	SCREW, 1/2-13X1-1/2 HHC GR5	2
23	0400211	SCREW, 1/2-13X1-3/4 HHC GR5	2
24	0400367	NUT, 1/4-20 LOK	2
25	0400382	NUT, 5/16-18 LOK	34
26	0400392	NUT, 3/8-16 LOK	12
27	0400408	NUT, 1/2-13 LOK	4
28	0400416	NUT, 1/2-13 LOK GR8	28
29	0400431	NUT, 3/4-10 LOK GR8	88
30	0400452	LKWASHER, 1/4	8
31	0400463	WASHER, 5/16	16
32	0400480	WASHER, 3/8	18
33	0400482	LKWASHER, 3/8	22
34	0400490	WASHER, 3/4 GR8	88
35	0400492	USS FLAT WASHER, 1/2	6
36	0400497	WASHER, 1/2 GR8	20
37	0400594	SCREW, 1/4-20X5/8 FHS	4
38	0400633	SCREW, 1/2-13X1-1/2 HHC GR8	8
39	0400642	SCREW, 3/4-10X5-1/2 HHC GR8	16

ITEM	PART NUMBER	DESCRIPTION	QTY
40	0400760	SCREW, 3/4-10X5 SHC	36
41	0400763	SCREW, 3/4-10X5-1/4 HHC GR8	36
42	07022884	PLATE - SLEW LOCK SPACER	1
43	0712380	D-RING	2
44	0725768	RETAINING RING PLATE	2
45	0726045	SPACER - RECOVERY BOOM	2
46	08010330	KNEEBOOM PIVOT	2
47	08014671	TANK MTG BRKT	4
48	08014690	REAR BODY MTG BRKT	2
49	08015252	L-ARM BRKT STOWAGE WLMT (LH)	1
50	08015253	L-ARM BRKT STOWAGE WLMT (RH)	1
51	08015474	600R SUBFRAME WLMT	1
52	09017071	SLEW LOCK ASSY	1
53	09017529	CNTRL VALVE, 8 SPOOL 600R KB	1
54	09017534	CNTRL VALVE, 8 SPOOL 600R KB	1
55	09017893	CONTROL ASSY - RH 600R KB	1
56	28058004	SWING LIMIT CAM WELDMENT	1
57	3012-801000	PIN WELD'- LIFT CYL UP.& LOWER	2
58	3012-980100	HYD. TANK ASSY - 3012	2
59	3116-710025	COVER - JACK LEG	2
60	3116-710026	PLATE, SPACER REAR JACK LEG	1
61	3116-710027	PANEL,BOTTOM SLEW COVER-SUBFRM	2
62	3116-710033	BLOCK, CYLINDER MTG	4
63	3116-912000	LH REAR OUTRIGGER ASSY	1
64	3116-913000	RH REAR OUTRIGGER ASSY	1
65	3116-916000	FRONT OUTRIGGER ASSY	2
66	806030005	LH BOOM GUIDE PAD - BODY ASSY	2
67	806030006	RH BOOM GUIDE PAD - BODY ASSY	2
68	810350002	PIN - UPPER TILT CYL.	2
69	897040002	TOP PAD INNER BOOM	2
70	9041108	5/16 NC X 1 3/4 HHCS PL GR8	10
71	9041212	3/8 NC X 2 3/4 HHCS PL GR8	8
72	9041402	1/2 NC X 1 1/4 HHCS PLT GR8	16
73	9041404	1/2 NC X 1 3/4 HHCS PL GR8	4
74	9043973	5/16-18X1 1/2 FL.HD.SOC.	24
75	9056125	1.25 NOM HVY DUTY RET RING EXT	4
76	BA0259	PIN - "D" RING	2
77	FC41	FITTING-90DEG BLKHD ELB W/ NUT	4

09017869, SUBFRAME ASSEMBLY - 600R KB (cont'd)

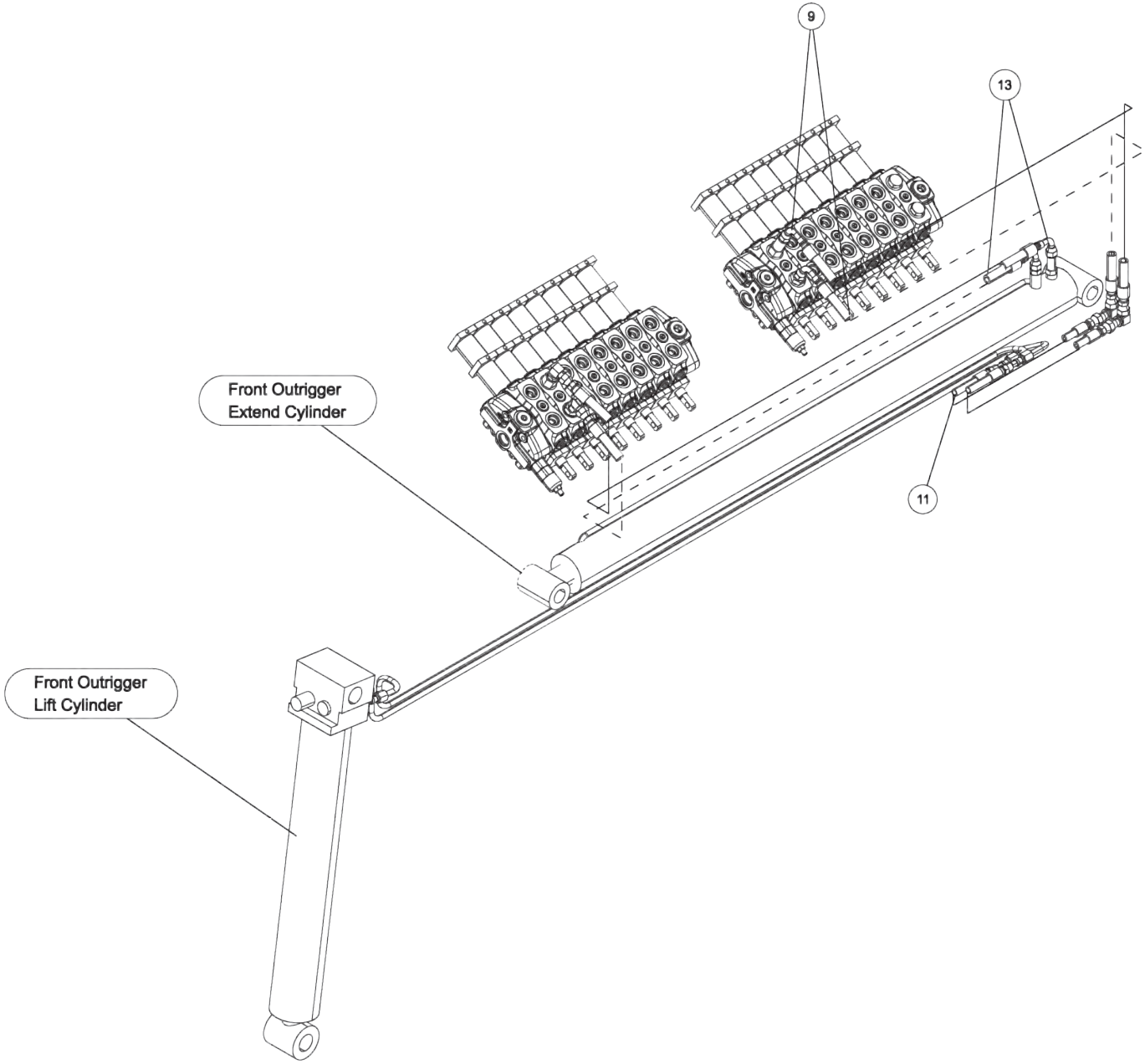

09017869, SUBFRAME ASSEMBLY - 600R KB (cont'd)

ITEM	PART NUMBER	DESCRIPTION	QTY
1	0300113	GREASE FITTING, 1/4-28 STR	2
2	0300188	CLAMP,1-1/2" HOSE	1
3	0300659	HOSE HYD, 45"	2
4	0301895	GREASE FITTING, 1/8 STR PTF	2
5	03021645	HOSE HYD 136 6FJX-6M3K-6FJX90S	4
6	0302575	FITTING-BULKHEAD RUN TEE	2
7	0302757	FITTING, CONN 8MJ - 16MB	3
8	0302850	PLUG 16MB	1
9	0303389	HOSE HYD, 46" LG	2
10	0307650	BEARING ASSY - 55XX	1
11	0307657	HYD HOSE FRT O/R BLKHD-CYL TUB	4
12	0307845	HOSE ASSY - 79"	2
13	0310243	HOSE, 68 6FJX-6M3K-6FJX90S	4
14	0310247	HOSE ASSY, 41"	2
15	0310780	HOSE 45" 8FJX-8M3K-8FJX90S	2
16	0312276	BEARING - BOOM PIVOT	2
17	0400060	SCREW, 1/4-20X1/2 HHC GR5	8
18	0400078	SCREW, 1/4-20X2 HHC GR5	2
19	0400121	SCREW, 3/8-16X3/4 HHC GR5	8
20	0400126	SCREW, 3/8-16X1 HHC GR5	12
21	0400141	SCREW, 3/8-16X7/8 HHC GR5	2
22	0400181	SCREW, 1/2-13X1-1/2 HHC GR5	2
23	0400211	SCREW, 1/2-13X1-3/4 HHC GR5	2
24	0400367	NUT, 1/4-20 LOK	2
25	0400382	NUT, 5/16-18 LOK	34
26	0400392	NUT, 3/8-16 LOK	12
27	0400408	NUT, 1/2-13 LOK	4
28	0400416	NUT, 1/2-13 LOK GR8	28
29	0400431	NUT, 3/4-10 LOK GR8	88
30	0400452	LKWASHER, 1/4	8
31	0400463	WASHER, 5/16	16
32	0400480	WASHER, 3/8	18
33	0400482	LKWASHER, 3/8	22
34	0400490	WASHER, 3/4 GR8	88
35	0400492	USS FLAT WASHER, 1/2	6
36	0400497	WASHER, 1/2 GR8	20
37	0400594	SCREW, 1/4-20X5/8 FHS	4
38	0400633	SCREW, 1/2-13X1-1/2 HHC GR8	8
39	0400642	SCREW, 3/4-10X5-1/2 HHC GR8	16

ITEM	PART NUMBER	DESCRIPTION	QTY
40	0400760	SCREW, 3/4-10X5 SHC	36
41	0400763	SCREW, 3/4-10X5-1/4 HHC GR8	36
42	07022884	PLATE - SLEW LOCK SPACER	1
43	0712380	D-RING	2
44	0725768	RETAINING RING PLATE	2
45	0726045	SPACER - RECOVERY BOOM	2
46	08010330	KNEEBOOM PIVOT	2
47	08014671	TANK MTG BRKT	4
48	08014690	REAR BODY MTG BRKT	2
49	08015252	L-ARM BRKT STOWAGE WLMT (LH)	1
50	08015253	L-ARM BRKT STOWAGE WLMT (RH)	1
51	08015474	600R SUBFRAME WLMT	1
52	09017071	SLEW LOCK ASSY	1
53	09017529	CNTRL VALVE, 8 SPOOL 600R KB	1
54	09017534	CNTRL VALVE, 8 SPOOL 600R KB	1
55	09017893	CONTROL ASSY - RH 600R KB	1
56	28058004	SWING LIMIT CAM WELDMENT	1
57	3012-801000	PIN WELD'- LIFT CYL UP.& LOWER	2
58	3012-980100	HYD. TANK ASSY - 3012	2
59	3116-710025	COVER - JACK LEG	2
60	3116-710026	PLATE, SPACER REAR JACK LEG	1
61	3116-710027	PANEL,BOTTOM SLEW COVER-SUBFRM	2
62	3116-710033	BLOCK, CYLINDER MTG	4
63	3116-912000	LH REAR OUTRIGGER ASSY	1
64	3116-913000	RH REAR OUTRIGGER ASSY	1
65	3116-916000	FRONT OUTRIGGER ASSY	2
66	806030005	LH BOOM GUIDE PAD - BODY ASSY	2
67	806030006	RH BOOM GUIDE PAD - BODY ASSY	2
68	810350002	PIN - UPPER TILT CYL.	2
69	897040002	TOP PAD INNER BOOM	2
70	9041108	5/16 NC X 1 3/4 HHCS PL GR8	10
71	9041212	3/8 NC X 2 3/4 HHCS PL GR8	8
72	9041402	1/2 NC X 1 1/4 HHCS PLT GR8	16
73	9041404	1/2 NC X 1 3/4 HHCS PL GR8	4
74	9043973	5/16-18X1 1/2 FL.HD.SOC.	24
75	9056125	1.25 NOM HVY DUTY RET RING EXT	4
76	BA0259	PIN - "D" RING	2
77	FC41	FITTING-90DEG BLKHD ELB W/ NUT	4

09017869, SUBFRAME ASSEMBLY - 600R KB (cont'd)

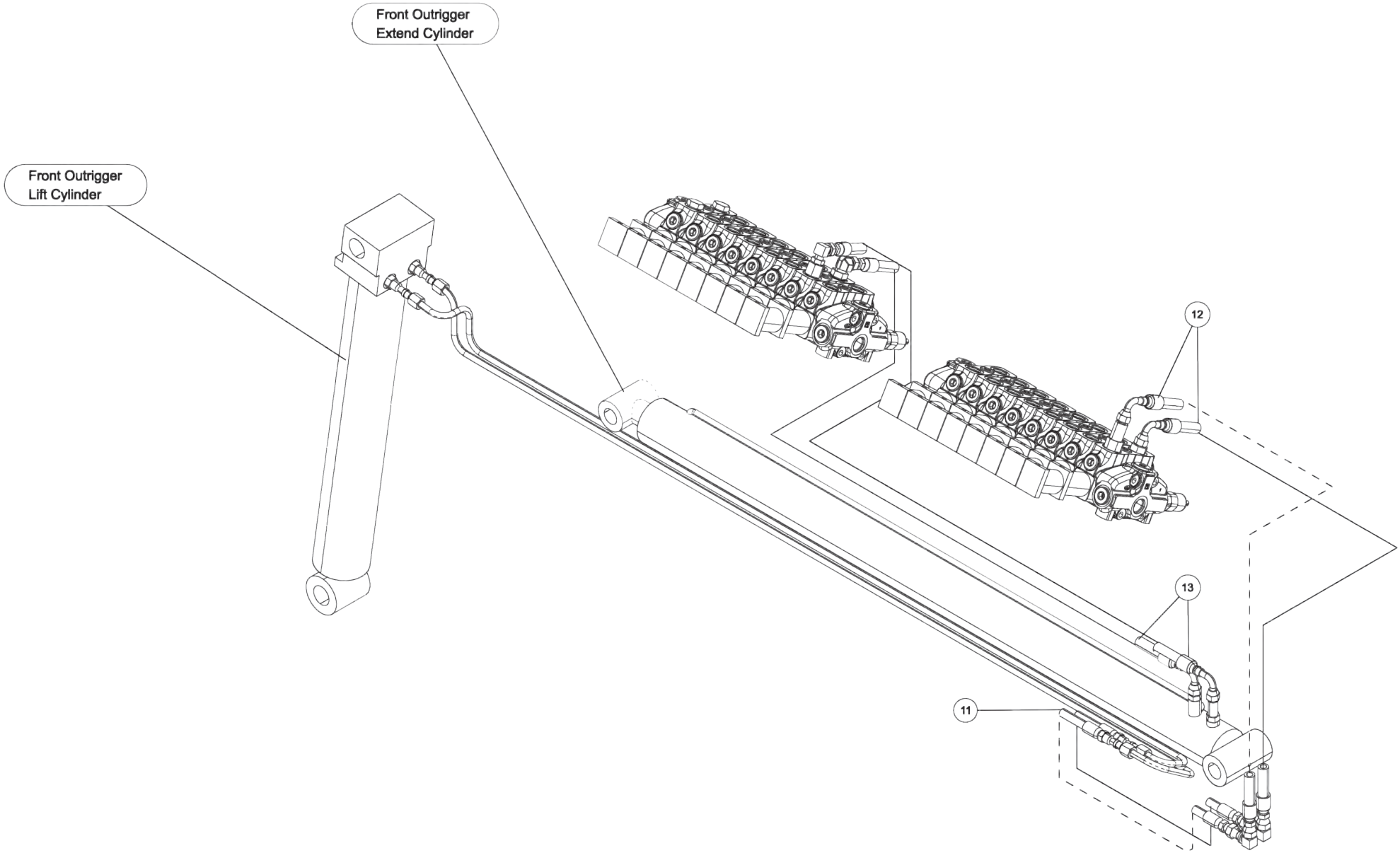

09017869, SUBFRAME ASSEMBLY - 600R KB (cont'd)

ITEM	PART NUMBER	DESCRIPTION	QTY
1	0300113	GREASE FITTING, 1/4-28 STR	2
2	0300188	CLAMP,1-1/2" HOSE	1
3	0300659	HOSE HYD, 45"	2
4	0301895	GREASE FITTING, 1/8 STR PTF	2
5	03021645	HOSE HYD 136 6FJX-6M3K-6FJX90S	4
6	0302575	FITTING-BULKHEAD RUN TEE	2
7	0302757	FITTING, CONN 8MJ - 16MB	3
8	0302850	PLUG 16MB	1
9	0303389	HOSE HYD, 46" LG	2
10	0307650	BEARING ASSY - 55XX	1
11	0307657	HYD HOSE FRT O/R BLKHD-CYL TUB	4
12	0307845	HOSE ASSY - 79"	2
13	0310243	HOSE, 68 6FJX-6M3K-6FJX90S	4
14	0310247	HOSE ASSY, 41"	2
15	0310780	HOSE 45" 8FJX-8M3K-8FJX90S	2
16	0312276	BEARING - BOOM PIVOT	2
17	0400060	SCREW, 1/4-20X1/2 HHC GR5	8
18	0400078	SCREW, 1/4-20X2 HHC GR5	2
19	0400121	SCREW, 3/8-16X3/4 HHC GR5	8
20	0400126	SCREW, 3/8-16X1 HHC GR5	12
21	0400141	SCREW, 3/8-16X7/8 HHC GR5	2
22	0400181	SCREW, 1/2-13X1-1/2 HHC GR5	2
23	0400211	SCREW, 1/2-13X1-3/4 HHC GR5	2
24	0400367	NUT, 1/4-20 LOK	2
25	0400382	NUT, 5/16-18 LOK	34
26	0400392	NUT, 3/8-16 LOK	12
27	0400408	NUT, 1/2-13 LOK	4
28	0400416	NUT, 1/2-13 LOK GR8	28
29	0400431	NUT, 3/4-10 LOK GR8	88
30	0400452	LKWASHER, 1/4	8
31	0400463	WASHER, 5/16	16
32	0400480	WASHER, 3/8	18
33	0400482	LKWASHER, 3/8	22
34	0400490	WASHER, 3/4 GR8	88
35	0400492	USS FLAT WASHER, 1/2	6
36	0400497	WASHER, 1/2 GR8	20
37	0400594	SCREW, 1/4-20X5/8 FHS	4
38	0400633	SCREW, 1/2-13X1-1/2 HHC GR8	8
39	0400642	SCREW, 3/4-10X5-1/2 HHC GR8	16

ITEM	PART NUMBER	DESCRIPTION	QTY
40	0400760	SCREW, 3/4-10X5 SHC	36
41	0400763	SCREW, 3/4-10X5-1/4 HHC GR8	36
42	07022884	PLATE - SLEW LOCK SPACER	1
43	0712380	D-RING	2
44	0725768	RETAINING RING PLATE	2
45	0726045	SPACER - RECOVERY BOOM	2
46	08010330	KNEEBOOM PIVOT	2
47	08014671	TANK MTG BRKT	4
48	08014690	REAR BODY MTG BRKT	2
49	08015252	L-ARM BRKT STOWAGE WLMT (LH)	1
50	08015253	L-ARM BRKT STOWAGE WLMT (RH)	1
51	08015474	600R SUBFRAME WLMT	1
52	09017071	SLEW LOCK ASSY	1
53	09017529	CNTRL VALVE, 8 SPOOL 600R KB	1
54	09017534	CNTRL VALVE, 8 SPOOL 600R KB	1
55	09017893	CONTROL ASSY - RH 600R KB	1
56	28058004	SWING LIMIT CAM WELDMENT	1
57	3012-801000	PIN WELD'- LIFT CYL UP.& LOWER	2
58	3012-980100	HYD. TANK ASSY - 3012	2
59	3116-710025	COVER - JACK LEG	2
60	3116-710026	PLATE, SPACER REAR JACK LEG	1
61	3116-710027	PANEL,BOTTOM SLEW COVER-SUBFRM	2
62	3116-710033	BLOCK, CYLINDER MTG	4
63	3116-912000	LH REAR OUTRIGGER ASSY	1
64	3116-913000	RH REAR OUTRIGGER ASSY	1
65	3116-916000	FRONT OUTRIGGER ASSY	2
66	806030005	LH BOOM GUIDE PAD - BODY ASSY	2
67	806030006	RH BOOM GUIDE PAD - BODY ASSY	2
68	810350002	PIN - UPPER TILT CYL.	2
69	897040002	TOP PAD INNER BOOM	2
70	9041108	5/16 NC X 1 3/4 HHCS PL GR8	10
71	9041212	3/8 NC X 2 3/4 HHCS PL GR8	8
72	9041402	1/2 NC X 1 1/4 HHCS PLT GR8	16
73	9041404	1/2 NC X 1 3/4 HHCS PL GR8	4
74	9043973	5/16-18X1 1/2 FL.HD.SOC.	24
75	9056125	1.25 NOM HVY DUTY RET RING EXT	4
76	BA0259	PIN - "D" RING	2
77	FC41	FITTING-90DEG BLKHD ELB W/ NUT	4

09017869, SUBFRAME ASSEMBLY - 600R KB (cont'd)

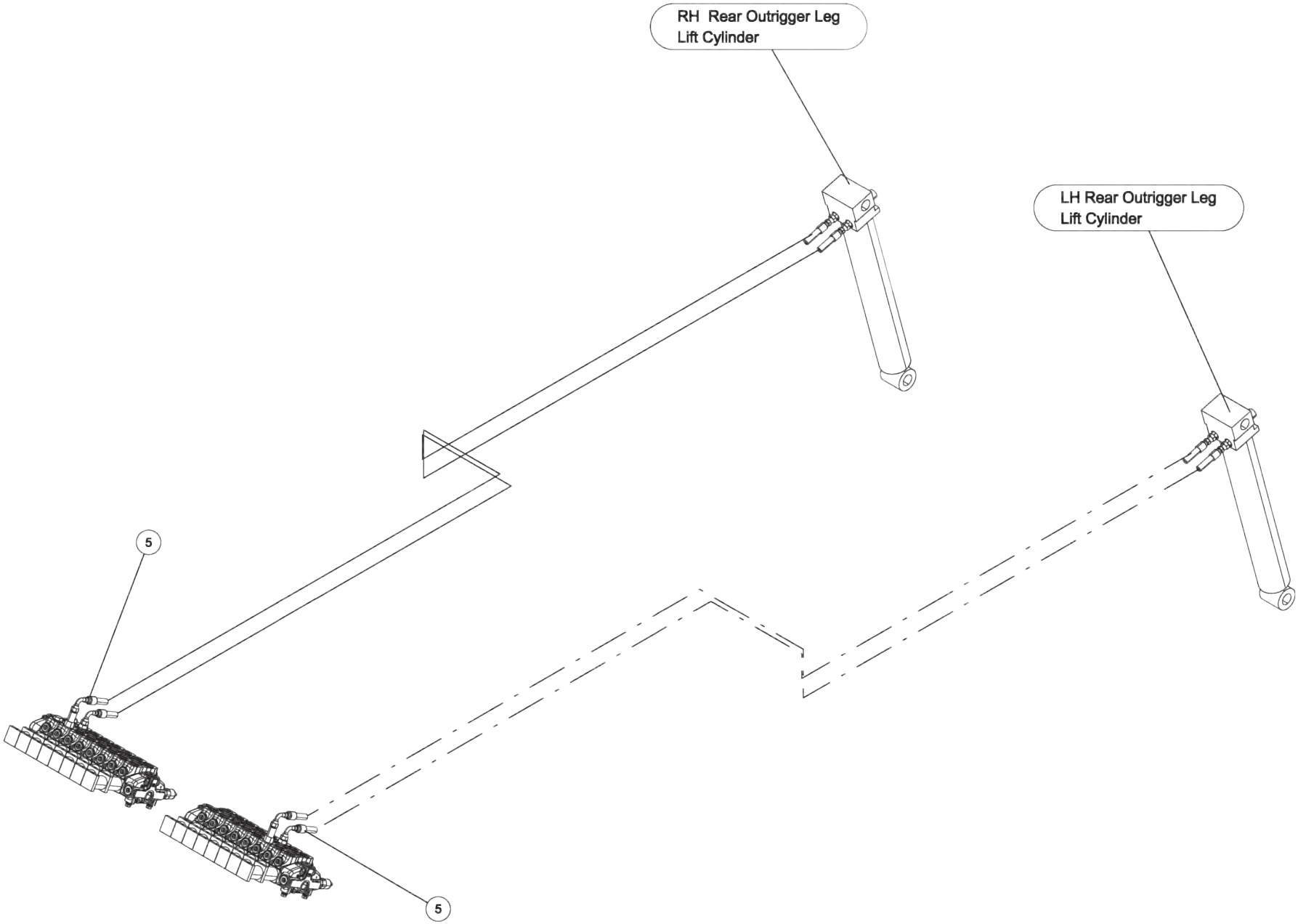

09017869, SUBFRAME ASSEMBLY - 600R KB (cont'd)

ITEM	PART NUMBER	DESCRIPTION	QTY
1	0300113	GREASE FITTING, 1/4-28 STR	2
2	0300188	CLAMP,1-1/2" HOSE	1
3	0300659	HOSE HYD, 45"	2
4	0301895	GREASE FITTING, 1/8 STR PTF	2
5	03021645	HOSE HYD 136 6FJX-6M3K-6FJX90S	4
6	0302575	FITTING-BULKHEAD RUN TEE	2
7	0302757	FITTING, CONN 8MJ - 16MB	3
8	0302850	PLUG 16MB	1
9	0303389	HOSE HYD, 46" LG	2
10	0307650	BEARING ASSY - 55XX	1
11	0307657	HYD HOSE FRT O/R BLKHD-CYL TUB	4
12	0307845	HOSE ASSY - 79"	2
13	0310243	HOSE, 68 6FJX-6M3K-6FJX90S	4
14	0310247	HOSE ASSY, 41"	2
15	0310780	HOSE 45" 8FJX-8M3K-8FJX90S	2
16	0312276	BEARING - BOOM PIVOT	2
17	0400060	SCREW, 1/4-20X1/2 HHC GR5	8
18	0400078	SCREW, 1/4-20X2 HHC GR5	2
19	0400121	SCREW, 3/8-16X3/4 HHC GR5	8
20	0400126	SCREW, 3/8-16X1 HHC GR5	12
21	0400141	SCREW, 3/8-16X7/8 HHC GR5	2
22	0400181	SCREW, 1/2-13X1-1/2 HHC GR5	2
23	0400211	SCREW, 1/2-13X1-3/4 HHC GR5	2
24	0400367	NUT, 1/4-20 LOK	2
25	0400382	NUT, 5/16-18 LOK	34
26	0400392	NUT, 3/8-16 LOK	12
27	0400408	NUT, 1/2-13 LOK	4
28	0400416	NUT, 1/2-13 LOK GR8	28
29	0400431	NUT, 3/4-10 LOK GR8	88
30	0400452	LKWASHER, 1/4	8
31	0400463	WASHER, 5/16	16
32	0400480	WASHER, 3/8	18
33	0400482	LKWASHER, 3/8	22
34	0400490	WASHER, 3/4 GR8	88
35	0400492	USS FLAT WASHER, 1/2	6
36	0400497	WASHER, 1/2 GR8	20
37	0400594	SCREW, 1/4-20X5/8 FHS	4
38	0400633	SCREW, 1/2-13X1-1/2 HHC GR8	8
39	0400642	SCREW, 3/4-10X5-1/2 HHC GR8	16

ITEM	PART NUMBER	DESCRIPTION	QTY
40	0400760	SCREW, 3/4-10X5 SHC	36
41	0400763	SCREW, 3/4-10X5-1/4 HHC GR8	36
42	07022884	PLATE - SLEW LOCK SPACER	1
43	0712380	D-RING	2
44	0725768	RETAINING RING PLATE	2
45	0726045	SPACER - RECOVERY BOOM	2
46	08010330	KNEEBOOM PIVOT	2
47	08014671	TANK MTG BRKT	4
48	08014690	REAR BODY MTG BRKT	2
49	08015252	L-ARM BRKT STOWAGE WLMT (LH)	1
50	08015253	L-ARM BRKT STOWAGE WLMT (RH)	1
51	08015474	600R SUBFRAME WLMT	1
52	09017071	SLEW LOCK ASSY	1
53	09017529	CNTRL VALVE, 8 SPOOL 600R KB	1
54	09017534	CNTRL VALVE, 8 SPOOL 600R KB	1
55	09017893	CONTROL ASSY - RH 600R KB	1
56	28058004	SWING LIMIT CAM WELDMENT	1
57	3012-801000	PIN WELD'- LIFT CYL UP.& LOWER	2
58	3012-980100	HYD. TANK ASSY - 3012	2
59	3116-710025	COVER - JACK LEG	2
60	3116-710026	PLATE, SPACER REAR JACK LEG	1
61	3116-710027	PANEL,BOTTOM SLEW COVER-SUBFRM	2
62	3116-710033	BLOCK, CYLINDER MTG	4
63	3116-912000	LH REAR OUTRIGGER ASSY	1
64	3116-913000	RH REAR OUTRIGGER ASSY	1
65	3116-916000	FRONT OUTRIGGER ASSY	2
66	806030005	LH BOOM GUIDE PAD - BODY ASSY	2
67	806030006	RH BOOM GUIDE PAD - BODY ASSY	2
68	810350002	PIN - UPPER TILT CYL.	2
69	897040002	TOP PAD INNER BOOM	2
70	9041108	5/16 NC X 1 3/4 HHCS PL GR8	10
71	9041212	3/8 NC X 2 3/4 HHCS PL GR8	8
72	9041402	1/2 NC X 1 1/4 HHCS PLT GR8	16
73	9041404	1/2 NC X 1 3/4 HHCS PL GR8	4
74	9043973	5/16-18X1 1/2 FL.HD.SOC.	24
75	9056125	1.25 NOM HVY DUTY RET RING EXT	4
76	BA0259	PIN - "D" RING	2
77	FC41	FITTING-90DEG BLKHD ELB W/ NUT	4

09017869, SUBFRAME ASSEMBLY - 600R KB (cont'd)

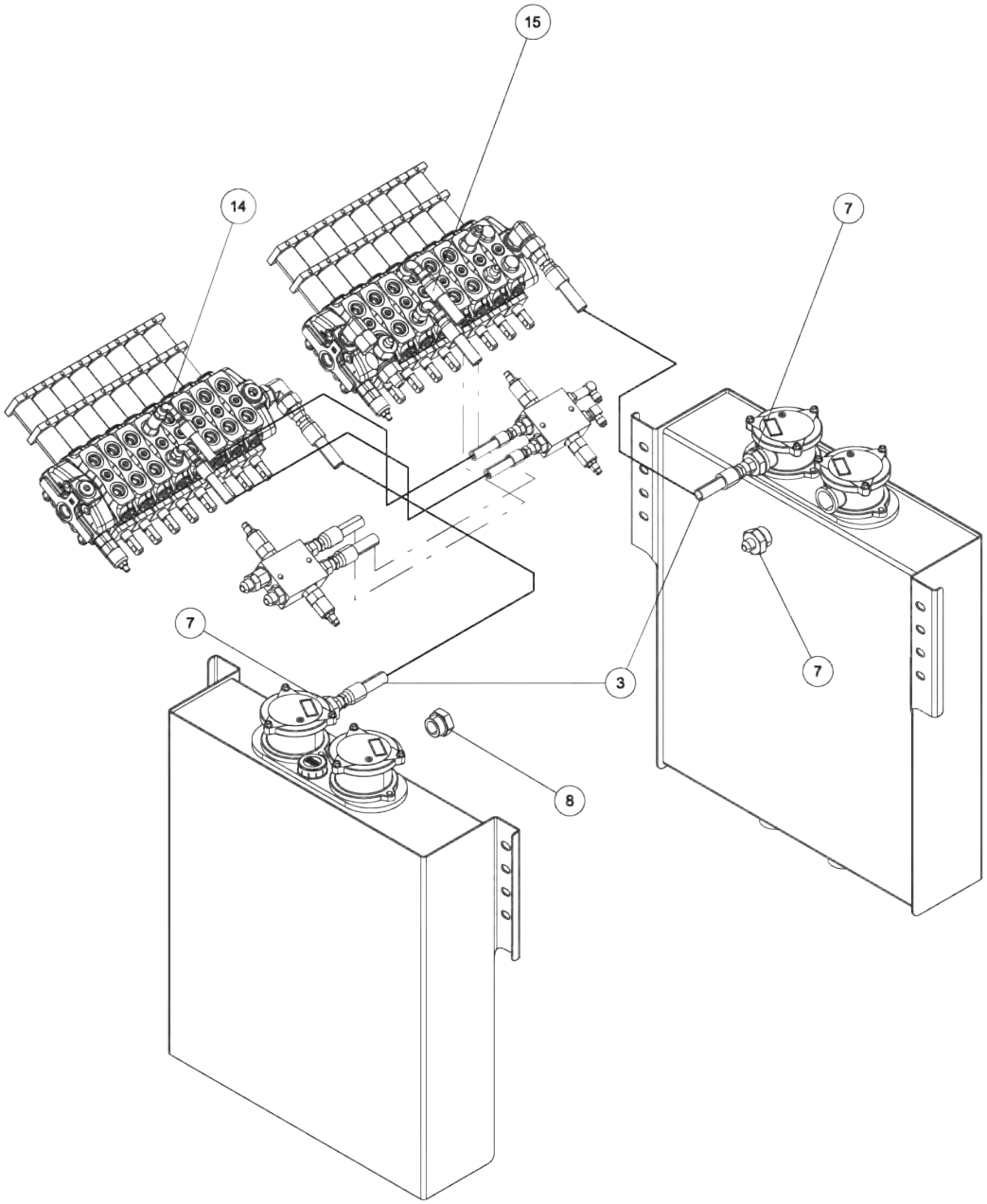

09017869, SUBFRAME ASSEMBLY - 600R KB (cont'd)

ITEM	PART NUMBER	DESCRIPTION	QTY
1	0300113	GREASE FITTING, 1/4-28 STR	2
2	0300188	CLAMP,1-1/2" HOSE	1
3	0300659	HOSE HYD, 45"	2
4	0301895	GREASE FITTING, 1/8 STR PTF	2
5	03021645	HOSE HYD 136 6FJX-6M3K-6FJX90S	4
6	0302575	FITTING-BULKHEAD RUN TEE	2
7	0302757	FITTING, CONN 8MJ - 16MB	3
8	0302850	PLUG 16MB	1
9	0303389	HOSE HYD, 46" LG	2
10	0307650	BEARING ASSY - 55XX	1
11	0307657	HYD HOSE FRT O/R BLKHD-CYL TUB	4
12	0307845	HOSE ASSY - 79"	2
13	0310243	HOSE, 68 6FJX-6M3K-6FJX90S	4
14	0310247	HOSE ASSY, 41"	2
15	0310780	HOSE 45" 8FJX-8M3K-8FJX90S	2
16	0312276	BEARING - BOOM PIVOT	2
17	0400060	SCREW, 1/4-20X1/2 HHC GR5	8
18	0400078	SCREW, 1/4-20X2 HHC GR5	2
19	0400121	SCREW, 3/8-16X3/4 HHC GR5	8
20	0400126	SCREW, 3/8-16X1 HHC GR5	12
21	0400141	SCREW, 3/8-16X7/8 HHC GR5	2
22	0400181	SCREW, 1/2-13X1-1/2 HHC GR5	2
23	0400211	SCREW, 1/2-13X1-3/4 HHC GR5	2
24	0400367	NUT, 1/4-20 LOK	2
25	0400382	NUT, 5/16-18 LOK	34
26	0400392	NUT, 3/8-16 LOK	12
27	0400408	NUT, 1/2-13 LOK	4
28	0400416	NUT, 1/2-13 LOK GR8	28
29	0400431	NUT, 3/4-10 LOK GR8	88
30	0400452	LKWASHER, 1/4	8
31	0400463	WASHER, 5/16	16
32	0400480	WASHER, 3/8	18
33	0400482	LKWASHER, 3/8	22
34	0400490	WASHER, 3/4 GR8	88
35	0400492	USS FLAT WASHER, 1/2	6
36	0400497	WASHER, 1/2 GR8	20
37	0400594	SCREW, 1/4-20X5/8 FHS	4
38	0400633	SCREW, 1/2-13X1-1/2 HHC GR8	8
39	0400642	SCREW, 3/4-10X5-1/2 HHC GR8	16

ITEM	PART NUMBER	DESCRIPTION	QTY
40	0400760	SCREW, 3/4-10X5 SHC	36
41	0400763	SCREW, 3/4-10X5-1/4 HHC GR8	36
42	07022884	PLATE - SLEW LOCK SPACER	1
43	0712380	D-RING	2
44	0725768	RETAINING RING PLATE	2
45	0726045	SPACER - RECOVERY BOOM	2
46	08010330	KNEEBOOM PIVOT	2
47	08014671	TANK MTG BRKT	4
48	08014690	REAR BODY MTG BRKT	2
49	08015252	L-ARM BRKT STOWAGE WLMT (LH)	1
50	08015253	L-ARM BRKT STOWAGE WLMT (RH)	1
51	08015474	600R SUBFRAME WLMT	1
52	09017071	SLEW LOCK ASSY	1
53	09017529	CNTRL VALVE, 8 SPOOL 600R KB	1
54	09017534	CNTRL VALVE, 8 SPOOL 600R KB	1
55	09017893	CONTROL ASSY - RH 600R KB	1
56	28058004	SWING LIMIT CAM WELDMENT	1
57	3012-801000	PIN WELD'- LIFT CYL UP.& LOWER	2
58	3012-980100	HYD. TANK ASSY - 3012	2
59	3116-710025	COVER - JACK LEG	2
60	3116-710026	PLATE, SPACER REAR JACK LEG	1
61	3116-710027	PANEL,BOTTOM SLEW COVER-SUBFRM	2
62	3116-710033	BLOCK, CYLINDER MTG	4
63	3116-912000	LH REAR OUTRIGGER ASSY	1
64	3116-913000	RH REAR OUTRIGGER ASSY	1
65	3116-916000	FRONT OUTRIGGER ASSY	2
66	806030005	LH BOOM GUIDE PAD - BODY ASSY	2
67	806030006	RH BOOM GUIDE PAD - BODY ASSY	2
68	810350002	PIN - UPPER TILT CYL.	2
69	897040002	TOP PAD INNER BOOM	2
70	9041108	5/16 NC X 1 3/4 HHCS PL GR8	10
71	9041212	3/8 NC X 2 3/4 HHCS PL GR8	8
72	9041402	1/2 NC X 1 1/4 HHCS PLT GR8	16
73	9041404	1/2 NC X 1 3/4 HHCS PL GR8	4
74	9043973	5/16-18X1 1/2 FL.HD.SOC.	24
75	9056125	1.25 NOM HVY DUTY RET RING EXT	4
76	BA0259	PIN - "D" RING	2
77	FC41	FITTING-90DEG BLKHD ELB W/ NUT	4

09017071, SLEW LOCK ASSEMBLY

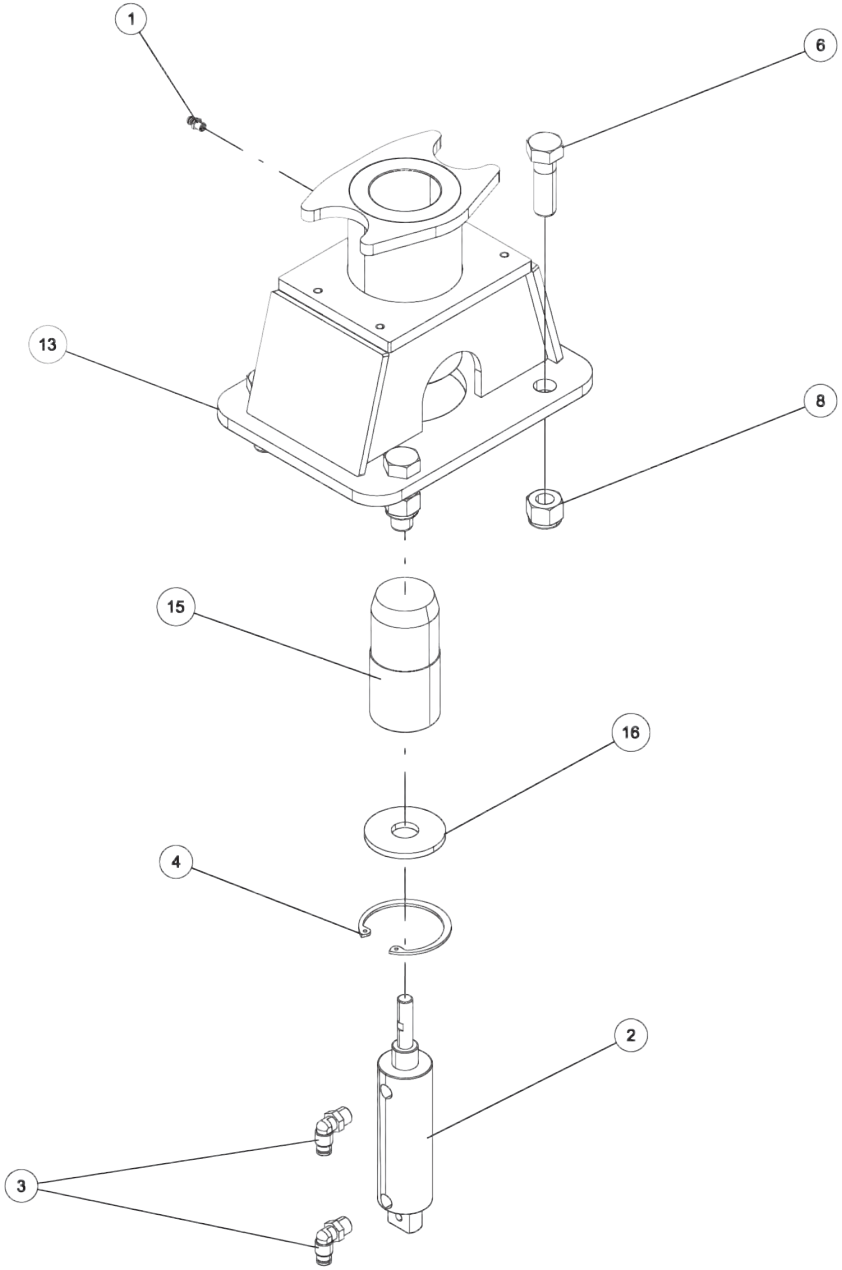

09017071, SLEW LOCK ASSEMBLY (cont'd)

ITEM	PART NUMBER	DESCRIPTION	QTY
1	0300113	GREASE FITTING, 1/4-28 STR	1
2	0306698	AIR CYLINDER-1.5BORE/1.71STROK	1
3	0307482	FITTING,1/4 TUBEX1/4NPT 90SWIV	2
4	0307654	RING, RETAINING 2 3/8 INT	1
5	0400066	SCREW, 1/4-20X3/4 HHC GR5	8
6	0400274	SCREW, 5/8-11X2 HHC GR8	4
7	0400367	NUT, 1/4-20 LOK	4
8	0400426	NUT, 5/8-11 LOK GR8	4
9	0400451	WASHER, 1/4	12
10	0400452	LKWASHER, 1/4	4
11	07026327	ANGLE, PROX SENS BRKT, UPPER	1
12	07029838	ANGLE, PROX SENSOR MOUNT 600R	1
13	08014670	HOUSE LOCK WLMT	1
14	26683038	SWITCH, PROXIMITY	1
15	3116-719101	PIN-SLEW LOCK ASSY	1
16	3116-719102	PLATE,WASHER SLEW LOCK ASSY	1

09017071, SLEW LOCK ASSEMBLY (cont'd)

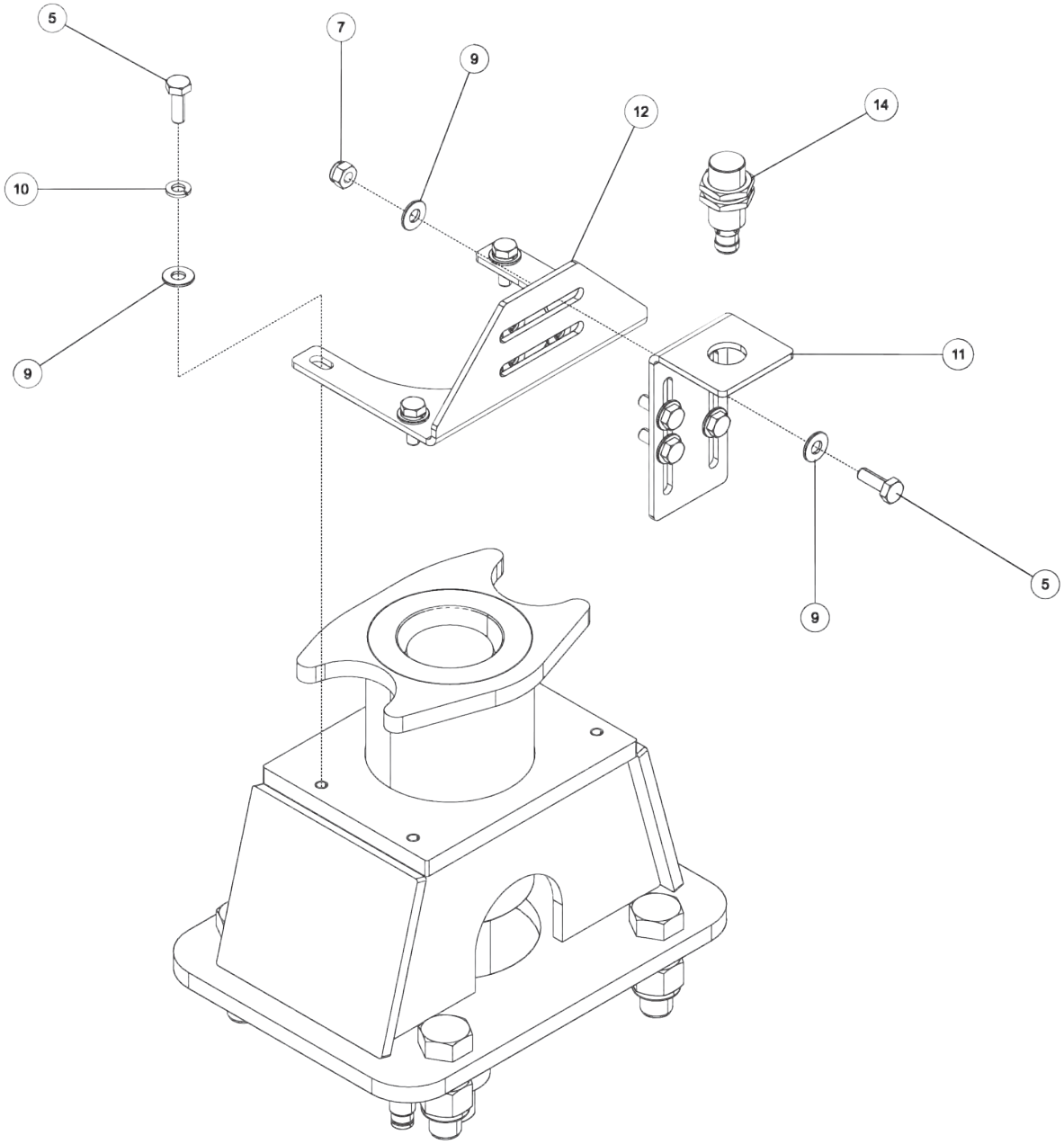

09017071, SLEW LOCK ASSEMBLY (cont'd)

ITEM	PART NUMBER	DESCRIPTION	QTY
1	0300113	GREASE FITTING, 1/4-28 STR	1
2	0306698	AIR CYLINDER-1.5BORE/1.71STROK	1
3	0307482	FITTING,1/4 TUBEX1/4NPT 90SWIV	2
4	0307654	RING, RETAINING 2 3/8 INT	1
5	0400066	SCREW, 1/4-20X3/4 HHC GR5	8
6	0400274	SCREW, 5/8-11X2 HHC GR8	4
7	0400367	NUT, 1/4-20 LOK	4
8	0400426	NUT, 5/8-11 LOK GR8	4
9	0400451	WASHER, 1/4	12
10	0400452	LKWASHER, 1/4	4
11	07026327	ANGLE, PROX SENS BRKT, UPPER	1
12	07029838	ANGLE, PROX SENSOR MOUNT 600R	1
13	08014670	HOUSE LOCK WLMT	1
14	26683038	SWITCH, PROXIMITY	1
15	3116-719101	PIN-SLEW LOCK ASSY	1
16	3116-719102	PLATE,WASHER SLEW LOCK ASSY	1

09017529, CONTROL VALVE ASSEMBLY - 8 SPOOL 600R KNEE BOOM

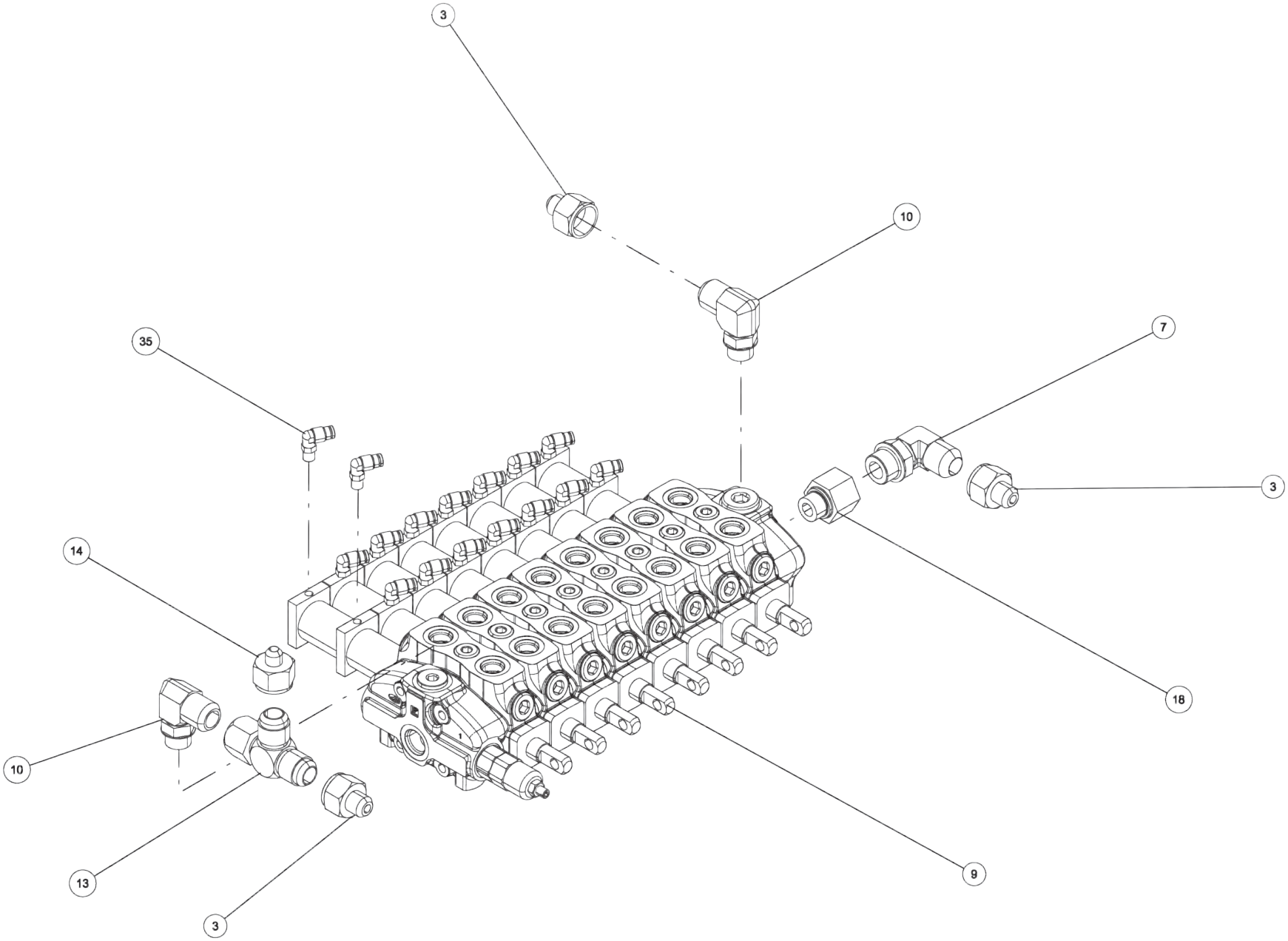

09017529, CONTROL VALVE ASSEMBLY - 8 SPOOL 600R KNEE BOOM (cont'd)

ITEM	PART NUMBER	DESCRIPTION	QTY
1	0300041	CONNECTOR, 8MJ-8MB	1
2	0300044	FITT, HYD CONN. 6MJ-8MB	5
3	0301372	FITTING, ST.CONN. 12FJ-8MJ	3
4	0301376	CONNECTOR 8 MJ - 10 MB	4
5	0301445	FITTING, EXTENDED	1
6	0301470	FITTING, 90ELB 6MJ-8MB90	2
7	0301545	FITTING, ELB 12MJ-12MB 90	1
8	0301620	FITTING, HYD. 6MJ - 6MB90	2
9	03019904	CONTROL VALVE - 8 SPOOL 600R	1
10	0302085	FITTING, 90 DEG ADPTR	2
11	03021621	CNTRL CABLE 131" LG, 1" STROKE	5
12	0302230	ADJ CLEVIS AC-210	5
13	0302826	FITTING, TEE	1
14	0302829	FITTING, ADAPTER	1
15	0303017	FITTING, CONNECTOR	2
16	0303176	ADAPTER, 10MB-8FP	1
17	0310289	FITTING-LONG ADAPTER 6MJ-8MBLL	5
18	0311712	FITTING ADAPTER STR	1
19	0400057	SCREW, 1/4-20X1-1/4 HHC	5
20	0400066	SCREW, 1/4-20X3/4 HHC GR5	12
21	0400078	SCREW, 1/4-20X2 HHC GR5	2
22	0400126	SCREW, 3/8-16X1 HHC GR5	8
23	0400365	NUT, 1/4-28 HEX	5
24	0400367	NUT, 1/4-20 LOK	19
25	0400392	NUT, 3/8-16 LOK	8
26	0400458	LKWASHER, 1/4 EXT	5
27	0400463	WASHER, 5/16	2
28	0400652	SCREW, M8-1.25X25 HHC 10.9	4
29	0400801	LKWASHER, M8	4
30	0410654	WASHER, M8	4
31	07023364	COVER - CONTROL VALVE 600R KB	1
32	07023365	SUPPORT - CONTROL VALVE COVER	2
33	08015131	VALVE PAN WLMT - 600R	1
34	24773023	VALVE - CROSS-OVER RELIEF	1
35	9010030	FITT, BRASS ELBOW 1/4T-1/8MPX	16

09017529, CONTROL VALVE ASSEMBLY - 8 SPOOL 600R KNEE BOOM (cont'd)

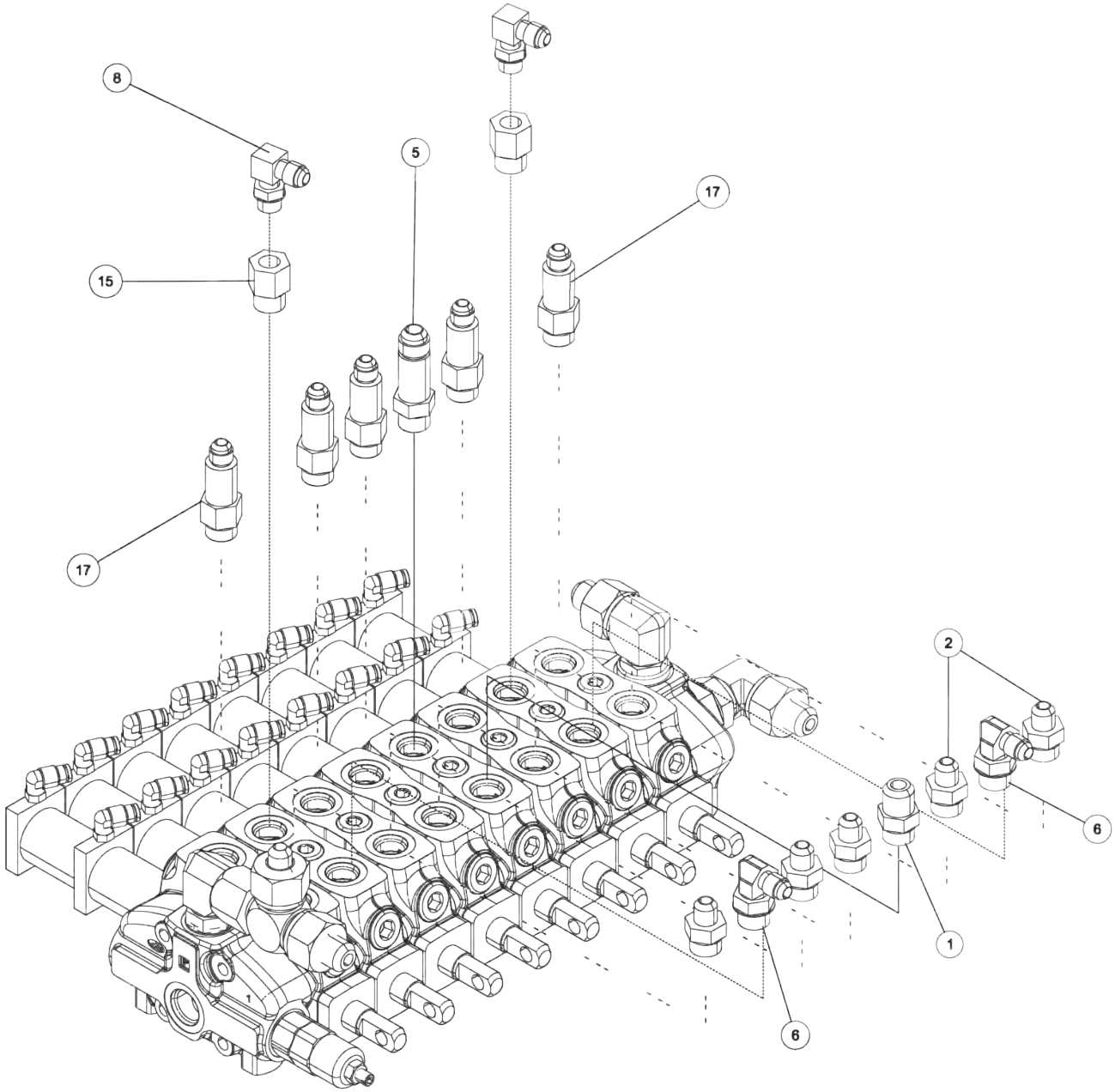

09017529, CONTROL VALVE ASSEMBLY - 8 SPOOL 600R KNEE BOOM (cont'd)

ITEM	PART NUMBER	DESCRIPTION	QTY
1	0300041	CONNECTOR, 8MJ-8MB	1
2	0300044	FITT, HYD CONN. 6MJ-8MB	5
3	0301372	FITTING, ST.CONN. 12FJ-8MJ	3
4	0301376	CONNECTOR 8 MJ - 10 MB	4
5	0301445	FITTING, EXTENDED	1
6	0301470	FITTING, 90ELB 6MJ-8MB90	2
7	0301545	FITTING, ELB 12MJ-12MB 90	1
8	0301620	FITTING, HYD. 6MJ - 6MB90	2
9	03019904	CONTROL VALVE - 8 SPOOL 600R	1
10	0302085	FITTING, 90 DEG ADPTR	2
11	03021621	CNTRL CABLE 131" LG, 1" STROKE	5
12	0302230	ADJ CLEVIS AC-210	5
13	0302826	FITTING, TEE	1
14	0302829	FITTING, ADAPTER	1
15	0303017	FITTING, CONNECTOR	2
16	0303176	ADAPTER, 10MB-8FP	1
17	0310289	FITTING-LONG ADAPTER 6MJ-8MBLL	5
18	0311712	FITTING ADAPTER STR	1
19	0400057	SCREW, 1/4-20X1-1/4 HHC	5
20	0400066	SCREW, 1/4-20X3/4 HHC GR5	12
21	0400078	SCREW, 1/4-20X2 HHC GR5	2
22	0400126	SCREW, 3/8-16X1 HHC GR5	8
23	0400365	NUT, 1/4-28 HEX	5
24	0400367	NUT, 1/4-20 LOK	19
25	0400392	NUT, 3/8-16 LOK	8
26	0400458	LKWASHER, 1/4 EXT	5
27	0400463	WASHER, 5/16	2
28	0400652	SCREW, M8-1.25X25 HHC 10.9	4
29	0400801	LKWASHER, M8	4
30	0410654	WASHER, M8	4
31	07023364	COVER - CONTROL VALVE 600R KB	1
32	07023365	SUPPORT - CONTROL VALVE COVER	2
33	08015131	VALVE PAN WLMT - 600R	1
34	24773023	VALVE - CROSS-OVER RELIEF	1
35	9010030	FITT, BRASS ELBOW 1/4T-1/8MPX	16

09017529, CONTROL VALVE ASSEMBLY - 8 SPOOL 600R KNEE BOOM (cont'd)

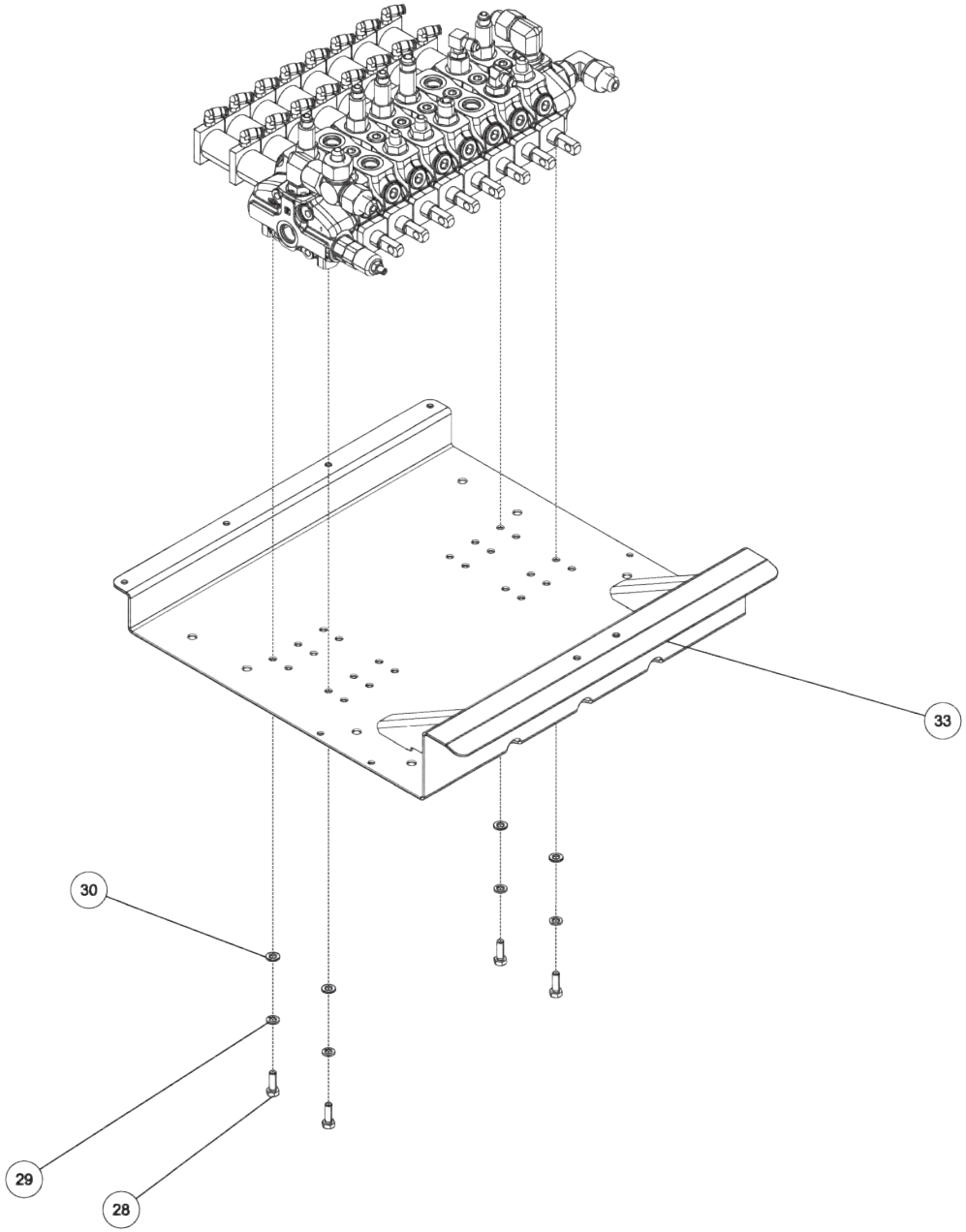

09017529, CONTROL VALVE ASSEMBLY - 8 SPOOL 600R KNEE BOOM (cont'd)

ITEM	PART NUMBER	DESCRIPTION	QTY
1	0300041	CONNECTOR, 8MJ-8MB	1
2	0300044	FITT, HYD CONN. 6MJ-8MB	5
3	0301372	FITTING, ST.CONN. 12FJ-8MJ	3
4	0301376	CONNECTOR 8 MJ - 10 MB	4
5	0301445	FITTING, EXTENDED	1
6	0301470	FITTING, 90ELB 6MJ-8MB90	2
7	0301545	FITTING, ELB 12MJ-12MB 90	1
8	0301620	FITTING, HYD. 6MJ - 6MB90	2
9	03019904	CONTROL VALVE - 8 SPOOL 600R	1
10	0302085	FITTING, 90 DEG ADPTR	2
11	03021621	CNTRL CABLE 131" LG, 1" STROKE	5
12	0302230	ADJ CLEVIS AC-210	5
13	0302826	FITTING, TEE	1
14	0302829	FITTING, ADAPTER	1
15	0303017	FITTING, CONNECTOR	2
16	0303176	ADAPTER, 10MB-8FP	1
17	0310289	FITTING-LONG ADAPTER 6MJ-8MBLL	5
18	0311712	FITTING ADAPTER STR	1
19	0400057	SCREW, 1/4-20X1-1/4 HHC	5
20	0400066	SCREW, 1/4-20X3/4 HHC GR5	12
21	0400078	SCREW, 1/4-20X2 HHC GR5	2
22	0400126	SCREW, 3/8-16X1 HHC GR5	8
23	0400365	NUT, 1/4-28 HEX	5
24	0400367	NUT, 1/4-20 LOK	19
25	0400392	NUT, 3/8-16 LOK	8
26	0400458	LKWASHER, 1/4 EXT	5
27	0400463	WASHER, 5/16	2
28	0400652	SCREW, M8-1.25X25 HHC 10.9	4
29	0400801	LKWASHER, M8	4
30	0410654	WASHER, M8	4
31	07023364	COVER - CONTROL VALVE 600R KB	1
32	07023365	SUPPORT - CONTROL VALVE COVER	2
33	08015131	VALVE PAN WLMT - 600R	1
34	24773023	VALVE - CROSS-OVER RELIEF	1
35	9010030	FITT, BRASS ELBOW 1/4T-1/8MPX	16

09017529, CONTROL VALVE ASSEMBLY - 8 SPOOL 600R KNEE BOOM (cont'd)

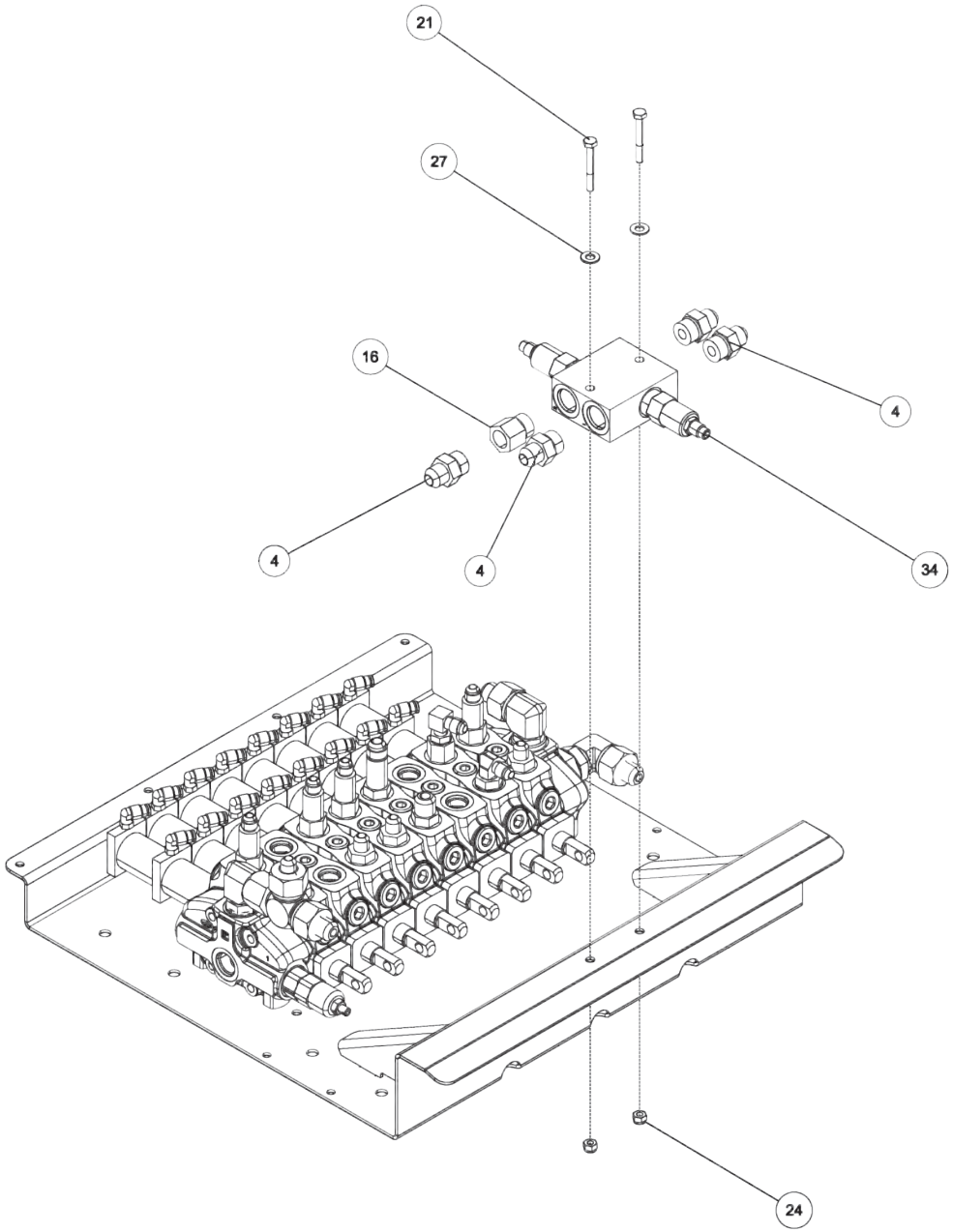

09017529, CONTROL VALVE ASSEMBLY - 8 SPOOL 600R KNEE BOOM (cont'd)

ITEM	PART NUMBER	DESCRIPTION	QTY
1	0300041	CONNECTOR, 8MJ-8MB	1
2	0300044	FITT, HYD CONN. 6MJ-8MB	5
3	0301372	FITTING, ST.CONN. 12FJ-8MJ	3
4	0301376	CONNECTOR 8 MJ - 10 MB	4
5	0301445	FITTING, EXTENDED	1
6	0301470	FITTING, 90ELB 6MJ-8MB90	2
7	0301545	FITTING, ELB 12MJ-12MB 90	1
8	0301620	FITTING, HYD. 6MJ - 6MB90	2
9	03019904	CONTROL VALVE - 8 SPOOL 600R	1
10	0302085	FITTING, 90 DEG ADPTR	2
11	03021621	CNTRL CABLE 131" LG, 1" STROKE	5
12	0302230	ADJ CLEVIS AC-210	5
13	0302826	FITTING, TEE	1
14	0302829	FITTING, ADAPTER	1
15	0303017	FITTING, CONNECTOR	2
16	0303176	ADAPTER, 10MB-8FP	1
17	0310289	FITTING-LONG ADAPTER 6MJ-8MBLL	5
18	0311712	FITTING ADAPTER STR	1
19	0400057	SCREW, 1/4-20X1-1/4 HHC	5
20	0400066	SCREW, 1/4-20X3/4 HHC GR5	12
21	0400078	SCREW, 1/4-20X2 HHC GR5	2
22	0400126	SCREW, 3/8-16X1 HHC GR5	8
23	0400365	NUT, 1/4-28 HEX	5
24	0400367	NUT, 1/4-20 LOK	19
25	0400392	NUT, 3/8-16 LOK	8
26	0400458	LKWASHER, 1/4 EXT	5
27	0400463	WASHER, 5/16	2
28	0400652	SCREW, M8-1.25X25 HHC 10.9	4
29	0400801	LKWASHER, M8	4
30	0410654	WASHER, M8	4
31	07023364	COVER - CONTROL VALVE 600R KB	1
32	07023365	SUPPORT - CONTROL VALVE COVER	2
33	08015131	VALVE PAN WLMT - 600R	1
34	24773023	VALVE - CROSS-OVER RELIEF	1
35	9010030	FITT, BRASS ELBOW 1/4T-1/8MPX	16

09017529, CONTROL VALVE ASSEMBLY - 8 SPOOL 600R KNEE BOOM (cont'd)

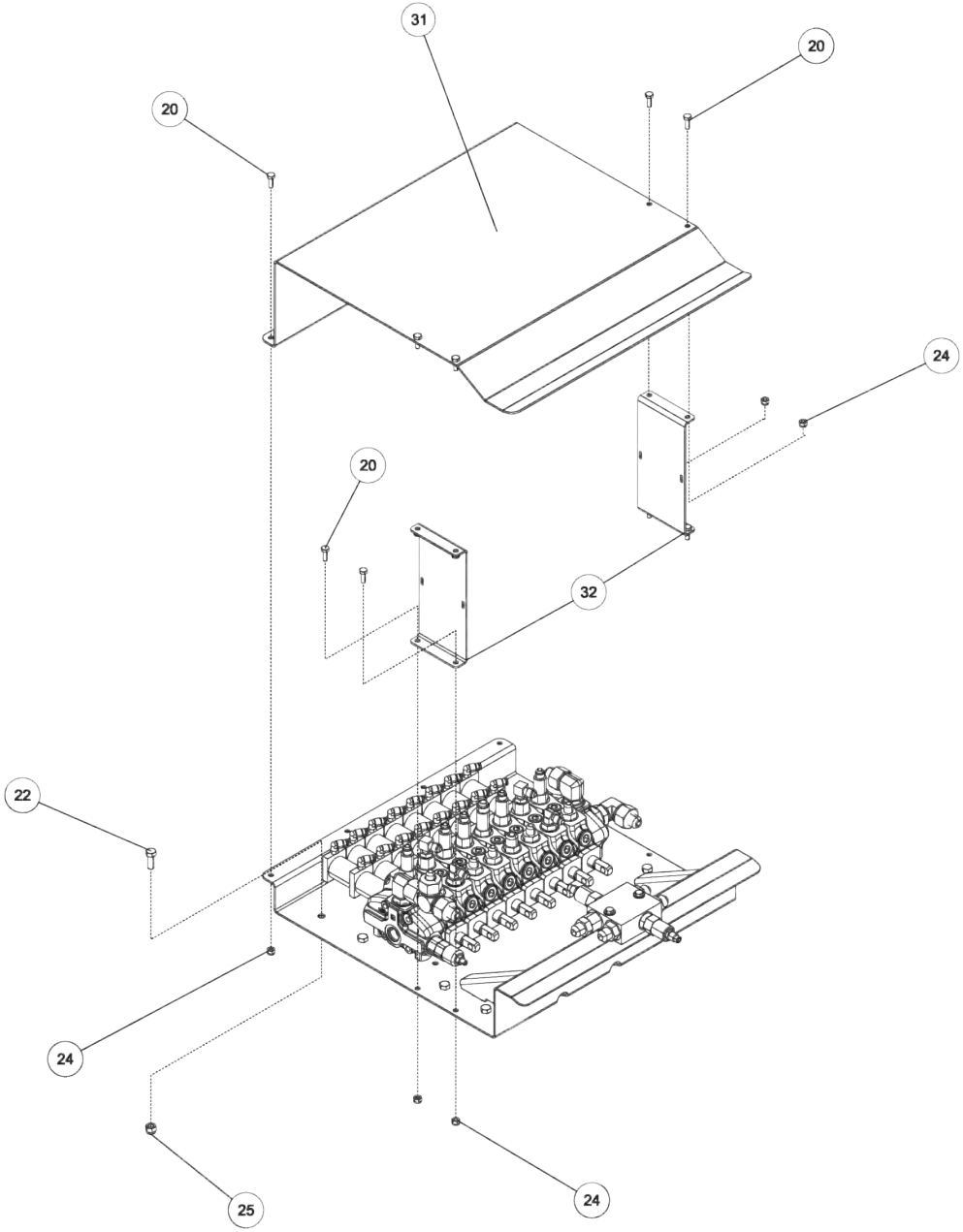

09017529, CONTROL VALVE ASSEMBLY - 8 SPOOL 600R KNEE BOOM (cont'd)

ITEM	PART NUMBER	DESCRIPTION	QTY
1	0300041	CONNECTOR, 8MJ-8MB	1
2	0300044	FITT, HYD CONN. 6MJ-8MB	5
3	0301372	FITTING, ST.CONN. 12FJ-8MJ	3
4	0301376	CONNECTOR 8 MJ - 10 MB	4
5	0301445	FITTING, EXTENDED	1
6	0301470	FITTING, 90ELB 6MJ-8MB90	2
7	0301545	FITTING, ELB 12MJ-12MB 90	1
8	0301620	FITTING, HYD. 6MJ - 6MB90	2
9	03019904	CONTROL VALVE - 8 SPOOL 600R	1
10	0302085	FITTING, 90 DEG ADPTR	2
11	03021621	CNTRL CABLE 131" LG, 1" STROKE	5
12	0302230	ADJ CLEVIS AC-210	5
13	0302826	FITTING, TEE	1
14	0302829	FITTING, ADAPTER	1
15	0303017	FITTING, CONNECTOR	2
16	0303176	ADAPTER, 10MB-8FP	1
17	0310289	FITTING-LONG ADAPTER 6MJ-8MBLL	5
18	0311712	FITTING ADAPTER STR	1
19	0400057	SCREW, 1/4-20X1-1/4 HHC	5
20	0400066	SCREW, 1/4-20X3/4 HHC GR5	12
21	0400078	SCREW, 1/4-20X2 HHC GR5	2
22	0400126	SCREW, 3/8-16X1 HHC GR5	8
23	0400365	NUT, 1/4-28 HEX	5
24	0400367	NUT, 1/4-20 LOK	19
25	0400392	NUT, 3/8-16 LOK	8
26	0400458	LKWASHER, 1/4 EXT	5
27	0400463	WASHER, 5/16	2
28	0400652	SCREW, M8-1.25X25 HHC 10.9	4
29	0400801	LKWASHER, M8	4
30	0410654	WASHER, M8	4
31	07023364	COVER - CONTROL VALVE 600R KB	1
32	07023365	SUPPORT - CONTROL VALVE COVER	2
33	08015131	VALVE PAN WLMT - 600R	1
34	24773023	VALVE - CROSS-OVER RELIEF	1
35	9010030	FITT, BRASS ELBOW 1/4T-1/8MPX	16

09017529, CONTROL VALVE ASSEMBLY - 8 SPOOL 600R KNEE BOOM (cont'd)

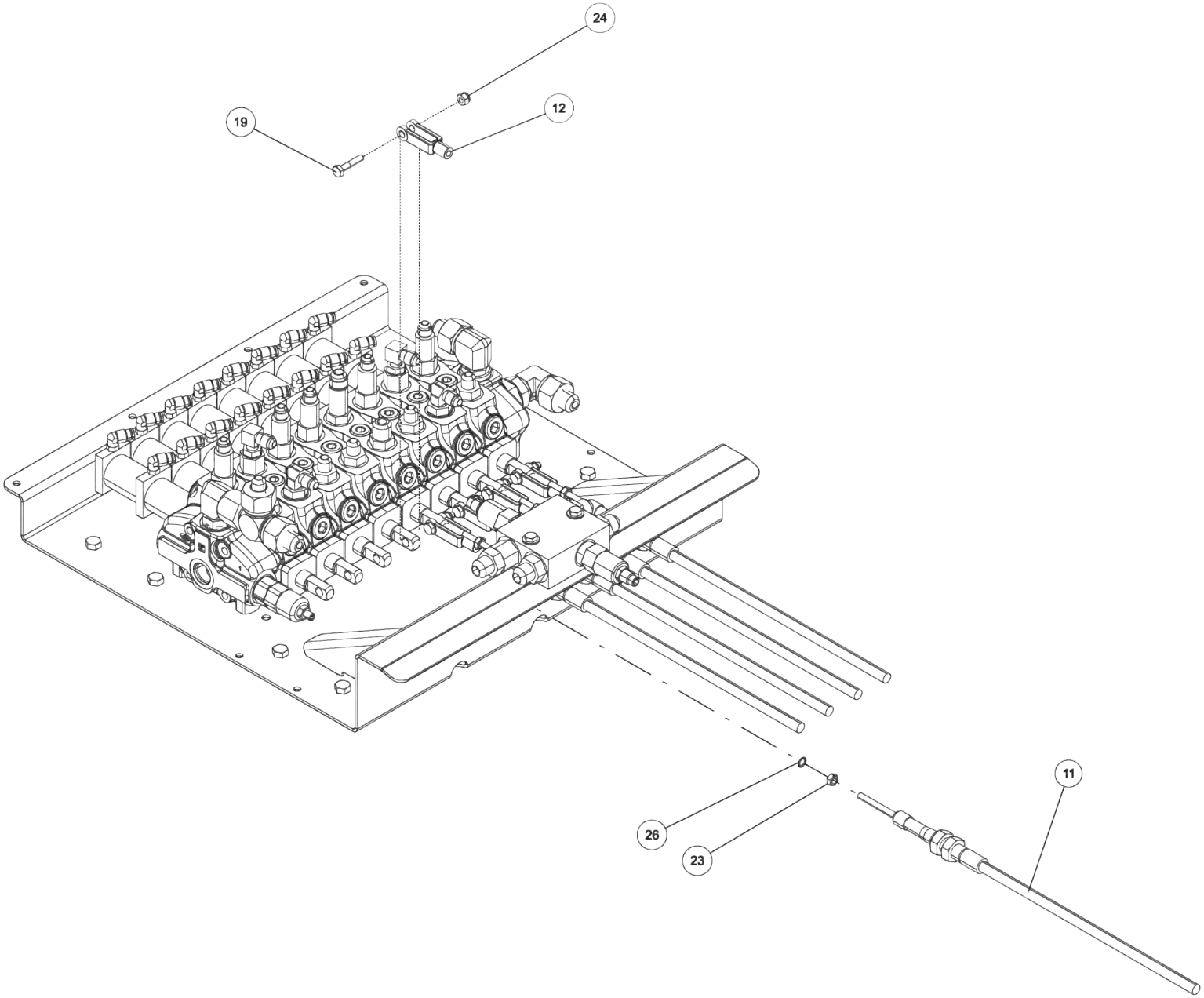

09017529, CONTROL VALVE ASSEMBLY - 8 SPOOL 600R KNEE BOOM (cont'd)

ITEM	PART NUMBER	DESCRIPTION	QTY
1	0300041	CONNECTOR, 8MJ-8MB	1
2	0300044	FITT, HYD CONN. 6MJ-8MB	5
3	0301372	FITTING, ST.CONN. 12FJ-8MJ	3
4	0301376	CONNECTOR 8 MJ - 10 MB	4
5	0301445	FITTING, EXTENDED	1
6	0301470	FITTING, 90ELB 6MJ-8MB90	2
7	0301545	FITTING, ELB 12MJ-12MB 90	1
8	0301620	FITTING, HYD. 6MJ - 6MB90	2
9	03019904	CONTROL VALVE - 8 SPOOL 600R	1
10	0302085	FITTING, 90 DEG ADPTR	2
11	03021621	CNTRL CABLE 131" LG, 1" STROKE	5
12	0302230	ADJ CLEVIS AC-210	5
13	0302826	FITTING, TEE	1
14	0302829	FITTING, ADAPTER	1
15	0303017	FITTING, CONNECTOR	2
16	0303176	ADAPTER, 10MB-8FP	1
17	0310289	FITTING-LONG ADAPTER 6MJ-8MBLL	5
18	0311712	FITTING ADAPTER STR	1
19	0400057	SCREW, 1/4-20X1-1/4 HHC	5
20	0400066	SCREW, 1/4-20X3/4 HHC GR5	12
21	0400078	SCREW, 1/4-20X2 HHC GR5	2
22	0400126	SCREW, 3/8-16X1 HHC GR5	8
23	0400365	NUT, 1/4-28 HEX	5
24	0400367	NUT, 1/4-20 LOK	19
25	0400392	NUT, 3/8-16 LOK	8
26	0400458	LKWASHER, 1/4 EXT	5
27	0400463	WASHER, 5/16	2
28	0400652	SCREW, M8-1.25X25 HHC 10.9	4
29	0400801	LKWASHER, M8	4
30	0410654	WASHER, M8	4
31	07023364	COVER - CONTROL VALVE 600R KB	1
32	07023365	SUPPORT - CONTROL VALVE COVER	2
33	08015131	VALVE PAN WLMT - 600R	1
34	24773023	VALVE - CROSS-OVER RELIEF	1
35	9010030	FITT, BRASS ELBOW 1/4T-1/8MPX	16

09017534, CONTROL VALVE ASSEMBLY - 8 SPOOL 600R KNEE BOOM

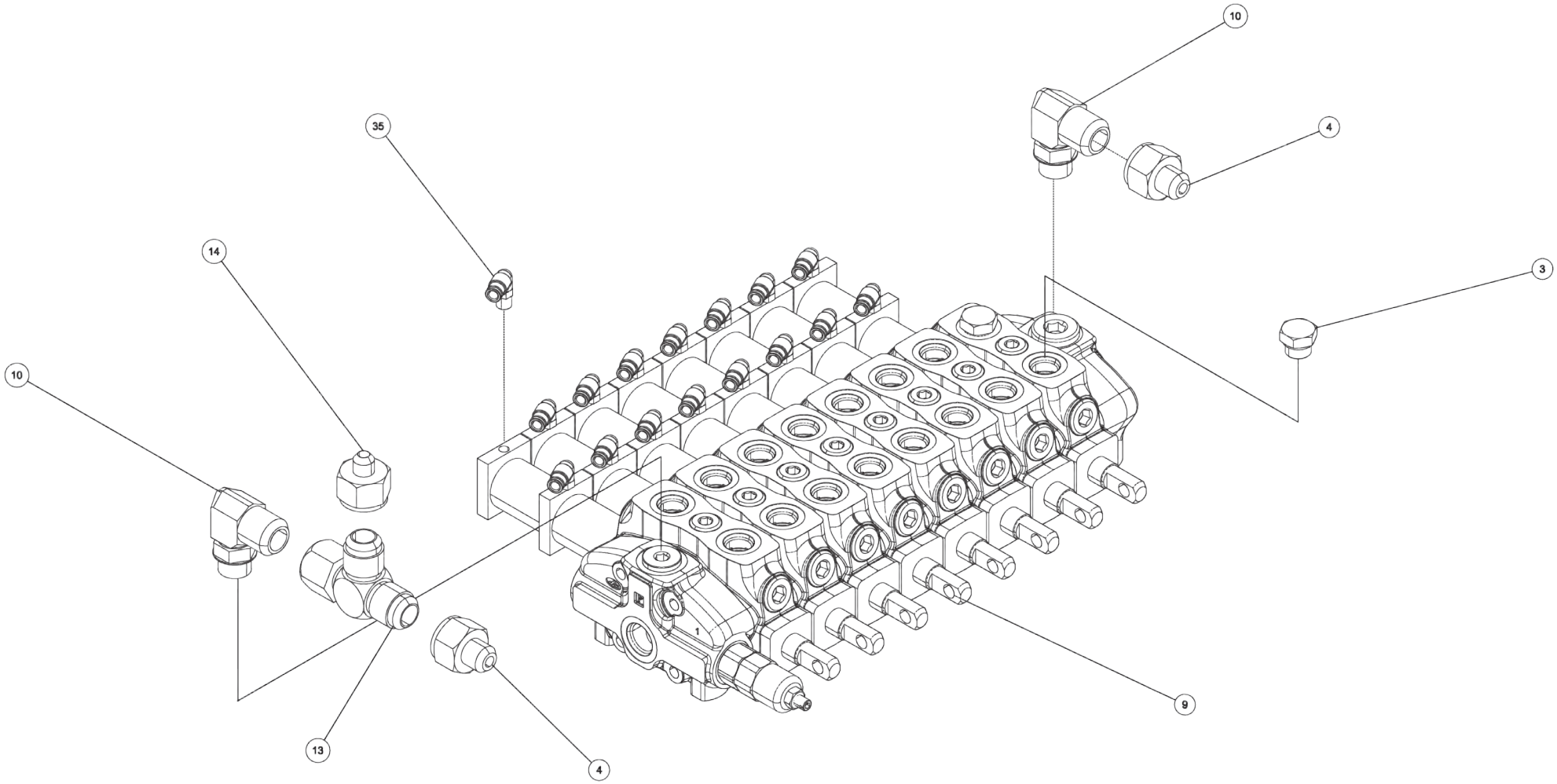

09017534, CONTROL VALVE ASSEMBLY - 8 SPOOL 600R KNEE BOOM (cont'd)

ITEM	PART NUMBER	DESCRIPTION	QTY
1	0300041	CONNECTOR, 8MJ-8MB	2
2	0300044	FITT, HYD CONN. 6MJ-8MB	3
3	0300387	PLUG, 8MB	2
4	0301372	FITTING, ST.CONN. 12FJ-8MJ	2
5	0301445	FITTING, EXTENDED	2
6	0301470	FITTING, 90ELB 6MJ-8MB90	2
7	0301620	FITTING, HYD. 6MJ - 6MB90	3
8	0301778	6MJ - 10MB STRAIGHT CONNECTOR	2
9	03019904	CONTROL VALVE - 8 SPOOL 600R	1
10	0302085	FITTING, 90 DEG ADPTR	2
11	03021621	CNTRL CABLE 131" LG, 1" STROKE	4
12	0302230	ADJ CLEVIS AC-210	4
13	0302826	FITTING, TEE	1
14	0302829	FITTING, ADAPTOR	1
15	0303017	FITTING, CONNECTOR	2
16	0303174	FITTING, CONNECTOR	2
17	0303761	FITTING, ELBOW 6MJ-6MB90L	1
18	0310289	FITTING-LONG ADAPTER 6MJ-8MBLL	3
19	0312902	VALVE, CROSS-OVER RELIEF(2175)	1
20	0400057	SCREW, 1/4-20X1-1/4 HHC	4
21	0400066	SCREW, 1/4-20X3/4 HHC GR5	12
22	0400078	SCREW, 1/4-20X2 HHC GR5	2
23	0400126	SCREW, 3/8-16X1 HHC GR5	8
24	0400365	NUT, 1/4-28 HEX	4
25	0400367	NUT, 1/4-20 LOK	18
26	0400392	NUT, 3/8-16 LOK	8
27	0400458	LKWASHER, 1/4 EXT	4
28	0400463	WASHER, 5/16	4
29	0400652	SCREW, M8-1.25X25 HHC 10.9	4
30	0400801	LKWASHER, M8	4
31	0410654	WASHER, M8	4
32	07023364	COVER - CONTROL VALVE 600R KB	1
33	07023365	SUPPORT - CONTROL VALVE COVER	2
34	08015131	VALVE PAN WLMT - 600R	1
35	9010030	FITT, BRASS ELBOW 1/4T-1/8MPX	16

09017534, CONTROL VALVE ASSEMBLY - 8 SPOOL 600R KNEE BOOM (cont'd)

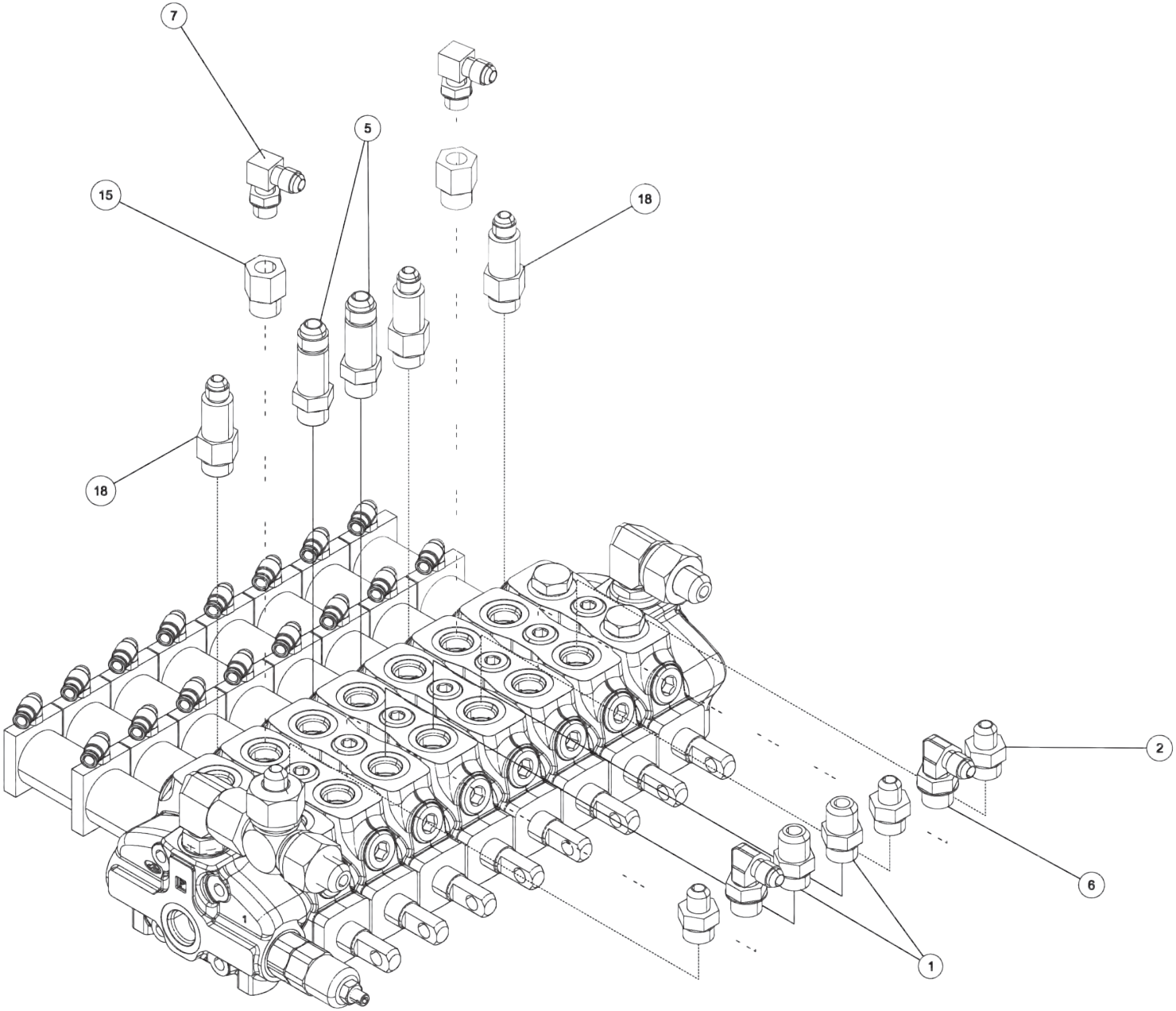

09017534, CONTROL VALVE ASSEMBLY - 8 SPOOL 600R KNEE BOOM (cont'd)

ITEM	PART NUMBER	DESCRIPTION	QTY
1	0300041	CONNECTOR, 8MJ-8MB	2
2	0300044	FITT, HYD CONN. 6MJ-8MB	3
3	0300387	PLUG, 8MB	2
4	0301372	FITTING, ST.CONN. 12FJ-8MJ	2
5	0301445	FITTING, EXTENDED	2
6	0301470	FITTING, 90ELB 6MJ-8MB90	2
7	0301620	FITTING, HYD. 6MJ - 6MB90	3
8	0301778	6MJ - 10MB STRAIGHT CONNECTOR	2
9	03019904	CONTROL VALVE - 8 SPOOL 600R	1
10	0302085	FITTING, 90 DEG ADPTR	2
11	03021621	CNTRL CABLE 131" LG, 1" STROKE	4
12	0302230	ADJ CLEVIS AC-210	4
13	0302826	FITTING, TEE	1
14	0302829	FITTING, ADAPTOR	1
15	0303017	FITTING, CONNECTOR	2
16	0303174	FITTING, CONNECTOR	2
17	0303761	FITTING, ELBOW 6MJ-6MB90L	1
18	0310289	FITTING-LONG ADAPTER 6MJ-8MBLL	3
19	0312902	VALVE, CROSS-OVER RELIEF(2175)	1
20	0400057	SCREW, 1/4-20X1-1/4 HHC	4
21	0400066	SCREW, 1/4-20X3/4 HHC GR5	12
22	0400078	SCREW, 1/4-20X2 HHC GR5	2
23	0400126	SCREW, 3/8-16X1 HHC GR5	8
24	0400365	NUT, 1/4-28 HEX	4
25	0400367	NUT, 1/4-20 LOK	18
26	0400392	NUT, 3/8-16 LOK	8
27	0400458	LKWASHER, 1/4 EXT	4
28	0400463	WASHER, 5/16	4
29	0400652	SCREW, M8-1.25X25 HHC 10.9	4
30	0400801	LKWASHER, M8	4
31	0410654	WASHER, M8	4
32	07023364	COVER - CONTROL VALVE 600R KB	1
33	07023365	SUPPORT - CONTROL VALVE COVER	2
34	08015131	VALVE PAN WLMT - 600R	1
35	9010030	FITT, BRASS ELBOW 1/4T-1/8MPX	16

09017534, CONTROL VALVE ASSEMBLY - 8 SPOOL 600R KNEE BOOM (cont'd)

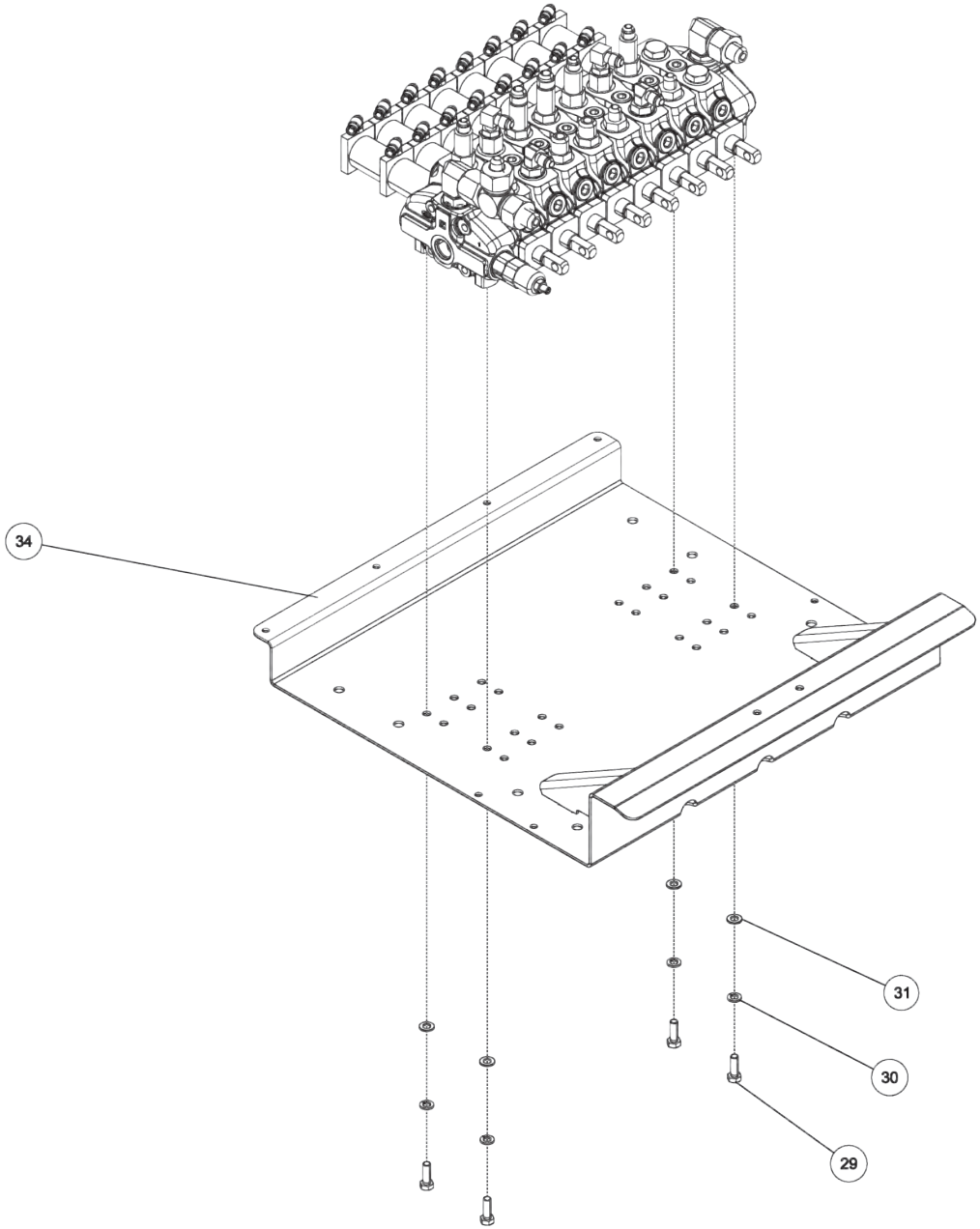

09017534, CONTROL VALVE ASSEMBLY - 8 SPOOL 600R KNEE BOOM (cont'd)

ITEM	PART NUMBER	DESCRIPTION	QTY
1	0300041	CONNECTOR, 8MJ-8MB	2
2	0300044	FITT, HYD CONN. 6MJ-8MB	3
3	0300387	PLUG, 8MB	2
4	0301372	FITTING, ST.CONN. 12FJ-8MJ	2
5	0301445	FITTING, EXTENDED	2
6	0301470	FITTING, 90ELB 6MJ-8MB90	2
7	0301620	FITTING, HYD. 6MJ - 6MB90	3
8	0301778	6MJ - 10MB STRAIGHT CONNECTOR	2
9	03019904	CONTROL VALVE - 8 SPOOL 600R	1
10	0302085	FITTING, 90 DEG ADPTR	2
11	03021621	CNTRL CABLE 131" LG, 1" STROKE	4
12	0302230	ADJ CLEVIS AC-210	4
13	0302826	FITTING, TEE	1
14	0302829	FITTING, ADAPTOR	1
15	0303017	FITTING, CONNECTOR	2
16	0303174	FITTING, CONNECTOR	2
17	0303761	FITTING, ELBOW 6MJ-6MB90L	1
18	0310289	FITTING-LONG ADAPTER 6MJ-8MBLL	3
19	0312902	VALVE, CROSS-OVER RELIEF(2175)	1
20	0400057	SCREW, 1/4-20X1-1/4 HHC	4
21	0400066	SCREW, 1/4-20X3/4 HHC GR5	12
22	0400078	SCREW, 1/4-20X2 HHC GR5	2
23	0400126	SCREW, 3/8-16X1 HHC GR5	8
24	0400365	NUT, 1/4-28 HEX	4
25	0400367	NUT, 1/4-20 LOK	18
26	0400392	NUT, 3/8-16 LOK	8
27	0400458	LKWASHER, 1/4 EXT	4
28	0400463	WASHER, 5/16	4
29	0400652	SCREW, M8-1.25X25 HHC 10.9	4
30	0400801	LKWASHER, M8	4
31	0410654	WASHER, M8	4
32	07023364	COVER - CONTROL VALVE 600R KB	1
33	07023365	SUPPORT - CONTROL VALVE COVER	2
34	08015131	VALVE PAN WLMT - 600R	1
35	9010030	FITT, BRASS ELBOW 1/4T-1/8MPX	16

09017534, CONTROL VALVE ASSEMBLY - 8 SPOOL 600R KNEE BOOM (cont'd)

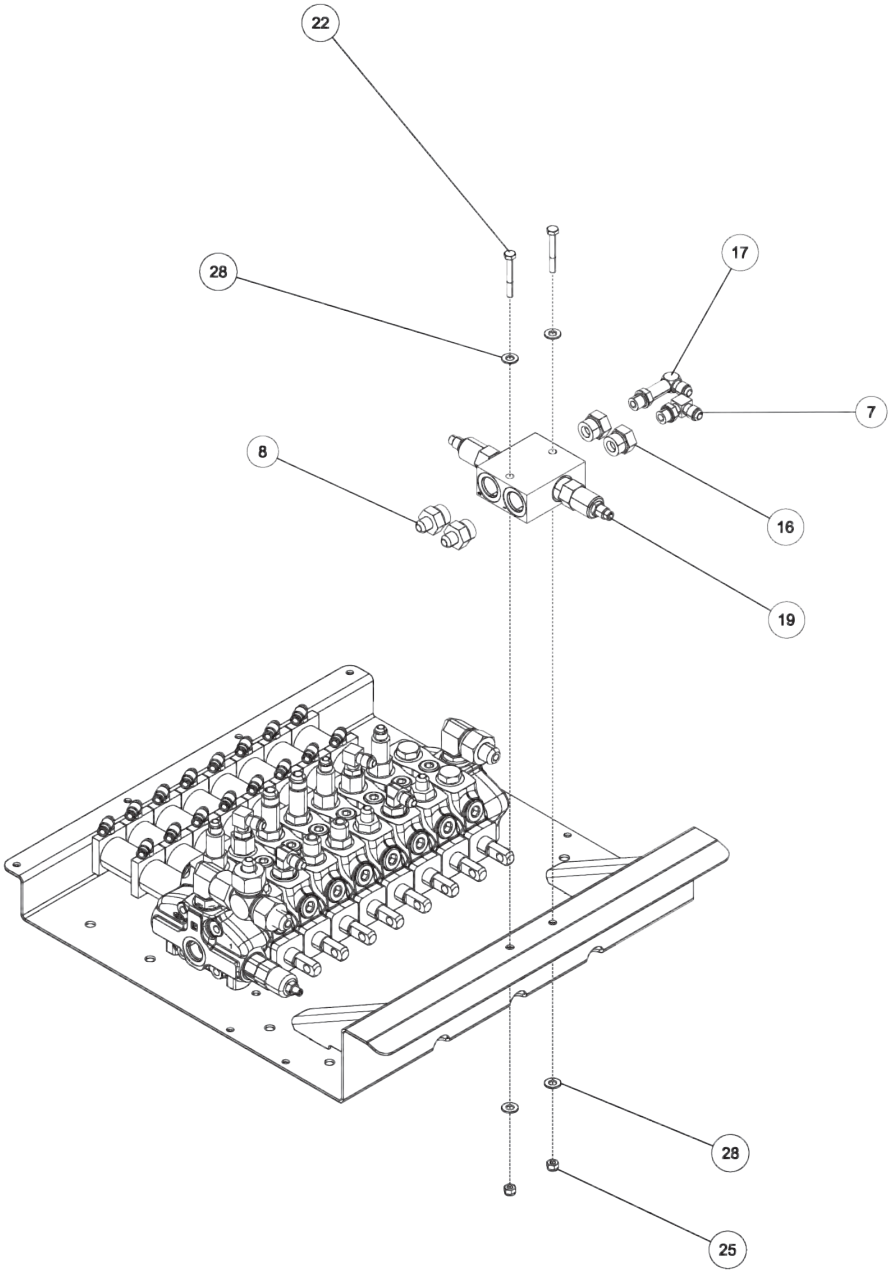

09017534, CONTROL VALVE ASSEMBLY - 8 SPOOL 600R KNEE BOOM (cont'd)

ITEM	PART NUMBER	DESCRIPTION	QTY
1	0300041	CONNECTOR, 8MJ-8MB	2
2	0300044	FITT, HYD CONN. 6MJ-8MB	3
3	0300387	PLUG, 8MB	2
4	0301372	FITTING, ST.CONN. 12FJ-8MJ	2
5	0301445	FITTING, EXTENDED	2
6	0301470	FITTING, 90ELB 6MJ-8MB90	2
7	0301620	FITTING, HYD. 6MJ - 6MB90	3
8	0301778	6MJ - 10MB STRAIGHT CONNECTOR	2
9	03019904	CONTROL VALVE - 8 SPOOL 600R	1
10	0302085	FITTING, 90 DEG ADPTR	2
11	03021621	CNTRL CABLE 131" LG, 1" STROKE	4
12	0302230	ADJ CLEVIS AC-210	4
13	0302826	FITTING, TEE	1
14	0302829	FITTING, ADAPTOR	1
15	0303017	FITTING, CONNECTOR	2
16	0303174	FITTING, CONNECTOR	2
17	0303761	FITTING, ELBOW 6MJ-6MB90L	1
18	0310289	FITTING-LONG ADAPTER 6MJ-8MBLL	3
19	0312902	VALVE, CROSS-OVER RELIEF(2175)	1
20	0400057	SCREW, 1/4-20X1-1/4 HHC	4
21	0400066	SCREW, 1/4-20X3/4 HHC GR5	12
22	0400078	SCREW, 1/4-20X2 HHC GR5	2
23	0400126	SCREW, 3/8-16X1 HHC GR5	8
24	0400365	NUT, 1/4-28 HEX	4
25	0400367	NUT, 1/4-20 LOK	18
26	0400392	NUT, 3/8-16 LOK	8
27	0400458	LKWASHER, 1/4 EXT	4
28	0400463	WASHER, 5/16	4
29	0400652	SCREW, M8-1.25X25 HHC 10.9	4
30	0400801	LKWASHER, M8	4
31	0410654	WASHER, M8	4
32	07023364	COVER - CONTROL VALVE 600R KB	1
33	07023365	SUPPORT - CONTROL VALVE COVER	2
34	08015131	VALVE PAN WLMT - 600R	1
35	9010030	FITT, BRASS ELBOW 1/4T-1/8MPX	16

09017534, CONTROL VALVE ASSEMBLY - 8 SPOOL 600R KNEE BOOM (cont'd)

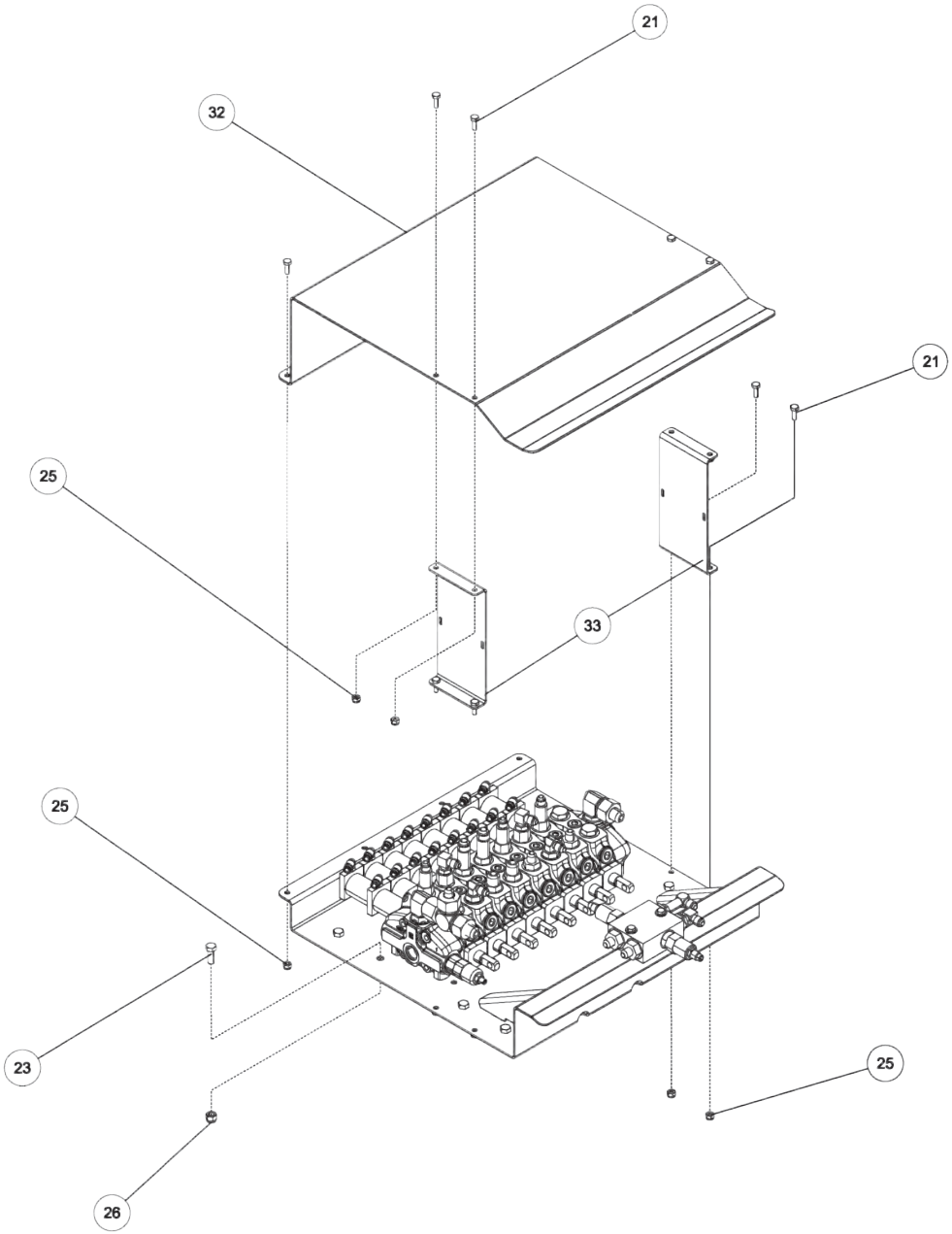

09017534, CONTROL VALVE ASSEMBLY - 8 SPOOL 600R KNEE BOOM (cont'd)

ITEM	PART NUMBER	DESCRIPTION	QTY
1	0300041	CONNECTOR, 8MJ-8MB	2
2	0300044	FITT, HYD CONN. 6MJ-8MB	3
3	0300387	PLUG, 8MB	2
4	0301372	FITTING, ST.CONN. 12FJ-8MJ	2
5	0301445	FITTING, EXTENDED	2
6	0301470	FITTING, 90ELB 6MJ-8MB90	2
7	0301620	FITTING, HYD. 6MJ - 6MB90	3
8	0301778	6MJ - 10MB STRAIGHT CONNECTOR	2
9	03019904	CONTROL VALVE - 8 SPOOL 600R	1
10	0302085	FITTING, 90 DEG ADPTR	2
11	03021621	CNTRL CABLE 131" LG, 1" STROKE	4
12	0302230	ADJ CLEVIS AC-210	4
13	0302826	FITTING, TEE	1
14	0302829	FITTING, ADAPTOR	1
15	0303017	FITTING, CONNECTOR	2
16	0303174	FITTING, CONNECTOR	2
17	0303761	FITTING, ELBOW 6MJ-6MB90L	1
18	0310289	FITTING-LONG ADAPTER 6MJ-8MBLL	3
19	0312902	VALVE, CROSS-OVER RELIEF(2175)	1
20	0400057	SCREW, 1/4-20X1-1/4 HHC	4
21	0400066	SCREW, 1/4-20X3/4 HHC GR5	12
22	0400078	SCREW, 1/4-20X2 HHC GR5	2
23	0400126	SCREW, 3/8-16X1 HHC GR5	8
24	0400365	NUT, 1/4-28 HEX	4
25	0400367	NUT, 1/4-20 LOK	18
26	0400392	NUT, 3/8-16 LOK	8
27	0400458	LKWASHER, 1/4 EXT	4
28	0400463	WASHER, 5/16	4
29	0400652	SCREW, M8-1.25X25 HHC 10.9	4
30	0400801	LKWASHER, M8	4
31	0410654	WASHER, M8	4
32	07023364	COVER - CONTROL VALVE 600R KB	1
33	07023365	SUPPORT - CONTROL VALVE COVER	2
34	08015131	VALVE PAN WLMT - 600R	1
35	9010030	FITT, BRASS ELBOW 1/4T-1/8MPX	16

09017534, CONTROL VALVE ASSEMBLY - 8 SPOOL 600R KNEE BOOM (cont'd)

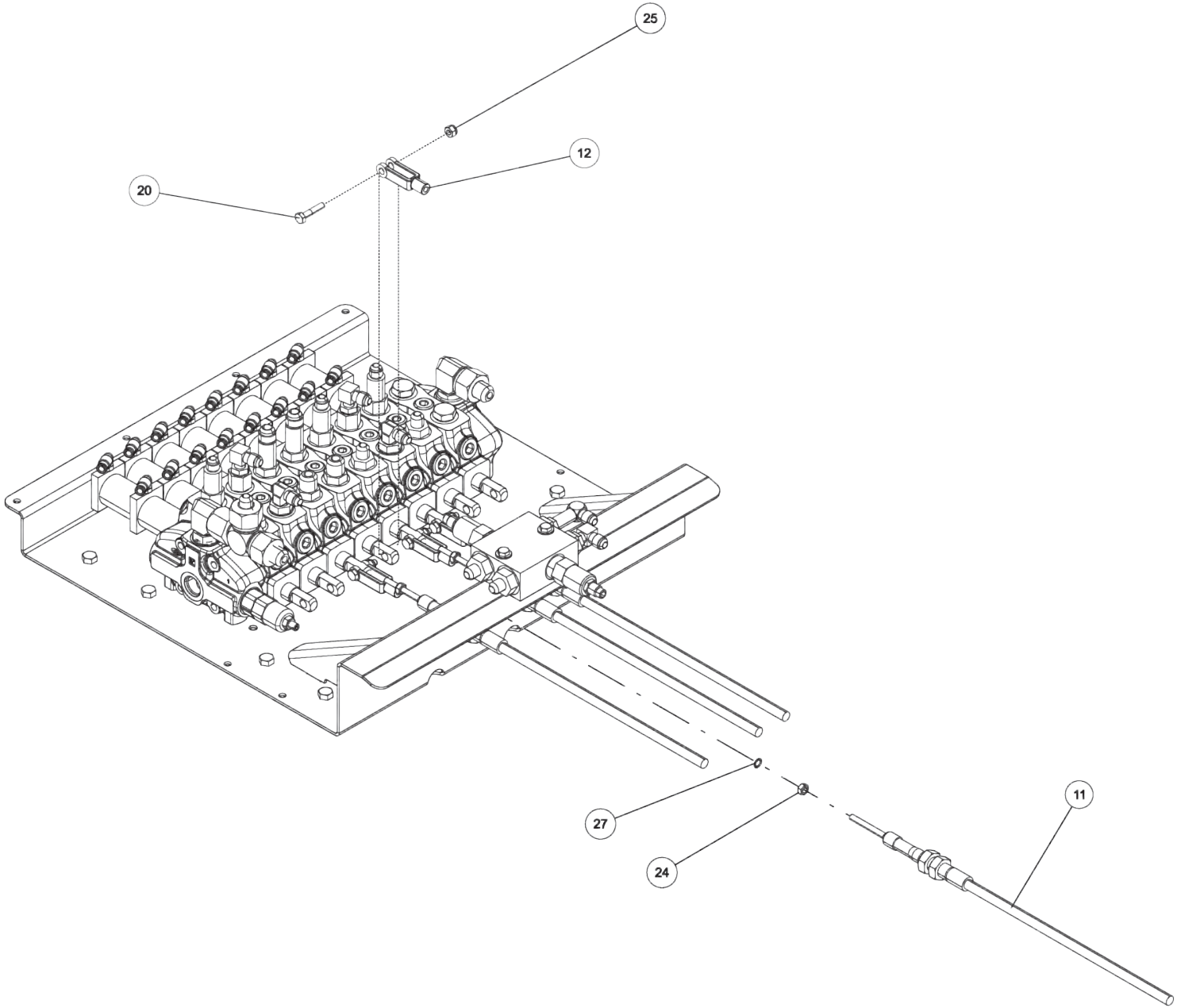

09017534, CONTROL VALVE ASSEMBLY - 8 SPOOL 600R KNEE BOOM (cont'd)

ITEM	PART NUMBER	DESCRIPTION	QTY
1	0300041	CONNECTOR, 8MJ-8MB	2
2	0300044	FITT, HYD CONN. 6MJ-8MB	3
3	0300387	PLUG, 8MB	2
4	0301372	FITTING, ST.CONN. 12FJ-8MJ	2
5	0301445	FITTING, EXTENDED	2
6	0301470	FITTING, 90ELB 6MJ-8MB90	2
7	0301620	FITTING, HYD. 6MJ - 6MB90	3
8	0301778	6MJ - 10MB STRAIGHT CONNECTOR	2
9	03019904	CONTROL VALVE - 8 SPOOL 600R	1
10	0302085	FITTING, 90 DEG ADPTR	2
11	03021621	CNTRL CABLE 131" LG, 1" STROKE	4
12	0302230	ADJ CLEVIS AC-210	4
13	0302826	FITTING, TEE	1
14	0302829	FITTING, ADAPTOR	1
15	0303017	FITTING, CONNECTOR	2
16	0303174	FITTING, CONNECTOR	2
17	0303761	FITTING, ELBOW 6MJ-6MB90L	1
18	0310289	FITTING-LONG ADAPTER 6MJ-8MBLL	3
19	0312902	VALVE, CROSS-OVER RELIEF(2175)	1
20	0400057	SCREW, 1/4-20X1-1/4 HHC	4
21	0400066	SCREW, 1/4-20X3/4 HHC GR5	12
22	0400078	SCREW, 1/4-20X2 HHC GR5	2
23	0400126	SCREW, 3/8-16X1 HHC GR5	8
24	0400365	NUT, 1/4-28 HEX	4
25	0400367	NUT, 1/4-20 LOK	18
26	0400392	NUT, 3/8-16 LOK	8
27	0400458	LKWASHER, 1/4 EXT	4
28	0400463	WASHER, 5/16	4
29	0400652	SCREW, M8-1.25X25 HHC 10.9	4
30	0400801	LKWASHER, M8	4
31	0410654	WASHER, M8	4
32	07023364	COVER - CONTROL VALVE 600R KB	1
33	07023365	SUPPORT - CONTROL VALVE COVER	2
34	08015131	VALVE PAN WLMT - 600R	1
35	9010030	FITT, BRASS ELBOW 1/4T-1/8MPX	16

09017893, CONTROL ASSEMBLY - RH 600R KNEE BOOM

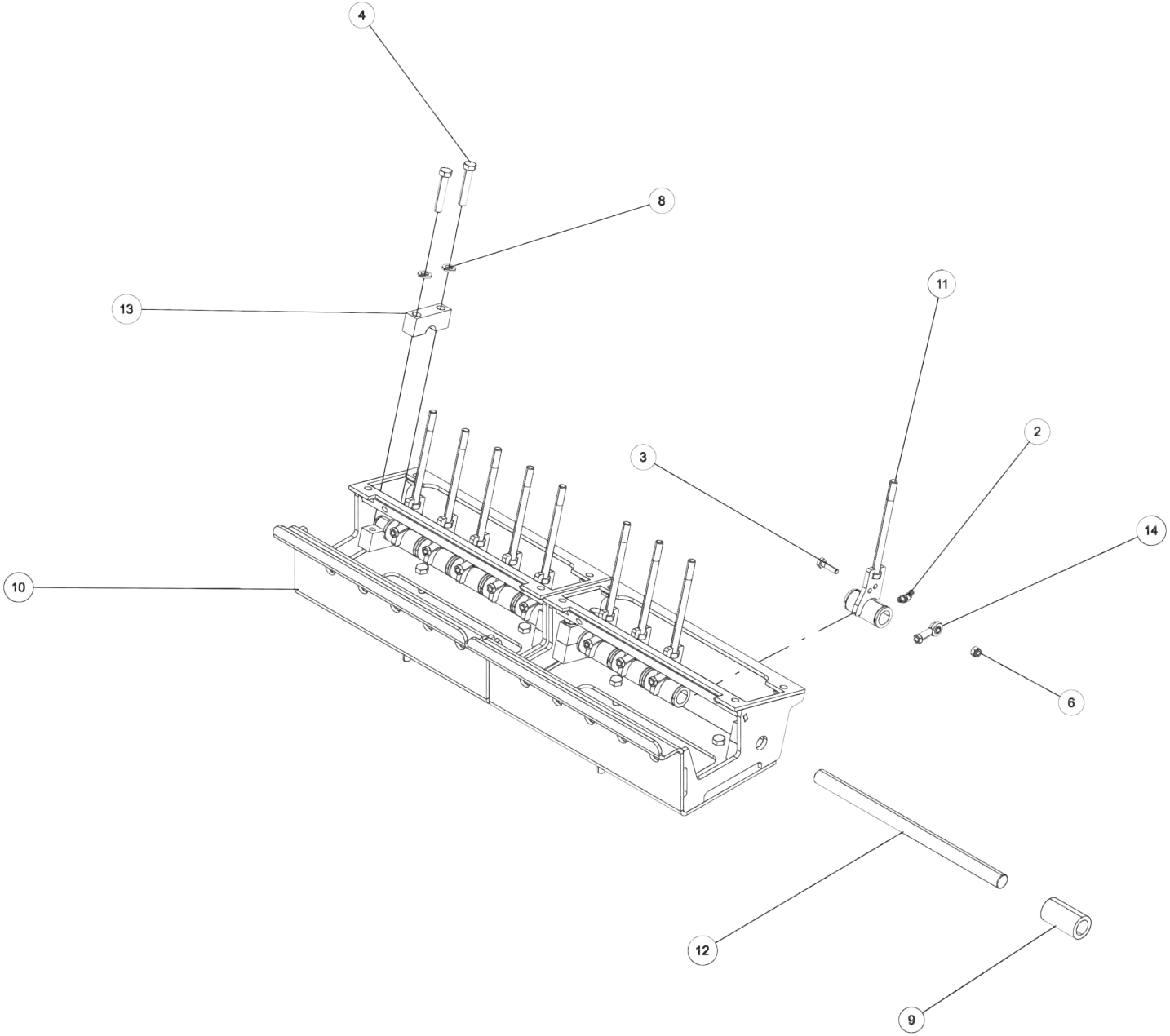

09017893, CONTROL ASSEMBLY - RH 600R KNEE BOOM (cont'd)

ITEM	PART NUMBER	DESCRIPTION	QTY
1	03021621	CNTRL CABLE 131" LG, 1" STROKE	9
2	0302726	GREASE FITTING, 1/4-28 45	9
3	0400070	SCREW, 1/4-20X1 HHC GR5	9
4	0400173	SCREW, 3/8-16X2 HHC GR8	8
5	0400366	NUT, 1/4-20 HEX	9
6	0400367	NUT, 1/4-20 LOK	9
7	0400458	LKWASHER, 1/4 EXT	9
8	0400482	LKWASHER, 3/8	8
9	0718535	SPACER	1
10	0807538	REAR CONTROL BRACKET WLMT	2
11	0908406	CONTROL HANDLE ASSY	9
12	3014-700003	PIN - CONTROLS - 12.75" LGTH	2
13	3014-798701	BLOCK - RETAINING	4
14	HD0900	BEARING, ROD END, 1/4-28	9

09017893, CONTROL ASSEMBLY - RH 600R KNEE BOOM (cont'd)

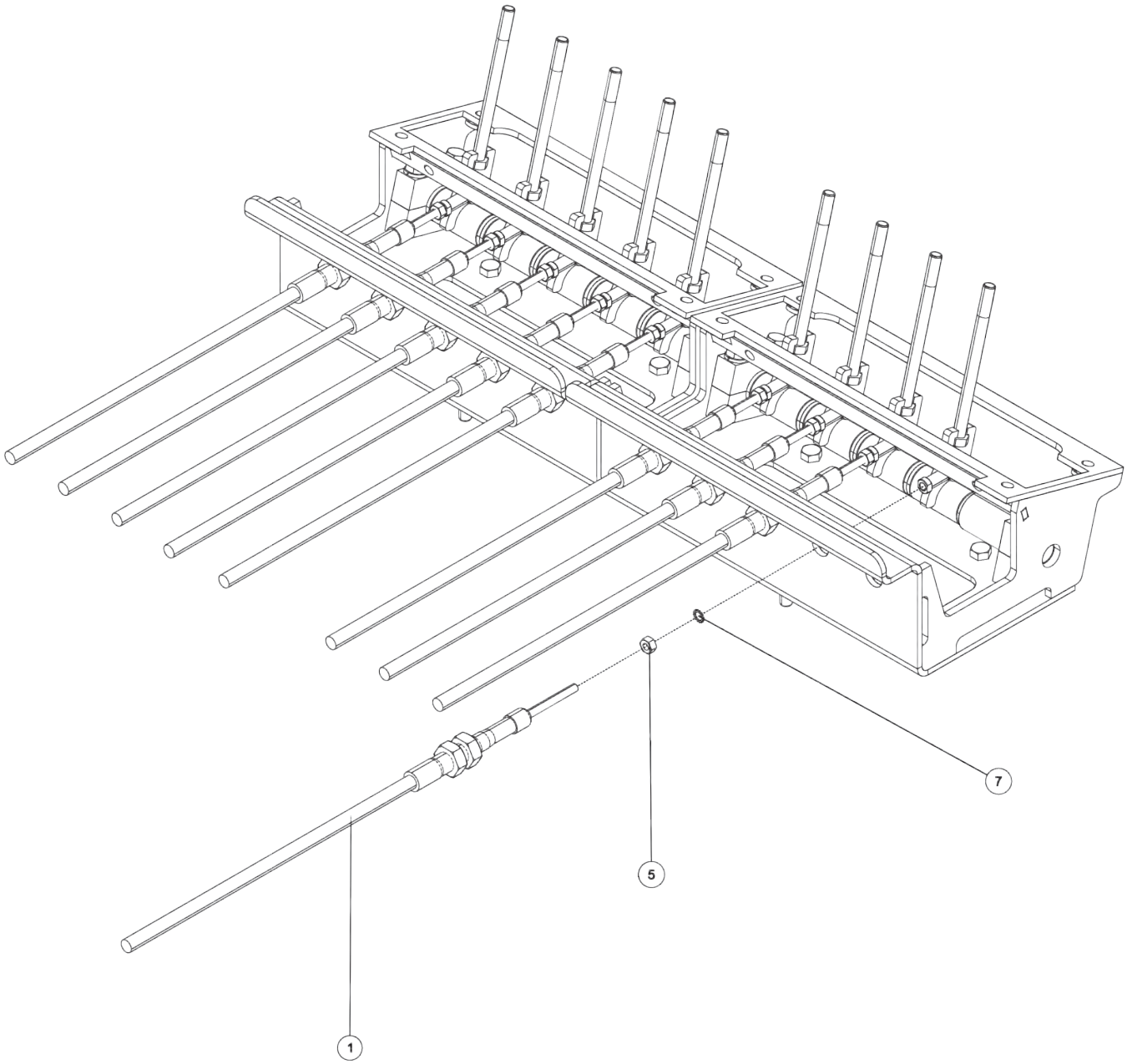

09017893, CONTROL ASSEMBLY - RH 600R KNEE BOOM (cont'd)

ITEM	PART NUMBER	DESCRIPTION	QTY
1	03021621	CNTRL CABLE 131" LG, 1" STROKE	9
2	0302726	GREASE FITTING, 1/4-28 45	9
3	0400070	SCREW, 1/4-20X1 HHC GR5	9
4	0400173	SCREW, 3/8-16X2 HHC GR8	8
5	0400366	NUT, 1/4-20 HEX	9
6	0400367	NUT, 1/4-20 LOK	9
7	0400458	LKWASHER, 1/4 EXT	9
8	0400482	LKWASHER, 3/8	8
9	0718535	SPACER	1
10	0807538	REAR CONTROL BRACKET WLMT	2
11	0908406	CONTROL HANDLE ASSY	9
12	3014-700003	PIN - CONTROLS - 12.75" LGTH	2
13	3014-798701	BLOCK - RETAINING	4
14	HD0900	BEARING, ROD END, 1/4-28	9

3012-980100, HYDRAULIC TANK ASSY

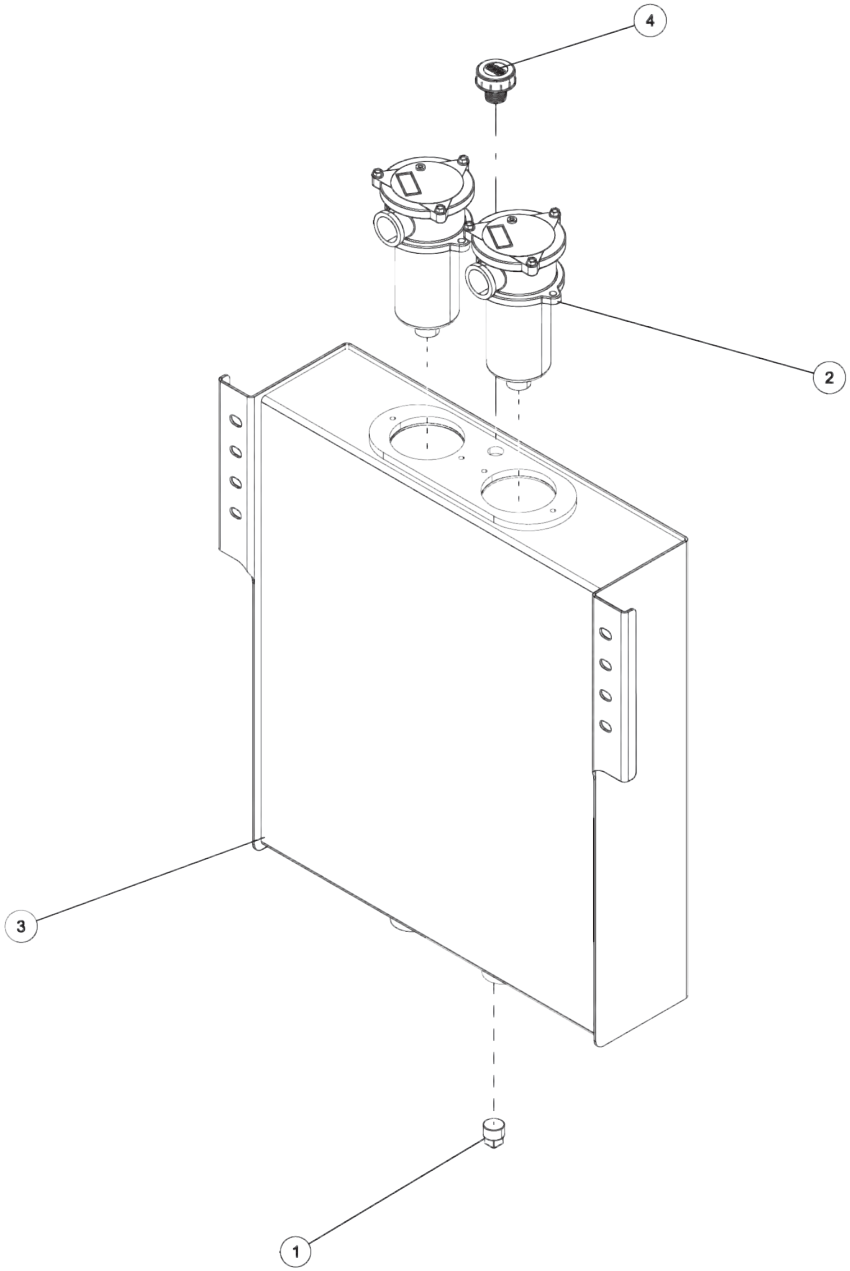

3012-980100, HYDRAULIC TANK ASSY (cont'd)

ITEM	PART NUMBER	DESCRIPTION	QTY
1	0303155	PIPE PLUG 3/4 NPT MAGNETIC	1
2	0310296	FILTER HEAD ASSY W/ELEMENT	2
3	3012-880100	HYDRAULIC TANK WELD'T	1
4	9018131	BREATHER CAP (LUCAS) 3/4	1

3116-912000, LH REAR OUTRIGGER ASSEMBLY

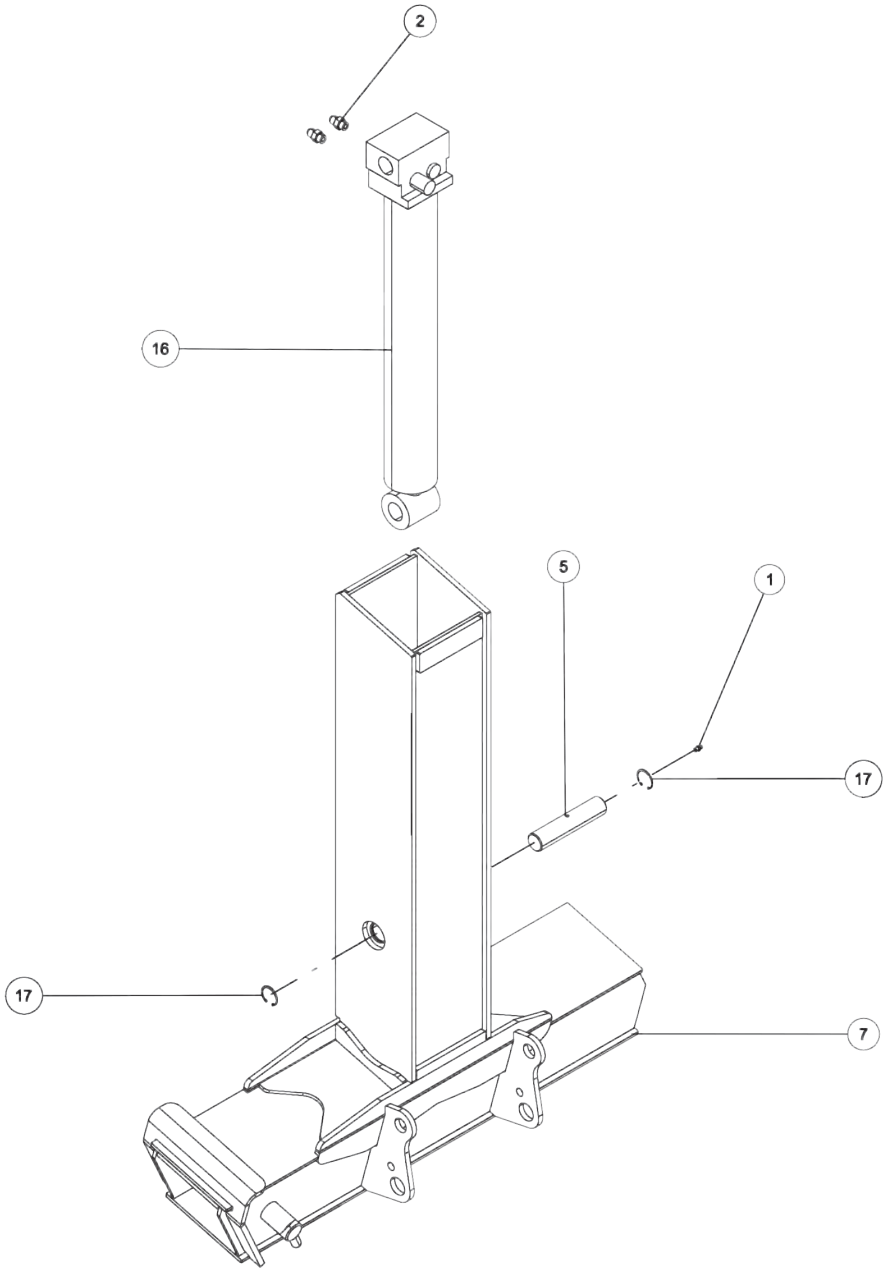

3116-912000, LH REAR OUTRIGGER ASSEMBLY (cont'd)

ITEM	PART NUMBER	DESCRIPTION	QTY
1	0300113	GREASE FITTING, 1/4-28 STR	1
2	0301522	ADAPTER, 6MJ-6MB	2
3	0400059	SCREW, 1/4-20X5/8 HHC GR5	6
4	0400452	LKWASHER, 1/4	6
5	3116-700006	PIN, LOWER JACK LEG CYLINDER	1
6	3116-712020	PANEL, COVER REAR OUTRIGGER	1
7	3116-812000	LH REAR OUTRIGGER WELD'T	1
8	3116-812500	REAR OUTRIGGER SPADE WELD'T	1
9	3116-814000	REAR INNER OUTRIGGER WELD'T	1
10	3116-814500	REAR OUTRIGGER PAD WELD'T	1
11	3116-816800	OUTRIGGER STOP BLOCK WELD'T	1
12	3116-905003	PIVOT PIN, REAR O/R SPADE ASSY	1
13	3116-905004	RETAIN PIN,REAR O/R SPADE ASSY	1
14	3116-905005	PIVOT PIN, JACKLEG SPADE ASSY	1
15	3116-905006	RETAIN PIN, JACKLEG SPADE ASSY	1
16	511-3000005	CYLINDER, FRONT OUTRIGGER	1
17	9057125	RETAINING RING, 1-1/4 INT	2

3116-912000, LH REAR OUTRIGGER ASSEMBLY (cont'd)

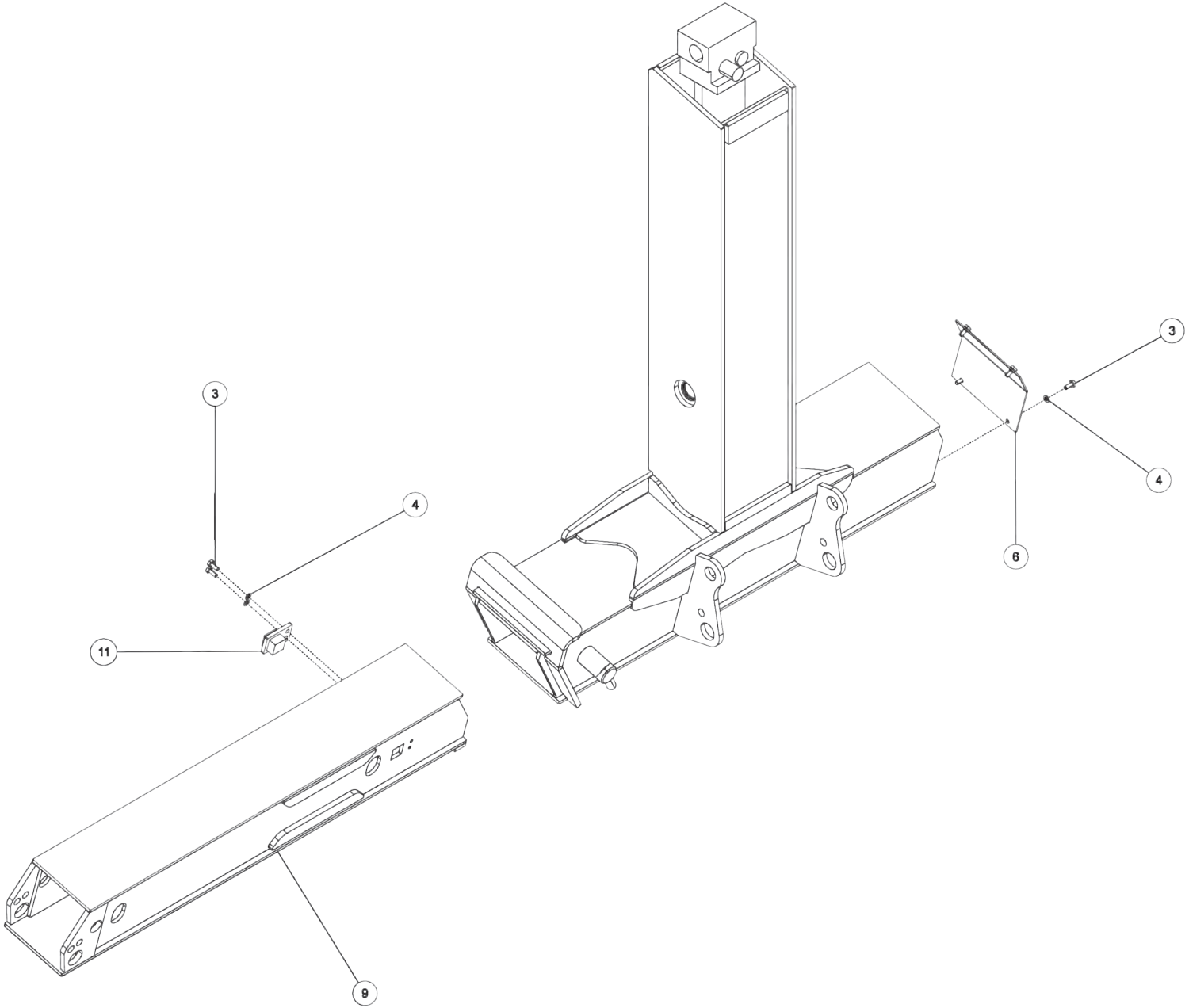

3116-912000, LH REAR OUTRIGGER ASSEMBLY (cont'd)

ITEM	PART NUMBER	DESCRIPTION	QTY
1	0300113	GREASE FITTING, 1/4-28 STR	1
2	0301522	ADAPTER, 6MJ-6MB	2
3	0400059	SCREW, 1/4-20X5/8 HHC GR5	6
4	0400452	LKWASHER, 1/4	6
5	3116-700006	PIN, LOWER JACK LEG CYLINDER	1
6	3116-712020	PANEL, COVER REAR OUTRIGGER	1
7	3116-812000	LH REAR OUTRIGGER WELD'T	1
8	3116-812500	REAR OUTRIGGER SPADE WELD'T	1
9	3116-814000	REAR INNER OUTRIGGER WELD'T	1
10	3116-814500	REAR OUTRIGGER PAD WELD'T	1
11	3116-816800	OUTRIGGER STOP BLOCK WELD'T	1
12	3116-905003	PIVOT PIN, REAR O/R SPADE ASSY	1
13	3116-905004	RETAIN PIN,REAR O/R SPADE ASSY	1
14	3116-905005	PIVOT PIN, JACKLEG SPADE ASSY	1
15	3116-905006	RETAIN PIN, JACKLEG SPADE ASSY	1
16	511-3000005	CYLINDER, FRONT OUTRIGGER	1
17	9057125	RETAINING RING, 1-1/4 INT	2

3116-912000, LH REAR OUTRIGGER ASSEMBLY (cont'd)

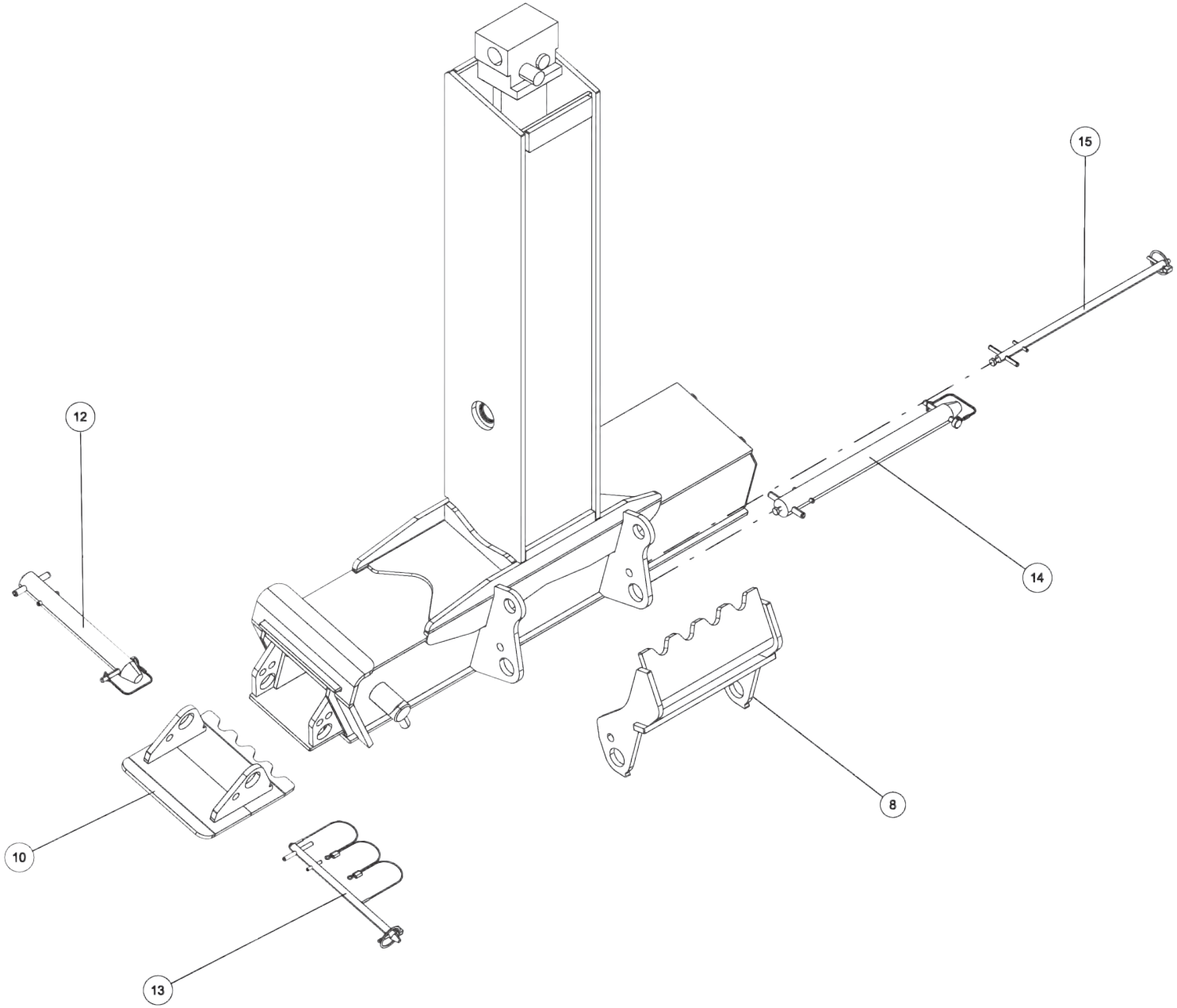

3116-912000, LH REAR OUTRIGGER ASSEMBLY (cont'd)

ITEM	PART NUMBER	DESCRIPTION	QTY
1	0300113	GREASE FITTING, 1/4-28 STR	1
2	0301522	ADAPTER, 6MJ-6MB	2
3	0400059	SCREW, 1/4-20X5/8 HHC GR5	6
4	0400452	LKWASHER, 1/4	6
5	3116-700006	PIN, LOWER JACK LEG CYLINDER	1
6	3116-712020	PANEL, COVER REAR OUTRIGGER	1
7	3116-812000	LH REAR OUTRIGGER WELD'T	1
8	3116-812500	REAR OUTRIGGER SPADE WELD'T	1
9	3116-814000	REAR INNER OUTRIGGER WELD'T	1
10	3116-814500	REAR OUTRIGGER PAD WELD'T	1
11	3116-816800	OUTRIGGER STOP BLOCK WELD'T	1
12	3116-905003	PIVOT PIN, REAR O/R SPADE ASSY	1
13	3116-905004	RETAIN PIN,REAR O/R SPADE ASSY	1
14	3116-905005	PIVOT PIN, JACKLEG SPADE ASSY	1
15	3116-905006	RETAIN PIN, JACKLEG SPADE ASSY	1
16	511-3000005	CYLINDER, FRONT OUTRIGGER	1
17	9057125	RETAINING RING, 1-1/4 INT	2

3116-913000, RH REAR OUTRIGGER ASSEMBLY

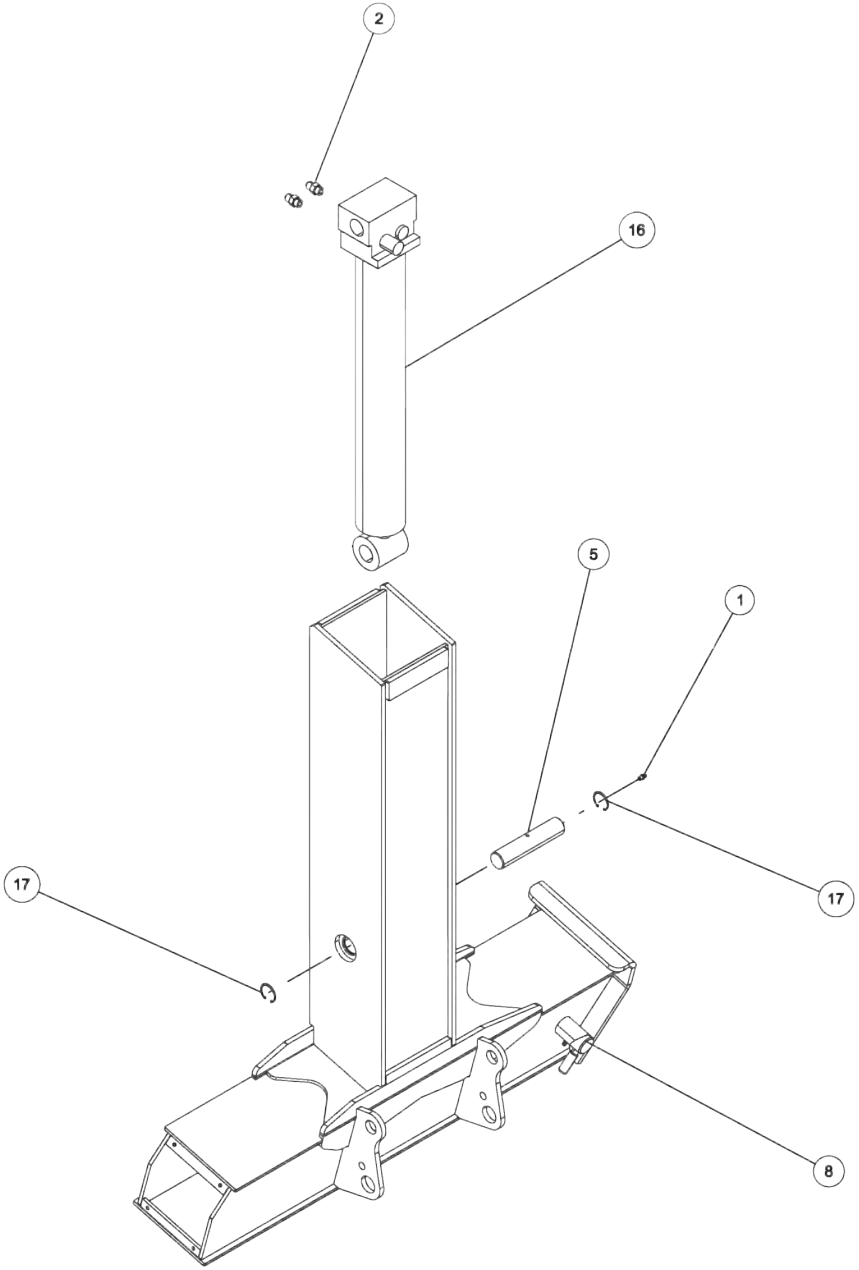

3116-913000, RH REAR OUTRIGGER ASSEMBLY (cont'd)

ITEM	PART NUMBER	DESCRIPTION	QTY
1	0300113	GREASE FITTING, 1/4-28 STR	1
2	0301522	ADAPTER, 6MJ-6MB	2
3	0400059	SCREW, 1/4-20X5/8 HHC GR5	6
4	0400452	LKWASHER, 1/4	6
5	3116-700006	PIN, LOWER JACK LEG CYLINDER	1
6	3116-712020	PANEL, COVER REAR OUTRIGGER	1
7	3116-812500	REAR OUTRIGGER SPADE WELD'T	1
8	3116-813000	RH REAR OUTRIGGER WELD'T	1
9	3116-814000	REAR INNER OUTRIGGER WELD'T	1
10	3116-814500	REAR OUTRIGGER PAD WELD'T	1
11	3116-816800	OUTRIGGER STOP BLOCK WELD'T	1
12	3116-905003	PIVOT PIN, REAR O/R SPADE ASSY	1
13	3116-905004	RETAIN PIN,REAR O/R SPADE ASSY	1
14	3116-905005	PIVOT PIN, JACKLEG SPADE ASSY	1
15	3116-905006	RETAIN PIN, JACKLEG SPADE ASSY	1
16	511-3000005	CYLINDER, FRONT OUTRIGGER	1
17	9057125	RETAINING RING, 1-1/4 INT	2

3116-913000, RH REAR OUTRIGGER ASSEMBLY (cont'd)

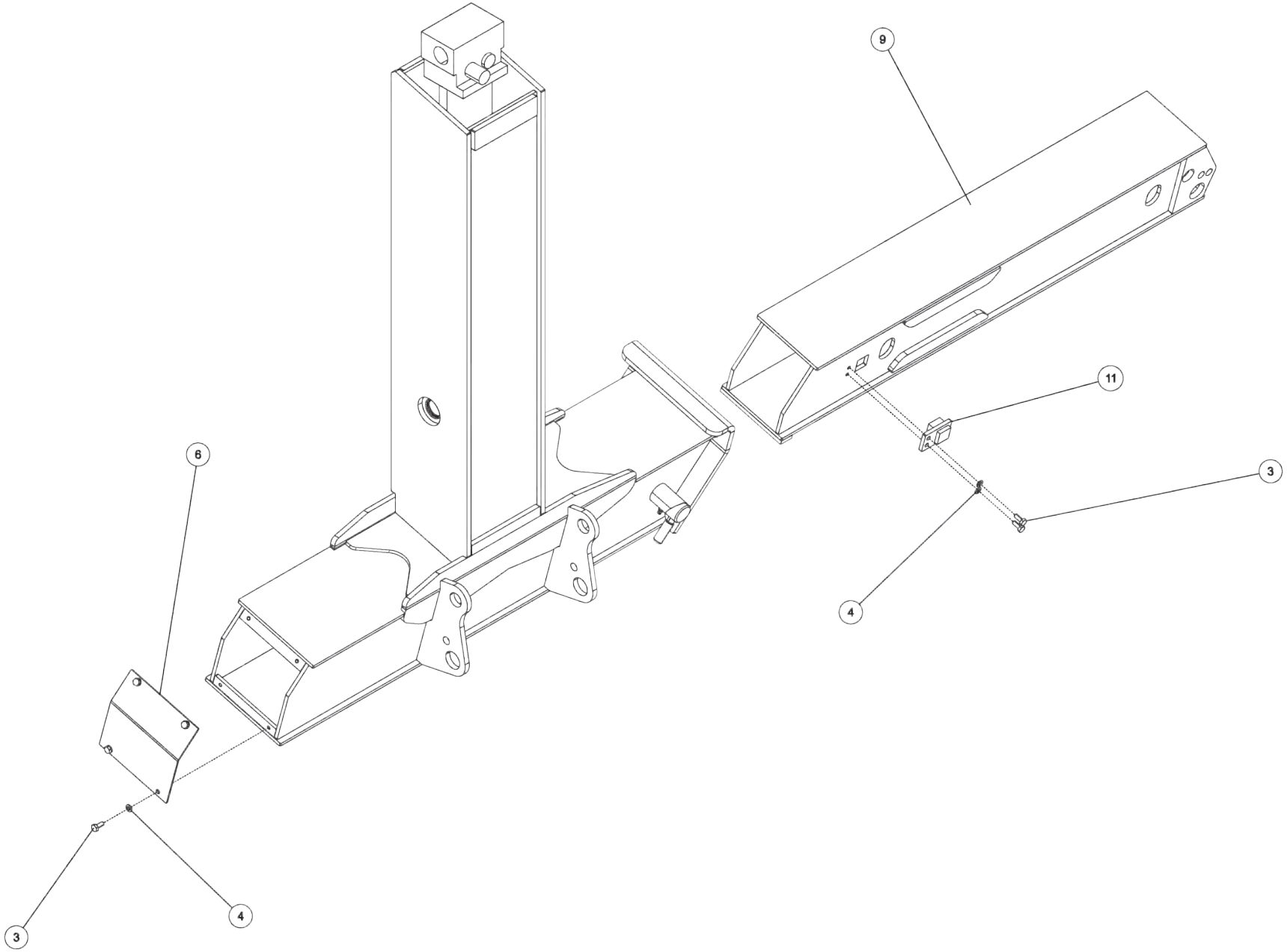

3116-913000, RH REAR OUTRIGGER ASSEMBLY (cont'd)

ITEM	PART NUMBER	DESCRIPTION	QTY
1	0300113	GREASE FITTING, 1/4-28 STR	1
2	0301522	ADAPTER, 6MJ-6MB	2
3	0400059	SCREW, 1/4-20X5/8 HHC GR5	6
4	0400452	LKWASHER, 1/4	6
5	3116-700006	PIN, LOWER JACK LEG CYLINDER	1
6	3116-712020	PANEL, COVER REAR OUTRIGGER	1
7	3116-812500	REAR OUTRIGGER SPADE WELD'T	1
8	3116-813000	RH REAR OUTRIGGER WELD'T	1
9	3116-814000	REAR INNER OUTRIGGER WELD'T	1
10	3116-814500	REAR OUTRIGGER PAD WELD'T	1
11	3116-816800	OUTRIGGER STOP BLOCK WELD'T	1
12	3116-905003	PIVOT PIN, REAR O/R SPADE ASSY	1
13	3116-905004	RETAIN PIN,REAR O/R SPADE ASSY	1
14	3116-905005	PIVOT PIN, JACKLEG SPADE ASSY	1
15	3116-905006	RETAIN PIN, JACKLEG SPADE ASSY	1
16	511-3000005	CYLINDER, FRONT OUTRIGGER	1
17	9057125	RETAINING RING, 1-1/4 INT	2

3116-913000, RH REAR OUTRIGGER ASSEMBLY (cont'd)

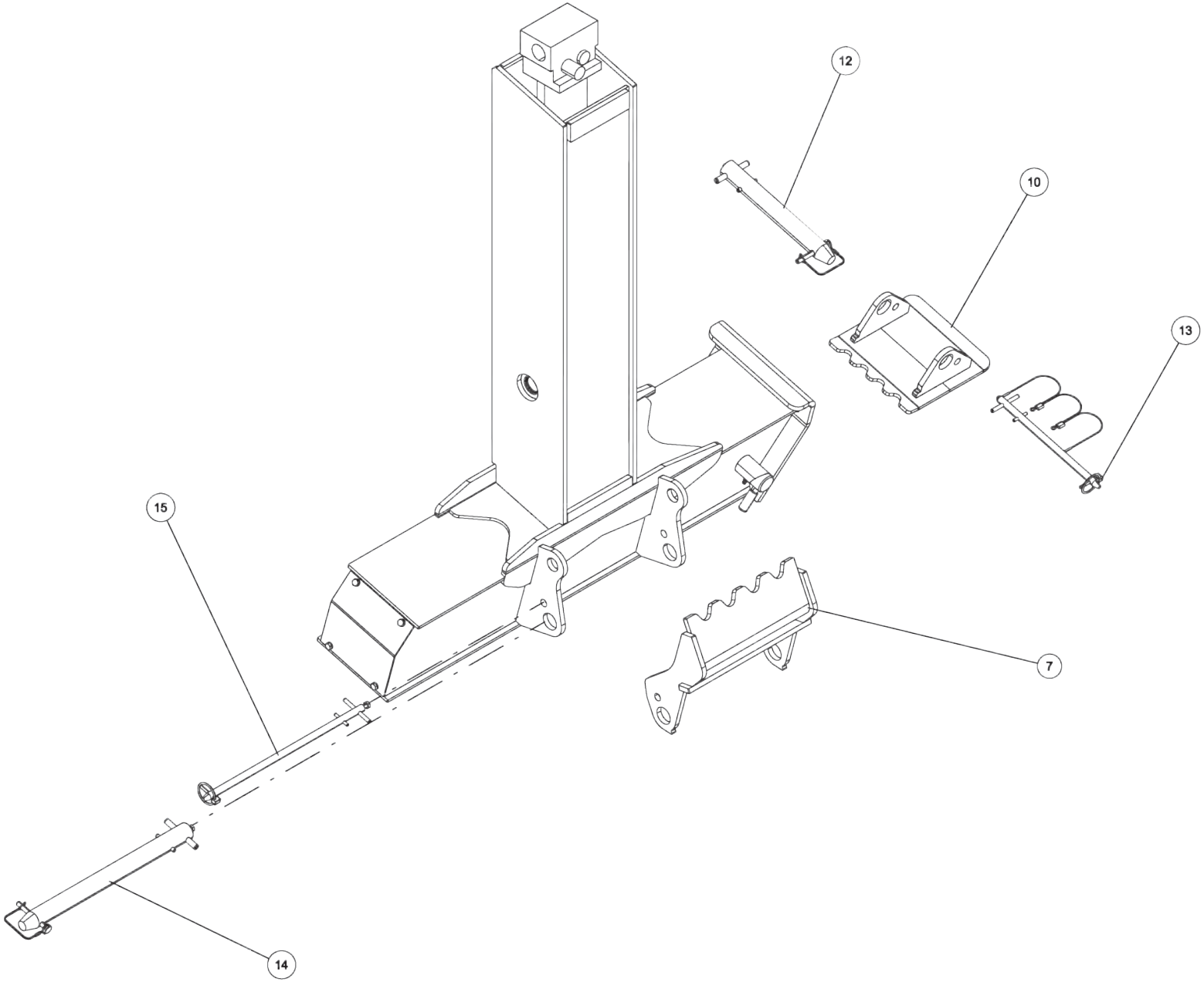

3116-913000, RH REAR OUTRIGGER ASSEMBLY (cont'd)

ITEM	PART NUMBER	DESCRIPTION	QTY
1	0300113	GREASE FITTING, 1/4-28 STR	1
2	0301522	ADAPTER, 6MJ-6MB	2
3	0400059	SCREW, 1/4-20X5/8 HHC GR5	6
4	0400452	LKWASHER, 1/4	6
5	3116-700006	PIN, LOWER JACK LEG CYLINDER	1
6	3116-712020	PANEL, COVER REAR OUTRIGGER	1
7	3116-812500	REAR OUTRIGGER SPADE WELD'T	1
8	3116-813000	RH REAR OUTRIGGER WELD'T	1
9	3116-814000	REAR INNER OUTRIGGER WELD'T	1
10	3116-814500	REAR OUTRIGGER PAD WELD'T	1
11	3116-816800	OUTRIGGER STOP BLOCK WELD'T	1
12	3116-905003	PIVOT PIN, REAR O/R SPADE ASSY	1
13	3116-905004	RETAIN PIN,REAR O/R SPADE ASSY	1
14	3116-905005	PIVOT PIN, JACKLEG SPADE ASSY	1
15	3116-905006	RETAIN PIN, JACKLEG SPADE ASSY	1
16	511-3000005	CYLINDER, FRONT OUTRIGGER	1
17	9057125	RETAINING RING, 1-1/4 INT	2

3116-916000, FRONT OUTRIGGER ASSEMBLY

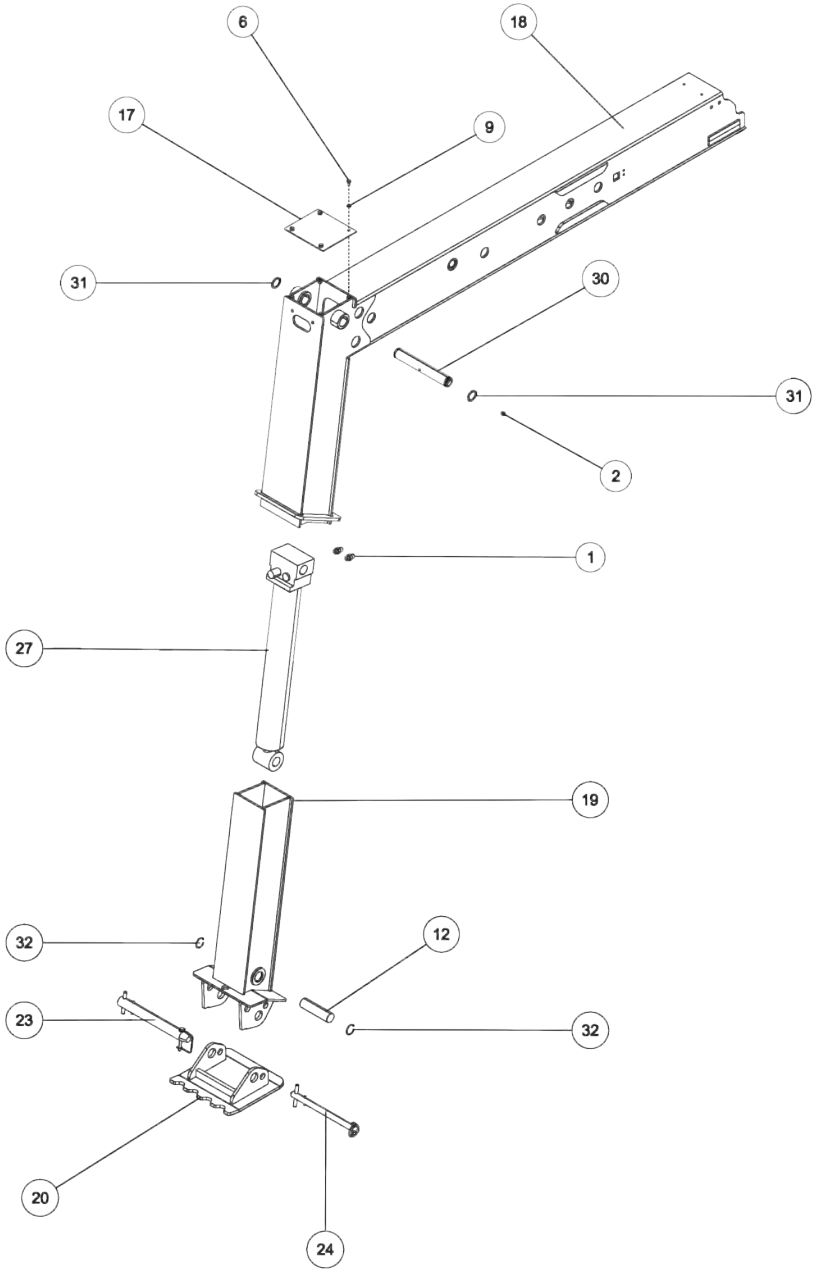

3116-916000, FRONT OUTRIGGER ASSEMBLY (cont'd)

ITEM	PART NUMBER	DESCRIPTION	QTY
1	0301522	ADAPTER, 6MJ-6MB	3
2	0301895	GREASE FITTING, 1/8 STR PTF	1
3	0302510	ADAPTER, 6MJ-6MBL	1
4	0310106	SPRING,EXTENSION 1.625 DX17 L	1
5	0400059	SCREW, 1/4-20X5/8 HHC GR5	2
6	0400060	SCREW, 1/4-20X1/2 HHC GR5	4
7	0400126	SCREW, 3/8-16X1 HHC GR5	4
8	0400392	NUT, 3/8-16 LOK	4
9	0400452	LKWASHER, 1/4	6
10	0400510	WASHER, 3/4	2
11	3116-700004	PIN,FRT OUTRIGGER INNER ROLLER	1
12	3116-700005	PIN, FRT OUTRIGGER LOWER CYL	1
13	3116-700016	PIN - OUTRIGGER EXTEND HYD CYL	1
14	3116-716001	ROLLER,FRONT OUTRIGGER	2
15	3116-716002	PLATE,ROLLER MTG FRT OUTRIGGER	2
16	3116-716003	SPACER, ROLLER FRONT OUTRIGGER	1
17	3116-716004	PLATE, COVER - FRONT OUTRIGGER	1
18	3116-816000	FRONT OUTRIGGER WELD'T	1
19	3116-816600	FRONT INNER OUTRIGGER (SWIVEL)	1
20	3116-816700	FRONT OUTRIGGER SPADE WELD'T	1
21	3116-816800	OUTRIGGER STOP BLOCK WELD'T	1
22	3116-816900	HANDLE, WLMT - MANUAL JACK LEG	1
23	3116-905001	PIVOT PIN, FRT O/R SPADE ASSY	1
24	3116-905002	RETAIN PIN, FRT O/R SPADE ASSY	1
25	3116-916300	HOSE TENSIONER SHEAVE ASSY	1
26	511-2000001	CYL, FRONT OUTRIGGER EXTENSION	1
27	511-3000005	CYLINDER, FRONT OUTRIGGER	1
28	516-0600002	TUBE,HYD ASSY 3/8X61 STL TUBE	1
29	516-0600003	TUBE,HYD ASSY 3/8X59. STL TUBE	1
30	810350002	PIN - UPPER TILT CYL.	1
31	9056125	1.25 NOM HVY DUTY RET RING EXT	2
32	9057125	RETAINING RING, 1-1/4 INT	2
33	HD0158	SNAP RING, 1INTERNAL	2
34	HD0160	SNAP RING, 3/4EXTERNAL	2

3116-916000, FRONT OUTRIGGER ASSEMBLY (cont'd)

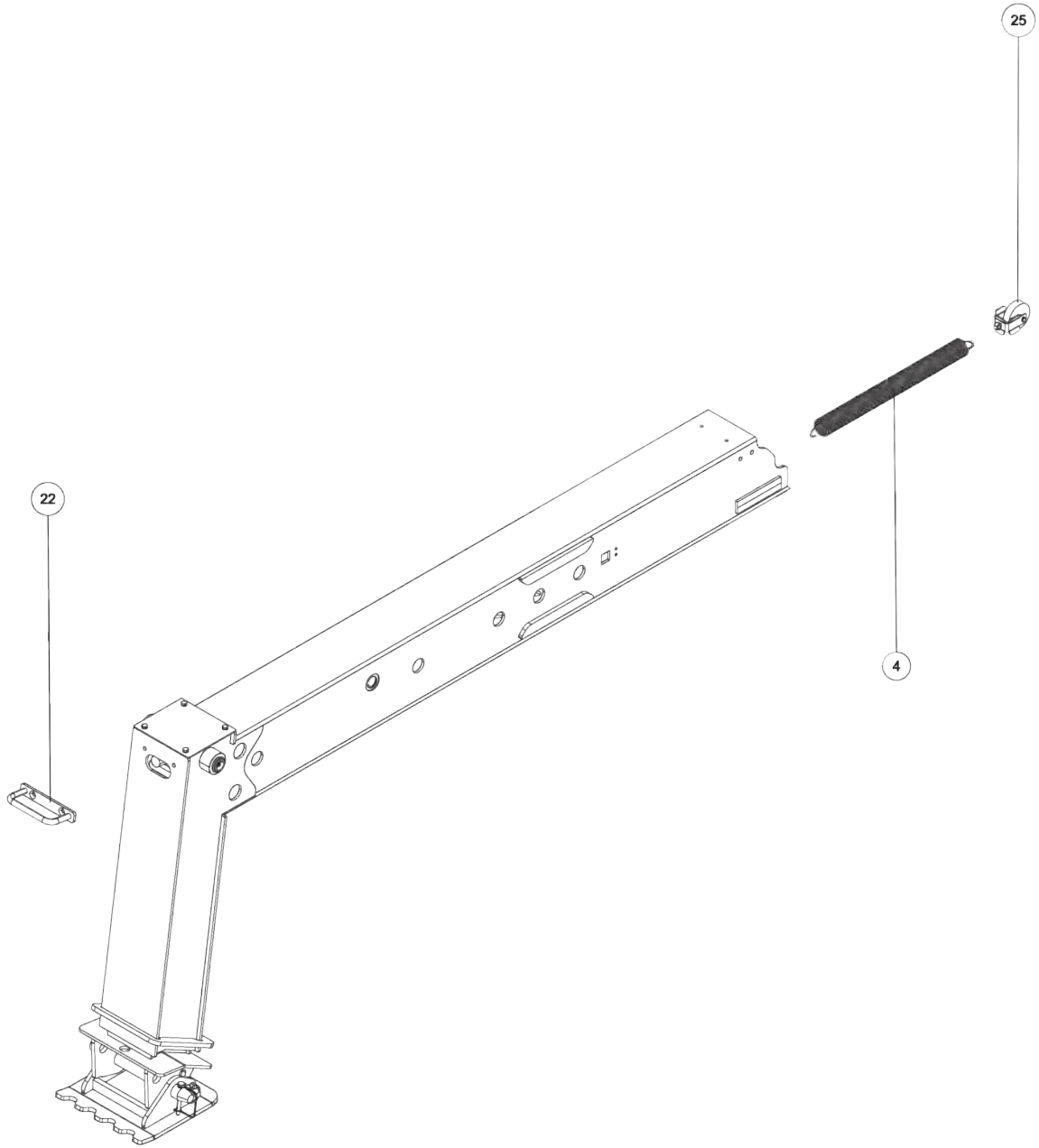

3116-916000, FRONT OUTRIGGER ASSEMBLY (cont'd)

ITEM	PART NUMBER	DESCRIPTION	QTY
1	0301522	ADAPTER, 6MJ-6MB	3
2	0301895	GREASE FITTING, 1/8 STR PTF	1
3	0302510	ADAPTER, 6MJ-6MBL	1
4	0310106	SPRING,EXTENSION 1.625 DX17 L	1
5	0400059	SCREW, 1/4-20X5/8 HHC GR5	2
6	0400060	SCREW, 1/4-20X1/2 HHC GR5	4
7	0400126	SCREW, 3/8-16X1 HHC GR5	4
8	0400392	NUT, 3/8-16 LOK	4
9	0400452	LKWASHER, 1/4	6
10	0400510	WASHER, 3/4	2
11	3116-700004	PIN,FRT OUTRIGGER INNER ROLLER	1
12	3116-700005	PIN, FRT OUTRIGGER LOWER CYL	1
13	3116-700016	PIN - OUTRIGGER EXTEND HYD CYL	1
14	3116-716001	ROLLER,FRONT OUTRIGGER	2
15	3116-716002	PLATE,ROLLER MTG FRT OUTRIGGER	2
16	3116-716003	SPACER, ROLLER FRONT OUTRIGGER	1
17	3116-716004	PLATE, COVER - FRONT OUTRIGGER	1
18	3116-816000	FRONT OUTRIGGER WELD'T	1
19	3116-816600	FRONT INNER OUTRIGGER (SWIVEL)	1
20	3116-816700	FRONT OUTRIGGER SPADE WELD'T	1
21	3116-816800	OUTRIGGER STOP BLOCK WELD'T	1
22	3116-816900	HANDLE, WLMT - MANUAL JACK LEG	1
23	3116-905001	PIVOT PIN, FRT O/R SPADE ASSY	1
24	3116-905002	RETAIN PIN, FRT O/R SPADE ASSY	1
25	3116-916300	HOSE TENSIONER SHEAVE ASSY	1
26	511-2000001	CYL, FRONT OUTRIGGER EXTENSION	1
27	511-3000005	CYLINDER, FRONT OUTRIGGER	1
28	516-0600002	TUBE,HYD ASSY 3/8X61 STL TUBE	1
29	516-0600003	TUBE,HYD ASSY 3/8X59. STL TUBE	1
30	810350002	PIN - UPPER TILT CYL.	1
31	9056125	1.25 NOM HVY DUTY RET RING EXT	2
32	9057125	RETAINING RING, 1-1/4 INT	2
33	HD0158	SNAP RING, 1INTERNAL	2
34	HD0160	SNAP RING, 3/4EXTERNAL	2

3116-916000, FRONT OUTRIGGER ASSEMBLY (cont'd)

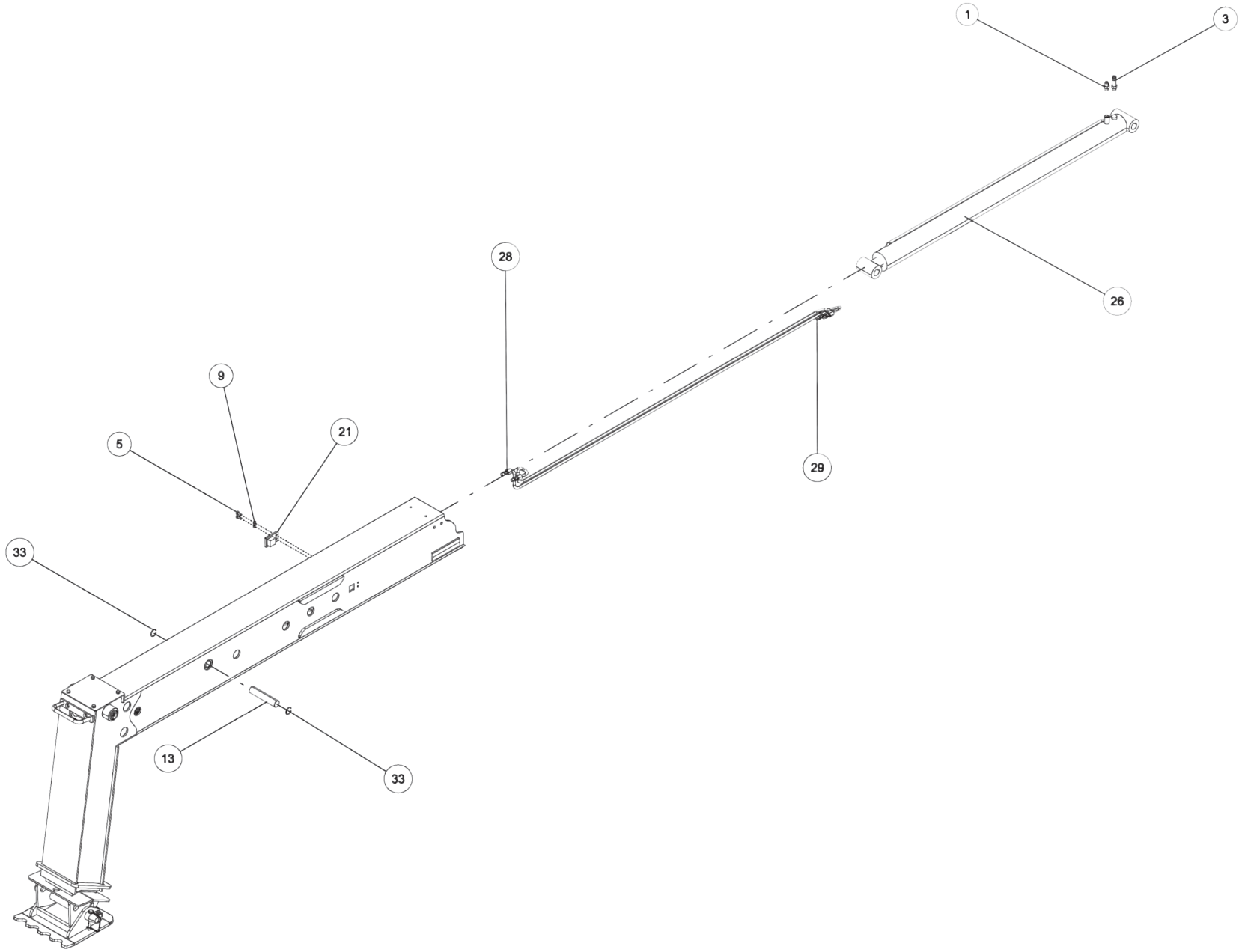

3116-916000, FRONT OUTRIGGER ASSEMBLY (cont'd)

ITEM	PART NUMBER	DESCRIPTION	QTY
1	0301522	ADAPTER, 6MJ-6MB	3
2	0301895	GREASE FITTING, 1/8 STR PTF	1
3	0302510	ADAPTER, 6MJ-6MBL	1
4	0310106	SPRING,EXTENSION 1.625 DX17 L	1
5	0400059	SCREW, 1/4-20X5/8 HHC GR5	2
6	0400060	SCREW, 1/4-20X1/2 HHC GR5	4
7	0400126	SCREW, 3/8-16X1 HHC GR5	4
8	0400392	NUT, 3/8-16 LOK	4
9	0400452	LKWASHER, 1/4	6
10	0400510	WASHER, 3/4	2
11	3116-700004	PIN,FRT OUTRIGGER INNER ROLLER	1
12	3116-700005	PIN, FRT OUTRIGGER LOWER CYL	1
13	3116-700016	PIN - OUTRIGGER EXTEND HYD CYL	1
14	3116-716001	ROLLER,FRONT OUTRIGGER	2
15	3116-716002	PLATE,ROLLER MTG FRT OUTRIGGER	2
16	3116-716003	SPACER, ROLLER FRONT OUTRIGGER	1
17	3116-716004	PLATE, COVER - FRONT OUTRIGGER	1
18	3116-816000	FRONT OUTRIGGER WELD'T	1
19	3116-816600	FRONT INNER OUTRIGGER (SWIVEL)	1
20	3116-816700	FRONT OUTRIGGER SPADE WELD'T	1
21	3116-816800	OUTRIGGER STOP BLOCK WELD'T	1
22	3116-816900	HANDLE, WLMT - MANUAL JACK LEG	1
23	3116-905001	PIVOT PIN, FRT O/R SPADE ASSY	1
24	3116-905002	RETAIN PIN, FRT O/R SPADE ASSY	1
25	3116-916300	HOSE TENSIONER SHEAVE ASSY	1
26	511-2000001	CYL, FRONT OUTRIGGER EXTENSION	1
27	511-3000005	CYLINDER, FRONT OUTRIGGER	1
28	516-0600002	TUBE,HYD ASSY 3/8X61 STL TUBE	1
29	516-0600003	TUBE,HYD ASSY 3/8X59. STL TUBE	1
30	810350002	PIN - UPPER TILT CYL.	1
31	9056125	1.25 NOM HVY DUTY RET RING EXT	2
32	9057125	RETAINING RING, 1-1/4 INT	2
33	HD0158	SNAP RING, 1INTERNAL	2
34	HD0160	SNAP RING, 3/4EXTERNAL	2

3116-916000, FRONT OUTRIGGER ASSEMBLY (cont'd)

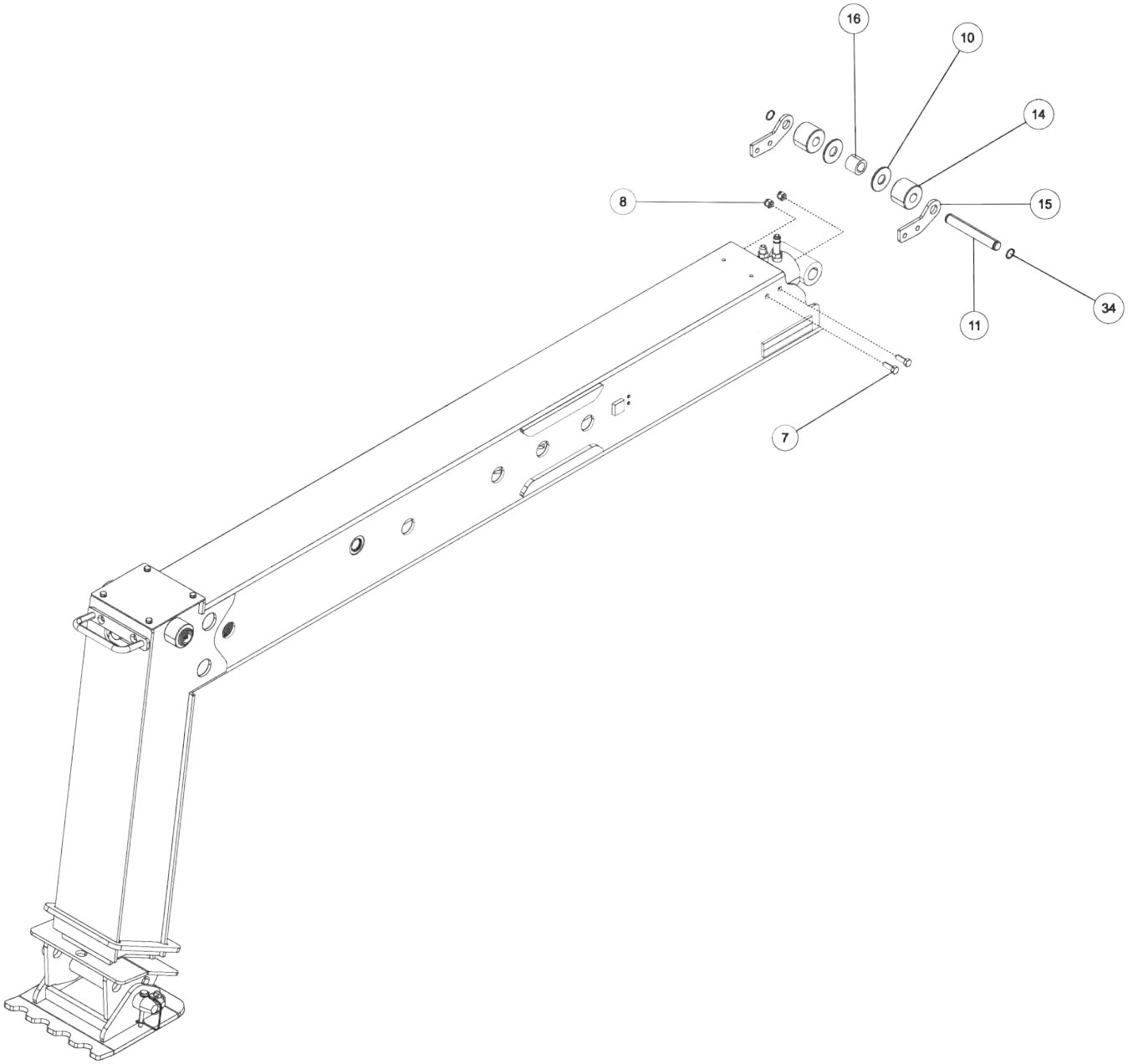

3116-916000, FRONT OUTRIGGER ASSEMBLY (cont'd)

ITEM	PART NUMBER	DESCRIPTION	QTY
1	0301522	ADAPTER, 6MJ-6MB	3
2	0301895	GREASE FITTING, 1/8 STR PTF	1
3	0302510	ADAPTER, 6MJ-6MBL	1
4	0310106	SPRING,EXTENSION 1.625 DX17 L	1
5	0400059	SCREW, 1/4-20X5/8 HHC GR5	2
6	0400060	SCREW, 1/4-20X1/2 HHC GR5	4
7	0400126	SCREW, 3/8-16X1 HHC GR5	4
8	0400392	NUT, 3/8-16 LOK	4
9	0400452	LKWASHER, 1/4	6
10	0400510	WASHER, 3/4	2
11	3116-700004	PIN,FRT OUTRIGGER INNER ROLLER	1
12	3116-700005	PIN, FRT OUTRIGGER LOWER CYL	1
13	3116-700016	PIN - OUTRIGGER EXTEND HYD CYL	1
14	3116-716001	ROLLER,FRONT OUTRIGGER	2
15	3116-716002	PLATE,ROLLER MTG FRT OUTRIGGER	2
16	3116-716003	SPACER, ROLLER FRONT OUTRIGGER	1
17	3116-716004	PLATE, COVER - FRONT OUTRIGGER	1
18	3116-816000	FRONT OUTRIGGER WELD'T	1
19	3116-816600	FRONT INNER OUTRIGGER (SWIVEL)	1
20	3116-816700	FRONT OUTRIGGER SPADE WELD'T	1
21	3116-816800	OUTRIGGER STOP BLOCK WELD'T	1
22	3116-816900	HANDLE, WLMT - MANUAL JACK LEG	1
23	3116-905001	PIVOT PIN, FRT O/R SPADE ASSY	1
24	3116-905002	RETAIN PIN, FRT O/R SPADE ASSY	1
25	3116-916300	HOSE TENSIONER SHEAVE ASSY	1
26	511-2000001	CYL, FRONT OUTRIGGER EXTENSION	1
27	511-3000005	CYLINDER, FRONT OUTRIGGER	1
28	516-0600002	TUBE,HYD ASSY 3/8X61 STL TUBE	1
29	516-0600003	TUBE,HYD ASSY 3/8X59. STL TUBE	1
30	810350002	PIN - UPPER TILT CYL.	1
31	9056125	1.25 NOM HVY DUTY RET RING EXT	2
32	9057125	RETAINING RING, 1-1/4 INT	2
33	HD0158	SNAP RING, 1INTERNAL	2
34	HD0160	SNAP RING, 3/4EXTERNAL	2

09017889, WRECKER FRAME ASSY - 600R

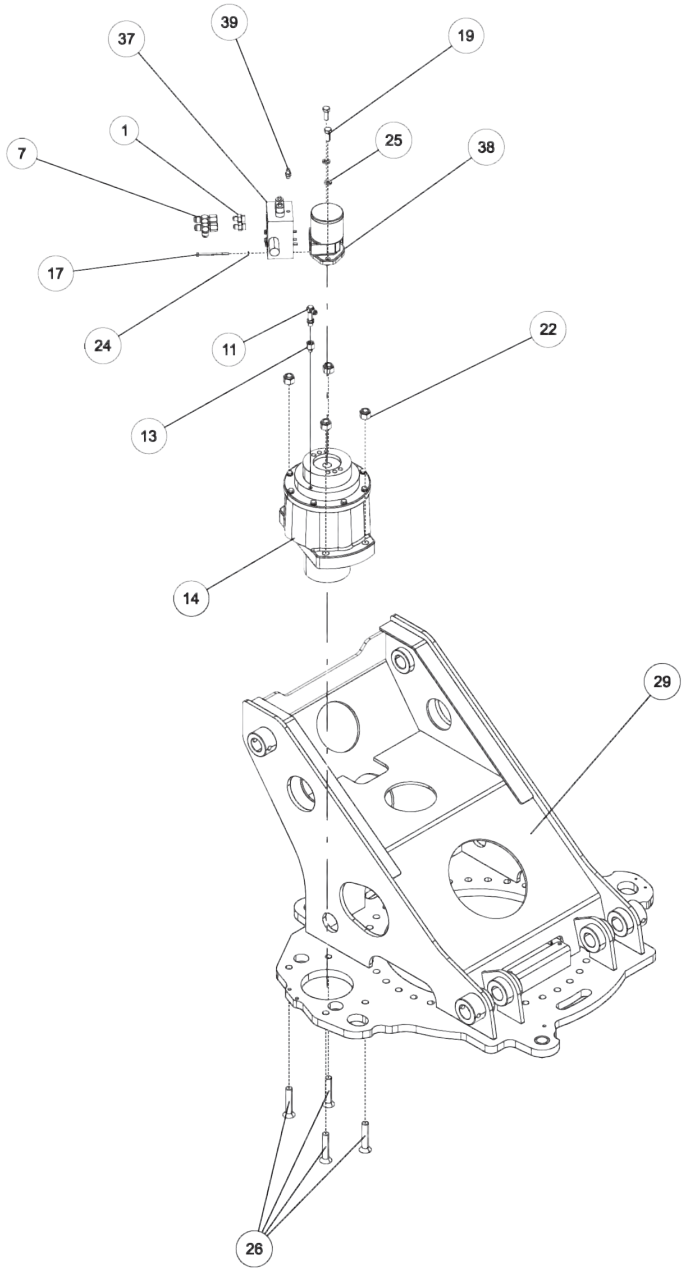

09017889, WRECKER FRAME ASSY - 600R (cont'd)

ITEM	PART NUMBER	DESCRIPTION	QTY
1	0300044	FITT, HYD CONN. 6MJ-8MB	2
2	0300787	HOSE HYD, 53" LG	2
3	0301377	FITTING, TEE,3/8" JIC	2
4	0301471	HOSE, 30" 8FJK-8M3K-8FJX90	1
5	0301522	ADAPTER, 6MJ-6MB	4
6	0301998	HOSE HYD, 24" LG	4
7	0302052	TEE, 8MJ-8FJX-8MJ RUN	2
8	0303036	8 FJ CAP	1
9	0303182	HOSE HYD, 41"	3
10	0303373	CLAMP INSULATED 2"2	
11	0303761	FITTING, ELBOW 6MJ-6MB90L	1
12	0303994	HOSE ASSY- 22"	1
13	0307106	FITT, CONNECTOR 4MB-6FB	1
14	0307651	PLANETARY DRIVE W/ BRAKE 105E	1
15	0311640	HOSE ASSY - 12"LG	2
16	0400070	SCREW, 1/4-20X1 HHC GR5	2
17	0400081	SCREW, 1/4-20X3-1/2 HHC GR5	4
18	0400122	SCREW, 3/8-16X1-1/4 HHC GR5	2
19	0400177	SCREW, 1/2-13X1-1/4 HHC GR5	3
20	0400237	SCREW, 1/2-13X4 HHC GR5	3
21	0400408	NUT, 1/2-13 LOK	4
22	0400431	NUT, 3/4-10 LOK GR8	4
23	0400451	WASHER, 1/4	2
24	0400452	LKWASHER, 1/4	6
25	0400491	LKWASHER, 1/2	2
26	0400762	SCREW, 3/4-10X3-3/4 FHS	4
27	07025173	SPACER, 600R LIFT CYL	2
28	07029839	PLATE, PROX SENSOR FLAG 600R	1
29	08015482	WRECKER FRAME WLMT - 600R	1
30	0910238	SWING LIMIT VALVE ASSY - 1140	1
31	28057005	PLATE - SWIVEL PLATE FRONT MTG	1
32	28057006	PLATE - SWIVEL PLATE SIDE MTG	2
33	28059003	HYDRAULIC SWIVEL ASSEMBLY	1
34	3116-700008	PIN, MAIN BOOM PIVOT	1
35	3116-700009	PIN, MAIN BOOM LOWER LIFT CYL	2
36	511-5000002	CYL, HYD - BOOM LIFT	2
37	512-080001	VALVE, SWING CONTROL	1
38	515-000101	HYDRAULIC MOTOR TC SERIES	1
39	HC1291	FITTING, 4MJ-4MB STR THR	1

09017889, WRECKER FRAME ASSY - 600R (cont'd)

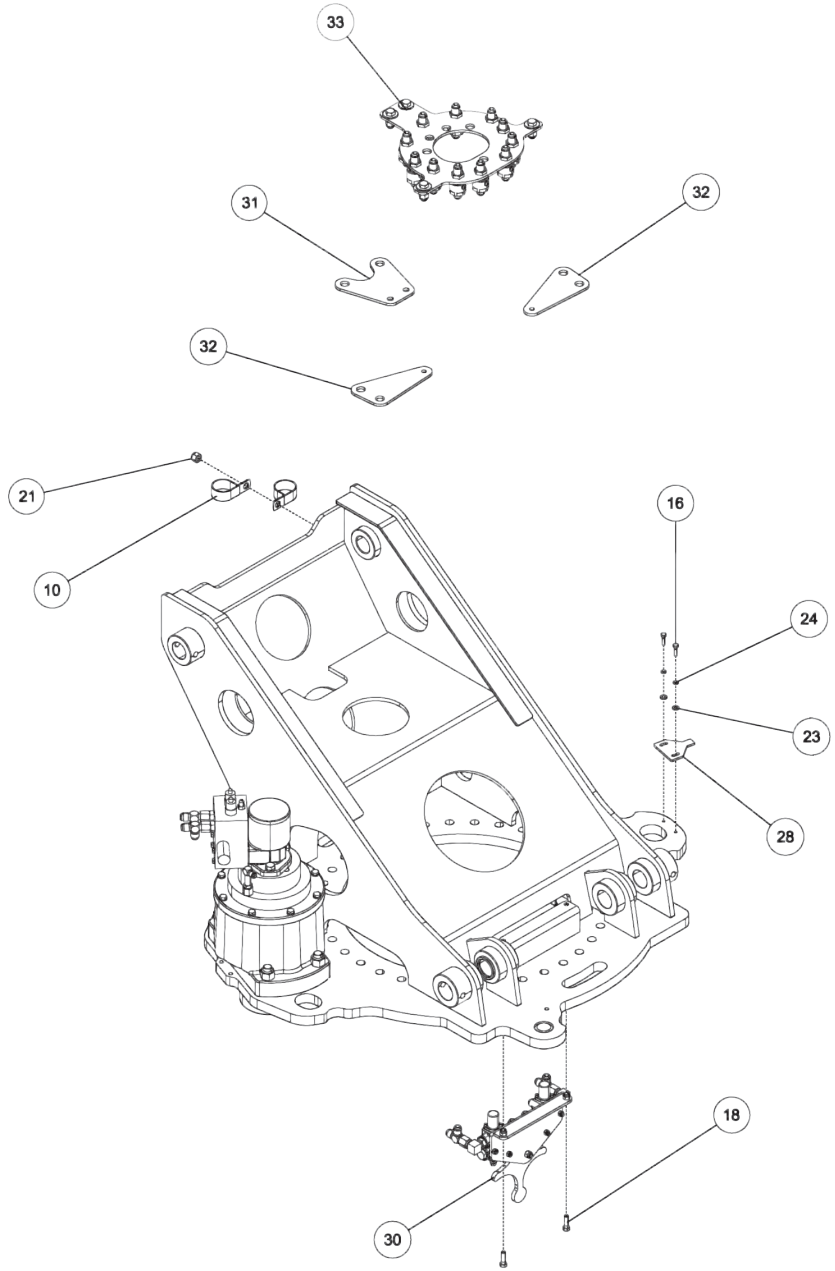

09017889, WRECKER FRAME ASSY - 600R (cont'd)

ITEM	PART NUMBER	DESCRIPTION	QTY
1	0300044	FITT, HYD CONN. 6MJ-8MB	2
2	0300787	HOSE HYD, 53" LG	2
3	0301377	FITTING, TEE,3/8" JIC	2
4	0301471	HOSE, 30" 8FJK-8M3K-8FJX90	1
5	0301522	ADAPTER, 6MJ-6MB	4
6	0301998	HOSE HYD, 24" LG	4
7	0302052	TEE, 8MJ-8FJX-8MJ RUN	2
8	0303036	8 FJ CAP	1
9	0303182	HOSE HYD, 41"	3
10	0303373	CLAMP INSULATED 2"2	
11	0303761	FITTING, ELBOW 6MJ-6MB90L	1
12	0303994	HOSE ASSY- 22"	1
13	0307106	FITT, CONNECTOR 4MB-6FB	1
14	0307651	PLANETARY DRIVE W/ BRAKE 105E	1
15	0311640	HOSE ASSY - 12"LG	2
16	0400070	SCREW, 1/4-20X1 HHC GR5	2
17	0400081	SCREW, 1/4-20X3-1/2 HHC GR5	4
18	0400122	SCREW, 3/8-16X1-1/4 HHC GR5	2
19	0400177	SCREW, 1/2-13X1-1/4 HHC GR5	3
20	0400237	SCREW, 1/2-13X4 HHC GR5	3
21	0400408	NUT, 1/2-13 LOK	4
22	0400431	NUT, 3/4-10 LOK GR8	4
23	0400451	WASHER, 1/4	2
24	0400452	LKWASHER, 1/4	6
25	0400491	LKWASHER, 1/2	2
26	0400762	SCREW, 3/4-10X3-3/4 FHS	4
27	07025173	SPACER, 600R LIFT CYL	2
28	07029839	PLATE, PROX SENSOR FLAG 600R	1
29	08015482	WRECKER FRAME WLMT - 600R	1
30	0910238	SWING LIMIT VALVE ASSY - 1140	1
31	28057005	PLATE - SWIVEL PLATE FRONT MTG	1
32	28057006	PLATE - SWIVEL PLATE SIDE MTG	2
33	28059003	HYDRAULIC SWIVEL ASSEMBLY	1
34	3116-700008	PIN, MAIN BOOM PIVOT	1
35	3116-700009	PIN, MAIN BOOM LOWER LIFT CYL	2
36	511-5000002	CYL, HYD - BOOM LIFT	2
37	512-080001	VALVE, SWING CONTROL	1
38	515-000101	HYDRAULIC MOTOR TC SERIES	1
39	HC1291	FITTING, 4MJ-4MB STR THR	1

09017889, WRECKER FRAME ASSY - 600R (cont'd)

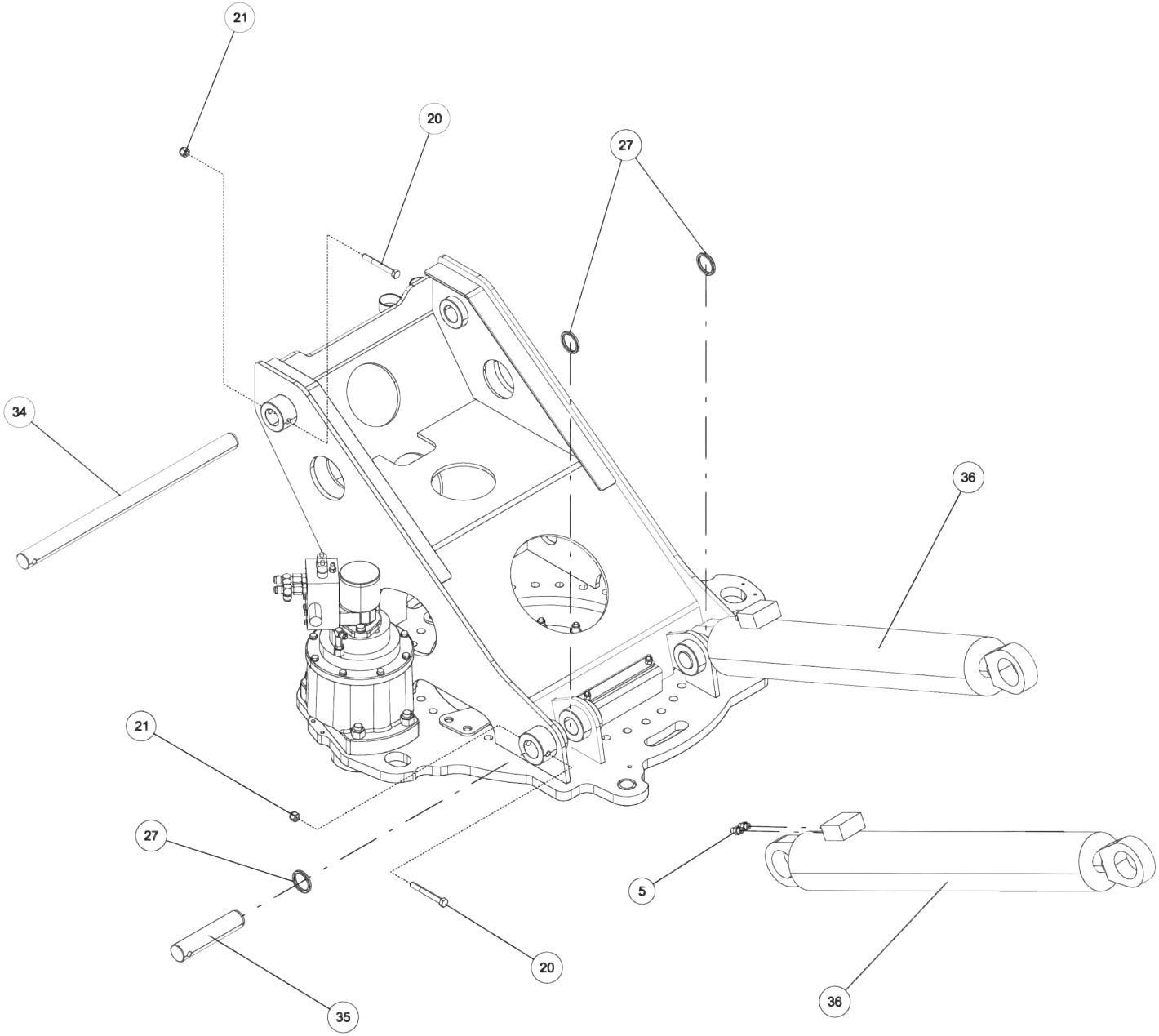

09017889, WRECKER FRAME ASSY - 600R (cont'd)

ITEM	PART NUMBER	DESCRIPTION	QTY
1	0300044	FITT, HYD CONN. 6MJ-8MB	2
2	0300787	HOSE HYD, 53" LG	2
3	0301377	FITTING, TEE,3/8" JIC	2
4	0301471	HOSE, 30" 8FJK-8M3K-8FJX90	1
5	0301522	ADAPTER, 6MJ-6MB	4
6	0301998	HOSE HYD, 24" LG	4
7	0302052	TEE, 8MJ-8FJX-8MJ RUN	2
8	0303036	8 FJ CAP	1
9	0303182	HOSE HYD, 41"	3
10	0303373	CLAMP INSULATED 2"2	
11	0303761	FITTING, ELBOW 6MJ-6MB90L	1
12	0303994	HOSE ASSY- 22"	1
13	0307106	FITT, CONNECTOR 4MB-6FB	1
14	0307651	PLANETARY DRIVE W/ BRAKE 105E	1
15	0311640	HOSE ASSY - 12"LG	2
16	0400070	SCREW, 1/4-20X1 HHC GR5	2
17	0400081	SCREW, 1/4-20X3-1/2 HHC GR5	4
18	0400122	SCREW, 3/8-16X1-1/4 HHC GR5	2
19	0400177	SCREW, 1/2-13X1-1/4 HHC GR5	3
20	0400237	SCREW, 1/2-13X4 HHC GR5	3
21	0400408	NUT, 1/2-13 LOK	4
22	0400431	NUT, 3/4-10 LOK GR8	4
23	0400451	WASHER, 1/4	2
24	0400452	LKWASHER, 1/4	6
25	0400491	LKWASHER, 1/2	2
26	0400762	SCREW, 3/4-10X3-3/4 FHS	4
27	07025173	SPACER, 600R LIFT CYL	2
28	07029839	PLATE, PROX SENSOR FLAG 600R	1
29	08015482	WRECKER FRAME WLMT - 600R	1
30	0910238	SWING LIMIT VALVE ASSY - 1140	1
31	28057005	PLATE - SWIVEL PLATE FRONT MTG	1
32	28057006	PLATE - SWIVEL PLATE SIDE MTG	2
33	28059003	HYDRAULIC SWIVEL ASSEMBLY	1
34	3116-700008	PIN, MAIN BOOM PIVOT	1
35	3116-700009	PIN, MAIN BOOM LOWER LIFT CYL	2
36	511-5000002	CYL, HYD - BOOM LIFT	2
37	512-080001	VALVE, SWING CONTROL	1
38	515-000101	HYDRAULIC MOTOR TC SERIES	1
39	HC1291	FITTING, 4MJ-4MB STR THR	1

09017889, WRECKER FRAME ASSY - 600R (cont'd)

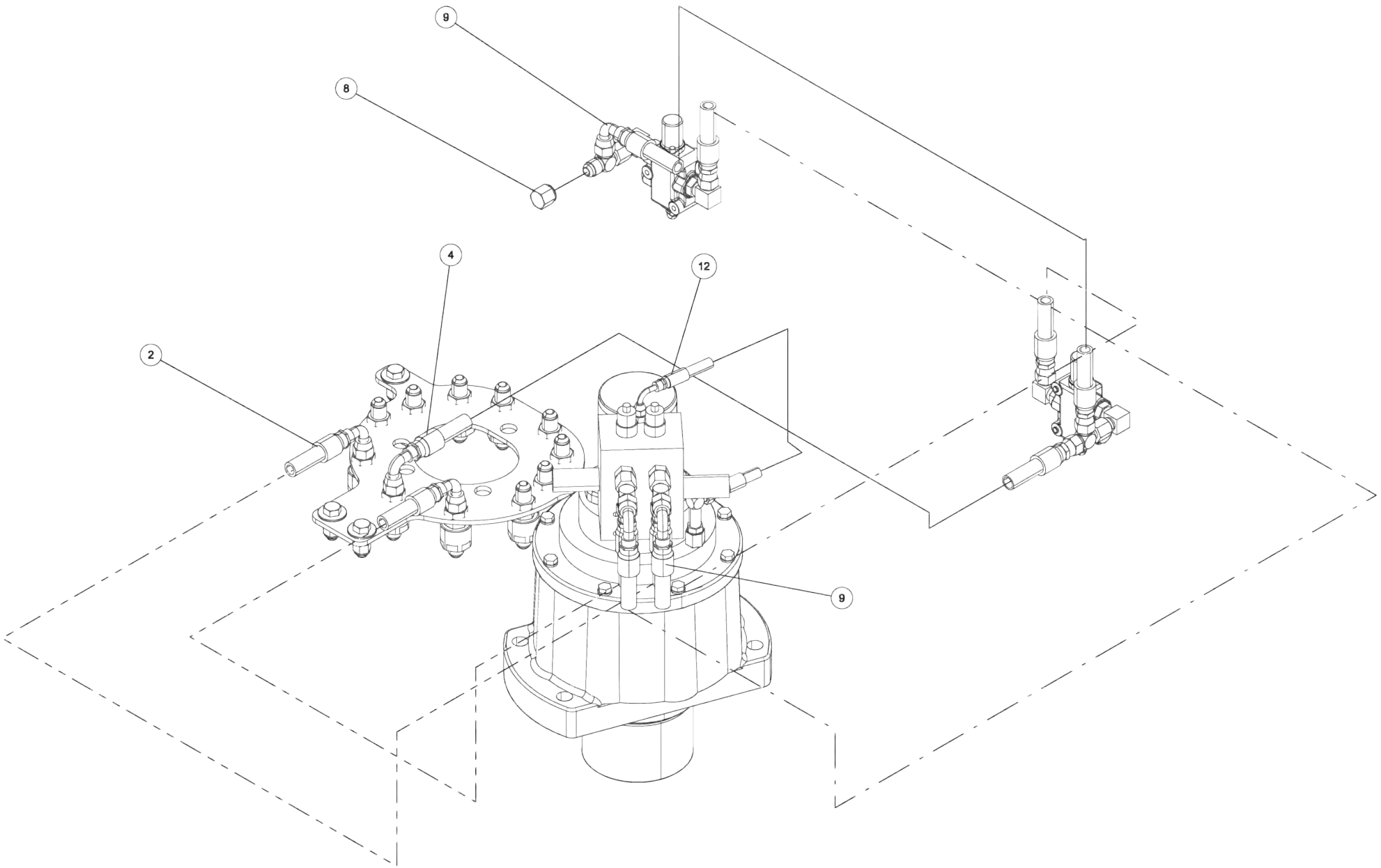

09017889, WRECKER FRAME ASSY - 600R (cont'd)

ITEM	PART NUMBER	DESCRIPTION	QTY
1	0300044	FITT, HYD CONN. 6MJ-8MB	2
2	0300787	HOSE HYD, 53" LG	2
3	0301377	FITTING, TEE,3/8" JIC	2
4	0301471	HOSE, 30" 8FJK-8M3K-8FJX90	1
5	0301522	ADAPTER, 6MJ-6MB	4
6	0301998	HOSE HYD, 24" LG	4
7	0302052	TEE, 8MJ-8FJX-8MJ RUN	2
8	0303036	8 FJ CAP	1
9	0303182	HOSE HYD, 41"	3
10	0303373	CLAMP INSULATED 2"2	
11	0303761	FITTING, ELBOW 6MJ-6MB90L	1
12	0303994	HOSE ASSY- 22"	1
13	0307106	FITT, CONNECTOR 4MB-6FB	1
14	0307651	PLANETARY DRIVE W/ BRAKE 105E	1
15	0311640	HOSE ASSY - 12"LG	2
16	0400070	SCREW, 1/4-20X1 HHC GR5	2
17	0400081	SCREW, 1/4-20X3-1/2 HHC GR5	4
18	0400122	SCREW, 3/8-16X1-1/4 HHC GR5	2
19	0400177	SCREW, 1/2-13X1-1/4 HHC GR5	3
20	0400237	SCREW, 1/2-13X4 HHC GR5	3
21	0400408	NUT, 1/2-13 LOK	4
22	0400431	NUT, 3/4-10 LOK GR8	4
23	0400451	WASHER, 1/4	2
24	0400452	LKWASHER, 1/4	6
25	0400491	LKWASHER, 1/2	2
26	0400762	SCREW, 3/4-10X3-3/4 FHS	4
27	07025173	SPACER, 600R LIFT CYL	2
28	07029839	PLATE, PROX SENSOR FLAG 600R	1
29	08015482	WRECKER FRAME WLMT - 600R	1
30	0910238	SWING LIMIT VALVE ASSY - 1140	1
31	28057005	PLATE - SWIVEL PLATE FRONT MTG	1
32	28057006	PLATE - SWIVEL PLATE SIDE MTG	2
33	28059003	HYDRAULIC SWIVEL ASSEMBLY	1
34	3116-700008	PIN, MAIN BOOM PIVOT	1
35	3116-700009	PIN, MAIN BOOM LOWER LIFT CYL	2
36	511-5000002	CYL, HYD - BOOM LIFT	2
37	512-080001	VALVE, SWING CONTROL	1
38	515-000101	HYDRAULIC MOTOR TC SERIES	1
39	HC1291	FITTING, 4MJ-4MB STR THR	1

09017889, WRECKER FRAME ASSY - 600R (cont'd)

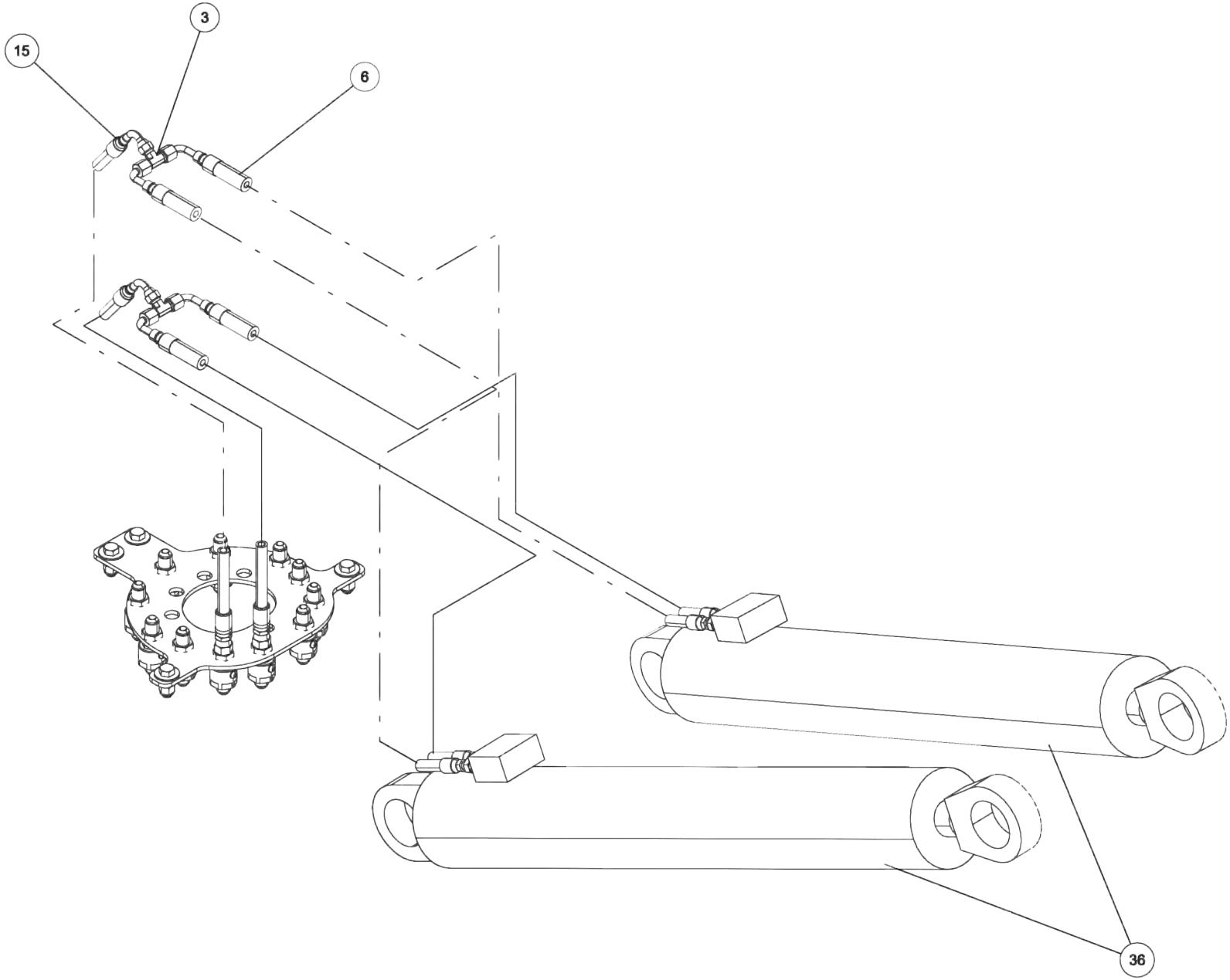

09017889, WRECKER FRAME ASSY - 600R (cont'd)

ITEM	PART NUMBER	DESCRIPTION	QTY
1	0300044	FITT, HYD CONN. 6MJ-8MB	2
2	0300787	HOSE HYD, 53" LG	2
3	0301377	FITTING, TEE,3/8" JIC	2
4	0301471	HOSE, 30" 8FJK-8M3K-8FJX90	1
5	0301522	ADAPTER, 6MJ-6MB	4
6	0301998	HOSE HYD, 24" LG	4
7	0302052	TEE, 8MJ-8FJX-8MJ RUN	2
8	0303036	8 FJ CAP	1
9	0303182	HOSE HYD, 41"	3
10	0303373	CLAMP INSULATED 2"2	
11	0303761	FITTING, ELBOW 6MJ-6MB90L	1
12	0303994	HOSE ASSY- 22"	1
13	0307106	FITT, CONNECTOR 4MB-6FB	1
14	0307651	PLANETARY DRIVE W/ BRAKE 105E	1
15	0311640	HOSE ASSY - 12"LG	2
16	0400070	SCREW, 1/4-20X1 HHC GR5	2
17	0400081	SCREW, 1/4-20X3-1/2 HHC GR5	4
18	0400122	SCREW, 3/8-16X1-1/4 HHC GR5	2
19	0400177	SCREW, 1/2-13X1-1/4 HHC GR5	3
20	0400237	SCREW, 1/2-13X4 HHC GR5	3
21	0400408	NUT, 1/2-13 LOK	4
22	0400431	NUT, 3/4-10 LOK GR8	4
23	0400451	WASHER, 1/4	2
24	0400452	LKWASHER, 1/4	6
25	0400491	LKWASHER, 1/2	2
26	0400762	SCREW, 3/4-10X3-3/4 FHS	4
27	07025173	SPACER, 600R LIFT CYL	2
28	07029839	PLATE, PROX SENSOR FLAG 600R	1
29	08015482	WRECKER FRAME WLMT - 600R	1
30	0910238	SWING LIMIT VALVE ASSY - 1140	1
31	28057005	PLATE - SWIVEL PLATE FRONT MTG	1
32	28057006	PLATE - SWIVEL PLATE SIDE MTG	2
33	28059003	HYDRAULIC SWIVEL ASSEMBLY	1
34	3116-700008	PIN, MAIN BOOM PIVOT	1
35	3116-700009	PIN, MAIN BOOM LOWER LIFT CYL	2
36	511-5000002	CYL, HYD - BOOM LIFT	2
37	512-080001	VALVE, SWING CONTROL	1
38	515-000101	HYDRAULIC MOTOR TC SERIES	1
39	HC1291	FITTING, 4MJ-4MB STR THR	1

0910238, SWING LIMIT VALVE ASSEMBLY

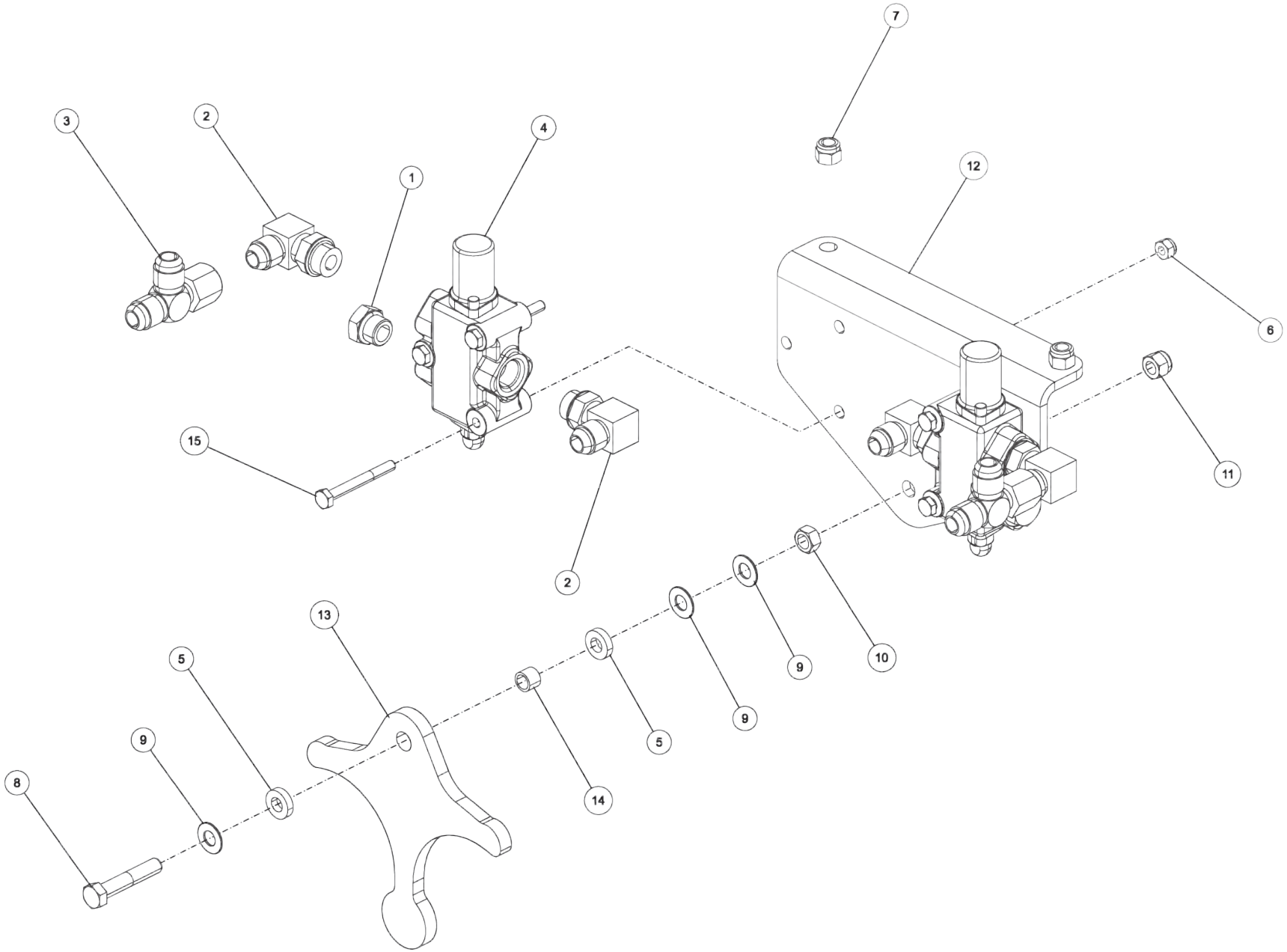

0910238, SWING LIMIT VALVE ASSEMBLY (cont'd)

ITEM	PART NUMBER	DESCRIPTION	QTY
1	0300387	PLUG, 8MB	2
2	0301388	ELBOW, 8MJ-8MB90	4
3	0302052	TEE, 8MJ-8FJX-8MJ RUN	2
4	0310336	VALVE, DIVERTER	2
5	0310565	SPACER, 3/8ID X 3/4OD X 3/16	2
6	0400367	NUT, 1/4-20 LOK	6
7	0400392	NUT, 3/8-16 LOK	2
8	0402046	SCREW, 3/8-16X2 HHC SS	1
9	0402120	WASHER, 3/8 SS	3
10	0402122	NUT, 3/8-16 HEX SS	1
11	0402123	NUT, 3/8-16 LOK SS	1
12	07000402	ANGLE - SWING LIMIT MOUNTING	1
13	0721687	PLATE - SWING LIMIT CAM	1
14	561-0380002	BEARING, BRONZE 3/8 IDx1/2 OD	1
15	9041010	1/4 NC X 2 1/4 HHCS GR8	6

28059003, HYDRAULIC SWIVEL ASSEMBLY

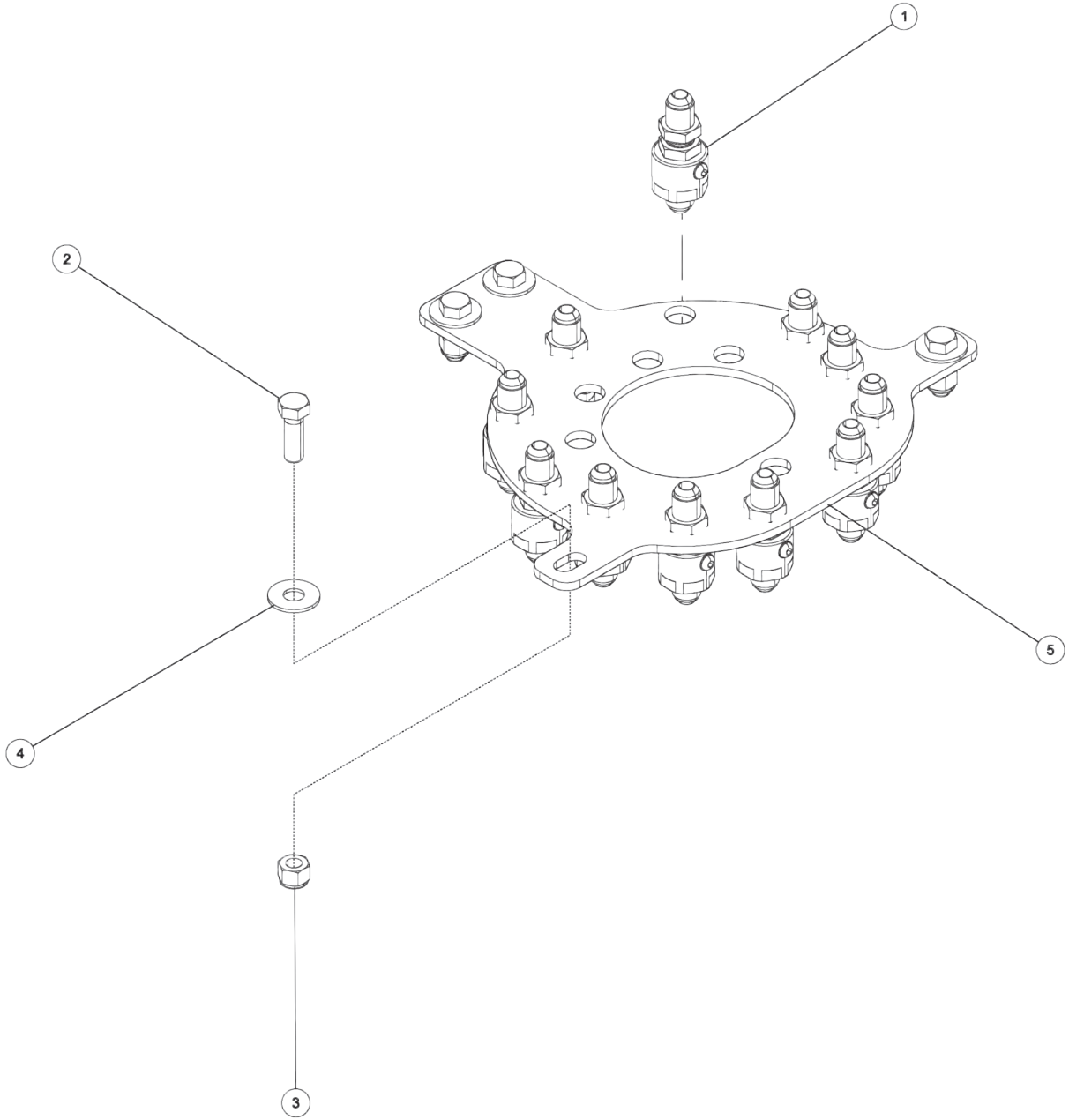

28059003, HYDRAULIC SWIVEL ASSEMBLY (cont'd)

ITEM	PART NUMBER	DESCRIPTION	QTY
1	0310371	SWIVEL, INLINE - 8MJ BULKHEAD	11
2	0400181	SCREW, 1/2-13X1-1/2 HHC GR5	4
3	0400408	NUT, 1/2-13 LOK	4
4	0400492	USS FLAT WASHER, 1/2	4
5	0724503	PLATE-HYD SWIVEL MTG	1

0910320, CROSSTUBE, LH PIVOT ASSY - FABR

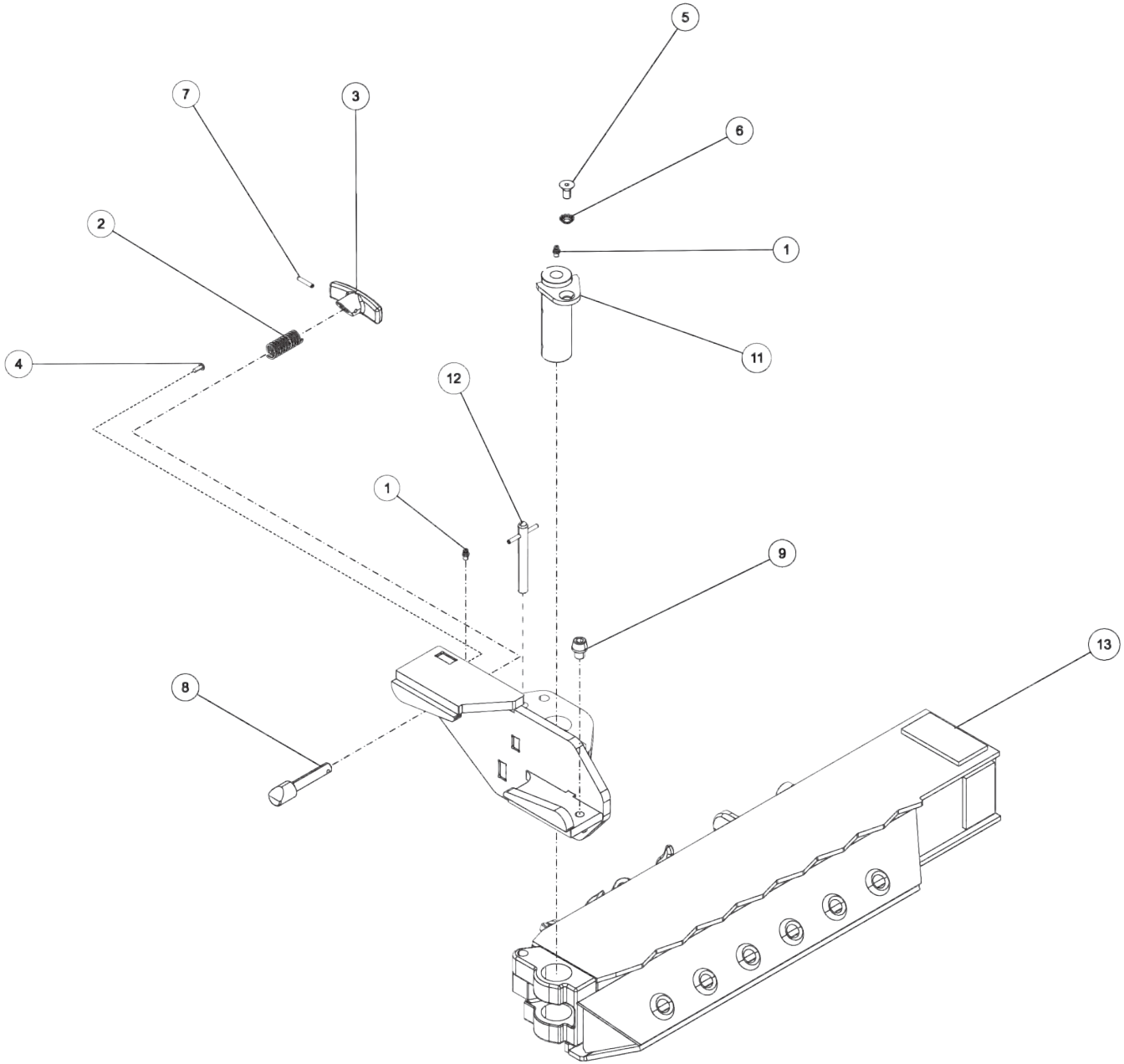

0910320, CROSSTUBE, LH PIVOT ASSY - FABR (cont'd)

ITEM	PART NUMBER	DESCRIPTION	QTY
1	0300113	GREASE FITTING, 1/4-28 STR	2
2	0302641	SPRING - PLUNGER PIN	1
3	0302648	T HANDLE	1
4	0400044	SCREW, 10X1/2 DRV	2
5	0400349	SCREW, 3/8-16X3/4 FHS BO	1
6	0400483	LKWASHER, 3/8 CET	1
7	0400559	PIN, 3/16X1 SPR	1
8	0707505	PIN, PLUNGER	1
9	0712933	PIN, ALIGNMENT	1
10	0807485	ENDPLATE, LH PIVOT -FABRICATED	1
11	0807504	PIVOT SHAFT	1
12	0904744	PIN ASSEMBLY	1
13	3014-860600	CROSSTUBE,LH - OUTER - CENTURY	1

0910321, CROSSTUBE, RH PIVOT ASSY - FABR

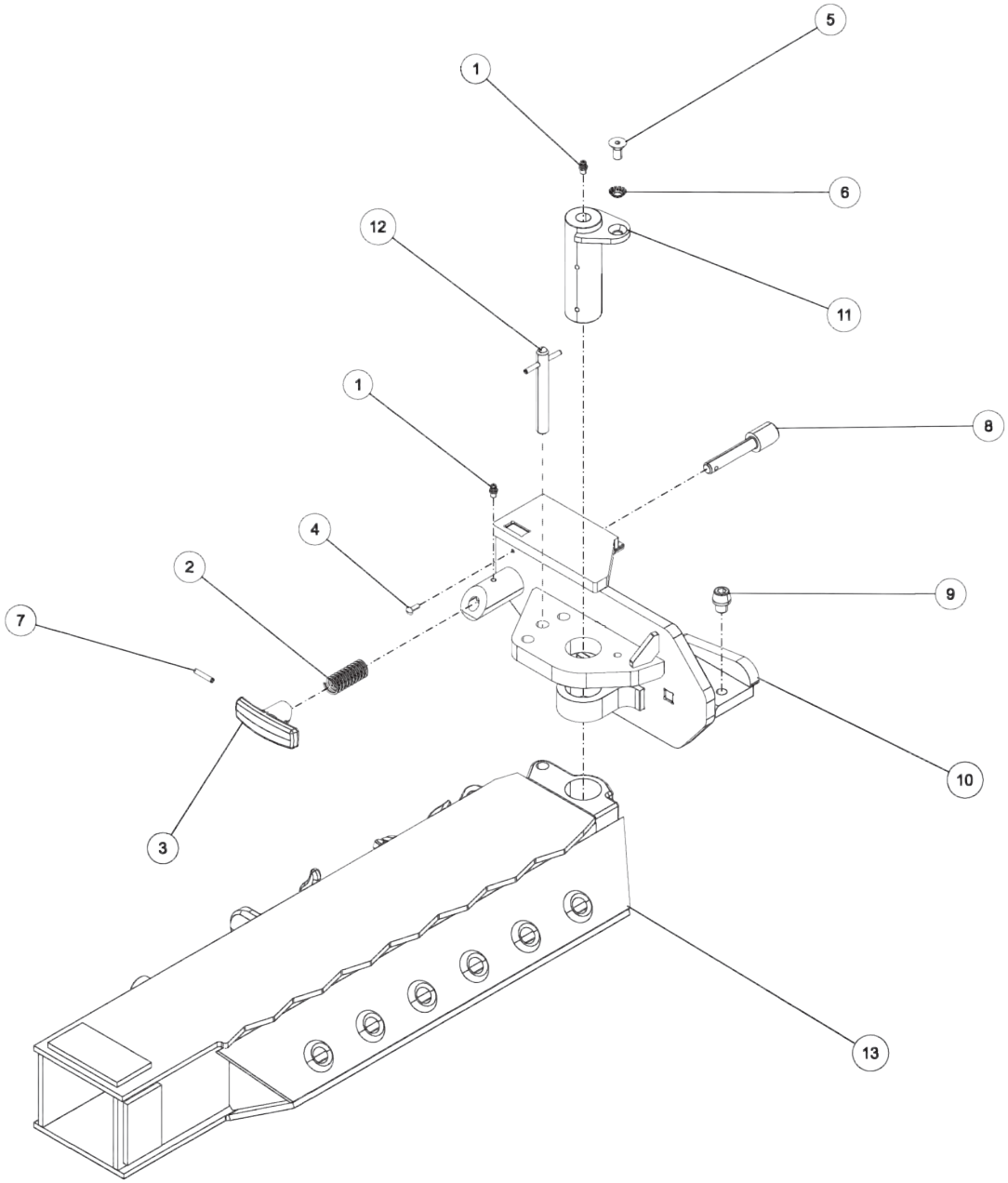

0910321, CROSSTUBE, RH PIVOT ASSY - FABR (cont'd)

ITEM	PART NUMBER	DESCRIPTION	QTY
1	0300113	GREASE FITTING, 1/4-28 STR	2
2	0302641	SPRING - PLUNGER PIN	1
3	0302648	T HANDLE	1
4	0400044	SCREW, 10X1/2 DRV	2
5	0400349	SCREW, 3/8-16X3/4 FHS BO	1
6	0400483	LKWASHER, 3/8 CET	1
7	0400559	PIN, 3/16X1 SPR	1
8	0707505	PIN, PLUNGER	1
9	0712933	PIN, ALIGNMENT	1
10	0807486	ENDPLATE, RH PIVOT -FABRICATED	1
11	0807504	PIVOT SHAFT	1
12	0904744	PIN ASSEMBLY	1
13	3014-860700	CROSSTUBE,RH - OUTER - CENTURY	1

3014-960000, CROSSBAR ASSEMBLY

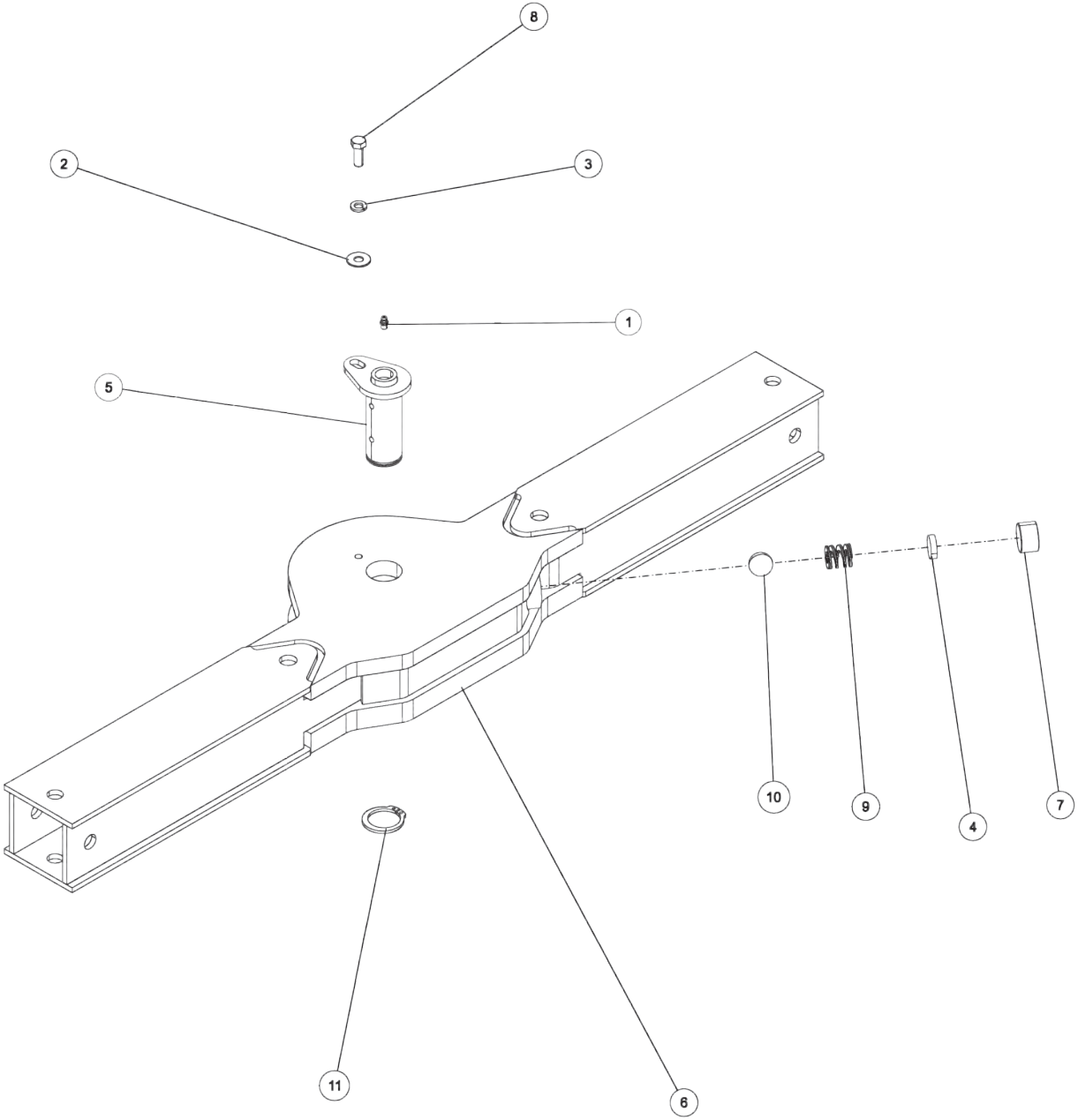

3014-960000, CROSSBAR ASSEMBLY (cont'd)

ITEM	PART NUMBER	DESCRIPTION	QTY
1	0300113	GREASE FITTING, 1/4-28 STR	1
2	0400480	WASHER, 3/8	1
3	0400482	LKWASHER, 3/8	1
4	3014-796005	SPACER - XBAR DIE SPRING	1
5	3014-801100	PIN - CROSSBAR WELDMENT	1
6	3014-860000	CROSSBAR - FABRICATED	1
7	9012944	1 NPT SOC HD PIPE PLUG *	1
8	9041205	3/8 X 1 HHCS PL GR8	1
9	9047057	DIE SPRING- MHP-42(DANLY	1
10	9052013	1” BALL CHROME	1
11	9056150	RETAINING RING - 1 1/2	1

09019353, 600R CONTROL PANEL KIT, 30.5" RH

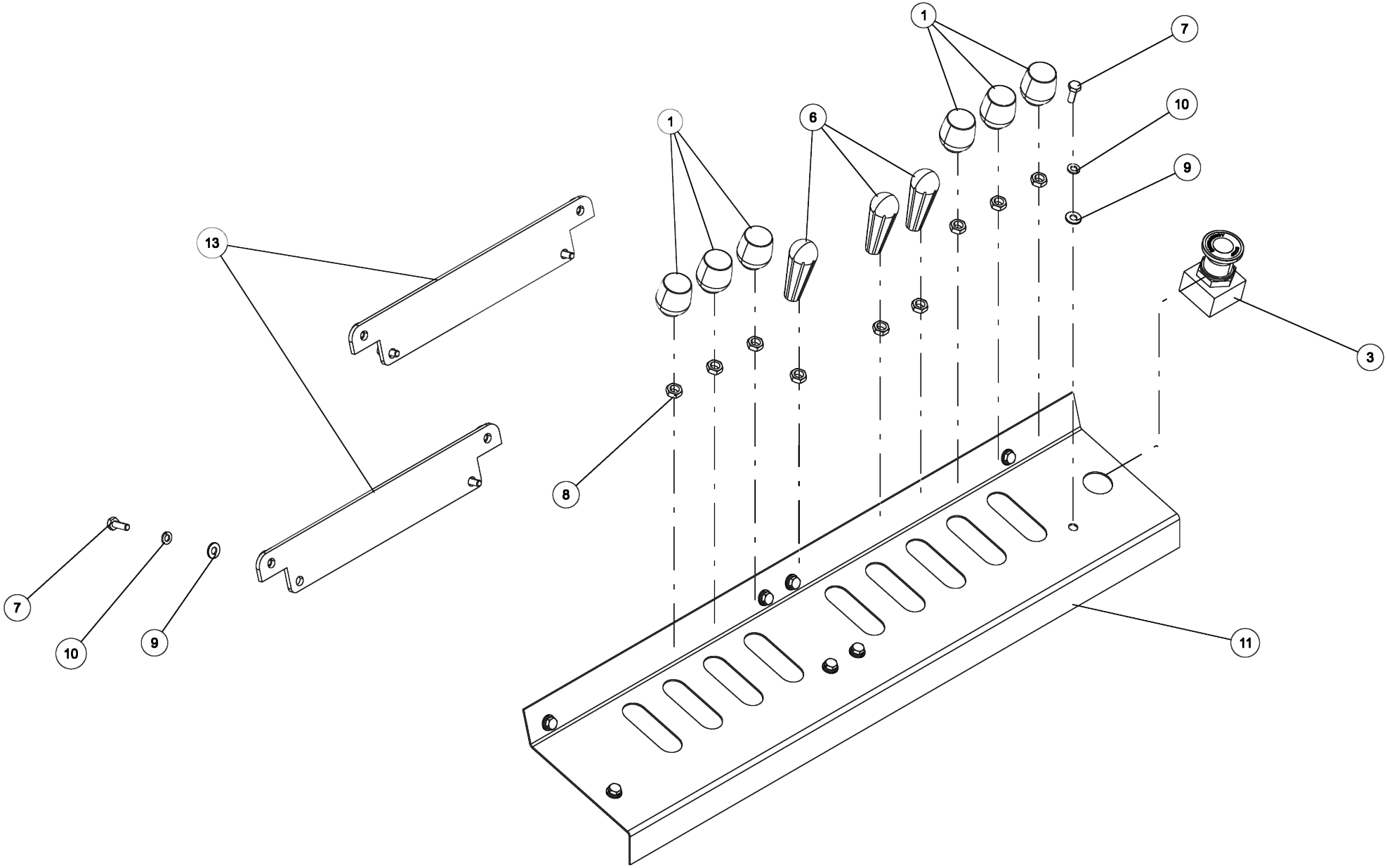

09019353, 600R CONTROL PANEL KIT, 30.5" RH (cont'd)

ITEM	PART NUMBER	DESCRIPTION	QTY
1	0300341	KNOB, BLACK (BLANK)	6
2	0302205	GAUGE, FLUSH MNTG-6000 PSI	2
3	0306537	EMERGENCY SWITCH(RAMSEY)	1
4	0306540	ROTARY SELECT SWITCH OPERATOR	6
5	0307166	PLUG 7/8	2
6	0307604	KNOB, RED LONG - SK0700-07	3
7	0400066	SCREW, 1/4-20X3/4 HHC GR5	12
8	0400393	NUT, 3/8-16 JAM	9
9	0400451	WASHER, 1/4	12
10	0400452	LKWASHER, 1/4	12
11	07026129	RH LOWER CNTRL PNL, 30.5 WIDE	1
12	07026130	RH UPPER CNTRL PNL, 30.5 WIDE	1
13	0807540	CONTROL BAR WLMT 5 HANDLE	2
14	9024041	SWITCH-ROCKER, LIGHTED 12V	3

09019353, 600R CONTROL PANEL KIT, 30.5" RH (cont'd)

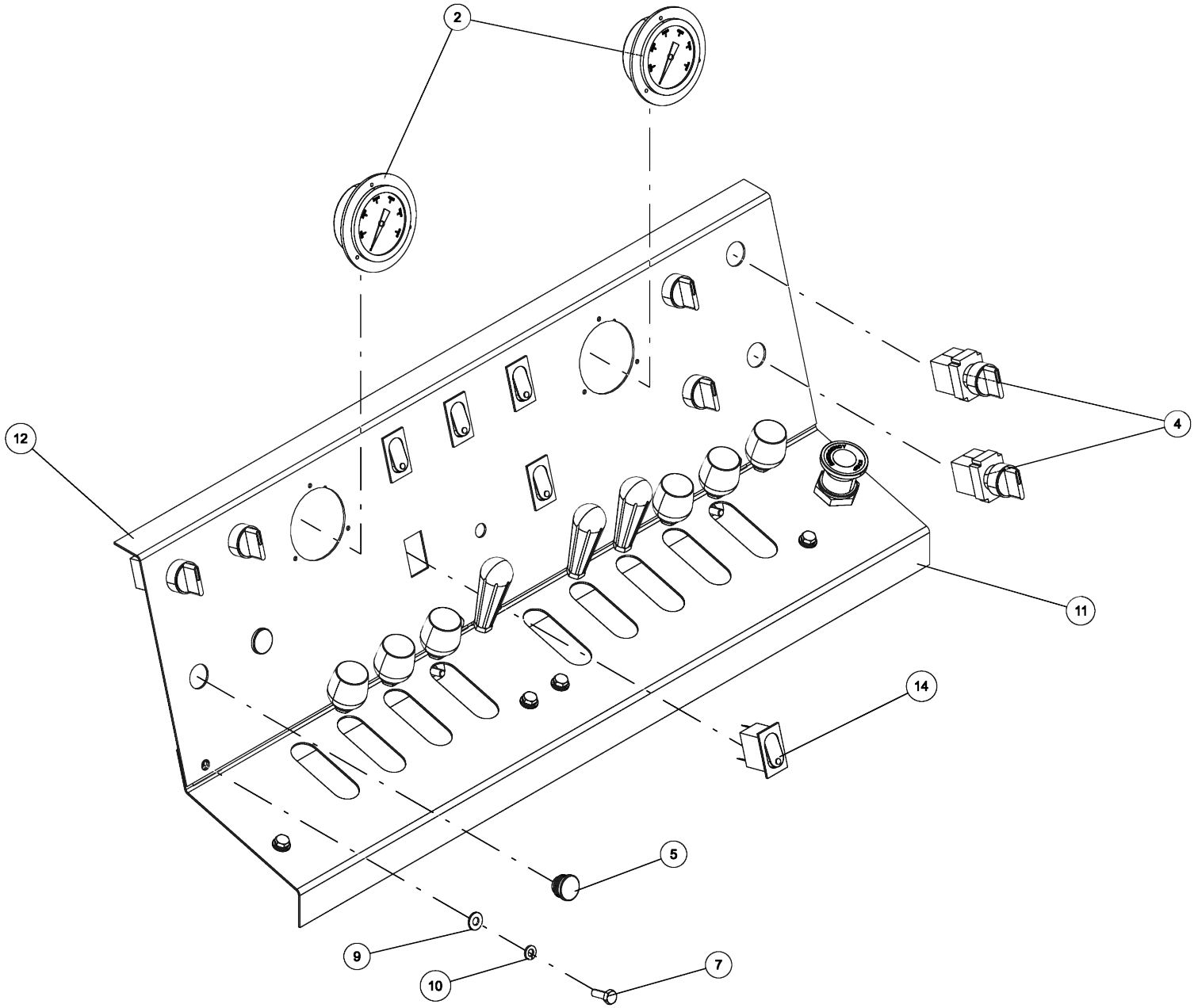

09019353, 600R CONTROL PANEL KIT, 30.5" RH (cont'd)

ITEM	PART NUMBER	DESCRIPTION	QTY
1	0300341	KNOB, BLACK (BLANK)	6
2	0302205	GAUGE, FLUSH MNTG-6000 PSI	2
3	0306537	EMERGENCY SWITCH(RAMSEY)	1
4	0306540	ROTARY SELECT SWITCH OPERATOR	6
5	0307166	PLUG 7/8	2
6	0307604	KNOB, RED LONG - SK0700-07	3
7	0400066	SCREW, 1/4-20X3/4 HHC GR5	12
8	0400393	NUT, 3/8-16 JAM	9
9	0400451	WASHER, 1/4	12
10	0400452	LKWASHER, 1/4	12
11	07026129	RH LOWER CNTRL PNL, 30.5 WIDE	1
12	07026130	RH UPPER CNTRL PNL, 30.5 WIDE	1
13	0807540	CONTROL BAR WLMT 5 HANDLE	2
14	9024041	SWITCH-ROCKER, LIGHTED 12V	3

0910535, MANIFOLD PKG 16 VLV 12VDC W/O HNS

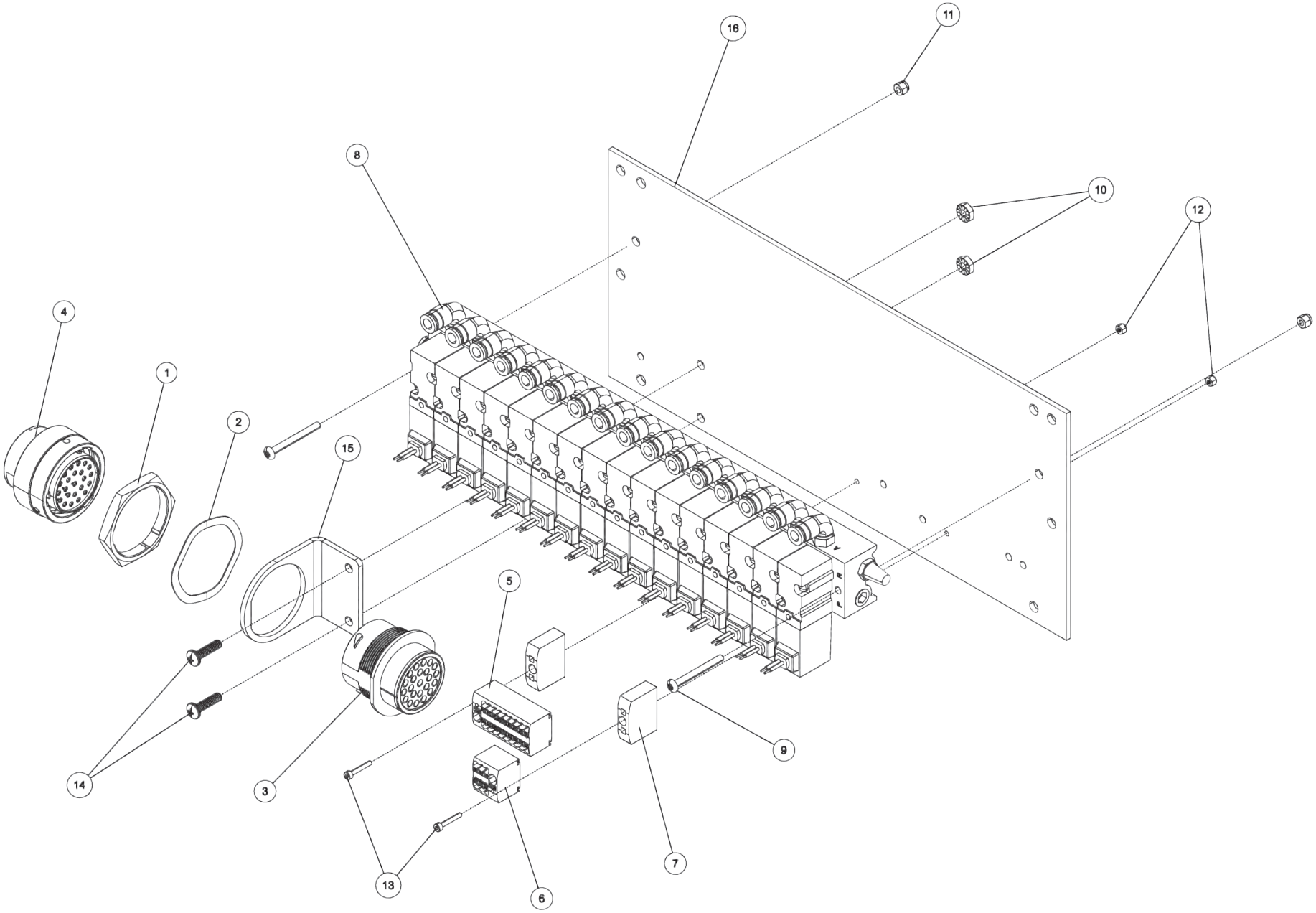

0910535, MANIFOLD PKG 16 VLV 12VDC W/O HNS (cont'd)

ITEM	PART NUMBER	DESCRIPTION	QTY
1	03002200	PNUT HDP20 24, 2411-001-2405	1
2	03002201	LKWR HDP20 24, 2414-001-2486	1
3	03015444	CONN HDP20, HDP24-24-23PE	1
4	03015445	CONN HDP20, HDP26-24-23SE	1
5	03015481	DIST BLOCK, 18+1 BK, 1047436	1
6	03015482	DIST BLOCK, 6+1 RED, 1047480	1
7	03015483	FLANGE, PTFIX-F, 3274060	2
8	0311596	AIR BANK-16 POS 12V	1
9	0400009	SCREW, 8-32X1-1/2 PRH SS	2
10	04000361	10-24 SS KEP NUT	2
11	0400352	NUT, 8-32 LOK	2
12	04003628	NUT, LOK, M2.5 985-A2	2
13	04003629	SCREW, SHC, M2.5 X 16MM, A-2	2
14	0400687	SCREW, 10-24X3/4 PRH SS	2
15	07018065	BRACKET, HDP20 90 DEG. D	1
16	0725047	PLATE-AIR BANK BACKING	1

0911804, AIR REGULATOR-GAUGE ASSEMBLY

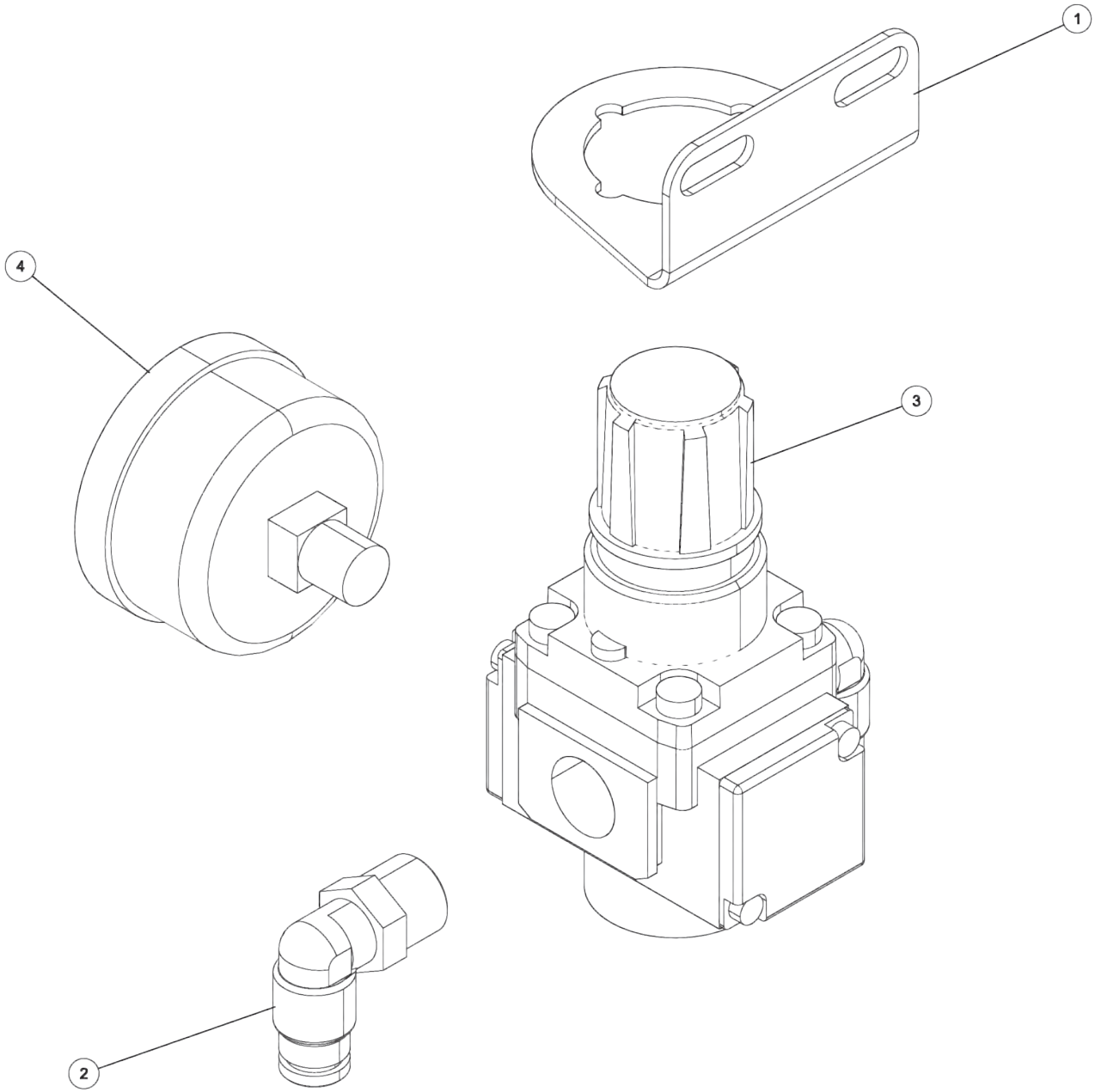

0911804, AIR REGULATOR-GAUGE ASSEMBLY (cont'd)

ITEM	PART NUMBER	DESCRIPTION	QTY
1	0303365	BRACKET, MOUNTING - AIR PREP	1
2	9010520	FITTING-ELBOW 1/4T-1/4NPT	2
3	HA0131	REGULATOR , AIR	1
4	HA0132	GAUGE 0-160 PSI	1

NOTES

NOTES

Miller Industries Towing Equipment Inc.
8503 Hilltop Drive • Ooltewah, Tennessee 37363
(423) 238-4171 • www.millerind.com