OWNER'S MANUAL

1135 KNEEBOOM ROTATOR

PARTS

NOTE: MANUAL including SPECIFICATIONS subject to change without notice.
All ratings specified are based on structural factors only, not vehicle capacities or capabilities.

Miller Industries Towing Equipment Inc.
8503 Hilltop Drive
Ooltewah, Tennessee 37363
Phone (423) 238-4171 • FAX (423) 238-5371

FORM NO. 05003683
MARCH 2021
Price $25.00

LIMITED WARRANTY

MILLER INDUSTRIES TOWING EQUIPMENT INC., hereinafter referred to as MILLER, warrants to the original purchaser that each new MILLER wrecker or other MILLER products will be free from defects in material and workmanship for a period of twelve (12) months from date placed in service, but in no event shall such warranty period exceed twenty-four (24) months from date of manufacture by MILLER. The purchaser must promptly notify MILLER in writing of any failure in material or workmanship. In no event shall MILLER accept such notification later than twenty-four (24) months from date of delivery or twelve (12) months from date placed in service, whichever is earlier.

MILLER's obligation under this warranty, statutory or otherwise, is limited to the repair or replacement at the MILLER factory, or at a point designated by MILLER, of such part or parts as shall appear upon inspection by MILLER to be defective in material or workmanship. New or remanufactured parts will be used for any replacement at MILLER's option. This warranty is not transferable. This warranty does not obligate MILLER to bear the cost of labor or transportation charges in connection with the repair or replacement of any parts found to be defective, nor shall it apply to a product upon which repairs or alterations have been made unless authorized by MILLER.

EXCEPT AS EXPRESSLY SET FORTH IN THIS WARRANTY, MILLER MAKES NO OTHER WARRANTY, EXPRESS OR IMPLIED, AND HEREBY DISCLAIMS ALL OTHER WARRANTIES INCLUDING, BUT NOT LIMITED TO, THE IMPLIED WARRANTIES OF MERCHANTABILITY AND FITNESS FOR A PARTICULAR PURPOSE. MILLER shall in no event be liable for claimed downtime, claimed loss of profits or goodwill, or any other special, incidental, indirect, or consequential damages concerning or relating to any product or parts, whether based on negligence, strict liability, breach of contract, breach of warranty, misrepresentation or any other legal theory, regardless of whether the loss resulted from any general or particular requirement which MILLER knew or had reason to know about at the time of sale.

MILLER MAKES NO WARRANTY, EXPRESS OR IMPLIED, AS TO THE FINISHED PRODUCTS MANUFACTURED OR SUPPLIED BY ANOTHER MANUFACTURER AND SUPPLIED BY MILLER TO PURCHASER, including, but not limited to, any vehicle to which a MILLER product may be affixed or any accessories or wire rope, and MILLER EXPRESSLY DISCLAIMS ANY IMPLIED WARRANTIES OF MERCHANTABILITY OR FITNESS FOR A PARTICULAR PURPOSE AS TO SUCH EQUIPMENT OR PRODUCTS. This language shall in no way affect or diminish the rights of the purchaser to rely on such warranties as are extended by such manufacturers or suppliers. MILLER shall, to the extent permitted under applicable law, pass on to the purchaser such manufacturer's or seller's warranty.

MILLER, whose policy is one of continuous improvement, reserves the right to improve its products through changes in design or materials as it may deem desirable without being obligated to incorporate such changes in products previously sold. This warranty is not intended to cover or include the following items, which are set forth by way of example and not limitation:

A. Normal deterioration of trim, paint, lettering, and appearance items due to wear or exposure to weather, road conditions, road treatments, etc.
B. Any damage or defect due to accident, misuse, abuse, improper or unauthorized repairs, failure to provide reasonable and necessary maintenance, or uses for which the equipment was not designed or intended.
C. Alterations or modifications that affect performance, operation or reliability.
D. Normal maintenance parts including, but not limited to, wear pads, bushings, wire rope, mud flaps, fenderettes, light bulbs, hydraulic oil, filters, and tow sling belts.

IT IS EXPRESSLY UNDERSTOOD THAT MILLER MAKES NO IMPLIED WARRANTY THAT MILLER PRODUCTS SHALL BE FIT FOR THE PURPOSE OF LIFTING OR MOVING PEOPLE OR FOR ANY OTHER IMPROPER USE.

Miller Industries Towing Equipment Inc.
8503 Hilltop Drive
Ooltewah, Tennessee 37363
Telephone (423) 238-4171

SERIAL NUMBER

OWNER, USER AND OPERATOR:

We appreciate your choice of our towing and recovery unit for your application. Our number one priority is user safety which is best achieved by our joint efforts. We feel that you can make a major contribution to safety if you, as the equipment owner and operator:

1. **Comply with Federal, State, and Local Regulations.**
2. **Read, Understand, and Follow the Instructions in this Manual.**
3. **Use Good, Safe Work Practices in a Common Sense Way.**
4. **Only have Authorized and Trained Personnel performing maintenance on the Towing and Recovery Unit.**

© 2021 MILLER INDUSTRIES TOWING EQUIPMENT INC. All rights reserved. Reproduction or use, without express permission, of editorial or pictorial content, in any manner, is prohibited.

TABLE OF CONTENTS

It is assumed by the manufacturer that the Owner/Operator has a thorough knowledge of the accepted and lawful retrieval and towing methods as dictated by his city, county or state. The manufacturer rejects any liability claim that may result from the incorrect or unlawful application of its equipment.

Section I - PARTS

09003709, 1135 KB BASIC UNIT ASSEMBLY . . . . . I-2 thru I-53

09000097, ILLUMINATED LEGEND ASSEMBLY LH UPPER. . . . . I-54 thru I-55

09000135, ILLUMINATED LEGEND ASSEMBLY RH UPPER . . . . . I-56 thru I-57

09000139, ILLUMINATED LEGEND ASSEMBLY . . . . . I-58 thru I-59

09002243, VALVE ASSEMBLY, 1150 KNEE MAIN . . . . . I-60 thru I-61

09002244, VALVE ASSEMBLY, 1150 KNEE UNDERLIFT. . . . . I-62 thru I-63

09002246, VALVE ASSEMBLY, PRESSURE REDUCING . . . . . I-64 thru I-65

09002247, CONTROL ASSEMBLY, 11 HANDLE WV . . . . . I-66 thru I-67

09002910, PUMP KIT, 4K KNEE BOOM . . . . . I-68 thru I-69

09002949, ILLUMINATED LEGEND ASSEMBLY LH . . . . . I-70 thru I-71

09002950, ILLUMINATED LEGEND ASSEMBLY . . . . . I-72 thru I-73

0908745, ILLUMINATED LEGEND ASSEMBLY . . . . . I-74 thru I-75

09003710, SUBFRAME ASSEMBLY, 1135 KNEE BOOM. . . . . I-76 thru I-87

0910260, FRONT OUTRIGGER INSTALLATION . . . . . I-88 thru I-89

0910430, HOUSE LOCK ASSEMBLY . . . . . I-90 thru I-91

0910575, FRONT OUTRIGGER VERTICAL ASSEMBLY . . . . . I-92 thru I-93

0911857, HYDRAULIC TANK ASSEMBLY . . . . . I-94 thru I-95

TABLE OF CONTENTS

Section I - PARTS (cont'd)

09003733, WRECKER FRAME ASSEMBLY . . . . . I-96 thru I-107

0910238, SWING LIMIT VALVE ASSEMBLY . . . . . I-108 thru I-109

0911199, HYDRAULIC SWIVEL PLATE ASSEMBLY . . . . . I-110 thru I-111

0911335, 12V AIR SYSTEM ASSEMBLY . . . . . I-112 thru I-113

0911804, AIR REGULATOR-GAUGE ASSEMBLY . . . . . I-114 thru I-115

09003870, WINCH ASSEMBLY 1135 35K. . . . . I-116 thru I-117

09004266, UNDERLIFT BOOM ASSEMBLY . . . . . I-118 thru I-123

09003929, UNDERLIFT HORIZONTAL BOOM ASSEMBLY . . . . . I-124 thru I-133

0908282, INNER BOOM ASSEMBLY . . . . . I-134 thru I-135

0910188, 2-STAGE FRONT OUTRIGGER ASSEMBLY . . . . . I-136 thru I-141

0910246, 3-STAGE REAR OUTRIGGER ASSEMBLY . . . . . I-142 thru I-143

0910571, LH 3-STAGE REAR OUTRIGGER ASSEMBLY . . . . . I-144 thru I-153

0910572, RH 3-STAGE REAR OUTRIGGER ASSEMBLY . . . . . I-154 thru I-163

0911167, SPADE ASSEMBLY . . . . . I-164 thru I-165

0910615, OUTRIGGER CONTROL VALVE KIT . . . . . I-166 thru I-167

0910616, OUTRIGGER CONTROL VALVE KIT . . . . . I-168 thru I-169

0910635, OUTRIGGER BLEED VALVE ASSEMBLY . . . . . I-170 thru I-171

0910915, FRONT VALVE MOUNTING . . . . . I-172 thru I-173

0910935, CROSSBAR XHD 5X5 ASSEMBLY . . . . . I-174 thru I-175

TABLE OF CONTENTS

Section I - PARTS (cont'd)

0911237, ILLUMINATED LEGEND RH LOWER ASSEMBLY . . . . . I-176 thru I-177

09000120, ILLUMINATED LEGEND ASSEMBLY . . . . . I-178 thru I-179

09000142, ILLUMINATED LEGEND ASSEMBLY . . . . . I-180 thru I-181

0911324, RIGHT HAND CONTROL STATION ASSEMBLY . . . . . I-182 thru I-185

0911957, D-RING KIT . . . . . I-186 thru I-187

0912071, 1135 MAIN BOOM ASSEMBLY . . . . . I-188 thru I-190

0906532, SWIVEL, BOOM ASSEMBLY . . . . . I-192 thru I-193

124004464, SWIVEL, BOOM ASSEMBLY . . . . . I-194 thru I-195

Section I - PARTS

REF. 05003683

This Section is provided by the manufacturer for the purpose of ordering any component part of the **1135 Kneeboom Rotator** that may be required when part replacement is necessary. Be certain to use only original equipment replacement parts for warranty purposes as well as for keeping your unit in its original state and optimum operating capacities.

When ordering replacement or spare parts be sure to provide the following information to the manufacturer's **Parts Department**.

1. **Manual Number & Date of Publication**
2. **Manual Page Number**
3. **Page Title**
4. **Reference Number of Part Desired**
5. **Part Number**
6. **Part Description**
7. **Quantity of Part Desired**
8. **Unit Serial Number**

Providing this information will help ensure that the correct parts will be delivered to you in an expedient manner without delay. Should additional information be required for repair or replacement of certain components, contact your Wrecker Manufacturer Authorized Representative.

The Manufacturer reserves the right, without notice or obligation, to improve or modify their products, which may change the specifications, models and feature availability.

09003709, BASIC UNIT ASSEMBLY, 1135 KNEE BOOM

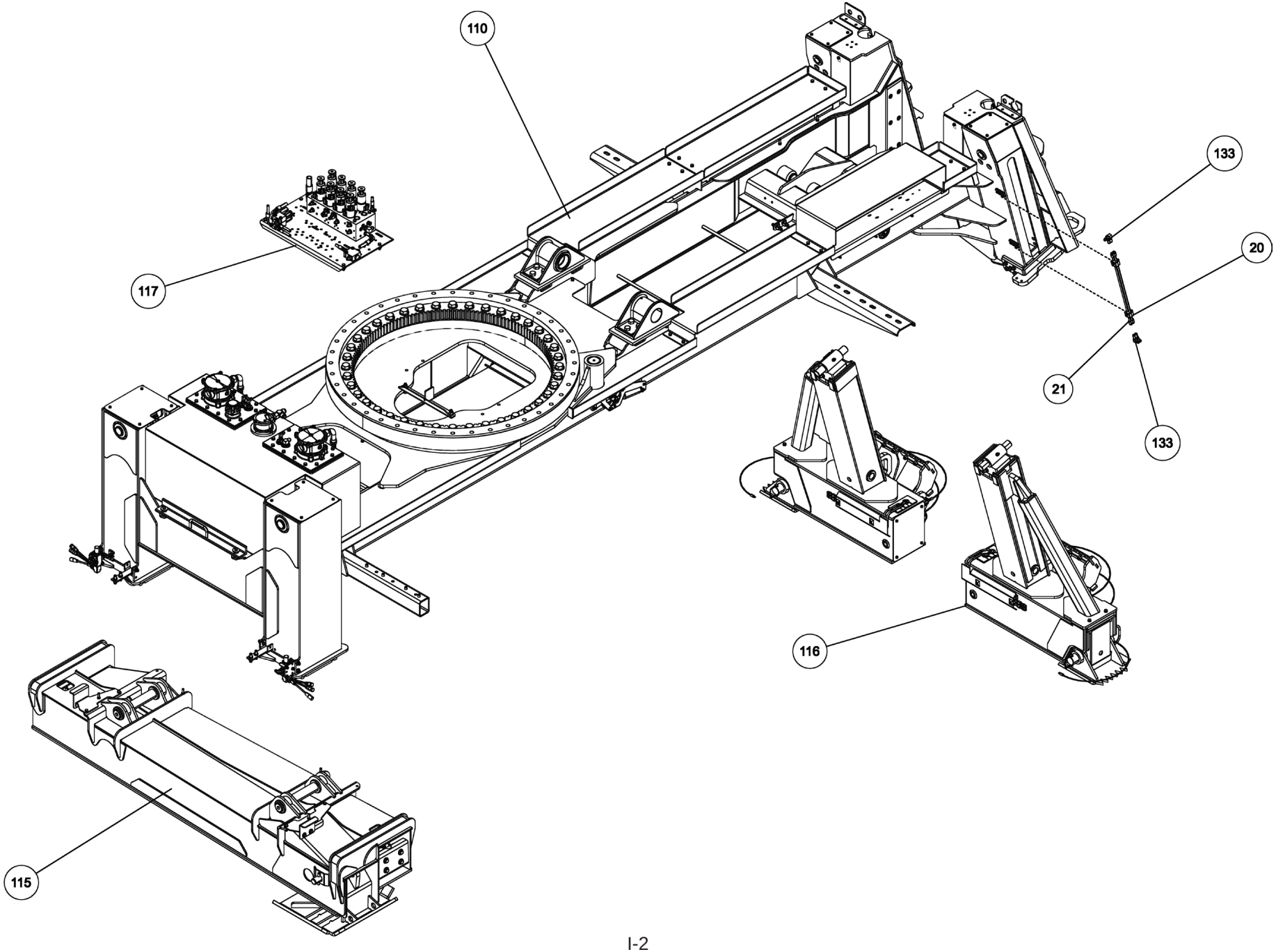

09003709, BASIC UNIT ASSEMBLY, 1135 KNEE BOOM

ITEM	PART NUMBER	DESCRIPTION	QTY
	09003709	BUA, 1135 KNEE BOOM	-
1	0300113	GREASE FITTING, 1/4-28 STR	1
2	03003419	HOSE, HYD 132" LG	1
3	03003420	HOSE, HYD 60" LG	1
4	03003421	HOSE, HYD 18"LG	4
5	03003424	HOSE, HYD 138"	1
6	03003425	HOSE, HYD 90" LG	4
7	03003426	HOSE, HYD 45" LG	6
8	0300364	CLAMP-HOSE,0.875"-2.75" 50"LBS	2
9	0300434	FITTING, HOSE BARB, 2	1
10	0300558	HOSE, SUCTION 2"ID 100R4 (C4)	1
11	0300835	KNOB-BOOM (UP-DOWN)	1
12	0300837	KNOB-BOOM (IN-OUT)	1
13	0300865	FITTING, CONNECTOR 8MJ-8MJ	1
14	0301113	HOSE HYD, 82"	2
15	0301377	FITTING, TEE,3/8" JIC	1
16	0301470	FITTING, 90ELB 6MJ-8MB90	3
17	0301473	HOSE HYD, 18" LG	1
18	0301522	ADAPTER, 6MJ-6MB	1
19	0301529	HOSE HYD, 58	2
20	03015922	STAUFF CLAMP, 3/8 TWIN	4
21	03016142	TUBE, HYD ASSY SF TO O/R	4
22	0301695	HOSE HYD, 91"	1
23	0301909	RECEPTACLE BOOT	1
24	0301946	FITTING, BLKHD CONNECT	3
25	0301947	FITTING, 45 DEG ADAPTER	1
26	0301948	HD 7 WAY TRAILER CONNECT	1
27	0301961	BALL VALVE 2	1
28	0302056	HOSE HYD, 183"	5
29	0302205	GAUGE, FLUSH MNTG-6000 PSI	2
30	0302367	PIPE NIPPLE - 2 X 4	1
31	0302372	HOSE HYD, 240" LG	4
32	0302534	FITTING, 45 DEG ELBOW	2
33	0302604	HOSE HYD, 44"	2
34	0302632	HOSE HYD, 40"	4
35	0302805	HOSE HYD, 10"	1
36	0302813	HOSE HYD, 108" LG	1
37	0302856	KNOB-TILT, 3/8-16 THREAD	1
38	0302881	HOSE HYD, 45"	1
39	0303170	HOSE, HYD. 75"	3
40	0303185	HOSE HYD, 66" LG.	4
41	0303188	HOSE HYD, 75" LG	1
42	0303339	HOSE HYD, 45" LG	1
43	0303340	HOSE HYD, 50" LG	1
44	0303379	KNOB, SWING CW - CCW	1
45	0303380	KNOB-UNDERLIFT (IN-OUT)	1

ITEM	PART NUMBER	DESCRIPTION	QTY
46	0303381	KNOB - UNDERLIFT (UP-DN)	1
47	0303391	HOSE 8AT2(8FJX-8FJ90) 110"	1
48	0303538	FITT, ADAPTER -BRASS 8FP-6MP	1
49	0303539	QUICK DISCONNECT 3/8 FPT	1
50	0304363	QUICK DISCONNECT 1/2 FPT	2
51	0306537	EMERGENCY SWITCH(RAMSEY)	2
52	0306540	ROTARY SELECT SWITCH OPER	1
53	0306921	PIPE PLUG, 2" SQ HD	1
54	0307052	WASHER, RUBBER 7/16X1 1/4X1/4	2
55	0307151	RUBBER FENDER	3
56	0307472	HOSE, HYD ASSY 24" LG	1
57	0307604	KNOB, RED LONG - SK0700-07	3
58	0310406	VALVE, SHUTTLE LS10-30-8T-N	1
59	0310456	PUSH BUTTN OPER W/MTG N/C	2
60	0310581	HOSE ASSY- 96" 8 fjx-10fjx90	4
61	0310956	TOOLBOX LH AL ROT TRI 2010 W/	1
62	0310957	TOOLBOX RH AL ROT TRI 2010 W/	1
63	0311191	ROLLER, POLY, 4" X 5/8"	2
64	0311417	HOSE, 196" 3/8 2 X STRAIGHT	2
65	0311426	HOSE ASSY, 80" 4FJX-4FJX45	1
66	0311500	LIGHT 6"OVAL REVERSE LED	2
67	0311502	LIGHT 6"OVAL CLEAR-AMBER LED	4
68	0311503	GROMMET, LIGHT 6" OVAL	1
69	0311514	LIGHT 2.5" CLEAR LENS-RED LED	2
70	0311516	GROMMET, LIGHT 2.5" ROUND	2
71	0312309	LIGHT 6" OVAL GLO-LT STT CLR/R	4
72	0313129	HOSE, 1 SUCTION 16C4	3
73	0400005	SCREW, 6-32X1/2 PRH SS	6
74	04000381	SS BHSCS 1/4-20 X 1	1
75	0400066	SCREW, 1/4-20X3/4 HHC GR5	2
76	0400078	SCREW, 1/4-20X2 HHC GR5	2
77	0400367	NUT, 1/4-20 LOK	2
78	0400379	NUT, 5/16-18 SPR J	1
79	0400451	WASHER, 1/4	2
80	0400452	LKWASHER, 1/4	2
81	0400454	WASHER, 1/4 SS	1
82	0400491	LKWASHER, 1/2	2
83	0400492	WASHER, 1/2	2
84	0400497	WASHER, 1/2 GR8	6
85	0400498	WASHER, 1/2X2X0.125	1
86	0400900	NUT, 1/2-13 LOK JAM	2
87	0402020	SCREW, 1/4-20X3/4 HHC SS	2
88	0402021	SCREW, 1/4-20X1 HHC SS	1
89	0402043	SCREW, 3/8-16X1-1/4 HHC SS	8
90	0402094	NUT, HEX 6-32 SS	6
91	0402111	LKWASHER, 1/4 SS	3

ITEM	PART NUMBER	DESCRIPTION	QTY
92	0402113	NUT, 1/4-20 LOK SS	2
93	0402114	NUT, 1/4-20 LOK REV SS	1
94	0402120	WASHER, 3/8 SS	8
95	0402123	NUT, 3/8-16 LOK SS	8
96	07005922	MOUNT-HYD GAUGE	1
97	0712230	BOSS, TURNTABLE LOCK	1
98	0806994	HOUSE LOCK INDICATOR WELD	1
99	0810433	HHU CHAIN ROLLER BRACKET, LH	1
100	0810434	HHU CHAIN ROLLER BRACKET, RH	1
101	09000097	ILLUMINATED LEGEND ASSY-LT UP	1
102	09000135	ILLUMINATED LEGEND ASSY-RT UP	1
103	09001440	50K DRAG WINCH ASSY	1
104	09002243	VALVE ASSY, 1150 KNEE MAIN	1
105	09002244	VALVE ASSY, 1150 KNEE BOOM U/L	1
106	09002246	VALVE ASSY, PRESSURE REDUC	1
107	09002247	CONTROL ASSY, 11 HANDLE WV	1
108	09002910	PUMP KIT, 4K KNEE BOOM	1
109	09002949	ILLUM LEGEND LT 1150 KNEE	1
110	09003710	SUBFRAME ASSY, 1135 KNEE	1
111	09003733	WRECKER FRAME ASSY 1135	1
112	09003870	WINCH ASSY 1135 W/ 35K WINCH	1
113	09004266	U/L BOOM ASSEMBLY (SHORT)	1
114	0908418	KIT-MUDFLAP CENTURY ROTATOR	1
115	0910188	2-STAGE FRONT OUTRIGGER ASY	1
116	0910246	3-STAGE REAR OUTRIGGER ASSY	1
117	0910615	OUTRIGGER CONT VALVE KIT	1
118	0910935	XBAR ASY HRDWR-XHD 5X5 CENT	1
119	0911237	ILLUM LEGEND ASSY RH LWR WLV	1
120	0911324	RH CTL STATION ASSY 5 WINCH W	1
121	0911957	KIT, D-RING PARTS	2
122	0912071	ASSY, 1135 BOOM	1
123	124004464	ALUM HEEL PLATE-14" SDU4&COA	1
124	24773017	HOSE ASSEMBLY 140"LG	2
125	24773018	HOSE ASSEMBLY 140"LG	2
126	9018016	HOSE CLAMP HS-20 1 1/4"	4
127	9024041	SWITCH-ROCKER, LIGHTED 12V	2
128	9041402	1/2 NC X 1 1/4 HHCS PLT GR8	6
129	9041403	1/2 NC X 1 1/2 HHCS PL GR8	1
130	9402970	TOOLBOX MTG. PAD	1
131	942480011	PLATE,SLOT-SS REAR WASHER	2
132	AWS-6821-A	HOSE ASSY-PRESSURE	8
133	FC41	FITTING-90DEG BLKHD ELB W/ NUT	8
134	HC1291	FITTING, 4MJ-4MB STR THR	1

09003709, BASIC UNIT ASSEMBLY, 1135 KNEE BOOM

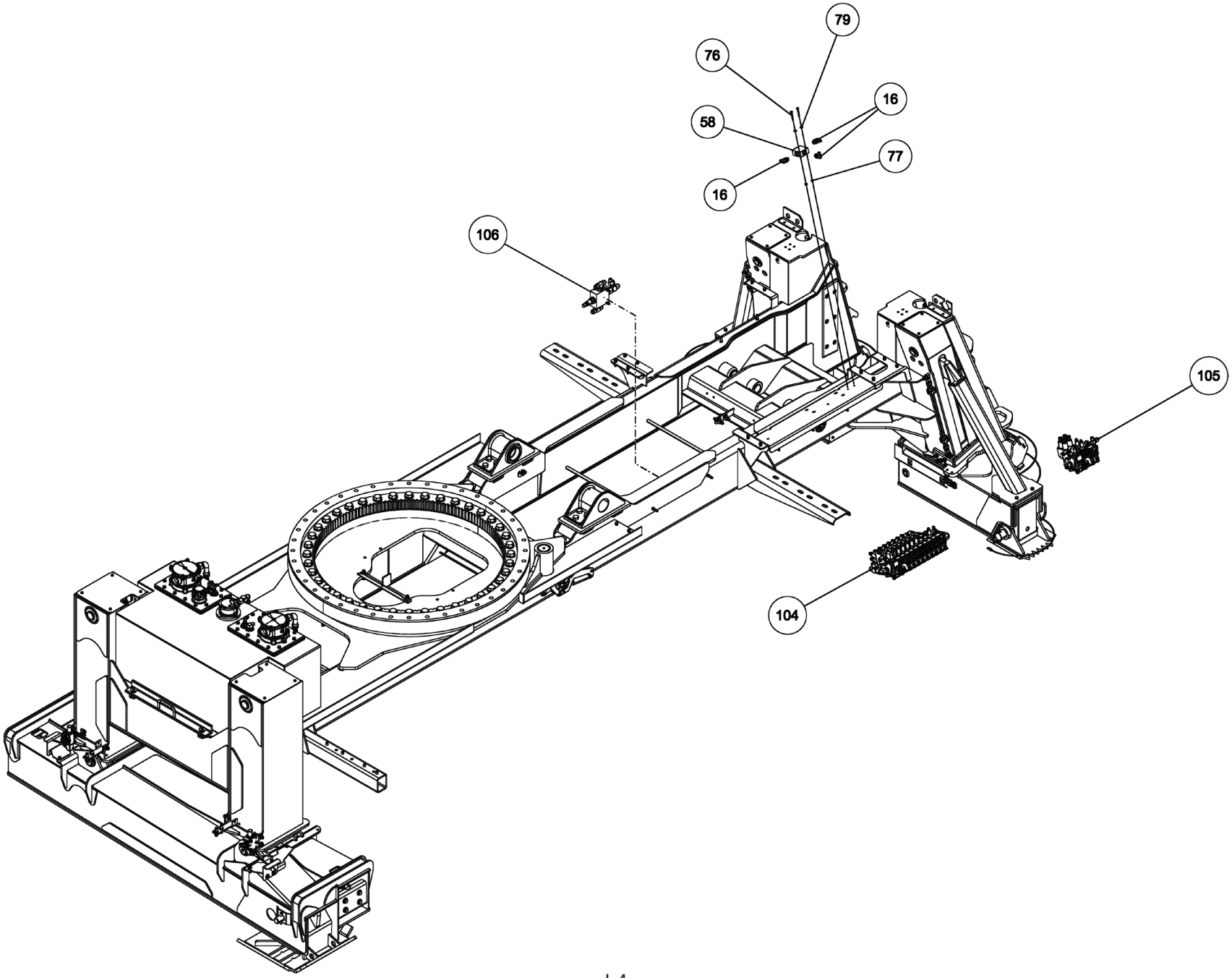

09003709, BASIC UNIT ASSEMBLY, 1135 KNEE BOOM

ITEM	PART NUMBER	DESCRIPTION	QTY
	09003709	BUA, 1135 KNEE BOOM	-
1	0300113	GREASE FITTING, 1/4-28 STR	1
2	03003419	HOSE, HYD 132" LG	1
3	03003420	HOSE, HYD 60" LG	1
4	03003421	HOSE, HYD 18"LG	4
5	03003424	HOSE, HYD 138"	1
6	03003425	HOSE, HYD 90" LG	4
7	03003426	HOSE, HYD 45" LG	6
8	0300364	CLAMP-HOSE,0.875"-2.75" 50"LBS	2
9	0300434	FITTING, HOSE BARB, 2	1
10	0300558	HOSE, SUCTION 2"ID 100R4 (C4)	1
11	0300835	KNOB-BOOM (UP-DOWN)	1
12	0300837	KNOB-BOOM (IN-OUT)	1
13	0300865	FITTING, CONNECTOR 8MJ-8MJ	1
14	0301113	HOSE HYD, 82"	2
15	0301377	FITTING, TEE,3/8" JIC	1
16	0301470	FITTING, 90ELB 6MJ-8MB90	3
17	0301473	HOSE HYD, 18" LG	1
18	0301522	ADAPTER, 6MJ-6MB	1
19	0301529	HOSE HYD, 58	2
20	03015922	STAUFF CLAMP, 3/8 TWIN	4
21	03016142	TUBE, HYD ASSY SF TO O/R	4
22	0301695	HOSE HYD, 91"	1
23	0301909	RECEPTACLE BOOT	1
24	0301946	FITTING, BLKHD CONNECT	3
25	0301947	FITTING, 45 DEG ADAPTER	1
26	0301948	HD 7 WAY TRAILER CONNECT	1
27	0301961	BALL VALVE 2	1
28	0302056	HOSE HYD, 183"	5
29	0302205	GAUGE, FLUSH MNTG-6000 PSI	2
30	0302367	PIPE NIPPLE - 2 X 4	1
31	0302372	HOSE HYD, 240" LG	4
32	0302534	FITTING, 45 DEG ELBOW	2
33	0302604	HOSE HYD, 44"	2
34	0302632	HOSE HYD, 40"	4
35	0302805	HOSE HYD, 10"	1
36	0302813	HOSE HYD, 108" LG	1
37	0302856	KNOB-TILT, 3/8-16 THREAD	1
38	0302881	HOSE HYD, 45"	1
39	0303170	HOSE, HYD. 75"	3
40	0303185	HOSE HYD, 66" LG.	4
41	0303188	HOSE HYD, 75" LG	1
42	0303339	HOSE HYD, 45" LG	1
43	0303340	HOSE HYD, 50" LG	1
44	0303379	KNOB, SWING CW - CCW	1
45	0303380	KNOB-UNDERLIFT (IN-OUT)	1

ITEM	PART NUMBER	DESCRIPTION	QTY
46	0303381	KNOB - UNDERLIFT (UP-DN)	1
47	0303391	HOSE 8AT2(8FJX-8FJ90) 110"	1
48	0303538	FITT, ADAPTER -BRASS 8FP-6MP	1
49	0303539	QUICK DISCONNECT 3/8 FPT	1
50	0304363	QUICK DISCONNECT 1/2 FPT	2
51	0306537	EMERGENCY SWITCH(RAMSEY)	2
52	0306540	ROTARY SELECT SWITCH OPER	1
53	0306921	PIPE PLUG, 2" SQ HD	1
54	0307052	WASHER, RUBBER 7/16X1 1/4X1/4	2
55	0307151	RUBBER FENDER	3
56	0307472	HOSE, HYD ASSY 24" LG	1
57	0307604	KNOB, RED LONG - SK0700-07	3
58	0310406	VALVE, SHUTTLE LS10-30-8T-N	1
59	0310456	PUSH BUTTN OPER W/MTG N/C	2
60	0310581	HOSE ASSY- 96" 8 fjx-10fjx90	4
61	0310956	TOOLBOX LH AL ROT TRI 2010 W/	1
62	0310957	TOOLBOX RH AL ROT TRI 2010 W/	1
63	0311191	ROLLER, POLY, 4" X 5/8"	2
64	0311417	HOSE, 196" 3/8 2 X STRAIGHT	2
65	0311426	HOSE ASSY, 80" 4FJX-4FJX45	1
66	0311500	LIGHT 6"OVAL REVERSE LED	2
67	0311502	LIGHT 6"OVAL CLEAR-AMBER LED	4
68	0311503	GROMMET, LIGHT 6" OVAL	1
69	0311514	LIGHT 2.5" CLEAR LENS-RED LED	2
70	0311516	GROMMET, LIGHT 2.5" ROUND	2
71	0312309	LIGHT 6" OVAL GLO-LT STT CLR/R	4
72	0313129	HOSE, 1 SUCTION 16C4	3
73	0400005	SCREW, 6-32X1/2 PRH SS	6
74	04000381	SS BHSCS 1/4-20 X 1	1
75	0400066	SCREW, 1/4-20X3/4 HHC GR5	2
76	0400078	SCREW, 1/4-20X2 HHC GR5	2
77	0400367	NUT, 1/4-20 LOK	2
78	0400379	NUT, 5/16-18 SPR J	1
79	0400451	WASHER, 1/4	2
80	0400452	LKWASHER, 1/4	2
81	0400454	WASHER, 1/4 SS	1
82	0400491	LKWASHER, 1/2	2
83	0400492	WASHER, 1/2	2
84	0400497	WASHER, 1/2 GR8	6
85	0400498	WASHER, 1/2X2X0.125	1
86	0400900	NUT, 1/2-13 LOK JAM	2
87	0402020	SCREW, 1/4-20X3/4 HHC SS	2
88	0402021	SCREW, 1/4-20X1 HHC SS	1
89	0402043	SCREW, 3/8-16X1-1/4 HHC SS	8
90	0402094	NUT, HEX 6-32 SS	6
91	0402111	LKWASHER, 1/4 SS	3

ITEM	PART NUMBER	DESCRIPTION	QTY
92	0402113	NUT, 1/4-20 LOK SS	2
93	0402114	NUT, 1/4-20 LOK REV SS	1
94	0402120	WASHER, 3/8 SS	8
95	0402123	NUT, 3/8-16 LOK SS	8
96	07005922	MOUNT-HYD GAUGE	1
97	0712230	BOSS, TURNTABLE LOCK	1
98	0806994	HOUSE LOCK INDICATOR WELD	1
99	0810433	HHU CHAIN ROLLER BRACKET, LH	1
100	0810434	HHU CHAIN ROLLER BRACKET, RH	1
101	09000097	ILLUMINATED LEGEND ASSY-LT UP	1
102	09000135	ILLUMINATED LEGEND ASSY-RT UP	1
103	09001440	50K DRAG WINCH ASSY	1
104	09002243	VALVE ASSY, 1150 KNEE MAIN	1
105	09002244	VALVE ASSY, 1150 KNEE BOOM U/L	1
106	09002246	VALVE ASSY, PRESSURE REDUC	1
107	09002247	CONTROL ASSY, 11 HANDLE WV	1
108	09002910	PUMP KIT, 4K KNEE BOOM	1
109	09002949	ILLUM LEGEND LT 1150 KNEE	1
110	09003710	SUBFRAME ASSY, 1135 KNEE	1
111	09003733	WRECKER FRAME ASSY 1135	1
112	09003870	WINCH ASSY 1135 W/ 35K WINCH	1
113	09004266	U/L BOOM ASSEMBLY (SHORT)	1
114	0908418	KIT-MUDFLAP CENTURY ROTATOR	1
115	0910188	2-STAGE FRONT OUTRIGGER ASY	1
116	0910246	3-STAGE REAR OUTRIGGER ASSY	1
117	0910615	OUTRIGGER CONT VALVE KIT	1
118	0910935	XBAR ASY HRDWR-XHD 5X5 CENT	1
119	0911237	ILLUM LEGEND ASSY RH LWR WLV	1
120	0911324	RH CTL STATION ASSY 5 WINCH W	1
121	0911957	KIT, D-RING PARTS	2
122	0912071	ASSY, 1135 BOOM	1
123	124004464	ALUM HEEL PLATE-14" SDU4&COA	1
124	24773017	HOSE ASSEMBLY 140"LG	2
125	24773018	HOSE ASSEMBLY 140"LG	2
126	9018016	HOSE CLAMP HS-20 1 1/4"	4
127	9024041	SWITCH-ROCKER, LIGHTED 12V	2
128	9041402	1/2 NC X 1 1/4 HHCS PLT GR8	6
129	9041403	1/2 NC X 1 1/2 HHCS PL GR8	1
130	9402970	TOOLBOX MTG. PAD	1
131	942480011	PLATE,SLOT-SS REAR WASHER	2
132	AWS-6821-A	HOSE ASSY-PRESSURE	8
133	FC41	FITTING-90DEG BLKHD ELB W/ NUT	8
134	HC1291	FITTING, 4MJ-4MB STR THR	1

09003709, BASIC UNIT ASSEMBLY, 1135 KNEE BOOM

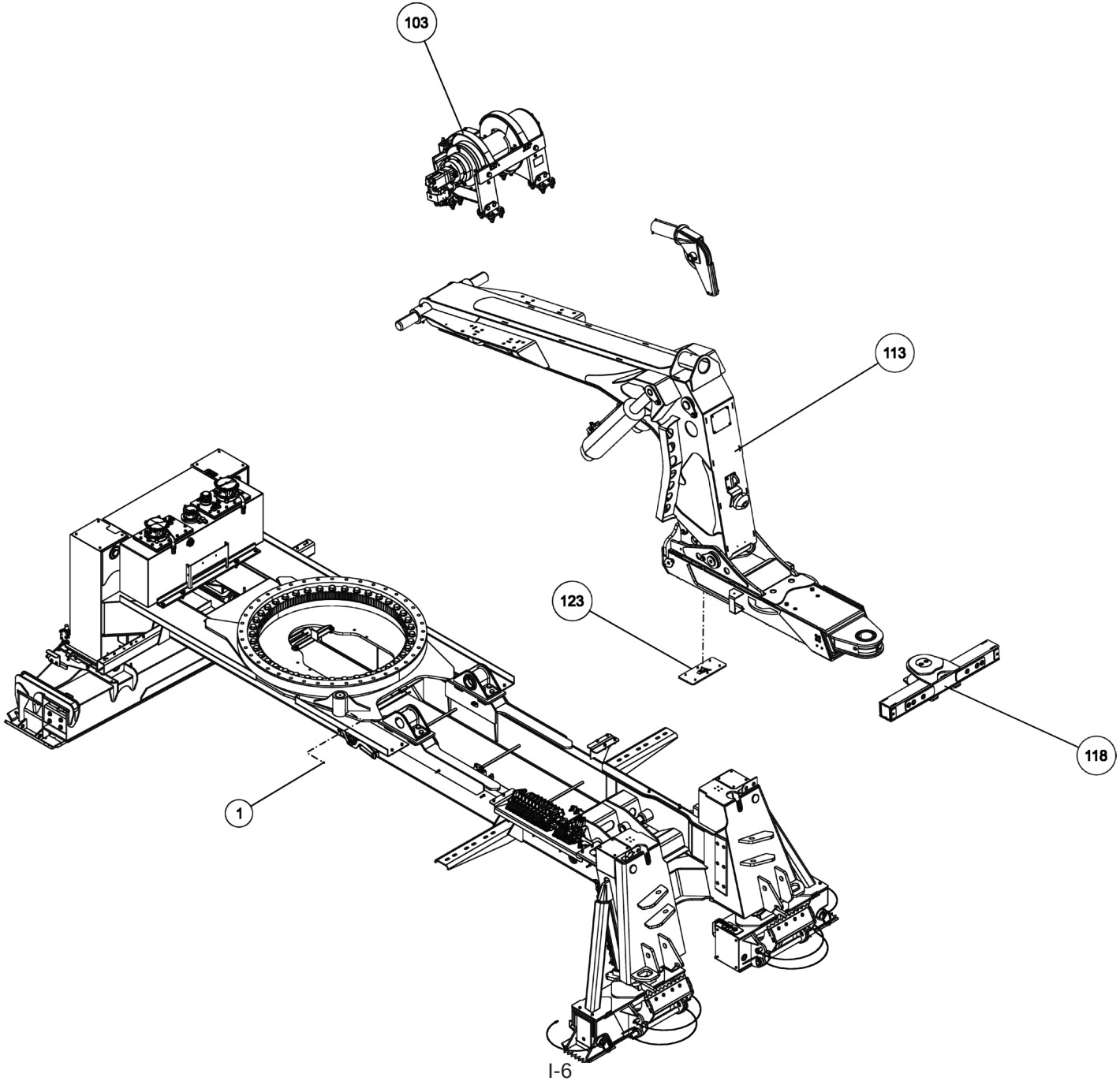

09003709, BASIC UNIT ASSEMBLY, 1135 KNEE BOOM

ITEM	PART NUMBER	DESCRIPTION	QTY
	09003709	BUA, 1135 KNEE BOOM	-
1	0300113	GREASE FITTING, 1/4-28 STR	1
2	03003419	HOSE, HYD 132" LG	1
3	03003420	HOSE, HYD 60" LG	1
4	03003421	HOSE, HYD 18"LG	4
5	03003424	HOSE, HYD 138"	1
6	03003425	HOSE, HYD 90" LG	4
7	03003426	HOSE, HYD 45" LG	6
8	0300364	CLAMP-HOSE,0.875"-2.75" 50"LBS	2
9	0300434	FITTING, HOSE BARB, 2	1
10	0300558	HOSE, SUCTION 2"ID 100R4 (C4)	1
11	0300835	KNOB-BOOM (UP-DOWN)	1
12	0300837	KNOB-BOOM (IN-OUT)	1
13	0300865	FITTING, CONNECTOR 8MJ-8MJ	1
14	0301113	HOSE HYD, 82"	2
15	0301377	FITTING, TEE,3/8" JIC	1
16	0301470	FITTING, 90ELB 6MJ-8MB90	3
17	0301473	HOSE HYD, 18" LG	1
18	0301522	ADAPTER, 6MJ-6MB	1
19	0301529	HOSE HYD, 58	2
20	03015922	STAUFF CLAMP, 3/8 TWIN	4
21	03016142	TUBE, HYD ASSY SF TO O/R	4
22	0301695	HOSE HYD, 91"	1
23	0301909	RECEPTACLE BOOT	1
24	0301946	FITTING, BLKHD CONNECT	3
25	0301947	FITTING, 45 DEG ADAPTER	1
26	0301948	HD 7 WAY TRAILER CONNECT	1
27	0301961	BALL VALVE 2	1
28	0302056	HOSE HYD, 183"	5
29	0302205	GAUGE, FLUSH MNTG-6000 PSI	2
30	0302367	PIPE NIPPLE - 2 X 4	1
31	0302372	HOSE HYD, 240" LG	4
32	0302534	FITTING, 45 DEG ELBOW	2
33	0302604	HOSE HYD, 44"	2
34	0302632	HOSE HYD, 40"	4
35	0302805	HOSE HYD, 10"	1
36	0302813	HOSE HYD, 108" LG	1
37	0302856	KNOB-TILT, 3/8-16 THREAD	1
38	0302881	HOSE HYD, 45"	1
39	0303170	HOSE, HYD. 75"	3
40	0303185	HOSE HYD, 66" LG.	4
41	0303188	HOSE HYD, 75" LG	1
42	0303339	HOSE HYD, 45" LG	1
43	0303340	HOSE HYD, 50" LG	1
44	0303379	KNOB, SWING CW - CCW	1
45	0303380	KNOB-UNDERLIFT (IN-OUT)	1

ITEM	PART NUMBER	DESCRIPTION	QTY
46	0303381	KNOB - UNDERLIFT (UP-DN)	1
47	0303391	HOSE 8AT2(8FJX-8FJ90) 110"	1
48	0303538	FITT, ADAPTER -BRASS 8FP-6MP	1
49	0303539	QUICK DISCONNECT 3/8 FPT	1
50	0304363	QUICK DISCONNECT 1/2 FPT	2
51	0306537	EMERGENCY SWITCH(RAMSEY)	2
52	0306540	ROTARY SELECT SWITCH OPER	1
53	0306921	PIPE PLUG, 2" SQ HD	1
54	0307052	WASHER, RUBBER 7/16X1 1/4X1/4	2
55	0307151	RUBBER FENDER	3
56	0307472	HOSE, HYD ASSY 24" LG	1
57	0307604	KNOB, RED LONG - SK0700-07	3
58	0310406	VALVE, SHUTTLE LS10-30-8T-N	1
59	0310456	PUSH BUTTN OPER W/MTG N/C	2
60	0310581	HOSE ASSY- 96" 8 fjx-10fjx90	4
61	0310956	TOOLBOX LH AL ROT TRI 2010 W/	1
62	0310957	TOOLBOX RH AL ROT TRI 2010 W/	1
63	0311191	ROLLER, POLY, 4" X 5/8"	2
64	0311417	HOSE, 196" 3/8 2 X STRAIGHT	2
65	0311426	HOSE ASSY, 80" 4FJX-4FJX45	1
66	0311500	LIGHT 6"OVAL REVERSE LED	2
67	0311502	LIGHT 6"OVAL CLEAR-AMBER LED	4
68	0311503	GROMMET, LIGHT 6" OVAL	1
69	0311514	LIGHT 2.5" CLEAR LENS-RED LED	2
70	0311516	GROMMET, LIGHT 2.5" ROUND	2
71	0312309	LIGHT 6" OVAL GLO-LT STT CLR/R	4
72	0313129	HOSE, 1 SUCTION 16C4	3
73	0400005	SCREW, 6-32X1/2 PRH SS	6
74	04000381	SS BHSCS 1/4-20 X 1	1
75	0400066	SCREW, 1/4-20X3/4 HHC GR5	2
76	0400078	SCREW, 1/4-20X2 HHC GR5	2
77	0400367	NUT, 1/4-20 LOK	2
78	0400379	NUT, 5/16-18 SPR J	1
79	0400451	WASHER, 1/4	2
80	0400452	LKWASHER, 1/4	2
81	0400454	WASHER, 1/4 SS	1
82	0400491	LKWASHER, 1/2	2
83	0400492	WASHER, 1/2	2
84	0400497	WASHER, 1/2 GR8	6
85	0400498	WASHER, 1/2X2X0.125	1
86	0400900	NUT, 1/2-13 LOK JAM	2
87	0402020	SCREW, 1/4-20X3/4 HHC SS	2
88	0402021	SCREW, 1/4-20X1 HHC SS	1
89	0402043	SCREW, 3/8-16X1-1/4 HHC SS	8
90	0402094	NUT, HEX 6-32 SS	6
91	0402111	LKWASHER, 1/4 SS	3

ITEM	PART NUMBER	DESCRIPTION	QTY
92	0402113	NUT, 1/4-20 LOK SS	2
93	0402114	NUT, 1/4-20 LOK REV SS	1
94	0402120	WASHER, 3/8 SS	8
95	0402123	NUT, 3/8-16 LOK SS	8
96	07005922	MOUNT-HYD GAUGE	1
97	0712230	BOSS, TURNTABLE LOCK	1
98	0806994	HOUSE LOCK INDICATOR WELD	1
99	0810433	HHU CHAIN ROLLER BRACKET, LH	1
100	0810434	HHU CHAIN ROLLER BRACKET, RH	1
101	09000097	ILLUMINATED LEGEND ASSY-LT UP	1
102	09000135	ILLUMINATED LEGEND ASSY-RT UP	1
103	09001440	50K DRAG WINCH ASSY	1
104	09002243	VALVE ASSY, 1150 KNEE MAIN	1
105	09002244	VALVE ASSY, 1150 KNEE BOOM U/L	1
106	09002246	VALVE ASSY, PRESSURE REDUC	1
107	09002247	CONTROL ASSY, 11 HANDLE WV	1
108	09002910	PUMP KIT, 4K KNEE BOOM	1
109	09002949	ILLUM LEGEND LT 1150 KNEE	1
110	09003710	SUBFRAME ASSY, 1135 KNEE	1
111	09003733	WRECKER FRAME ASSY 1135	1
112	09003870	WINCH ASSY 1135 W/ 35K WINCH	1
113	09004266	U/L BOOM ASSEMBLY (SHORT)	1
114	0908418	KIT-MUDFLAP CENTURY ROTATOR	1
115	0910188	2-STAGE FRONT OUTRIGGER ASY	1
116	0910246	3-STAGE REAR OUTRIGGER ASSY	1
117	0910615	OUTRIGGER CONT VALVE KIT	1
118	0910935	XBAR ASY HRDWR-XHD 5X5 CENT	1
119	0911237	ILLUM LEGEND ASSY RH LWR WLV	1
120	0911324	RH CTL STATION ASSY 5 WINCH W	1
121	0911957	KIT, D-RING PARTS	2
122	0912071	ASSY, 1135 BOOM	1
123	124004464	ALUM HEEL PLATE-14" SDU4&COA	1
124	24773017	HOSE ASSEMBLY 140"LG	2
125	24773018	HOSE ASSEMBLY 140"LG	2
126	9018016	HOSE CLAMP HS-20 1 1/4"	4
127	9024041	SWITCH-ROCKER, LIGHTED 12V	2
128	9041402	1/2 NC X 1 1/4 HHCS PLT GR8	6
129	9041403	1/2 NC X 1 1/2 HHCS PL GR8	1
130	9402970	TOOLBOX MTG. PAD	1
131	942480011	PLATE,SLOT-SS REAR WASHER	2
132	AWS-6821-A	HOSE ASSY-PRESSURE	8
133	FC41	FITTING-90DEG BLKHD ELB W/ NUT	8
134	HC1291	FITTING, 4MJ-4MB STR THR	1

09003709, BASIC UNIT ASSEMBLY, 1135 KNEE BOOM

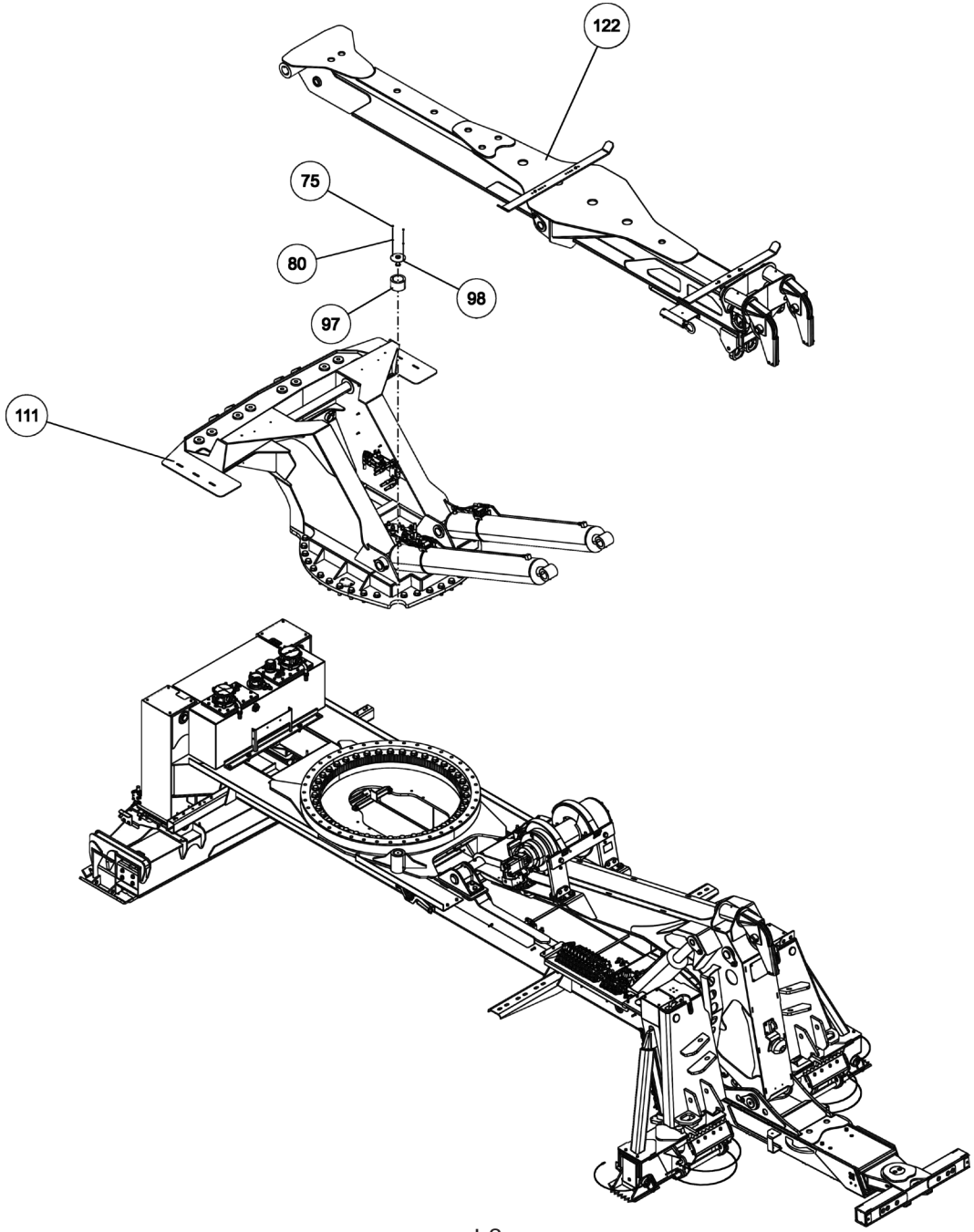

09003709, BASIC UNIT ASSEMBLY, 1135 KNEE BOOM

ITEM	PART NUMBER	DESCRIPTION	QTY
	09003709	BUA, 1135 KNEE BOOM	-
1	0300113	GREASE FITTING, 1/4-28 STR	1
2	03003419	HOSE, HYD 132" LG	1
3	03003420	HOSE, HYD 60" LG	1
4	03003421	HOSE, HYD 18"LG	4
5	03003424	HOSE, HYD 138"	1
6	03003425	HOSE, HYD 90" LG	4
7	03003426	HOSE, HYD 45" LG	6
8	0300364	CLAMP-HOSE,0.875"-2.75" 50"LBS	2
9	0300434	FITTING, HOSE BARB, 2	1
10	0300558	HOSE, SUCTION 2"ID 100R4 (C4)	1
11	0300835	KNOB-BOOM (UP-DOWN)	1
12	0300837	KNOB-BOOM (IN-OUT)	1
13	0300865	FITTING, CONNECTOR 8MJ-8MJ	1
14	0301113	HOSE HYD, 82"	2
15	0301377	FITTING, TEE,3/8" JIC	1
16	0301470	FITTING, 90ELB 6MJ-8MB90	3
17	0301473	HOSE HYD, 18" LG	1
18	0301522	ADAPTER, 6MJ-6MB	1
19	0301529	HOSE HYD, 58	2
20	03015922	STAUFF CLAMP, 3/8 TWIN	4
21	03016142	TUBE, HYD ASSY SF TO O/R	4
22	0301695	HOSE HYD, 91"	1
23	0301909	RECEPTACLE BOOT	1
24	0301946	FITTING, BLKHD CONNECT	3
25	0301947	FITTING, 45 DEG ADAPTER	1
26	0301948	HD 7 WAY TRAILER CONNECT	1
27	0301961	BALL VALVE 2	1
28	0302056	HOSE HYD, 183"	5
29	0302205	GAUGE, FLUSH MNTG-6000 PSI	2
30	0302367	PIPE NIPPLE - 2 X 4	1
31	0302372	HOSE HYD, 240" LG	4
32	0302534	FITTING, 45 DEG ELBOW	2
33	0302604	HOSE HYD, 44"	2
34	0302632	HOSE HYD, 40"	4
35	0302805	HOSE HYD, 10"	1
36	0302813	HOSE HYD, 108" LG	1
37	0302856	KNOB-TILT, 3/8-16 THREAD	1
38	0302881	HOSE HYD, 45"	1
39	0303170	HOSE, HYD. 75"	3
40	0303185	HOSE HYD, 66" LG.	4
41	0303188	HOSE HYD, 75" LG	1
42	0303339	HOSE HYD, 45" LG	1
43	0303340	HOSE HYD, 50" LG	1
44	0303379	KNOB, SWING CW - CCW	1
45	0303380	KNOB-UNDERLIFT (IN-OUT)	1

ITEM	PART NUMBER	DESCRIPTION	QTY
46	0303381	KNOB - UNDERLIFT (UP-DN)	1
47	0303391	HOSE 8AT2(8FJX-8FJ90) 110"	1
48	0303538	FITT, ADAPTER -BRASS 8FP-6MP	1
49	0303539	QUICK DISCONNECT 3/8 FPT	1
50	0304363	QUICK DISCONNECT 1/2 FPT	2
51	0306537	EMERGENCY SWITCH(RAMSEY)	2
52	0306540	ROTARY SELECT SWITCH OPER	1
53	0306921	PIPE PLUG, 2" SQ HD	1
54	0307052	WASHER, RUBBER 7/16X1 1/4X1/4	2
55	0307151	RUBBER FENDER	3
56	0307472	HOSE, HYD ASSY 24" LG	1
57	0307604	KNOB, RED LONG - SK0700-07	3
58	0310406	VALVE, SHUTTLE LS10-30-8T-N	1
59	0310456	PUSH BUTTN OPER W/MTG N/C	2
60	0310581	HOSE ASSY- 96" 8 fjx-10fjx90	4
61	0310956	TOOLBOX LH AL ROT TRI 2010 W/	1
62	0310957	TOOLBOX RH AL ROT TRI 2010 W/	1
63	0311191	ROLLER, POLY, 4" X 5/8"	2
64	0311417	HOSE, 196" 3/8 2 X STRAIGHT	2
65	0311426	HOSE ASSY, 80" 4FJX-4FJX45	1
66	0311500	LIGHT 6"OVAL REVERSE LED	2
67	0311502	LIGHT 6"OVAL CLEAR-AMBER LED	4
68	0311503	GROMMET, LIGHT 6" OVAL	1
69	0311514	LIGHT 2.5" CLEAR LENS-RED LED	2
70	0311516	GROMMET, LIGHT 2.5" ROUND	2
71	0312309	LIGHT 6" OVAL GLO-LT STT CLR/R	4
72	0313129	HOSE, 1 SUCTION 16C4	3
73	0400005	SCREW, 6-32X1/2 PRH SS	6
74	04000381	SS BHSCS 1/4-20 X 1	1
75	0400066	SCREW, 1/4-20X3/4 HHC GR5	2
76	0400078	SCREW, 1/4-20X2 HHC GR5	2
77	0400367	NUT, 1/4-20 LOK	2
78	0400379	NUT, 5/16-18 SPR J	1
79	0400451	WASHER, 1/4	2
80	0400452	LKWASHER, 1/4	2
81	0400454	WASHER, 1/4 SS	1
82	0400491	LKWASHER, 1/2	2
83	0400492	WASHER, 1/2	2
84	0400497	WASHER, 1/2 GR8	6
85	0400498	WASHER, 1/2X2X0.125	1
86	0400900	NUT, 1/2-13 LOK JAM	2
87	0402020	SCREW, 1/4-20X3/4 HHC SS	2
88	0402021	SCREW, 1/4-20X1 HHC SS	1
89	0402043	SCREW, 3/8-16X1-1/4 HHC SS	8
90	0402094	NUT, HEX 6-32 SS	6
91	0402111	LKWASHER, 1/4 SS	3

ITEM	PART NUMBER	DESCRIPTION	QTY
92	0402113	NUT, 1/4-20 LOK SS	2
93	0402114	NUT, 1/4-20 LOK REV SS	1
94	0402120	WASHER, 3/8 SS	8
95	0402123	NUT, 3/8-16 LOK SS	8
96	07005922	MOUNT-HYD GAUGE	1
97	0712230	BOSS, TURNTABLE LOCK	1
98	0806994	HOUSE LOCK INDICATOR WELD	1
99	0810433	HHU CHAIN ROLLER BRACKET, LH	1
100	0810434	HHU CHAIN ROLLER BRACKET, RH	1
101	09000097	ILLUMINATED LEGEND ASSY-LT UP	1
102	09000135	ILLUMINATED LEGEND ASSY-RT UP	1
103	09001440	50K DRAG WINCH ASSY	1
104	09002243	VALVE ASSY, 1150 KNEE MAIN	1
105	09002244	VALVE ASSY, 1150 KNEE BOOM U/L	1
106	09002246	VALVE ASSY, PRESSURE REDUC	1
107	09002247	CONTROL ASSY, 11 HANDLE WV	1
108	09002910	PUMP KIT, 4K KNEE BOOM	1
109	09002949	ILLUM LEGEND LT 1150 KNEE	1
110	09003710	SUBFRAME ASSY, 1135 KNEE	1
111	09003733	WRECKER FRAME ASSY 1135	1
112	09003870	WINCH ASSY 1135 W/ 35K WINCH	1
113	09004266	U/L BOOM ASSEMBLY (SHORT)	1
114	0908418	KIT-MUDFLAP CENTURY ROTATOR	1
115	0910188	2-STAGE FRONT OUTRIGGER ASY	1
116	0910246	3-STAGE REAR OUTRIGGER ASSY	1
117	0910615	OUTRIGGER CONT VALVE KIT	1
118	0910935	XBAR ASY HRDWR-XHD 5X5 CENT	1
119	0911237	ILLUM LEGEND ASSY RH LWR WLV	1
120	0911324	RH CTL STATION ASSY 5 WINCH W	1
121	0911957	KIT, D-RING PARTS	2
122	0912071	ASSY, 1135 BOOM	1
123	124004464	ALUM HEEL PLATE-14" SDU4&COA	1
124	24773017	HOSE ASSEMBLY 140"LG	2
125	24773018	HOSE ASSEMBLY 140"LG	2
126	9018016	HOSE CLAMP HS-20 1 1/4"	4
127	9024041	SWITCH-ROCKER, LIGHTED 12V	2
128	9041402	1/2 NC X 1 1/4 HHCS PLT GR8	6
129	9041403	1/2 NC X 1 1/2 HHCS PL GR8	1
130	9402970	TOOLBOX MTG. PAD	1
131	942480011	PLATE,SLOT-SS REAR WASHER	2
132	AWS-6821-A	HOSE ASSY-PRESSURE	8
133	FC41	FITTING-90DEG BLKHD ELB W/ NUT	8
134	HC1291	FITTING, 4MJ-4MB STR THR	1

09003709, BASIC UNIT ASSEMBLY, 1135 KNEE BOOM

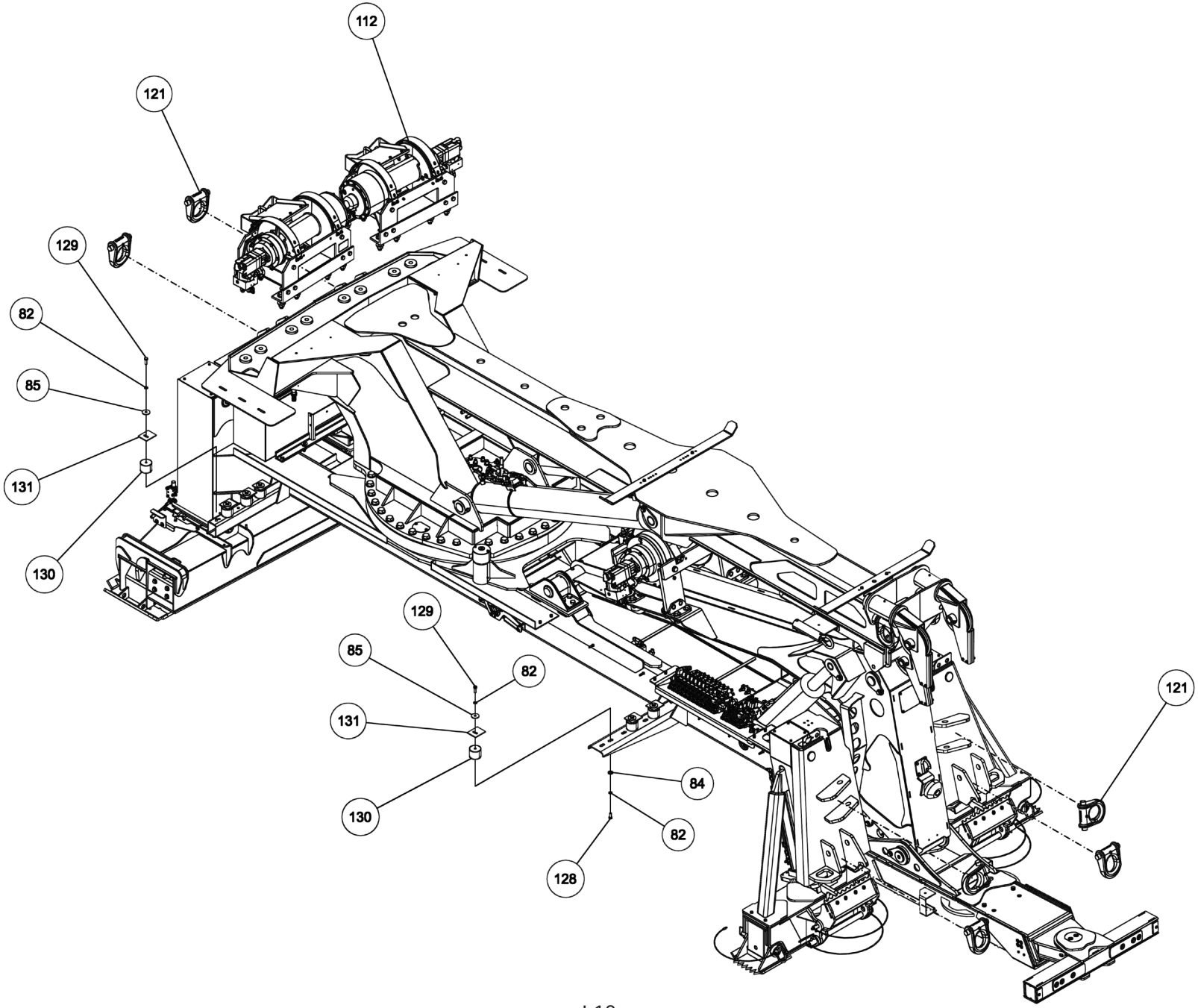

09003709, BASIC UNIT ASSEMBLY, 1135 KNEE BOOM

ITEM	PART NUMBER	DESCRIPTION	QTY
	09003709	BUA, 1135 KNEE BOOM	-
1	0300113	GREASE FITTING, 1/4-28 STR	1
2	03003419	HOSE, HYD 132" LG	1
3	03003420	HOSE, HYD 60" LG	1
4	03003421	HOSE, HYD 18"LG	4
5	03003424	HOSE, HYD 138"	1
6	03003425	HOSE, HYD 90" LG	4
7	03003426	HOSE, HYD 45" LG	6
8	0300364	CLAMP-HOSE,0.875"-2.75" 50"LBS	2
9	0300434	FITTING, HOSE BARB, 2	1
10	0300558	HOSE, SUCTION 2"ID 100R4 (C4)	1
11	0300835	KNOB-BOOM (UP-DOWN)	1
12	0300837	KNOB-BOOM (IN-OUT)	1
13	0300865	FITTING, CONNECTOR 8MJ-8MJ	1
14	0301113	HOSE HYD, 82"	2
15	0301377	FITTING, TEE,3/8" JIC	1
16	0301470	FITTING, 90ELB 6MJ-8MB90	3
17	0301473	HOSE HYD, 18" LG	1
18	0301522	ADAPTER, 6MJ-6MB	1
19	0301529	HOSE HYD, 58	2
20	03015922	STAUFF CLAMP, 3/8 TWIN	4
21	03016142	TUBE, HYD ASSY SF TO O/R	4
22	0301695	HOSE HYD, 91"	1
23	0301909	RECEPTACLE BOOT	1
24	0301946	FITTING, BLKHD CONNECT	3
25	0301947	FITTING, 45 DEG ADAPTER	1
26	0301948	HD 7 WAY TRAILER CONNECT	1
27	0301961	BALL VALVE 2	1
28	0302056	HOSE HYD, 183"	5
29	0302205	GAUGE, FLUSH MNTG-6000 PSI	2
30	0302367	PIPE NIPPLE - 2 X 4	1
31	0302372	HOSE HYD, 240" LG	4
32	0302534	FITTING, 45 DEG ELBOW	2
33	0302604	HOSE HYD, 44"	2
34	0302632	HOSE HYD, 40"	4
35	0302805	HOSE HYD, 10"	1
36	0302813	HOSE HYD, 108" LG	1
37	0302856	KNOB-TILT, 3/8-16 THREAD	1
38	0302881	HOSE HYD, 45"	1
39	0303170	HOSE, HYD. 75"	3
40	0303185	HOSE HYD, 66" LG.	4
41	0303188	HOSE HYD, 75" LG	1
42	0303339	HOSE HYD, 45" LG	1
43	0303340	HOSE HYD, 50" LG	1
44	0303379	KNOB, SWING CW - CCW	1
45	0303380	KNOB-UNDERLIFT (IN-OUT)	1

ITEM	PART NUMBER	DESCRIPTION	QTY
46	0303381	KNOB - UNDERLIFT (UP-DN)	1
47	0303391	HOSE 8AT2(8FJX-8FJ90) 110"	1
48	0303538	FITT, ADAPTER -BRASS 8FP-6MP	1
49	0303539	QUICK DISCONNECT 3/8 FPT	1
50	0304363	QUICK DISCONNECT 1/2 FPT	2
51	0306537	EMERGENCY SWITCH(RAMSEY)	2
52	0306540	ROTARY SELECT SWITCH OPER	1
53	0306921	PIPE PLUG, 2" SQ HD	1
54	0307052	WASHER, RUBBER 7/16X1 1/4X1/4	2
55	0307151	RUBBER FENDER	3
56	0307472	HOSE, HYD ASSY 24" LG	1
57	0307604	KNOB, RED LONG - SK0700-07	3
58	0310406	VALVE, SHUTTLE LS10-30-8T-N	1
59	0310456	PUSH BUTTN OPER W/MTG N/C	2
60	0310581	HOSE ASSY- 96" 8 fjx-10fjx90	4
61	0310956	TOOLBOX LH AL ROT TRI 2010 W/	1
62	0310957	TOOLBOX RH AL ROT TRI 2010 W/	1
63	0311191	ROLLER, POLY, 4" X 5/8"	2
64	0311417	HOSE, 196" 3/8 2 X STRAIGHT	2
65	0311426	HOSE ASSY, 80" 4FJX-4FJX45	1
66	0311500	LIGHT 6"OVAL REVERSE LED	2
67	0311502	LIGHT 6"OVAL CLEAR-AMBER LED	4
68	0311503	GROMMET, LIGHT 6" OVAL	1
69	0311514	LIGHT 2.5" CLEAR LENS-RED LED	2
70	0311516	GROMMET, LIGHT 2.5" ROUND	2
71	0312309	LIGHT 6" OVAL GLO-LT STT CLR/R	4
72	0313129	HOSE, 1 SUCTION 16C4	3
73	0400005	SCREW, 6-32X1/2 PRH SS	6
74	04000381	SS BHSCS 1/4-20 X 1	1
75	0400066	SCREW, 1/4-20X3/4 HHC GR5	2
76	0400078	SCREW, 1/4-20X2 HHC GR5	2
77	0400367	NUT, 1/4-20 LOK	2
78	0400379	NUT, 5/16-18 SPR J	1
79	0400451	WASHER, 1/4	2
80	0400452	LKWASHER, 1/4	2
81	0400454	WASHER, 1/4 SS	1
82	0400491	LKWASHER, 1/2	2
83	0400492	WASHER, 1/2	2
84	0400497	WASHER, 1/2 GR8	6
85	0400498	WASHER, 1/2X2X0.125	1
86	0400900	NUT, 1/2-13 LOK JAM	2
87	0402020	SCREW, 1/4-20X3/4 HHC SS	2
88	0402021	SCREW, 1/4-20X1 HHC SS	1
89	0402043	SCREW, 3/8-16X1-1/4 HHC SS	8
90	0402094	NUT, HEX 6-32 SS	6
91	0402111	LKWASHER, 1/4 SS	3

ITEM	PART NUMBER	DESCRIPTION	QTY
92	0402113	NUT, 1/4-20 LOK SS	2
93	0402114	NUT, 1/4-20 LOK REV SS	1
94	0402120	WASHER, 3/8 SS	8
95	0402123	NUT, 3/8-16 LOK SS	8
96	07005922	MOUNT-HYD GAUGE	1
97	0712230	BOSS, TURNTABLE LOCK	1
98	0806994	HOUSE LOCK INDICATOR WELD	1
99	0810433	HHU CHAIN ROLLER BRACKET, LH	1
100	0810434	HHU CHAIN ROLLER BRACKET, RH	1
101	09000097	ILLUMINATED LEGEND ASSY-LT UP	1
102	09000135	ILLUMINATED LEGEND ASSY-RT UP	1
103	09001440	50K DRAG WINCH ASSY	1
104	09002243	VALVE ASSY, 1150 KNEE MAIN	1
105	09002244	VALVE ASSY, 1150 KNEE BOOM U/L	1
106	09002246	VALVE ASSY, PRESSURE REDUC	1
107	09002247	CONTROL ASSY, 11 HANDLE WV	1
108	09002910	PUMP KIT, 4K KNEE BOOM	1
109	09002949	ILLUM LEGEND LT 1150 KNEE	1
110	09003710	SUBFRAME ASSY, 1135 KNEE	1
111	09003733	WRECKER FRAME ASSY 1135	1
112	09003870	WINCH ASSY 1135 W/ 35K WINCH	1
113	09004266	U/L BOOM ASSEMBLY (SHORT)	1
114	0908418	KIT-MUDFLAP CENTURY ROTATOR	1
115	0910188	2-STAGE FRONT OUTRIGGER ASY	1
116	0910246	3-STAGE REAR OUTRIGGER ASSY	1
117	0910615	OUTRIGGER CONT VALVE KIT	1
118	0910935	XBAR ASY HRDWR-XHD 5X5 CENT	1
119	0911237	ILLUM LEGEND ASSY RH LWR WLV	1
120	0911324	RH CTL STATION ASSY 5 WINCH W	1
121	0911957	KIT, D-RING PARTS	2
122	0912071	ASSY, 1135 BOOM	1
123	124004464	ALUM HEEL PLATE-14" SDU4&COA	1
124	24773017	HOSE ASSEMBLY 140"LG	2
125	24773018	HOSE ASSEMBLY 140"LG	2
126	9018016	HOSE CLAMP HS-20 1 1/4"	4
127	9024041	SWITCH-ROCKER, LIGHTED 12V	2
128	9041402	1/2 NC X 1 1/4 HHCS PLT GR8	6
129	9041403	1/2 NC X 1 1/2 HHCS PL GR8	1
130	9402970	TOOLBOX MTG. PAD	1
131	942480011	PLATE,SLOT-SS REAR WASHER	2
132	AWS-6821-A	HOSE ASSY-PRESSURE	8
133	FC41	FITTING-90DEG BLKHD ELB W/ NUT	8
134	HC1291	FITTING, 4MJ-4MB STR THR	1

09003709, BASIC UNIT ASSEMBLY, 1135 KNEE BOOM

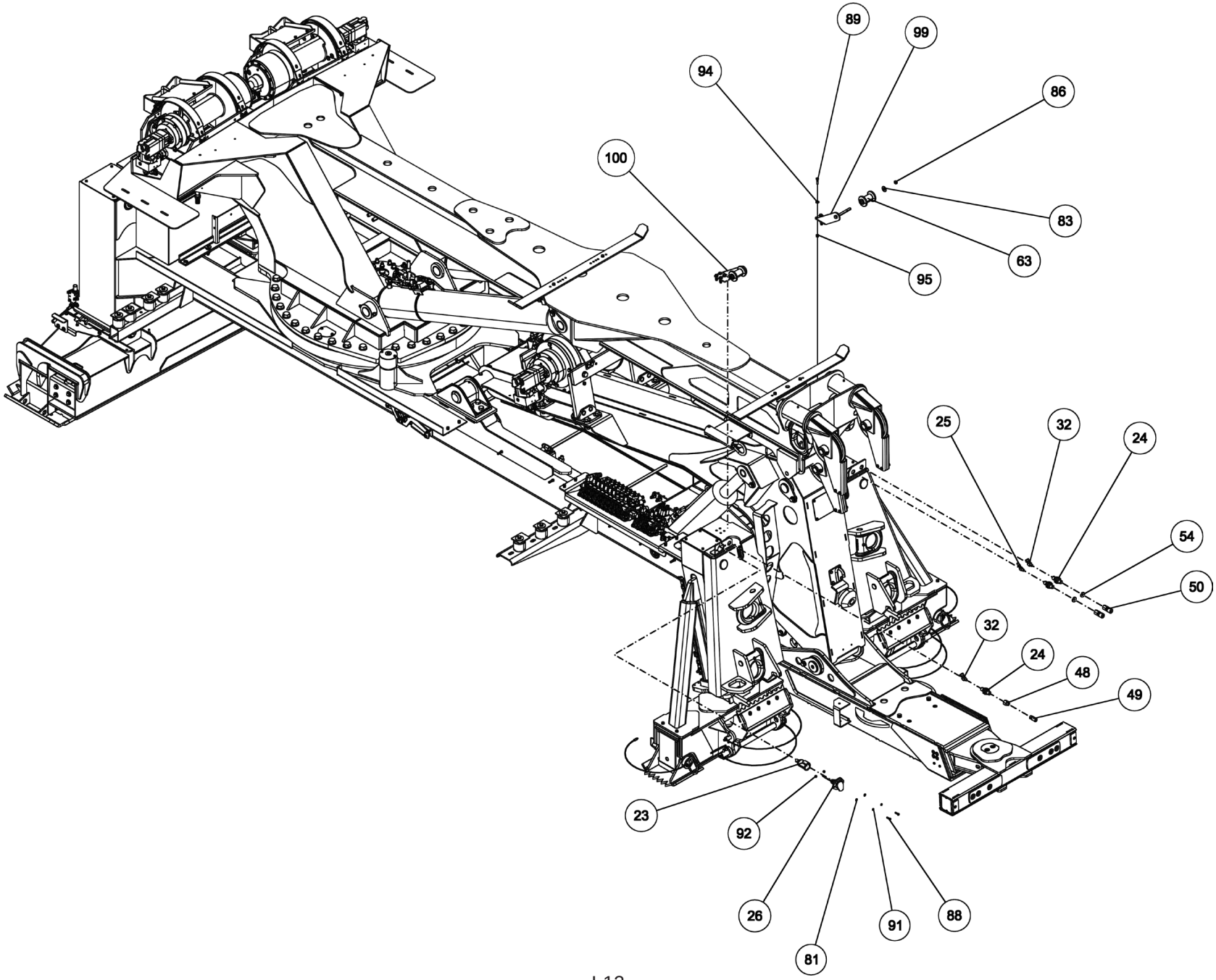

09003709, BASIC UNIT ASSEMBLY, 1135 KNEE BOOM

ITEM	PART NUMBER	DESCRIPTION	QTY
	09003709	BUA, 1135 KNEE BOOM	-
1	0300113	GREASE FITTING, 1/4-28 STR	1
2	03003419	HOSE, HYD 132" LG	1
3	03003420	HOSE, HYD 60" LG	1
4	03003421	HOSE, HYD 18"LG	4
5	03003424	HOSE, HYD 138"	1
6	03003425	HOSE, HYD 90" LG	4
7	03003426	HOSE, HYD 45" LG	6
8	0300364	CLAMP-HOSE,0.875"-2.75" 50"LBS	2
9	0300434	FITTING, HOSE BARB, 2	1
10	0300558	HOSE, SUCTION 2"ID 100R4 (C4)	1
11	0300835	KNOB-BOOM (UP-DOWN)	1
12	0300837	KNOB-BOOM (IN-OUT)	1
13	0300865	FITTING, CONNECTOR 8MJ-8MJ	1
14	0301113	HOSE HYD, 82"	2
15	0301377	FITTING, TEE,3/8" JIC	1
16	0301470	FITTING, 90ELB 6MJ-8MB90	3
17	0301473	HOSE HYD, 18" LG	1
18	0301522	ADAPTER, 6MJ-6MB	1
19	0301529	HOSE HYD, 58	2
20	03015922	STAUFF CLAMP, 3/8 TWIN	4
21	03016142	TUBE, HYD ASSY SF TO O/R	4
22	0301695	HOSE HYD, 91"	1
23	0301909	RECEPTACLE BOOT	1
24	0301946	FITTING, BLKHD CONNECT	3
25	0301947	FITTING, 45 DEG ADAPTER	1
26	0301948	HD 7 WAY TRAILER CONNECT	1
27	0301961	BALL VALVE 2	1
28	0302056	HOSE HYD, 183"	5
29	0302205	GAUGE, FLUSH MNTG-6000 PSI	2
30	0302367	PIPE NIPPLE - 2 X 4	1
31	0302372	HOSE HYD, 240" LG	4
32	0302534	FITTING, 45 DEG ELBOW	2
33	0302604	HOSE HYD, 44"	2
34	0302632	HOSE HYD, 40"	4
35	0302805	HOSE HYD, 10"	1
36	0302813	HOSE HYD, 108" LG	1
37	0302856	KNOB-TILT, 3/8-16 THREAD	1
38	0302881	HOSE HYD, 45"	1
39	0303170	HOSE, HYD. 75"	3
40	0303185	HOSE HYD, 66" LG.	4
41	0303188	HOSE HYD, 75" LG	1
42	0303339	HOSE HYD, 45" LG	1
43	0303340	HOSE HYD, 50" LG	1
44	0303379	KNOB, SWING CW - CCW	1
45	0303380	KNOB-UNDERLIFT (IN-OUT)	1
46	0303381	KNOB - UNDERLIFT (UP-DN)	1
47	0303391	HOSE 8AT2(8FJX-8FJ90) 110"	1
48	0303538	FITT, ADAPTER -BRASS 8FP-6MP	1
49	0303539	QUICK DISCONNECT 3/8 FPT	1
50	0304363	QUICK DISCONNECT 1/2 FPT	2
51	0306537	EMERGENCY SWITCH(RAMSEY)	2
52	0306540	ROTARY SELECT SWITCH OPER	1
53	0306921	PIPE PLUG, 2" SQ HD	1
54	0307052	WASHER, RUBBER 7/16X1 1/4X1/4	2
55	0307151	RUBBER FENDER	3
56	0307472	HOSE, HYD ASSY 24" LG	1
57	0307604	KNOB, RED LONG - SK0700-07	3
58	0310406	VALVE, SHUTTLE LS10-30-8T-N	1
59	0310456	PUSH BUTTN OPER W/MTG N/C	2
60	0310581	HOSE ASSY- 96" 8 fjx-10fjx90	4
61	0310956	TOOLBOX LH AL ROT TRI 2010 W/	1
62	0310957	TOOLBOX RH AL ROT TRI 2010 W/	1
63	0311191	ROLLER, POLY, 4" X 5/8"	2
64	0311417	HOSE, 196" 3/8 2 X STRAIGHT	2
65	0311426	HOSE ASSY, 80" 4FJX-4FJX45	1
66	0311500	LIGHT 6"OVAL REVERSE LED	2
67	0311502	LIGHT 6"OVAL CLEAR-AMBER LED	4
68	0311503	GROMMET, LIGHT 6" OVAL	1
69	0311514	LIGHT 2.5" CLEAR LENS-RED LED	2
70	0311516	GROMMET, LIGHT 2.5" ROUND	2
71	0312309	LIGHT 6" OVAL GLO-LT STT CLR/R	4
72	0313129	HOSE, 1 SUCTION 16C4	3
73	0400005	SCREW, 6-32X1/2 PRH SS	6
74	04000381	SS BHSCS 1/4-20 X 1	1
75	0400066	SCREW, 1/4-20X3/4 HHC GR5	2
76	0400078	SCREW, 1/4-20X2 HHC GR5	2
77	0400367	NUT, 1/4-20 LOK	2
78	0400379	NUT, 5/16-18 SPR J	1
79	0400451	WASHER, 1/4	2
80	0400452	LKWASHER, 1/4	2
81	0400454	WASHER, 1/4 SS	1
82	0400491	LKWASHER, 1/2	2
83	0400492	WASHER, 1/2	2
84	0400497	WASHER, 1/2 GR8	6
85	0400498	WASHER, 1/2X2X0.125	1
86	0400900	NUT, 1/2-13 LOK JAM	2
87	0402020	SCREW, 1/4-20X3/4 HHC SS	2
88	0402021	SCREW, 1/4-20X1 HHC SS	1
89	0402043	SCREW, 3/8-16X1-1/4 HHC SS	8
90	0402094	NUT, HEX 6-32 SS	6
91	0402111	LKWASHER, 1/4 SS	3
92	0402113	NUT, 1/4-20 LOK SS	2
93	0402114	NUT, 1/4-20 LOK REV SS	1
94	0402120	WASHER, 3/8 SS	8
95	0402123	NUT, 3/8-16 LOK SS	8
96	07005922	MOUNT-HYD GAUGE	1
97	0712230	BOSS, TURNTABLE LOCK	1
98	0806994	HOUSE LOCK INDICATOR WELD	1
99	0810433	HHU CHAIN ROLLER BRACKET, LH	1
100	0810434	HHU CHAIN ROLLER BRACKET, RH	1
101	09000097	ILLUMINATED LEGEND ASSY-LT UP	1
102	09000135	ILLUMINATED LEGEND ASSY-RT UP	1
103	09001440	50K DRAG WINCH ASSY	1
104	09002243	VALVE ASSY, 1150 KNEE MAIN	1
105	09002244	VALVE ASSY, 1150 KNEE BOOM U/L	1
106	09002246	VALVE ASSY, PRESSURE REDUC	1
107	09002247	CONTROL ASSY, 11 HANDLE WV	1
108	09002910	PUMP KIT, 4K KNEE BOOM	1
109	09002949	ILLUM LEGEND LT 1150 KNEE	1
110	09003710	SUBFRAME ASSY, 1135 KNEE	1
111	09003733	WRECKER FRAME ASSY 1135	1
112	09003870	WINCH ASSY 1135 W/ 35K WINCH	1
113	09004266	U/L BOOM ASSEMBLY (SHORT)	1
114	0908418	KIT-MUDFLAP CENTURY ROTATOR	1
115	0910188	2-STAGE FRONT OUTRIGGER ASY	1
116	0910246	3-STAGE REAR OUTRIGGER ASSY	1
117	0910615	OUTRIGGER CONT VALVE KIT	1
118	0910935	XBAR ASY HRDWR-XHD 5X5 CENT	1
119	0911237	ILLUM LEGEND ASSY RH LWR WLV	1
120	0911324	RH CTL STATION ASSY 5 WINCH W	1
121	0911957	KIT, D-RING PARTS	2
122	0912071	ASSY, 1135 BOOM	1
123	124004464	ALUM HEEL PLATE-14" SDU4&COA	1
124	24773017	HOSE ASSEMBLY 140"LG	2
125	24773018	HOSE ASSEMBLY 140"LG	2
126	9018016	HOSE CLAMP HS-20 1 1/4"	4
127	9024041	SWITCH-ROCKER, LIGHTED 12V	2
128	9041402	1/2 NC X 1 1/4 HHCS PLT GR8	6
129	9041403	1/2 NC X 1 1/2 HHCS PL GR8	1
130	9402970	TOOLBOX MTG. PAD	1
131	942480011	PLATE,SLOT-SS REAR WASHER	2
132	AWS-6821-A	HOSE ASSY-PRESSURE	8
133	FC41	FITTING-90DEG BLKHD ELB W/ NUT	8
134	HC1291	FITTING, 4MJ-4MB STR THR	1

09003709, BASIC UNIT ASSEMBLY, 1135 KNEE BOOM

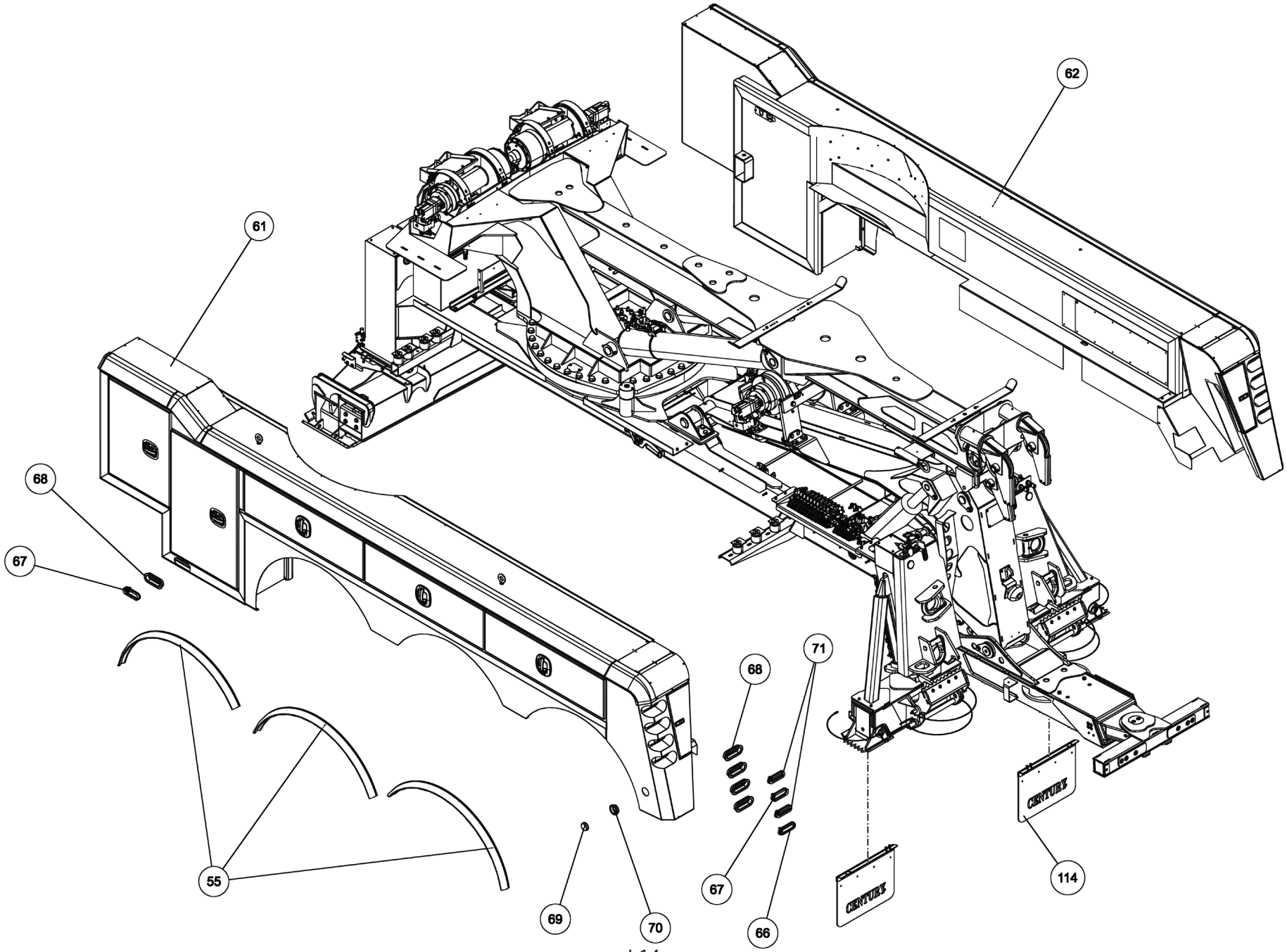

09003709, BASIC UNIT ASSEMBLY, 1135 KNEE BOOM

ITEM	PART NUMBER	DESCRIPTION	QTY
	09003709	BUA, 1135 KNEE BOOM	-
1	0300113	GREASE FITTING, 1/4-28 STR	1
2	03003419	HOSE, HYD 132" LG	1
3	03003420	HOSE, HYD 60" LG	1
4	03003421	HOSE, HYD 18"LG	4
5	03003424	HOSE, HYD 138"	1
6	03003425	HOSE, HYD 90" LG	4
7	03003426	HOSE, HYD 45" LG	6
8	0300364	CLAMP-HOSE,0.875"-2.75" 50"LBS	2
9	0300434	FITTING, HOSE BARB, 2	1
10	0300558	HOSE, SUCTION 2"ID 100R4 (C4)	1
11	0300835	KNOB-BOOM (UP-DOWN)	1
12	0300837	KNOB-BOOM (IN-OUT)	1
13	0300865	FITTING, CONNECTOR 8MJ-8MJ	1
14	0301113	HOSE HYD, 82"	2
15	0301377	FITTING, TEE,3/8" JIC	1
16	0301470	FITTING, 90ELB 6MJ-8MB90	3
17	0301473	HOSE HYD, 18" LG	1
18	0301522	ADAPTER, 6MJ-6MB	1
19	0301529	HOSE HYD, 58	2
20	03015922	STAUFF CLAMP, 3/8 TWIN	4
21	03016142	TUBE, HYD ASSY SF TO O/R	4
22	0301695	HOSE HYD, 91"	1
23	0301909	RECEPTACLE BOOT	1
24	0301946	FITTING, BLKHD CONNECT	3
25	0301947	FITTING, 45 DEG ADAPTER	1
26	0301948	HD 7 WAY TRAILER CONNECT	1
27	0301961	BALL VALVE 2	1
28	0302056	HOSE HYD, 183"	5
29	0302205	GAUGE, FLUSH MNTG-6000 PSI	2
30	0302367	PIPE NIPPLE - 2 X 4	1
31	0302372	HOSE HYD, 240" LG	4
32	0302534	FITTING, 45 DEG ELBOW	2
33	0302604	HOSE HYD, 44"	2
34	0302632	HOSE HYD, 40"	4
35	0302805	HOSE HYD, 10"	1
36	0302813	HOSE HYD, 108" LG	1
37	0302856	KNOB-TILT, 3/8-16 THREAD	1
38	0302881	HOSE HYD, 45"	1
39	0303170	HOSE, HYD. 75"	3
40	0303185	HOSE HYD, 66" LG.	4
41	0303188	HOSE HYD, 75" LG	1
42	0303339	HOSE HYD, 45" LG	1
43	0303340	HOSE HYD, 50" LG	1
44	0303379	KNOB, SWING CW - CCW	1
45	0303380	KNOB-UNDERLIFT (IN-OUT)	1

ITEM	PART NUMBER	DESCRIPTION	QTY
46	0303381	KNOB - UNDERLIFT (UP-DN)	1
47	0303391	HOSE 8AT2(8FJX-8FJ90) 110"	1
48	0303538	FITT, ADAPTER -BRASS 8FP-6MP	1
49	0303539	QUICK DISCONNECT 3/8 FPT	1
50	0304363	QUICK DISCONNECT 1/2 FPT	2
51	0306537	EMERGENCY SWITCH(RAMSEY)	2
52	0306540	ROTARY SELECT SWITCH OPER	1
53	0306921	PIPE PLUG, 2" SQ HD	1
54	0307052	WASHER, RUBBER 7/16X1 1/4X1/4	2
55	0307151	RUBBER FENDER	3
56	0307472	HOSE, HYD ASSY 24" LG	1
57	0307604	KNOB, RED LONG - SK0700-07	3
58	0310406	VALVE, SHUTTLE LS10-30-8T-N	1
59	0310456	PUSH BUTTN OPER W/MTG N/C	2
60	0310581	HOSE ASSY- 96" 8 fjx-10fjx90	4
61	0310956	TOOLBOX LH AL ROT TRI 2010 W/	1
62	0310957	TOOLBOX RH AL ROT TRI 2010 W/	1
63	0311191	ROLLER, POLY, 4" X 5/8"	2
64	0311417	HOSE, 196" 3/8 2 X STRAIGHT	2
65	0311426	HOSE ASSY, 80" 4FJX-4FJX45	1
66	0311500	LIGHT 6"OVAL REVERSE LED	2
67	0311502	LIGHT 6"OVAL CLEAR-AMBER LED	4
68	0311503	GROMMET, LIGHT 6" OVAL	1
69	0311514	LIGHT 2.5" CLEAR LENS-RED LED	2
70	0311516	GROMMET, LIGHT 2.5" ROUND	2
71	0312309	LIGHT 6" OVAL GLO-LT STT CLR/R	4
72	0313129	HOSE, 1 SUCTION 16C4	3
73	0400005	SCREW, 6-32X1/2 PRH SS	6
74	04000381	SS BHSCS 1/4-20 X 1	1
75	0400066	SCREW, 1/4-20X3/4 HHC GR5	2
76	0400078	SCREW, 1/4-20X2 HHC GR5	2
77	0400367	NUT, 1/4-20 LOK	2
78	0400379	NUT, 5/16-18 SPR J	1
79	0400451	WASHER, 1/4	2
80	0400452	LKWASHER, 1/4	2
81	0400454	WASHER, 1/4 SS	1
82	0400491	LKWASHER, 1/2	2
83	0400492	WASHER, 1/2	2
84	0400497	WASHER, 1/2 GR8	6
85	0400498	WASHER, 1/2X2X0.125	1
86	0400900	NUT, 1/2-13 LOK JAM	2
87	0402020	SCREW, 1/4-20X3/4 HHC SS	2
88	0402021	SCREW, 1/4-20X1 HHC SS	1
89	0402043	SCREW, 3/8-16X1-1/4 HHC SS	8
90	0402094	NUT, HEX 6-32 SS	6
91	0402111	LKWASHER, 1/4 SS	3

ITEM	PART NUMBER	DESCRIPTION	QTY
92	0402113	NUT, 1/4-20 LOK SS	2
93	0402114	NUT, 1/4-20 LOK REV SS	1
94	0402120	WASHER, 3/8 SS	8
95	0402123	NUT, 3/8-16 LOK SS	8
96	07005922	MOUNT-HYD GAUGE	1
97	0712230	BOSS, TURNTABLE LOCK	1
98	0806994	HOUSE LOCK INDICATOR WELD	1
99	0810433	HHU CHAIN ROLLER BRACKET, LH	1
100	0810434	HHU CHAIN ROLLER BRACKET, RH	1
101	09000097	ILLUMINATED LEGEND ASSY-LT UP	1
102	09000135	ILLUMINATED LEGEND ASSY-RT UP	1
103	09001440	50K DRAG WINCH ASSY	1
104	09002243	VALVE ASSY, 1150 KNEE MAIN	1
105	09002244	VALVE ASSY, 1150 KNEE BOOM U/L	1
106	09002246	VALVE ASSY, PRESSURE REDUC	1
107	09002247	CONTROL ASSY, 11 HANDLE WV	1
108	09002910	PUMP KIT, 4K KNEE BOOM	1
109	09002949	ILLUM LEGEND LT 1150 KNEE	1
110	09003710	SUBFRAME ASSY, 1135 KNEE	1
111	09003733	WRECKER FRAME ASSY 1135	1
112	09003870	WINCH ASSY 1135 W/ 35K WINCH	1
113	09004266	U/L BOOM ASSEMBLY (SHORT)	1
114	0908418	KIT-MUDFLAP CENTURY ROTATOR	1
115	0910188	2-STAGE FRONT OUTRIGGER ASY	1
116	0910246	3-STAGE REAR OUTRIGGER ASSY	1
117	0910615	OUTRIGGER CONT VALVE KIT	1
118	0910935	XBAR ASY HRDWR-XHD 5X5 CENT	1
119	0911237	ILLUM LEGEND ASSY RH LWR WLV	1
120	0911324	RH CTL STATION ASSY 5 WINCH W	1
121	0911957	KIT, D-RING PARTS	2
122	0912071	ASSY, 1135 BOOM	1
123	124004464	ALUM HEEL PLATE-14" SDU4&COA	1
124	24773017	HOSE ASSEMBLY 140"LG	2
125	24773018	HOSE ASSEMBLY 140"LG	2
126	9018016	HOSE CLAMP HS-20 1 1/4"	4
127	9024041	SWITCH-ROCKER, LIGHTED 12V	2
128	9041402	1/2 NC X 1 1/4 HHCS PLT GR8	6
129	9041403	1/2 NC X 1 1/2 HHCS PL GR8	1
130	9402970	TOOLBOX MTG. PAD	1
131	942480011	PLATE,SLOT-SS REAR WASHER	2
132	AWS-6821-A	HOSE ASSY-PRESSURE	8
133	FC41	FITTING-90DEG BLKHD ELB W/ NUT	8
134	HC1291	FITTING, 4MJ-4MB STR THR	1

09003709, BASIC UNIT ASSEMBLY, 1135 KNEE BOOM

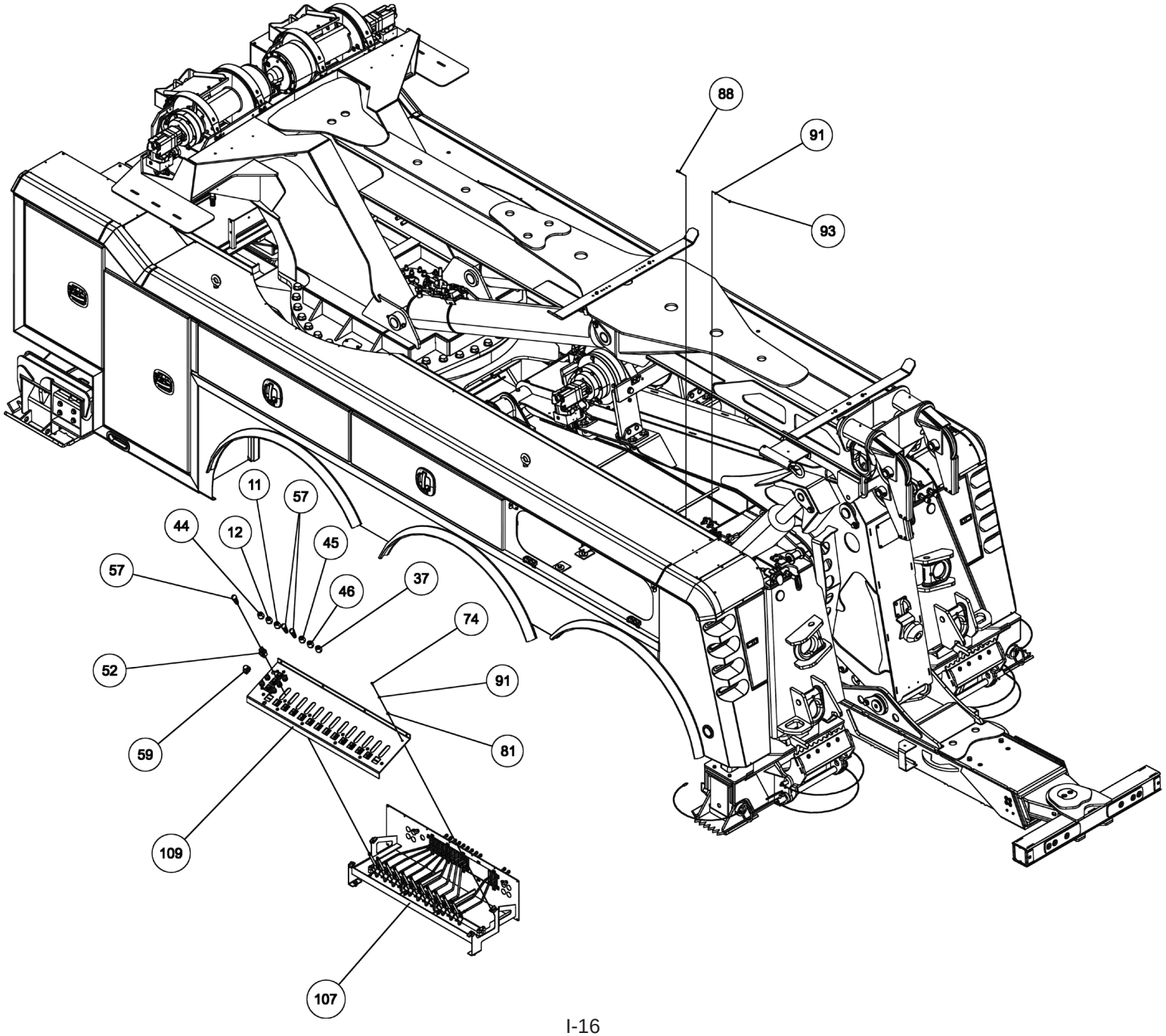

09003709, BASIC UNIT ASSEMBLY, 1135 KNEE BOOM

ITEM	PART NUMBER	DESCRIPTION	QTY
	09003709	BUA, 1135 KNEE BOOM	-
1	0300113	GREASE FITTING, 1/4-28 STR	1
2	03003419	HOSE, HYD 132" LG	1
3	03003420	HOSE, HYD 60" LG	1
4	03003421	HOSE, HYD 18"LG	4
5	03003424	HOSE, HYD 138"	1
6	03003425	HOSE, HYD 90" LG	4
7	03003426	HOSE, HYD 45" LG	6
8	0300364	CLAMP-HOSE,0.875"-2.75" 50"LBS	2
9	0300434	FITTING, HOSE BARB, 2	1
10	0300558	HOSE, SUCTION 2"ID 100R4 (C4)	1
11	0300835	KNOB-BOOM (UP-DOWN)	1
12	0300837	KNOB-BOOM (IN-OUT)	1
13	0300865	FITTING, CONNECTOR 8MJ-8MJ	1
14	0301113	HOSE HYD, 82"	2
15	0301377	FITTING, TEE,3/8" JIC	1
16	0301470	FITTING, 90ELB 6MJ-8MB90	3
17	0301473	HOSE HYD, 18" LG	1
18	0301522	ADAPTER, 6MJ-6MB	1
19	0301529	HOSE HYD, 58	2
20	03015922	STAUFF CLAMP, 3/8 TWIN	4
21	03016142	TUBE, HYD ASSY SF TO O/R	4
22	0301695	HOSE HYD, 91"	1
23	0301909	RECEPTACLE BOOT	1
24	0301946	FITTING, BLKHD CONNECT	3
25	0301947	FITTING, 45 DEG ADAPTER	1
26	0301948	HD 7 WAY TRAILER CONNECT	1
27	0301961	BALL VALVE 2	1
28	0302056	HOSE HYD, 183"	5
29	0302205	GAUGE, FLUSH MNTG-6000 PSI	2
30	0302367	PIPE NIPPLE - 2 X 4	1
31	0302372	HOSE HYD, 240" LG	4
32	0302534	FITTING, 45 DEG ELBOW	2
33	0302604	HOSE HYD, 44"	2
34	0302632	HOSE HYD, 40"	4
35	0302805	HOSE HYD, 10"	1
36	0302813	HOSE HYD, 108" LG	1
37	0302856	KNOB-TILT, 3/8-16 THREAD	1
38	0302881	HOSE HYD, 45"	1
39	0303170	HOSE, HYD. 75"	3
40	0303185	HOSE HYD, 66" LG.	4
41	0303188	HOSE HYD, 75" LG	1
42	0303339	HOSE HYD, 45" LG	1
43	0303340	HOSE HYD, 50" LG	1
44	0303379	KNOB, SWING CW - CCW	1
45	0303380	KNOB-UNDERLIFT (IN-OUT)	1

ITEM	PART NUMBER	DESCRIPTION	QTY
46	0303381	KNOB - UNDERLIFT (UP-DN)	1
47	0303391	HOSE 8AT2(8FJX-8FJ90) 110"	1
48	0303538	FITT, ADAPTER -BRASS 8FP-6MP	1
49	0303539	QUICK DISCONNECT 3/8 FPT	1
50	0304363	QUICK DISCONNECT 1/2 FPT	2
51	0306537	EMERGENCY SWITCH(RAMSEY)	2
52	0306540	ROTARY SELECT SWITCH OPER	1
53	0306921	PIPE PLUG, 2" SQ HD	1
54	0307052	WASHER, RUBBER 7/16X1 1/4X1/4	2
55	0307151	RUBBER FENDER	3
56	0307472	HOSE, HYD ASSY 24" LG	1
57	0307604	KNOB, RED LONG - SK0700-07	3
58	0310406	VALVE, SHUTTLE LS10-30-8T-N	1
59	0310456	PUSH BUTTN OPER W/MTG N/C	2
60	0310581	HOSE ASSY- 96" 8 fjx-10fjx90	4
61	0310956	TOOLBOX LH AL ROT TRI 2010 W/	1
62	0310957	TOOLBOX RH AL ROT TRI 2010 W/	1
63	0311191	ROLLER, POLY, 4" X 5/8"	2
64	0311417	HOSE, 196" 3/8 2 X STRAIGHT	2
65	0311426	HOSE ASSY, 80" 4FJX-4FJX45	1
66	0311500	LIGHT 6"OVAL REVERSE LED	2
67	0311502	LIGHT 6"OVAL CLEAR-AMBER LED	4
68	0311503	GROMMET, LIGHT 6" OVAL	1
69	0311514	LIGHT 2.5" CLEAR LENS-RED LED	2
70	0311516	GROMMET, LIGHT 2.5" ROUND	2
71	0312309	LIGHT 6" OVAL GLO-LT STT CLR/R	4
72	0313129	HOSE, 1 SUCTION 16C4	3
73	0400005	SCREW, 6-32X1/2 PRH SS	6
74	04000381	SS BHSCS 1/4-20 X 1	1
75	0400066	SCREW, 1/4-20X3/4 HHC GR5	2
76	0400078	SCREW, 1/4-20X2 HHC GR5	2
77	0400367	NUT, 1/4-20 LOK	2
78	0400379	NUT, 5/16-18 SPR J	1
79	0400451	WASHER, 1/4	2
80	0400452	LKWASHER, 1/4	2
81	0400454	WASHER, 1/4 SS	1
82	0400491	LKWASHER, 1/2	2
83	0400492	WASHER, 1/2	2
84	0400497	WASHER, 1/2 GR8	6
85	0400498	WASHER, 1/2X2X0.125	1
86	0400900	NUT, 1/2-13 LOK JAM	2
87	0402020	SCREW, 1/4-20X3/4 HHC SS	2
88	0402021	SCREW, 1/4-20X1 HHC SS	1
89	0402043	SCREW, 3/8-16X1-1/4 HHC SS	8
90	0402094	NUT, HEX 6-32 SS	6
91	0402111	LKWASHER, 1/4 SS	3

ITEM	PART NUMBER	DESCRIPTION	QTY
92	0402113	NUT, 1/4-20 LOK SS	2
93	0402114	NUT, 1/4-20 LOK REV SS	1
94	0402120	WASHER, 3/8 SS	8
95	0402123	NUT, 3/8-16 LOK SS	8
96	07005922	MOUNT-HYD GAUGE	1
97	0712230	BOSS, TURNTABLE LOCK	1
98	0806994	HOUSE LOCK INDICATOR WELD	1
99	0810433	HHU CHAIN ROLLER BRACKET, LH	1
100	0810434	HHU CHAIN ROLLER BRACKET, RH	1
101	09000097	ILLUMINATED LEGEND ASSY-LT UP	1
102	09000135	ILLUMINATED LEGEND ASSY-RT UP	1
103	09001440	50K DRAG WINCH ASSY	1
104	09002243	VALVE ASSY, 1150 KNEE MAIN	1
105	09002244	VALVE ASSY, 1150 KNEE BOOM U/L	1
106	09002246	VALVE ASSY, PRESSURE REDUC	1
107	09002247	CONTROL ASSY, 11 HANDLE WV	1
108	09002910	PUMP KIT, 4K KNEE BOOM	1
109	09002949	ILLUM LEGEND LT 1150 KNEE	1
110	09003710	SUBFRAME ASSY, 1135 KNEE	1
111	09003733	WRECKER FRAME ASSY 1135	1
112	09003870	WINCH ASSY 1135 W/ 35K WINCH	1
113	09004266	U/L BOOM ASSEMBLY (SHORT)	1
114	0908418	KIT-MUDFLAP CENTURY ROTATOR	1
115	0910188	2-STAGE FRONT OUTRIGGER ASY	1
116	0910246	3-STAGE REAR OUTRIGGER ASSY	1
117	0910615	OUTRIGGER CONT VALVE KIT	1
118	0910935	XBAR ASY HRDWR-XHD 5X5 CENT	1
119	0911237	ILLUM LEGEND ASSY RH LWR WLV	1
120	0911324	RH CTL STATION ASSY 5 WINCH W	1
121	0911957	KIT, D-RING PARTS	2
122	0912071	ASSY, 1135 BOOM	1
123	124004464	ALUM HEEL PLATE-14" SDU4&COA	1
124	24773017	HOSE ASSEMBLY 140"LG	2
125	24773018	HOSE ASSEMBLY 140"LG	2
126	9018016	HOSE CLAMP HS-20 1 1/4"	4
127	9024041	SWITCH-ROCKER, LIGHTED 12V	2
128	9041402	1/2 NC X 1 1/4 HHCS PLT GR8	6
129	9041403	1/2 NC X 1 1/2 HHCS PL GR8	1
130	9402970	TOOLBOX MTG. PAD	1
131	942480011	PLATE,SLOT-SS REAR WASHER	2
132	AWS-6821-A	HOSE ASSY-PRESSURE	8
133	FC41	FITTING-90DEG BLKHD ELB W/ NUT	8
134	HC1291	FITTING, 4MJ-4MB STR THR	1

09003709, BASIC UNIT ASSEMBLY, 1135 KNEE BOOM

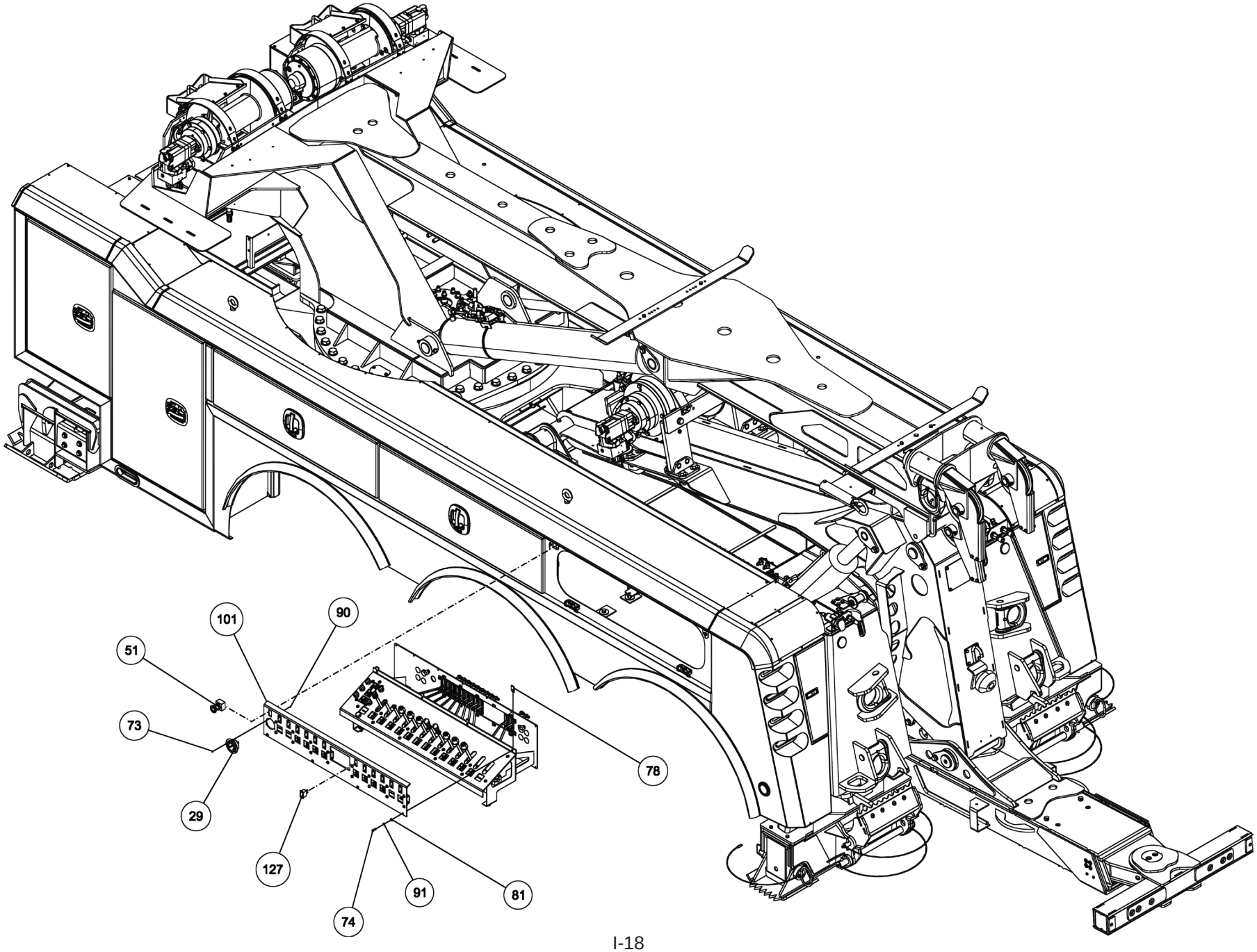

09003709, BASIC UNIT ASSEMBLY, 1135 KNEE BOOM

ITEM	PART NUMBER	DESCRIPTION	QTY
	09003709	BUA, 1135 KNEE BOOM	-
1	0300113	GREASE FITTING, 1/4-28 STR	1
2	03003419	HOSE, HYD 132" LG	1
3	03003420	HOSE, HYD 60" LG	1
4	03003421	HOSE, HYD 18"LG	4
5	03003424	HOSE, HYD 138"	1
6	03003425	HOSE, HYD 90" LG	4
7	03003426	HOSE, HYD 45" LG	6
8	0300364	CLAMP-HOSE,0.875"-2.75" 50"LBS	2
9	0300434	FITTING, HOSE BARB, 2	1
10	0300558	HOSE, SUCTION 2"ID 100R4 (C4)	1
11	0300835	KNOB-BOOM (UP-DOWN)	1
12	0300837	KNOB-BOOM (IN-OUT)	1
13	0300865	FITTING, CONNECTOR 8MJ-8MJ	1
14	0301113	HOSE HYD, 82"	2
15	0301377	FITTING, TEE,3/8" JIC	1
16	0301470	FITTING, 90ELB 6MJ-8MB90	3
17	0301473	HOSE HYD, 18" LG	1
18	0301522	ADAPTER, 6MJ-6MB	1
19	0301529	HOSE HYD, 58	2
20	03015922	STAUFF CLAMP, 3/8 TWIN	4
21	03016142	TUBE, HYD ASSY SF TO O/R	4
22	0301695	HOSE HYD, 91"	1
23	0301909	RECEPTACLE BOOT	1
24	0301946	FITTING, BLKHD CONNECT	3
25	0301947	FITTING, 45 DEG ADAPTER	1
26	0301948	HD 7 WAY TRAILER CONNECT	1
27	0301961	BALL VALVE 2	1
28	0302056	HOSE HYD, 183"	5
29	0302205	GAUGE, FLUSH MNTG-6000 PSI	2
30	0302367	PIPE NIPPLE - 2 X 4	1
31	0302372	HOSE HYD, 240" LG	4
32	0302534	FITTING, 45 DEG ELBOW	2
33	0302604	HOSE HYD, 44"	2
34	0302632	HOSE HYD, 40"	4
35	0302805	HOSE HYD, 10"	1
36	0302813	HOSE HYD, 108" LG	1
37	0302856	KNOB-TILT, 3/8-16 THREAD	1
38	0302881	HOSE HYD, 45"	1
39	0303170	HOSE, HYD. 75"	3
40	0303185	HOSE HYD, 66" LG.	4
41	0303188	HOSE HYD, 75" LG	1
42	0303339	HOSE HYD, 45" LG	1
43	0303340	HOSE HYD, 50" LG	1
44	0303379	KNOB, SWING CW - CCW	1
45	0303380	KNOB-UNDERLIFT (IN-OUT)	1

ITEM	PART NUMBER	DESCRIPTION	QTY
46	0303381	KNOB - UNDERLIFT (UP-DN)	1
47	0303391	HOSE 8AT2(8FJX-8FJ90) 110"	1
48	0303538	FITT, ADAPTER -BRASS 8FP-6MP	1
49	0303539	QUICK DISCONNECT 3/8 FPT	1
50	0304363	QUICK DISCONNECT 1/2 FPT	2
51	0306537	EMERGENCY SWITCH(RAMSEY)	2
52	0306540	ROTARY SELECT SWITCH OPER	1
53	0306921	PIPE PLUG, 2" SQ HD	1
54	0307052	WASHER, RUBBER 7/16X1 1/4X1/4	2
55	0307151	RUBBER FENDER	3
56	0307472	HOSE, HYD ASSY 24" LG	1
57	0307604	KNOB, RED LONG - SK0700-07	3
58	0310406	VALVE, SHUTTLE LS10-30-8T-N	1
59	0310456	PUSH BUTTN OPER W/MTG N/C	2
60	0310581	HOSE ASSY- 96" 8 fjx-10fjx90	4
61	0310956	TOOLBOX LH AL ROT TRI 2010 W/	1
62	0310957	TOOLBOX RH AL ROT TRI 2010 W/	1
63	0311191	ROLLER, POLY, 4" X 5/8"	2
64	0311417	HOSE, 196" 3/8 2 X STRAIGHT	2
65	0311426	HOSE ASSY, 80" 4FJX-4FJX45	1
66	0311500	LIGHT 6"OVAL REVERSE LED	2
67	0311502	LIGHT 6"OVAL CLEAR-AMBER LED	4
68	0311503	GROMMET, LIGHT 6" OVAL	1
69	0311514	LIGHT 2.5" CLEAR LENS-RED LED	2
70	0311516	GROMMET, LIGHT 2.5" ROUND	2
71	0312309	LIGHT 6" OVAL GLO-LT STT CLR/R	4
72	0313129	HOSE, 1 SUCTION 16C4	3
73	0400005	SCREW, 6-32X1/2 PRH SS	6
74	04000381	SS BHSCS 1/4-20 X 1	1
75	0400066	SCREW, 1/4-20X3/4 HHC GR5	2
76	0400078	SCREW, 1/4-20X2 HHC GR5	2
77	0400367	NUT, 1/4-20 LOK	2
78	0400379	NUT, 5/16-18 SPR J	1
79	0400451	WASHER, 1/4	2
80	0400452	LKWASHER, 1/4	2
81	0400454	WASHER, 1/4 SS	1
82	0400491	LKWASHER, 1/2	2
83	0400492	WASHER, 1/2	2
84	0400497	WASHER, 1/2 GR8	6
85	0400498	WASHER, 1/2X2X0.125	1
86	0400900	NUT, 1/2-13 LOK JAM	2
87	0402020	SCREW, 1/4-20X3/4 HHC SS	2
88	0402021	SCREW, 1/4-20X1 HHC SS	1
89	0402043	SCREW, 3/8-16X1-1/4 HHC SS	8
90	0402094	NUT, HEX 6-32 SS	6
91	0402111	LKWASHER, 1/4 SS	3

ITEM	PART NUMBER	DESCRIPTION	QTY
92	0402113	NUT, 1/4-20 LOK SS	2
93	0402114	NUT, 1/4-20 LOK REV SS	1
94	0402120	WASHER, 3/8 SS	8
95	0402123	NUT, 3/8-16 LOK SS	8
96	07005922	MOUNT-HYD GAUGE	1
97	0712230	BOSS, TURNTABLE LOCK	1
98	0806994	HOUSE LOCK INDICATOR WELD	1
99	0810433	HHU CHAIN ROLLER BRACKET, LH	1
100	0810434	HHU CHAIN ROLLER BRACKET, RH	1
101	09000097	ILLUMINATED LEGEND ASSY-LT UP	1
102	09000135	ILLUMINATED LEGEND ASSY-RT UP	1
103	09001440	50K DRAG WINCH ASSY	1
104	09002243	VALVE ASSY, 1150 KNEE MAIN	1
105	09002244	VALVE ASSY, 1150 KNEE BOOM U/L	1
106	09002246	VALVE ASSY, PRESSURE REDUC	1
107	09002247	CONTROL ASSY, 11 HANDLE WV	1
108	09002910	PUMP KIT, 4K KNEE BOOM	1
109	09002949	ILLUM LEGEND LT 1150 KNEE	1
110	09003710	SUBFRAME ASSY, 1135 KNEE	1
111	09003733	WRECKER FRAME ASSY 1135	1
112	09003870	WINCH ASSY 1135 W/ 35K WINCH	1
113	09004266	U/L BOOM ASSEMBLY (SHORT)	1
114	0908418	KIT-MUDFLAP CENTURY ROTATOR	1
115	0910188	2-STAGE FRONT OUTRIGGER ASY	1
116	0910246	3-STAGE REAR OUTRIGGER ASSY	1
117	0910615	OUTRIGGER CONT VALVE KIT	1
118	0910935	XBAR ASY HRDWR-XHD 5X5 CENT	1
119	0911237	ILLUM LEGEND ASSY RH LWR WLV	1
120	0911324	RH CTL STATION ASSY 5 WINCH W	1
121	0911957	KIT, D-RING PARTS	2
122	0912071	ASSY, 1135 BOOM	1
123	124004464	ALUM HEEL PLATE-14" SDU4&COA	1
124	24773017	HOSE ASSEMBLY 140"LG	2
125	24773018	HOSE ASSEMBLY 140"LG	2
126	9018016	HOSE CLAMP HS-20 1 1/4"	4
127	9024041	SWITCH-ROCKER, LIGHTED 12V	2
128	9041402	1/2 NC X 1 1/4 HHCS PLT GR8	6
129	9041403	1/2 NC X 1 1/2 HHCS PL GR8	1
130	9402970	TOOLBOX MTG. PAD	1
131	942480011	PLATE,SLOT-SS REAR WASHER	2
132	AWS-6821-A	HOSE ASSY-PRESSURE	8
133	FC41	FITTING-90DEG BLKHD ELB W/ NUT	8
134	HC1291	FITTING, 4MJ-4MB STR THR	1

09003709, BASIC UNIT ASSEMBLY, 1135 KNEE BOOM

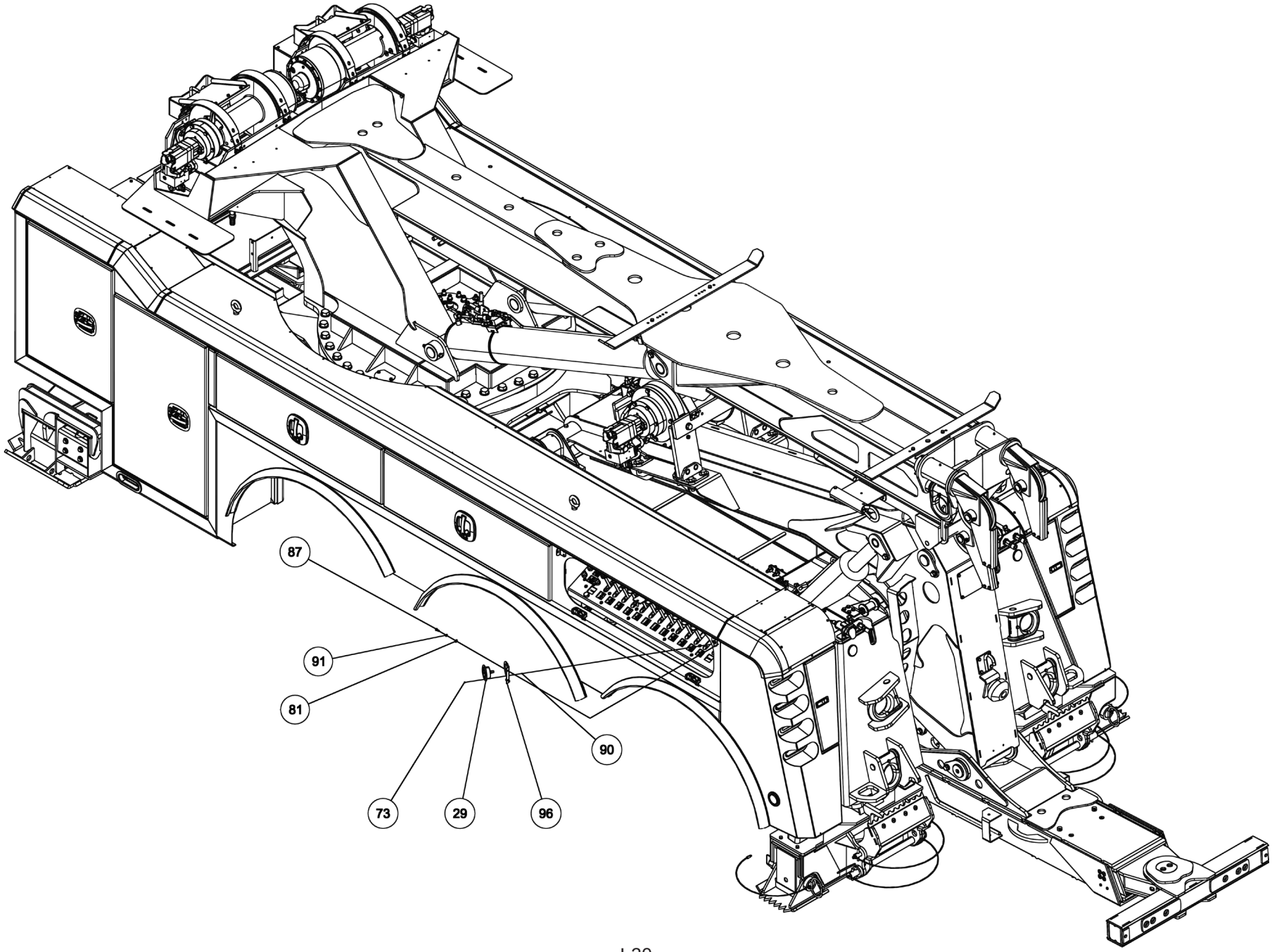

09003709, BASIC UNIT ASSEMBLY, 1135 KNEE BOOM

ITEM	PART NUMBER	DESCRIPTION	QTY
	09003709	BUA, 1135 KNEE BOOM	-
1	0300113	GREASE FITTING, 1/4-28 STR	1
2	03003419	HOSE, HYD 132" LG	1
3	03003420	HOSE, HYD 60" LG	1
4	03003421	HOSE, HYD 18"LG	4
5	03003424	HOSE, HYD 138"	1
6	03003425	HOSE, HYD 90" LG	4
7	03003426	HOSE, HYD 45" LG	6
8	0300364	CLAMP-HOSE,0.875"-2.75" 50"LBS	2
9	0300434	FITTING, HOSE BARB, 2	1
10	0300558	HOSE, SUCTION 2"ID 100R4 (C4)	1
11	0300835	KNOB-BOOM (UP-DOWN)	1
12	0300837	KNOB-BOOM (IN-OUT)	1
13	0300865	FITTING, CONNECTOR 8MJ-8MJ	1
14	0301113	HOSE HYD, 82"	2
15	0301377	FITTING, TEE,3/8" JIC	1
16	0301470	FITTING, 90ELB 6MJ-8MB90	3
17	0301473	HOSE HYD, 18" LG	1
18	0301522	ADAPTER, 6MJ-6MB	1
19	0301529	HOSE HYD, 58	2
20	03015922	STAUFF CLAMP, 3/8 TWIN	4
21	03016142	TUBE, HYD ASSY SF TO O/R	4
22	0301695	HOSE HYD, 91"	1
23	0301909	RECEPTACLE BOOT	1
24	0301946	FITTING, BLKHD CONNECT	3
25	0301947	FITTING, 45 DEG ADAPTER	1
26	0301948	HD 7 WAY TRAILER CONNECT	1
27	0301961	BALL VALVE 2	1
28	0302056	HOSE HYD, 183"	5
29	0302205	GAUGE, FLUSH MNTG-6000 PSI	2
30	0302367	PIPE NIPPLE - 2 X 4	1
31	0302372	HOSE HYD, 240" LG	4
32	0302534	FITTING, 45 DEG ELBOW	2
33	0302604	HOSE HYD, 44"	2
34	0302632	HOSE HYD, 40"	4
35	0302805	HOSE HYD, 10"	1
36	0302813	HOSE HYD, 108" LG	1
37	0302856	KNOB-TILT, 3/8-16 THREAD	1
38	0302881	HOSE HYD, 45"	1
39	0303170	HOSE, HYD. 75"	3
40	0303185	HOSE HYD, 66" LG.	4
41	0303188	HOSE HYD, 75" LG	1
42	0303339	HOSE HYD, 45" LG	1
43	0303340	HOSE HYD, 50" LG	1
44	0303379	KNOB, SWING CW - CCW	1
45	0303380	KNOB-UNDERLIFT (IN-OUT)	1

ITEM	PART NUMBER	DESCRIPTION	QTY
46	0303381	KNOB - UNDERLIFT (UP-DN)	1
47	0303391	HOSE 8AT2(8FJX-8FJ90) 110"	1
48	0303538	FITT, ADAPTER -BRASS 8FP-6MP	1
49	0303539	QUICK DISCONNECT 3/8 FPT	1
50	0304363	QUICK DISCONNECT 1/2 FPT	2
51	0306537	EMERGENCY SWITCH(RAMSEY)	2
52	0306540	ROTARY SELECT SWITCH OPER	1
53	0306921	PIPE PLUG, 2" SQ HD	1
54	0307052	WASHER, RUBBER 7/16X1 1/4X1/4	2
55	0307151	RUBBER FENDER	3
56	0307472	HOSE, HYD ASSY 24" LG	1
57	0307604	KNOB, RED LONG - SK0700-07	3
58	0310406	VALVE, SHUTTLE LS10-30-8T-N	1
59	0310456	PUSH BUTTN OPER W/MTG N/C	2
60	0310581	HOSE ASSY- 96" 8 fjx-10fjx90	4
61	0310956	TOOLBOX LH AL ROT TRI 2010 W/	1
62	0310957	TOOLBOX RH AL ROT TRI 2010 W/	1
63	0311191	ROLLER, POLY, 4" X 5/8"	2
64	0311417	HOSE, 196" 3/8 2 X STRAIGHT	2
65	0311426	HOSE ASSY, 80" 4FJX-4FJX45	1
66	0311500	LIGHT 6"OVAL REVERSE LED	2
67	0311502	LIGHT 6"OVAL CLEAR-AMBER LED	4
68	0311503	GROMMET, LIGHT 6" OVAL	1
69	0311514	LIGHT 2.5" CLEAR LENS-RED LED	2
70	0311516	GROMMET, LIGHT 2.5" ROUND	2
71	0312309	LIGHT 6" OVAL GLO-LT STT CLR/R	4
72	0313129	HOSE, 1 SUCTION 16C4	3
73	0400005	SCREW, 6-32X1/2 PRH SS	6
74	04000381	SS BHSCS 1/4-20 X 1	1
75	0400066	SCREW, 1/4-20X3/4 HHC GR5	2
76	0400078	SCREW, 1/4-20X2 HHC GR5	2
77	0400367	NUT, 1/4-20 LOK	2
78	0400379	NUT, 5/16-18 SPR J	1
79	0400451	WASHER, 1/4	2
80	0400452	LKWASHER, 1/4	2
81	0400454	WASHER, 1/4 SS	1
82	0400491	LKWASHER, 1/2	2
83	0400492	WASHER, 1/2	2
84	0400497	WASHER, 1/2 GR8	6
85	0400498	WASHER, 1/2X2X0.125	1
86	0400900	NUT, 1/2-13 LOK JAM	2
87	0402020	SCREW, 1/4-20X3/4 HHC SS	2
88	0402021	SCREW, 1/4-20X1 HHC SS	1
89	0402043	SCREW, 3/8-16X1-1/4 HHC SS	8
90	0402094	NUT, HEX 6-32 SS	6
91	0402111	LKWASHER, 1/4 SS	3

ITEM	PART NUMBER	DESCRIPTION	QTY
92	0402113	NUT, 1/4-20 LOK SS	2
93	0402114	NUT, 1/4-20 LOK REV SS	1
94	0402120	WASHER, 3/8 SS	8
95	0402123	NUT, 3/8-16 LOK SS	8
96	07005922	MOUNT-HYD GAUGE	1
97	0712230	BOSS, TURNTABLE LOCK	1
98	0806994	HOUSE LOCK INDICATOR WELD	1
99	0810433	HHU CHAIN ROLLER BRACKET, LH	1
100	0810434	HHU CHAIN ROLLER BRACKET, RH	1
101	09000097	ILLUMINATED LEGEND ASSY-LT UP	1
102	09000135	ILLUMINATED LEGEND ASSY-RT UP	1
103	09001440	50K DRAG WINCH ASSY	1
104	09002243	VALVE ASSY, 1150 KNEE MAIN	1
105	09002244	VALVE ASSY, 1150 KNEE BOOM U/L	1
106	09002246	VALVE ASSY, PRESSURE REDUC	1
107	09002247	CONTROL ASSY, 11 HANDLE WV	1
108	09002910	PUMP KIT, 4K KNEE BOOM	1
109	09002949	ILLUM LEGEND LT 1150 KNEE	1
110	09003710	SUBFRAME ASSY, 1135 KNEE	1
111	09003733	WRECKER FRAME ASSY 1135	1
112	09003870	WINCH ASSY 1135 W/ 35K WINCH	1
113	09004266	U/L BOOM ASSEMBLY (SHORT)	1
114	0908418	KIT-MUDFLAP CENTURY ROTATOR	1
115	0910188	2-STAGE FRONT OUTRIGGER ASY	1
116	0910246	3-STAGE REAR OUTRIGGER ASSY	1
117	0910615	OUTRIGGER CONT VALVE KIT	1
118	0910935	XBAR ASY HRDWR-XHD 5X5 CENT	1
119	0911237	ILLUM LEGEND ASSY RH LWR WLV	1
120	0911324	RH CTL STATION ASSY 5 WINCH W	1
121	0911957	KIT, D-RING PARTS	2
122	0912071	ASSY, 1135 BOOM	1
123	124004464	ALUM HEEL PLATE-14" SDU4&COA	1
124	24773017	HOSE ASSEMBLY 140"LG	2
125	24773018	HOSE ASSEMBLY 140"LG	2
126	9018016	HOSE CLAMP HS-20 1 1/4"	4
127	9024041	SWITCH-ROCKER, LIGHTED 12V	2
128	9041402	1/2 NC X 1 1/4 HHCS PLT GR8	6
129	9041403	1/2 NC X 1 1/2 HHCS PL GR8	1
130	9402970	TOOLBOX MTG. PAD	1
131	942480011	PLATE,SLOT-SS REAR WASHER	2
132	AWS-6821-A	HOSE ASSY-PRESSURE	8
133	FC41	FITTING-90DEG BLKHD ELB W/ NUT	8
134	HC1291	FITTING, 4MJ-4MB STR THR	1

09003709, BASIC UNIT ASSEMBLY, 1135 KNEE BOOM

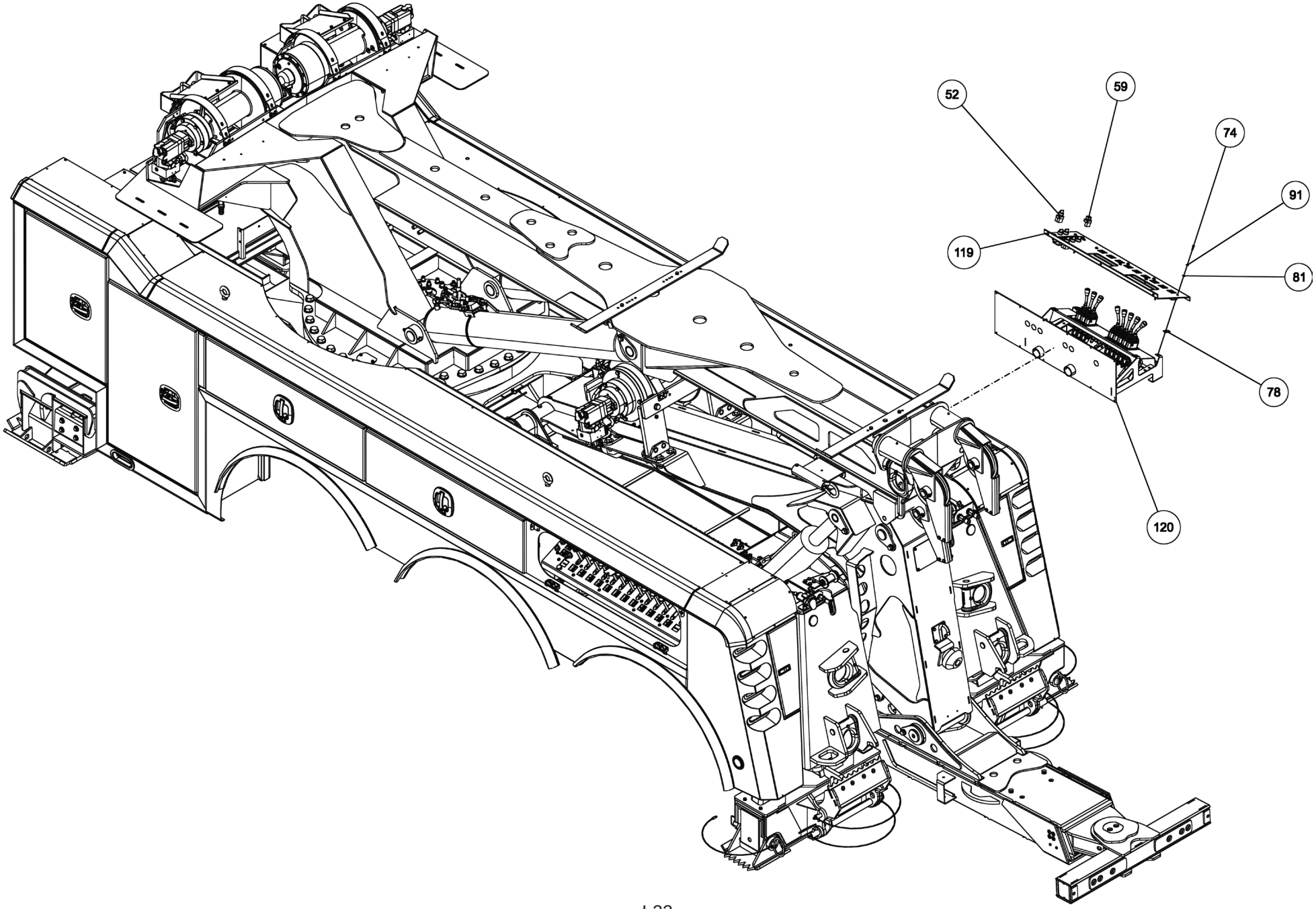

09003709, BASIC UNIT ASSEMBLY, 1135 KNEE BOOM

ITEM	PART NUMBER	DESCRIPTION	QTY
	09003709	BUA, 1135 KNEE BOOM	-
1	0300113	GREASE FITTING, 1/4-28 STR	1
2	03003419	HOSE, HYD 132" LG	1
3	03003420	HOSE, HYD 60" LG	1
4	03003421	HOSE, HYD 18"LG	4
5	03003424	HOSE, HYD 138"	1
6	03003425	HOSE, HYD 90" LG	4
7	03003426	HOSE, HYD 45" LG	6
8	0300364	CLAMP-HOSE,0.875"-2.75" 50"LBS	2
9	0300434	FITTING, HOSE BARB, 2	1
10	0300558	HOSE, SUCTION 2"ID 100R4 (C4)	1
11	0300835	KNOB-BOOM (UP-DOWN)	1
12	0300837	KNOB-BOOM (IN-OUT)	1
13	0300865	FITTING, CONNECTOR 8MJ-8MJ	1
14	0301113	HOSE HYD, 82"	2
15	0301377	FITTING, TEE,3/8" JIC	1
16	0301470	FITTING, 90ELB 6MJ-8MB90	3
17	0301473	HOSE HYD, 18" LG	1
18	0301522	ADAPTER, 6MJ-6MB	1
19	0301529	HOSE HYD, 58	2
20	03015922	STAUFF CLAMP, 3/8 TWIN	4
21	03016142	TUBE, HYD ASSY SF TO O/R	4
22	0301695	HOSE HYD, 91"	1
23	0301909	RECEPTACLE BOOT	1
24	0301946	FITTING, BLKHD CONNECT	3
25	0301947	FITTING, 45 DEG ADAPTER	1
26	0301948	HD 7 WAY TRAILER CONNECT	1
27	0301961	BALL VALVE 2	1
28	0302056	HOSE HYD, 183"	5
29	0302205	GAUGE, FLUSH MNTG-6000 PSI	2
30	0302367	PIPE NIPPLE - 2 X 4	1
31	0302372	HOSE HYD, 240" LG	4
32	0302534	FITTING, 45 DEG ELBOW	2
33	0302604	HOSE HYD, 44"	2
34	0302632	HOSE HYD, 40"	4
35	0302805	HOSE HYD, 10"	1
36	0302813	HOSE HYD, 108" LG	1
37	0302856	KNOB-TILT, 3/8-16 THREAD	1
38	0302881	HOSE HYD, 45"	1
39	0303170	HOSE, HYD. 75"	3
40	0303185	HOSE HYD, 66" LG.	4
41	0303188	HOSE HYD, 75" LG	1
42	0303339	HOSE HYD, 45" LG	1
43	0303340	HOSE HYD, 50" LG	1
44	0303379	KNOB, SWING CW - CCW	1
45	0303380	KNOB-UNDERLIFT (IN-OUT)	1

ITEM	PART NUMBER	DESCRIPTION	QTY
46	0303381	KNOB - UNDERLIFT (UP-DN)	1
47	0303391	HOSE 8AT2(8FJX-8FJ90) 110"	1
48	0303538	FITT, ADAPTER -BRASS 8FP-6MP	1
49	0303539	QUICK DISCONNECT 3/8 FPT	1
50	0304363	QUICK DISCONNECT 1/2 FPT	2
51	0306537	EMERGENCY SWITCH(RAMSEY)	2
52	0306540	ROTARY SELECT SWITCH OPER	1
53	0306921	PIPE PLUG, 2" SQ HD	1
54	0307052	WASHER, RUBBER 7/16X1 1/4X1/4	2
55	0307151	RUBBER FENDER	3
56	0307472	HOSE, HYD ASSY 24" LG	1
57	0307604	KNOB, RED LONG - SK0700-07	3
58	0310406	VALVE, SHUTTLE LS10-30-8T-N	1
59	0310456	PUSH BUTTN OPER W/MTG N/C	2
60	0310581	HOSE ASSY- 96" 8 fjx-10fjx90	4
61	0310956	TOOLBOX LH AL ROT TRI 2010 W/	1
62	0310957	TOOLBOX RH AL ROT TRI 2010 W/	1
63	0311191	ROLLER, POLY, 4" X 5/8"	2
64	0311417	HOSE, 196" 3/8 2 X STRAIGHT	2
65	0311426	HOSE ASSY, 80" 4FJX-4FJX45	1
66	0311500	LIGHT 6"OVAL REVERSE LED	2
67	0311502	LIGHT 6"OVAL CLEAR-AMBER LED	4
68	0311503	GROMMET, LIGHT 6" OVAL	1
69	0311514	LIGHT 2.5" CLEAR LENS-RED LED	2
70	0311516	GROMMET, LIGHT 2.5" ROUND	2
71	0312309	LIGHT 6" OVAL GLO-LT STT CLR/R	4
72	0313129	HOSE, 1 SUCTION 16C4	3
73	0400005	SCREW, 6-32X1/2 PRH SS	6
74	04000381	SS BHSCS 1/4-20 X 1	1
75	0400066	SCREW, 1/4-20X3/4 HHC GR5	2
76	0400078	SCREW, 1/4-20X2 HHC GR5	2
77	0400367	NUT, 1/4-20 LOK	2
78	0400379	NUT, 5/16-18 SPR J	1
79	0400451	WASHER, 1/4	2
80	0400452	LKWASHER, 1/4	2
81	0400454	WASHER, 1/4 SS	1
82	0400491	LKWASHER, 1/2	2
83	0400492	WASHER, 1/2	2
84	0400497	WASHER, 1/2 GR8	6
85	0400498	WASHER, 1/2X2X0.125	1
86	0400900	NUT, 1/2-13 LOK JAM	2
87	0402020	SCREW, 1/4-20X3/4 HHC SS	2
88	0402021	SCREW, 1/4-20X1 HHC SS	1
89	0402043	SCREW, 3/8-16X1-1/4 HHC SS	8
90	0402094	NUT, HEX 6-32 SS	6
91	0402111	LKWASHER, 1/4 SS	3

ITEM	PART NUMBER	DESCRIPTION	QTY
92	0402113	NUT, 1/4-20 LOK SS	2
93	0402114	NUT, 1/4-20 LOK REV SS	1
94	0402120	WASHER, 3/8 SS	8
95	0402123	NUT, 3/8-16 LOK SS	8
96	07005922	MOUNT-HYD GAUGE	1
97	0712230	BOSS, TURNTABLE LOCK	1
98	0806994	HOUSE LOCK INDICATOR WELD	1
99	0810433	HHU CHAIN ROLLER BRACKET, LH	1
100	0810434	HHU CHAIN ROLLER BRACKET, RH	1
101	09000097	ILLUMINATED LEGEND ASSY-LT UP	1
102	09000135	ILLUMINATED LEGEND ASSY-RT UP	1
103	09001440	50K DRAG WINCH ASSY	1
104	09002243	VALVE ASSY, 1150 KNEE MAIN	1
105	09002244	VALVE ASSY, 1150 KNEE BOOM U/L	1
106	09002246	VALVE ASSY, PRESSURE REDUC	1
107	09002247	CONTROL ASSY, 11 HANDLE WV	1
108	09002910	PUMP KIT, 4K KNEE BOOM	1
109	09002949	ILLUM LEGEND LT 1150 KNEE	1
110	09003710	SUBFRAME ASSY, 1135 KNEE	1
111	09003733	WRECKER FRAME ASSY 1135	1
112	09003870	WINCH ASSY 1135 W/ 35K WINCH	1
113	09004266	U/L BOOM ASSEMBLY (SHORT)	1
114	0908418	KIT-MUDFLAP CENTURY ROTATOR	1
115	0910188	2-STAGE FRONT OUTRIGGER ASY	1
116	0910246	3-STAGE REAR OUTRIGGER ASSY	1
117	0910615	OUTRIGGER CONT VALVE KIT	1
118	0910935	XBAR ASY HRDWR-XHD 5X5 CENT	1
119	0911237	ILLUM LEGEND ASSY RH LWR WLV	1
120	0911324	RH CTL STATION ASSY 5 WINCH W	1
121	0911957	KIT, D-RING PARTS	2
122	0912071	ASSY, 1135 BOOM	1
123	124004464	ALUM HEEL PLATE-14" SDU4&COA	1
124	24773017	HOSE ASSEMBLY 140"LG	2
125	24773018	HOSE ASSEMBLY 140"LG	2
126	9018016	HOSE CLAMP HS-20 1 1/4"	4
127	9024041	SWITCH-ROCKER, LIGHTED 12V	2
128	9041402	1/2 NC X 1 1/4 HHCS PLT GR8	6
129	9041403	1/2 NC X 1 1/2 HHCS PL GR8	1
130	9402970	TOOLBOX MTG. PAD	1
131	942480011	PLATE,SLOT-SS REAR WASHER	2
132	AWS-6821-A	HOSE ASSY-PRESSURE	8
133	FC41	FITTING-90DEG BLKHD ELB W/ NUT	8
134	HC1291	FITTING, 4MJ-4MB STR THR	1

09003709, BASIC UNIT ASSEMBLY, 1135 KNEE BOOM

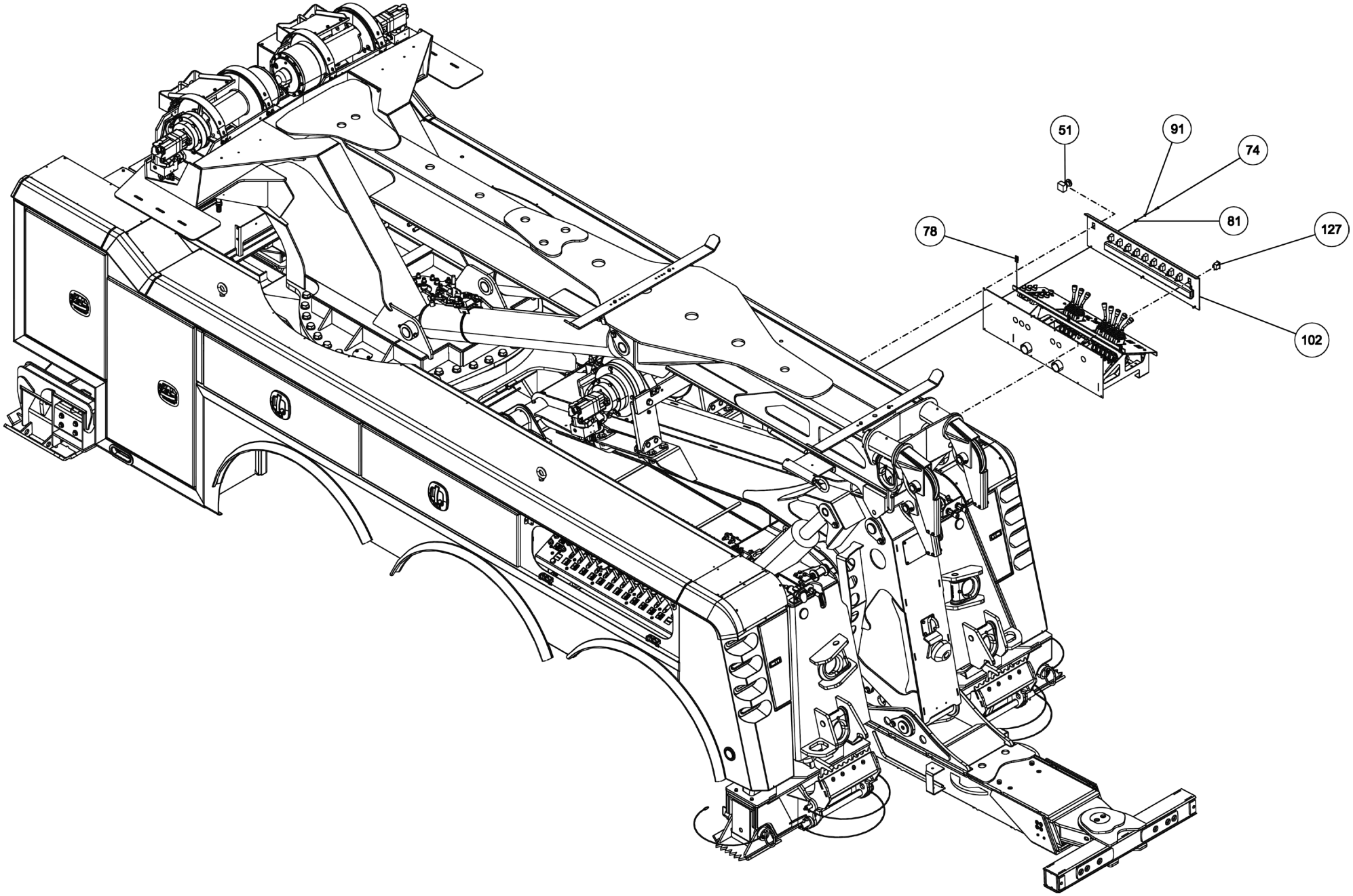

09003709, BASIC UNIT ASSEMBLY, 1135 KNEE BOOM

ITEM	PART NUMBER	DESCRIPTION	QTY
	09003709	BUA, 1135 KNEE BOOM	-
1	0300113	GREASE FITTING, 1/4-28 STR	1
2	03003419	HOSE, HYD 132" LG	1
3	03003420	HOSE, HYD 60" LG	1
4	03003421	HOSE, HYD 18"LG	4
5	03003424	HOSE, HYD 138"	1
6	03003425	HOSE, HYD 90" LG	4
7	03003426	HOSE, HYD 45" LG	6
8	0300364	CLAMP-HOSE,0.875"-2.75" 50"LBS	2
9	0300434	FITTING, HOSE BARB, 2	1
10	0300558	HOSE, SUCTION 2"ID 100R4 (C4)	1
11	0300835	KNOB-BOOM (UP-DOWN)	1
12	0300837	KNOB-BOOM (IN-OUT)	1
13	0300865	FITTING, CONNECTOR 8MJ-8MJ	1
14	0301113	HOSE HYD, 82"	2
15	0301377	FITTING, TEE,3/8" JIC	1
16	0301470	FITTING, 90ELB 6MJ-8MB90	3
17	0301473	HOSE HYD, 18" LG	1
18	0301522	ADAPTER, 6MJ-6MB	1
19	0301529	HOSE HYD, 58	2
20	03015922	STAUFF CLAMP, 3/8 TWIN	4
21	03016142	TUBE, HYD ASSY SF TO O/R	4
22	0301695	HOSE HYD, 91"	1
23	0301909	RECEPTACLE BOOT	1
24	0301946	FITTING, BLKHD CONNECT	3
25	0301947	FITTING, 45 DEG ADAPTER	1
26	0301948	HD 7 WAY TRAILER CONNECT	1
27	0301961	BALL VALVE 2	1
28	0302056	HOSE HYD, 183"	5
29	0302205	GAUGE, FLUSH MNTG-6000 PSI	2
30	0302367	PIPE NIPPLE - 2 X 4	1
31	0302372	HOSE HYD, 240" LG	4
32	0302534	FITTING, 45 DEG ELBOW	2
33	0302604	HOSE HYD, 44"	2
34	0302632	HOSE HYD, 40"	4
35	0302805	HOSE HYD, 10"	1
36	0302813	HOSE HYD, 108" LG	1
37	0302856	KNOB-TILT, 3/8-16 THREAD	1
38	0302881	HOSE HYD, 45"	1
39	0303170	HOSE, HYD. 75"	3
40	0303185	HOSE HYD, 66" LG.	4
41	0303188	HOSE HYD, 75" LG	1
42	0303339	HOSE HYD, 45" LG	1
43	0303340	HOSE HYD, 50" LG	1
44	0303379	KNOB, SWING CW - CCW	1
45	0303380	KNOB-UNDERLIFT (IN-OUT)	1

ITEM	PART NUMBER	DESCRIPTION	QTY
46	0303381	KNOB - UNDERLIFT (UP-DN)	1
47	0303391	HOSE 8AT2(8FJX-8FJ90) 110"	1
48	0303538	FITT, ADAPTER -BRASS 8FP-6MP	1
49	0303539	QUICK DISCONNECT 3/8 FPT	1
50	0304363	QUICK DISCONNECT 1/2 FPT	2
51	0306537	EMERGENCY SWITCH(RAMSEY)	2
52	0306540	ROTARY SELECT SWITCH OPER	1
53	0306921	PIPE PLUG, 2" SQ HD	1
54	0307052	WASHER, RUBBER 7/16X1 1/4X1/4	2
55	0307151	RUBBER FENDER	3
56	0307472	HOSE, HYD ASSY 24" LG	1
57	0307604	KNOB, RED LONG - SK0700-07	3
58	0310406	VALVE, SHUTTLE LS10-30-8T-N	1
59	0310456	PUSH BUTTN OPER W/MTG N/C	2
60	0310581	HOSE ASSY- 96" 8 fjx-10fjx90	4
61	0310956	TOOLBOX LH AL ROT TRI 2010 W/	1
62	0310957	TOOLBOX RH AL ROT TRI 2010 W/	1
63	0311191	ROLLER, POLY, 4" X 5/8"	2
64	0311417	HOSE, 196" 3/8 2 X STRAIGHT	2
65	0311426	HOSE ASSY, 80" 4FJX-4FJX45	1
66	0311500	LIGHT 6"OVAL REVERSE LED	2
67	0311502	LIGHT 6"OVAL CLEAR-AMBER LED	4
68	0311503	GROMMET, LIGHT 6" OVAL	1
69	0311514	LIGHT 2.5" CLEAR LENS-RED LED	2
70	0311516	GROMMET, LIGHT 2.5" ROUND	2
71	0312309	LIGHT 6" OVAL GLO-LT STT CLR/R	4
72	0313129	HOSE, 1 SUCTION 16C4	3
73	0400005	SCREW, 6-32X1/2 PRH SS	6
74	04000381	SS BHSCS 1/4-20 X 1	1
75	0400066	SCREW, 1/4-20X3/4 HHC GR5	2
76	0400078	SCREW, 1/4-20X2 HHC GR5	2
77	0400367	NUT, 1/4-20 LOK	2
78	0400379	NUT, 5/16-18 SPR J	1
79	0400451	WASHER, 1/4	2
80	0400452	LKWASHER, 1/4	2
81	0400454	WASHER, 1/4 SS	1
82	0400491	LKWASHER, 1/2	2
83	0400492	WASHER, 1/2	2
84	0400497	WASHER, 1/2 GR8	6
85	0400498	WASHER, 1/2X2X0.125	1
86	0400900	NUT, 1/2-13 LOK JAM	2
87	0402020	SCREW, 1/4-20X3/4 HHC SS	2
88	0402021	SCREW, 1/4-20X1 HHC SS	1
89	0402043	SCREW, 3/8-16X1-1/4 HHC SS	8
90	0402094	NUT, HEX 6-32 SS	6
91	0402111	LKWASHER, 1/4 SS	3

ITEM	PART NUMBER	DESCRIPTION	QTY
92	0402113	NUT, 1/4-20 LOK SS	2
93	0402114	NUT, 1/4-20 LOK REV SS	1
94	0402120	WASHER, 3/8 SS	8
95	0402123	NUT, 3/8-16 LOK SS	8
96	07005922	MOUNT-HYD GAUGE	1
97	0712230	BOSS, TURNTABLE LOCK	1
98	0806994	HOUSE LOCK INDICATOR WELD	1
99	0810433	HHU CHAIN ROLLER BRACKET, LH	1
100	0810434	HHU CHAIN ROLLER BRACKET, RH	1
101	09000097	ILLUMINATED LEGEND ASSY-LT UP	1
102	09000135	ILLUMINATED LEGEND ASSY-RT UP	1
103	09001440	50K DRAG WINCH ASSY	1
104	09002243	VALVE ASSY, 1150 KNEE MAIN	1
105	09002244	VALVE ASSY, 1150 KNEE BOOM U/L	1
106	09002246	VALVE ASSY, PRESSURE REDUC	1
107	09002247	CONTROL ASSY, 11 HANDLE WV	1
108	09002910	PUMP KIT, 4K KNEE BOOM	1
109	09002949	ILLUM LEGEND LT 1150 KNEE	1
110	09003710	SUBFRAME ASSY, 1135 KNEE	1
111	09003733	WRECKER FRAME ASSY 1135	1
112	09003870	WINCH ASSY 1135 W/ 35K WINCH	1
113	09004266	U/L BOOM ASSEMBLY (SHORT)	1
114	0908418	KIT-MUDFLAP CENTURY ROTATOR	1
115	0910188	2-STAGE FRONT OUTRIGGER ASY	1
116	0910246	3-STAGE REAR OUTRIGGER ASSY	1
117	0910615	OUTRIGGER CONT VALVE KIT	1
118	0910935	XBAR ASY HRDWR-XHD 5X5 CENT	1
119	0911237	ILLUM LEGEND ASSY RH LWR WLV	1
120	0911324	RH CTL STATION ASSY 5 WINCH W	1
121	0911957	KIT, D-RING PARTS	2
122	0912071	ASSY, 1135 BOOM	1
123	124004464	ALUM HEEL PLATE-14" SDU4&COA	1
124	24773017	HOSE ASSEMBLY 140"LG	2
125	24773018	HOSE ASSEMBLY 140"LG	2
126	9018016	HOSE CLAMP HS-20 1 1/4"	4
127	9024041	SWITCH-ROCKER, LIGHTED 12V	2
128	9041402	1/2 NC X 1 1/4 HHCS PLT GR8	6
129	9041403	1/2 NC X 1 1/2 HHCS PL GR8	1
130	9402970	TOOLBOX MTG. PAD	1
131	942480011	PLATE,SLOT-SS REAR WASHER	2
132	AWS-6821-A	HOSE ASSY-PRESSURE	8
133	FC41	FITTING-90DEG BLKHD ELB W/ NUT	8
134	HC1291	FITTING, 4MJ-4MB STR THR	1

09003709, BASIC UNIT ASSEMBLY, 1135 KNEE BOOM

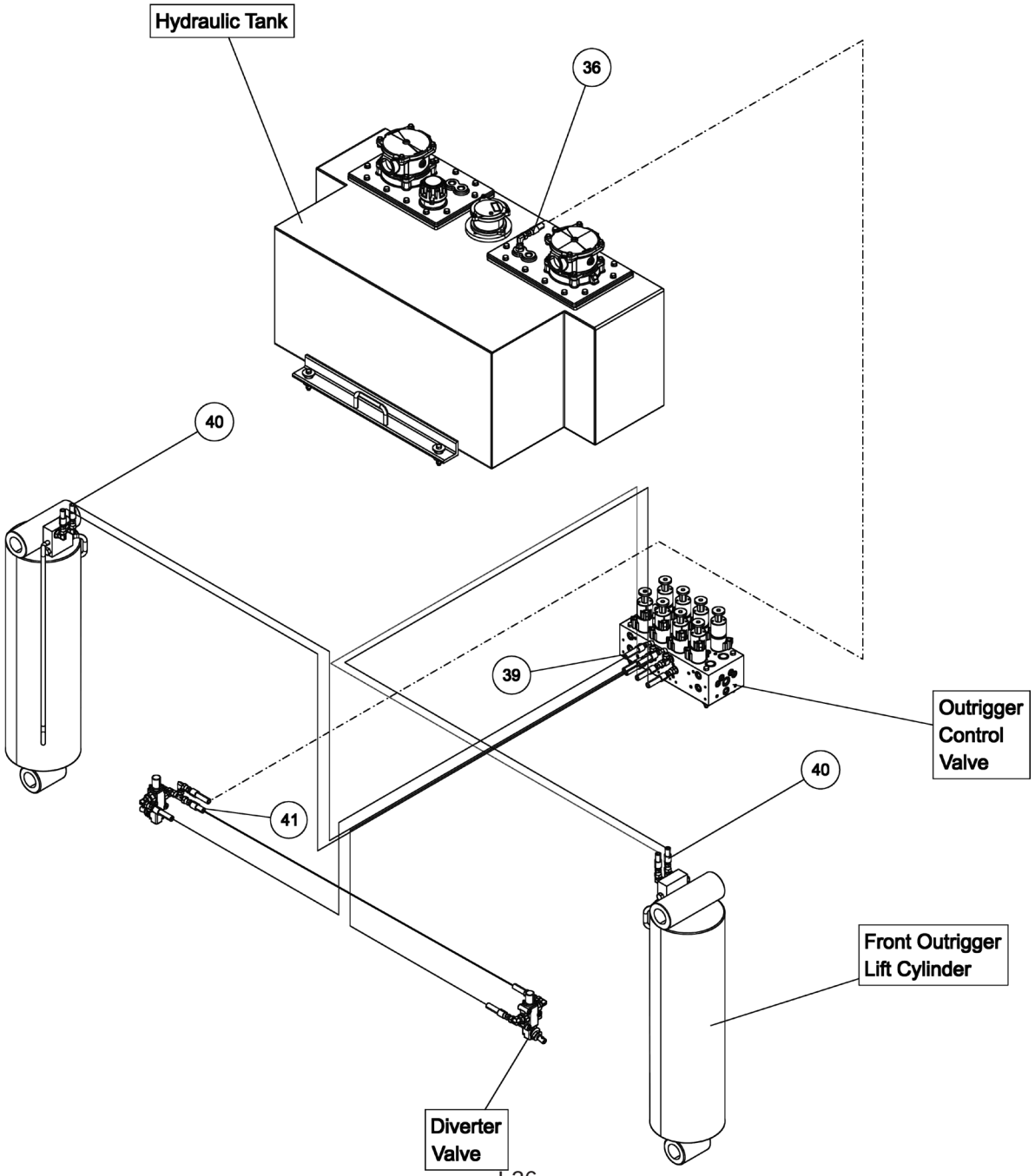

09003709, BASIC UNIT ASSEMBLY, 1135 KNEE BOOM

ITEM	PART NUMBER	DESCRIPTION	QTY
	09003709	BUA, 1135 KNEE BOOM	-
1	0300113	GREASE FITTING, 1/4-28 STR	1
2	03003419	HOSE, HYD 132" LG	1
3	03003420	HOSE, HYD 60" LG	1
4	03003421	HOSE, HYD 18"LG	4
5	03003424	HOSE, HYD 138"	1
6	03003425	HOSE, HYD 90" LG	4
7	03003426	HOSE, HYD 45" LG	6
8	0300364	CLAMP-HOSE,0.875"-2.75" 50"LBS	2
9	0300434	FITTING, HOSE BARB, 2	1
10	0300558	HOSE, SUCTION 2"ID 100R4 (C4)	1
11	0300835	KNOB-BOOM (UP-DOWN)	1
12	0300837	KNOB-BOOM (IN-OUT)	1
13	0300865	FITTING, CONNECTOR 8MJ-8MJ	1
14	0301113	HOSE HYD, 82"	2
15	0301377	FITTING, TEE,3/8" JIC	1
16	0301470	FITTING, 90ELB 6MJ-8MB90	3
17	0301473	HOSE HYD, 18" LG	1
18	0301522	ADAPTER, 6MJ-6MB	1
19	0301529	HOSE HYD, 58	2
20	03015922	STAUFF CLAMP, 3/8 TWIN	4
21	03016142	TUBE, HYD ASSY SF TO O/R	4
22	0301695	HOSE HYD, 91"	1
23	0301909	RECEPTACLE BOOT	1
24	0301946	FITTING, BLKHD CONNECT	3
25	0301947	FITTING, 45 DEG ADAPTER	1
26	0301948	HD 7 WAY TRAILER CONNECT	1
27	0301961	BALL VALVE 2	1
28	0302056	HOSE HYD, 183"	5
29	0302205	GAUGE, FLUSH MNTG-6000 PSI	2
30	0302367	PIPE NIPPLE - 2 X 4	1
31	0302372	HOSE HYD, 240" LG	4
32	0302534	FITTING, 45 DEG ELBOW	2
33	0302604	HOSE HYD, 44"	2
34	0302632	HOSE HYD, 40"	4
35	0302805	HOSE HYD, 10"	1
36	0302813	HOSE HYD, 108" LG	1
37	0302856	KNOB-TILT, 3/8-16 THREAD	1
38	0302881	HOSE HYD, 45"	1
39	0303170	HOSE, HYD. 75"	3
40	0303185	HOSE HYD, 66" LG.	4
41	0303188	HOSE HYD, 75" LG	1
42	0303339	HOSE HYD, 45" LG	1
43	0303340	HOSE HYD, 50" LG	1
44	0303379	KNOB, SWING CW - CCW	1
45	0303380	KNOB-UNDERLIFT (IN-OUT)	1
46	0303381	KNOB - UNDERLIFT (UP-DN)	1
47	0303391	HOSE 8AT2(8FJX-8FJ90) 110"	1
48	0303538	FITT, ADAPTER -BRASS 8FP-6MP	1
49	0303539	QUICK DISCONNECT 3/8 FPT	1
50	0304363	QUICK DISCONNECT 1/2 FPT	2
51	0306537	EMERGENCY SWITCH(RAMSEY)	2
52	0306540	ROTARY SELECT SWITCH OPER	1
53	0306921	PIPE PLUG, 2" SQ HD	1
54	0307052	WASHER, RUBBER 7/16X1 1/4X1/4	2
55	0307151	RUBBER FENDER	3
56	0307472	HOSE, HYD ASSY 24" LG	1
57	0307604	KNOB, RED LONG - SK0700-07	3
58	0310406	VALVE, SHUTTLE LS10-30-8T-N	1
59	0310456	PUSH BUTTN OPER W/MTG N/C	2
60	0310581	HOSE ASSY- 96" 8 fjx-10fjx90	4
61	0310956	TOOLBOX LH AL ROT TRI 2010 W/	1
62	0310957	TOOLBOX RH AL ROT TRI 2010 W/	1
63	0311191	ROLLER, POLY, 4" X 5/8"	2
64	0311417	HOSE, 196" 3/8 2 X STRAIGHT	2
65	0311426	HOSE ASSY, 80" 4FJX-4FJX45	1
66	0311500	LIGHT 6"OVAL REVERSE LED	2
67	0311502	LIGHT 6"OVAL CLEAR-AMBER LED	4
68	0311503	GROMMET, LIGHT 6" OVAL	1
69	0311514	LIGHT 2.5" CLEAR LENS-RED LED	2
70	0311516	GROMMET, LIGHT 2.5" ROUND	2
71	0312309	LIGHT 6" OVAL GLO-LT STT CLR/R	4
72	0313129	HOSE, 1 SUCTION 16C4	3
73	0400005	SCREW, 6-32X1/2 PRH SS	6
74	04000381	SS BHSCS 1/4-20 X 1	1
75	0400066	SCREW, 1/4-20X3/4 HHC GR5	2
76	0400078	SCREW, 1/4-20X2 HHC GR5	2
77	0400367	NUT, 1/4-20 LOK	2
78	0400379	NUT, 5/16-18 SPR J	1
79	0400451	WASHER, 1/4	2
80	0400452	LKWASHER, 1/4	2
81	0400454	WASHER, 1/4 SS	1
82	0400491	LKWASHER, 1/2	2
83	0400492	WASHER, 1/2	2
84	0400497	WASHER, 1/2 GR8	6
85	0400498	WASHER, 1/2X2X0.125	1
86	0400900	NUT, 1/2-13 LOK JAM	2
87	0402020	SCREW, 1/4-20X3/4 HHC SS	2
88	0402021	SCREW, 1/4-20X1 HHC SS	1
89	0402043	SCREW, 3/8-16X1-1/4 HHC SS	8
90	0402094	NUT, HEX 6-32 SS	6
91	0402111	LKWASHER, 1/4 SS	3
92	0402113	NUT, 1/4-20 LOK SS	2
93	0402114	NUT, 1/4-20 LOK REV SS	1
94	0402120	WASHER, 3/8 SS	8
95	0402123	NUT, 3/8-16 LOK SS	8
96	07005922	MOUNT-HYD GAUGE	1
97	0712230	BOSS, TURNTABLE LOCK	1
98	0806994	HOUSE LOCK INDICATOR WELD	1
99	0810433	HHU CHAIN ROLLER BRACKET, LH	1
100	0810434	HHU CHAIN ROLLER BRACKET, RH	1
101	09000097	ILLUMINATED LEGEND ASSY-LT UP	1
102	09000135	ILLUMINATED LEGEND ASSY-RT UP	1
103	09001440	50K DRAG WINCH ASSY	1
104	09002243	VALVE ASSY, 1150 KNEE MAIN	1
105	09002244	VALVE ASSY, 1150 KNEE BOOM U/L	1
106	09002246	VALVE ASSY, PRESSURE REDUC	1
107	09002247	CONTROL ASSY, 11 HANDLE WV	1
108	09002910	PUMP KIT, 4K KNEE BOOM	1
109	09002949	ILLUM LEGEND LT 1150 KNEE	1
110	09003710	SUBFRAME ASSY, 1135 KNEE	1
111	09003733	WRECKER FRAME ASSY 1135	1
112	09003870	WINCH ASSY 1135 W/ 35K WINCH	1
113	09004266	U/L BOOM ASSEMBLY (SHORT)	1
114	0908418	KIT-MUDFLAP CENTURY ROTATOR	1
115	0910188	2-STAGE FRONT OUTRIGGER ASY	1
116	0910246	3-STAGE REAR OUTRIGGER ASSY	1
117	0910615	OUTRIGGER CONT VALVE KIT	1
118	0910935	XBAR ASY HRDWR-XHD 5X5 CENT	1
119	0911237	ILLUM LEGEND ASSY RH LWR WLV	1
120	0911324	RH CTL STATION ASSY 5 WINCH W	1
121	0911957	KIT, D-RING PARTS	2
122	0912071	ASSY, 1135 BOOM	1
123	124004464	ALUM HEEL PLATE-14" SDU4&COA	1
124	24773017	HOSE ASSEMBLY 140"LG	2
125	24773018	HOSE ASSEMBLY 140"LG	2
126	9018016	HOSE CLAMP HS-20 1 1/4"	4
127	9024041	SWITCH-ROCKER, LIGHTED 12V	2
128	9041402	1/2 NC X 1 1/4 HHCS PLT GR8	6
129	9041403	1/2 NC X 1 1/2 HHCS PL GR8	1
130	9402970	TOOLBOX MTG. PAD	1
131	942480011	PLATE,SLOT-SS REAR WASHER	2
132	AWS-6821-A	HOSE ASSY-PRESSURE	8
133	FC41	FITTING-90DEG BLKHD ELB W/ NUT	8
134	HC1291	FITTING, 4MJ-4MB STR THR	1

09003709, BASIC UNIT ASSEMBLY, 1135 KNEE BOOM

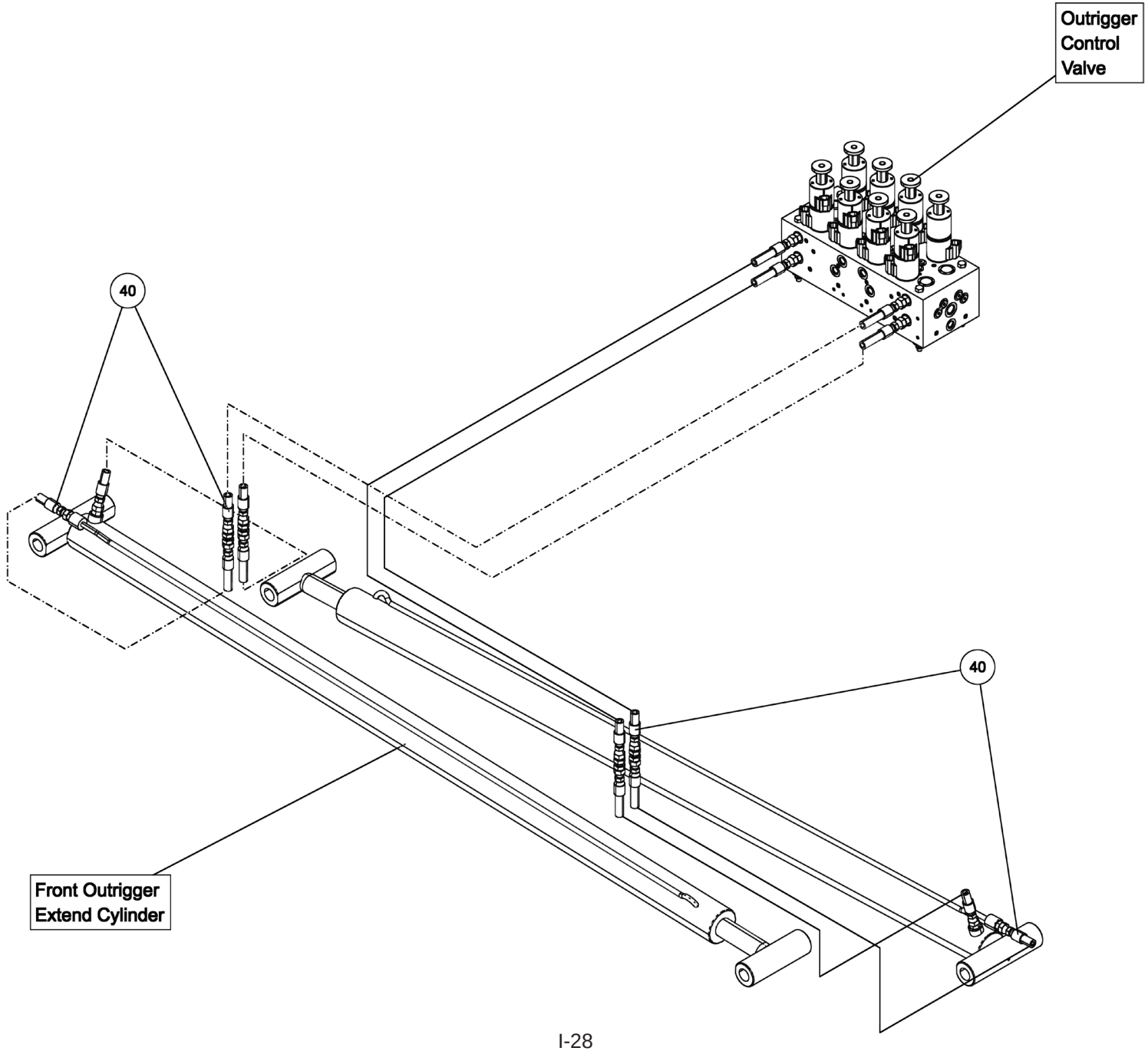

09003709, BASIC UNIT ASSEMBLY, 1135 KNEE BOOM

ITEM	PART NUMBER	DESCRIPTION	QTY
	09003709	BUA, 1135 KNEE BOOM	-
1	0300113	GREASE FITTING, 1/4-28 STR	1
2	03003419	HOSE, HYD 132" LG	1
3	03003420	HOSE, HYD 60" LG	1
4	03003421	HOSE, HYD 18"LG	4
5	03003424	HOSE, HYD 138"	1
6	03003425	HOSE, HYD 90" LG	4
7	03003426	HOSE, HYD 45" LG	6
8	0300364	CLAMP-HOSE,0.875"-2.75" 50"LBS	2
9	0300434	FITTING, HOSE BARB, 2	1
10	0300558	HOSE, SUCTION 2"ID 100R4 (C4)	1
11	0300835	KNOB-BOOM (UP-DOWN)	1
12	0300837	KNOB-BOOM (IN-OUT)	1
13	0300865	FITTING, CONNECTOR 8MJ-8MJ	1
14	0301113	HOSE HYD, 82"	2
15	0301377	FITTING, TEE,3/8" JIC	1
16	0301470	FITTING, 90ELB 6MJ-8MB90	3
17	0301473	HOSE HYD, 18" LG	1
18	0301522	ADAPTER, 6MJ-6MB	1
19	0301529	HOSE HYD, 58	2
20	03015922	STAUFF CLAMP, 3/8 TWIN	4
21	03016142	TUBE, HYD ASSY SF TO O/R	4
22	0301695	HOSE HYD, 91"	1
23	0301909	RECEPTACLE BOOT	1
24	0301946	FITTING, BLKHD CONNECT	3
25	0301947	FITTING, 45 DEG ADAPTER	1
26	0301948	HD 7 WAY TRAILER CONNECT	1
27	0301961	BALL VALVE 2	1
28	0302056	HOSE HYD, 183"	5
29	0302205	GAUGE, FLUSH MNTG-6000 PSI	2
30	0302367	PIPE NIPPLE - 2 X 4	1
31	0302372	HOSE HYD, 240" LG	4
32	0302534	FITTING, 45 DEG ELBOW	2
33	0302604	HOSE HYD, 44"	2
34	0302632	HOSE HYD, 40"	4
35	0302805	HOSE HYD, 10"	1
36	0302813	HOSE HYD, 108" LG	1
37	0302856	KNOB-TILT, 3/8-16 THREAD	1
38	0302881	HOSE HYD, 45"	1
39	0303170	HOSE, HYD. 75"	3
40	0303185	HOSE HYD, 66" LG.	4
41	0303188	HOSE HYD, 75" LG	1
42	0303339	HOSE HYD, 45" LG	1
43	0303340	HOSE HYD, 50" LG	1
44	0303379	KNOB, SWING CW - CCW	1
45	0303380	KNOB-UNDERLIFT (IN-OUT)	1

ITEM	PART NUMBER	DESCRIPTION	QTY
46	0303381	KNOB - UNDERLIFT (UP-DN)	1
47	0303391	HOSE 8AT2(8FJX-8FJ90) 110"	1
48	0303538	FITT, ADAPTER -BRASS 8FP-6MP	1
49	0303539	QUICK DISCONNECT 3/8 FPT	1
50	0304363	QUICK DISCONNECT 1/2 FPT	2
51	0306537	EMERGENCY SWITCH(RAMSEY)	2
52	0306540	ROTARY SELECT SWITCH OPER	1
53	0306921	PIPE PLUG, 2" SQ HD	1
54	0307052	WASHER, RUBBER 7/16X1 1/4X1/4	2
55	0307151	RUBBER FENDER	3
56	0307472	HOSE, HYD ASSY 24" LG	1
57	0307604	KNOB, RED LONG - SK0700-07	3
58	0310406	VALVE, SHUTTLE LS10-30-8T-N	1
59	0310456	PUSH BUTTN OPER W/MTG N/C	2
60	0310581	HOSE ASSY- 96" 8 fjx-10fjx90	4
61	0310956	TOOLBOX LH AL ROT TRI 2010 W/	1
62	0310957	TOOLBOX RH AL ROT TRI 2010 W/	1
63	0311191	ROLLER, POLY, 4" X 5/8"	2
64	0311417	HOSE, 196" 3/8 2 X STRAIGHT	2
65	0311426	HOSE ASSY, 80" 4FJX-4FJX45	1
66	0311500	LIGHT 6"OVAL REVERSE LED	2
67	0311502	LIGHT 6"OVAL CLEAR-AMBER LED	4
68	0311503	GROMMET, LIGHT 6" OVAL	1
69	0311514	LIGHT 2.5" CLEAR LENS-RED LED	2
70	0311516	GROMMET, LIGHT 2.5" ROUND	2
71	0312309	LIGHT 6" OVAL GLO-LT STT CLR/R	4
72	0313129	HOSE, 1 SUCTION 16C4	3
73	0400005	SCREW, 6-32X1/2 PRH SS	6
74	04000381	SS BHSCS 1/4-20 X 1	1
75	0400066	SCREW, 1/4-20X3/4 HHC GR5	2
76	0400078	SCREW, 1/4-20X2 HHC GR5	2
77	0400367	NUT, 1/4-20 LOK	2
78	0400379	NUT, 5/16-18 SPR J	1
79	0400451	WASHER, 1/4	2
80	0400452	LKWASHER, 1/4	2
81	0400454	WASHER, 1/4 SS	1
82	0400491	LKWASHER, 1/2	2
83	0400492	WASHER, 1/2	2
84	0400497	WASHER, 1/2 GR8	6
85	0400498	WASHER, 1/2X2X0.125	1
86	0400900	NUT, 1/2-13 LOK JAM	2
87	0402020	SCREW, 1/4-20X3/4 HHC SS	2
88	0402021	SCREW, 1/4-20X1 HHC SS	1
89	0402043	SCREW, 3/8-16X1-1/4 HHC SS	8
90	0402094	NUT, HEX 6-32 SS	6
91	0402111	LKWASHER, 1/4 SS	3

ITEM	PART NUMBER	DESCRIPTION	QTY
92	0402113	NUT, 1/4-20 LOK SS	2
93	0402114	NUT, 1/4-20 LOK REV SS	1
94	0402120	WASHER, 3/8 SS	8
95	0402123	NUT, 3/8-16 LOK SS	8
96	07005922	MOUNT-HYD GAUGE	1
97	0712230	BOSS, TURNTABLE LOCK	1
98	0806994	HOUSE LOCK INDICATOR WELD	1
99	0810433	HHU CHAIN ROLLER BRACKET, LH	1
100	0810434	HHU CHAIN ROLLER BRACKET, RH	1
101	09000097	ILLUMINATED LEGEND ASSY-LT UP	1
102	09000135	ILLUMINATED LEGEND ASSY-RT UP	1
103	09001440	50K DRAG WINCH ASSY	1
104	09002243	VALVE ASSY, 1150 KNEE MAIN	1
105	09002244	VALVE ASSY, 1150 KNEE BOOM U/L	1
106	09002246	VALVE ASSY, PRESSURE REDUC	1
107	09002247	CONTROL ASSY, 11 HANDLE WV	1
108	09002910	PUMP KIT, 4K KNEE BOOM	1
109	09002949	ILLUM LEGEND LT 1150 KNEE	1
110	09003710	SUBFRAME ASSY, 1135 KNEE	1
111	09003733	WRECKER FRAME ASSY 1135	1
112	09003870	WINCH ASSY 1135 W/ 35K WINCH	1
113	09004266	U/L BOOM ASSEMBLY (SHORT)	1
114	0908418	KIT-MUDFLAP CENTURY ROTATOR	1
115	0910188	2-STAGE FRONT OUTRIGGER ASY	1
116	0910246	3-STAGE REAR OUTRIGGER ASSY	1
117	0910615	OUTRIGGER CONT VALVE KIT	1
118	0910935	XBAR ASY HRDWR-XHD 5X5 CENT	1
119	0911237	ILLUM LEGEND ASSY RH LWR WLV	1
120	0911324	RH CTL STATION ASSY 5 WINCH W	1
121	0911957	KIT, D-RING PARTS	2
122	0912071	ASSY, 1135 BOOM	1
123	124004464	ALUM HEEL PLATE-14" SDU4&COA	1
124	24773017	HOSE ASSEMBLY 140"LG	2
125	24773018	HOSE ASSEMBLY 140"LG	2
126	9018016	HOSE CLAMP HS-20 1 1/4"	4
127	9024041	SWITCH-ROCKER, LIGHTED 12V	2
128	9041402	1/2 NC X 1 1/4 HHCS PLT GR8	6
129	9041403	1/2 NC X 1 1/2 HHCS PL GR8	1
130	9402970	TOOLBOX MTG. PAD	1
131	942480011	PLATE,SLOT-SS REAR WASHER	2
132	AWS-6821-A	HOSE ASSY-PRESSURE	8
133	FC41	FITTING-90DEG BLKHD ELB W/ NUT	8
134	HC1291	FITTING, 4MJ-4MB STR THR	1

09003709, BASIC UNIT ASSEMBLY, 1135 KNEE BOOM

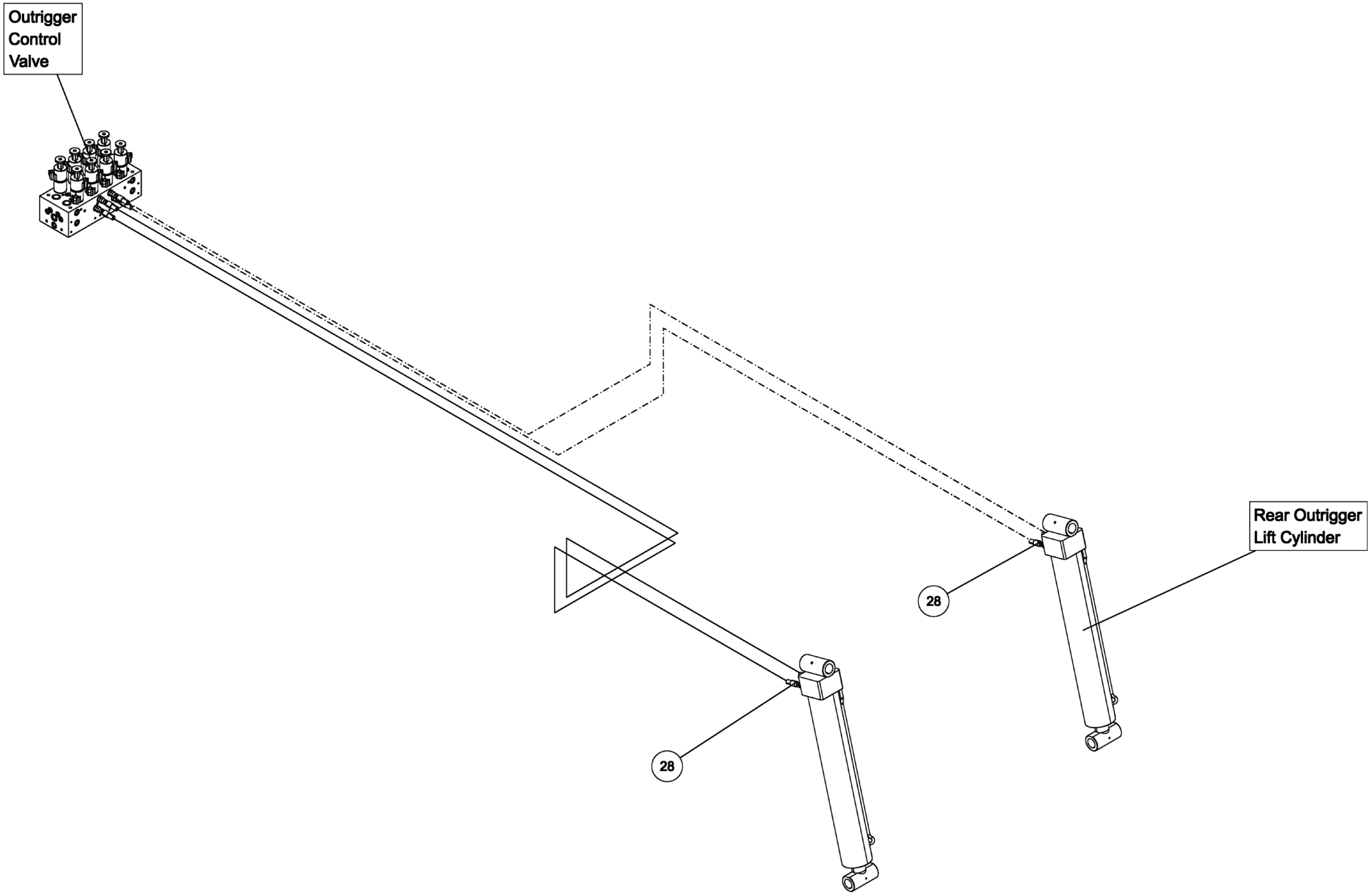

09003709, BASIC UNIT ASSEMBLY, 1135 KNEE BOOM

ITEM	PART NUMBER	DESCRIPTION	QTY
	09003709	BUA, 1135 KNEE BOOM	-
1	0300113	GREASE FITTING, 1/4-28 STR	1
2	03003419	HOSE, HYD 132" LG	1
3	03003420	HOSE, HYD 60" LG	1
4	03003421	HOSE, HYD 18"LG	4
5	03003424	HOSE, HYD 138"	1
6	03003425	HOSE, HYD 90" LG	4
7	03003426	HOSE, HYD 45" LG	6
8	0300364	CLAMP-HOSE,0.875"-2.75" 50"LBS	2
9	0300434	FITTING, HOSE BARB, 2	1
10	0300558	HOSE, SUCTION 2"ID 100R4 (C4)	1
11	0300835	KNOB-BOOM (UP-DOWN)	1
12	0300837	KNOB-BOOM (IN-OUT)	1
13	0300865	FITTING, CONNECTOR 8MJ-8MJ	1
14	0301113	HOSE HYD, 82"	2
15	0301377	FITTING, TEE,3/8" JIC	1
16	0301470	FITTING, 90ELB 6MJ-8MB90	3
17	0301473	HOSE HYD, 18" LG	1
18	0301522	ADAPTER, 6MJ-6MB	1
19	0301529	HOSE HYD, 58	2
20	03015922	STAUFF CLAMP, 3/8 TWIN	4
21	03016142	TUBE, HYD ASSY SF TO O/R	4
22	0301695	HOSE HYD, 91"	1
23	0301909	RECEPTACLE BOOT	1
24	0301946	FITTING, BLKHD CONNECT	3
25	0301947	FITTING, 45 DEG ADAPTER	1
26	0301948	HD 7 WAY TRAILER CONNECT	1
27	0301961	BALL VALVE 2	1
28	0302056	HOSE HYD, 183"	5
29	0302205	GAUGE, FLUSH MNTG-6000 PSI	2
30	0302367	PIPE NIPPLE - 2 X 4	1
31	0302372	HOSE HYD, 240" LG	4
32	0302534	FITTING, 45 DEG ELBOW	2
33	0302604	HOSE HYD, 44"	2
34	0302632	HOSE HYD, 40"	4
35	0302805	HOSE HYD, 10"	1
36	0302813	HOSE HYD, 108" LG	1
37	0302856	KNOB-TILT, 3/8-16 THREAD	1
38	0302881	HOSE HYD, 45"	1
39	0303170	HOSE, HYD. 75"	3
40	0303185	HOSE HYD, 66" LG.	4
41	0303188	HOSE HYD, 75" LG	1
42	0303339	HOSE HYD, 45" LG	1
43	0303340	HOSE HYD, 50" LG	1
44	0303379	KNOB, SWING CW - CCW	1
45	0303380	KNOB-UNDERLIFT (IN-OUT)	1
46	0303381	KNOB - UNDERLIFT (UP-DN)	1
47	0303391	HOSE 8AT2(8FJX-8FJ90) 110"	1
48	0303538	FITT, ADAPTER -BRASS 8FP-6MP	1
49	0303539	QUICK DISCONNECT 3/8 FPT	1
50	0304363	QUICK DISCONNECT 1/2 FPT	2
51	0306537	EMERGENCY SWITCH(RAMSEY)	2
52	0306540	ROTARY SELECT SWITCH OPER	1
53	0306921	PIPE PLUG, 2" SQ HD	1
54	0307052	WASHER, RUBBER 7/16X1 1/4X1/4	2
55	0307151	RUBBER FENDER	3
56	0307472	HOSE, HYD ASSY 24" LG	1
57	0307604	KNOB, RED LONG - SK0700-07	3
58	0310406	VALVE, SHUTTLE LS10-30-8T-N	1
59	0310456	PUSH BUTTN OPER W/MTG N/C	2
60	0310581	HOSE ASSY- 96" 8 fjx-10fjx90	4
61	0310956	TOOLBOX LH AL ROT TRI 2010 W/	1
62	0310957	TOOLBOX RH AL ROT TRI 2010 W/	1
63	0311191	ROLLER, POLY, 4" X 5/8"	2
64	0311417	HOSE, 196" 3/8 2 X STRAIGHT	2
65	0311426	HOSE ASSY, 80" 4FJX-4FJX45	1
66	0311500	LIGHT 6"OVAL REVERSE LED	2
67	0311502	LIGHT 6"OVAL CLEAR-AMBER LED	4
68	0311503	GROMMET, LIGHT 6" OVAL	1
69	0311514	LIGHT 2.5" CLEAR LENS-RED LED	2
70	0311516	GROMMET, LIGHT 2.5" ROUND	2
71	0312309	LIGHT 6" OVAL GLO-LT STT CLR/R	4
72	0313129	HOSE, 1 SUCTION 16C4	3
73	0400005	SCREW, 6-32X1/2 PRH SS	6
74	04000381	SS BHSCS 1/4-20 X 1	1
75	0400066	SCREW, 1/4-20X3/4 HHC GR5	2
76	0400078	SCREW, 1/4-20X2 HHC GR5	2
77	0400367	NUT, 1/4-20 LOK	2
78	0400379	NUT, 5/16-18 SPR J	1
79	0400451	WASHER, 1/4	2
80	0400452	LKWASHER, 1/4	2
81	0400454	WASHER, 1/4 SS	1
82	0400491	LKWASHER, 1/2	2
83	0400492	WASHER, 1/2	2
84	0400497	WASHER, 1/2 GR8	6
85	0400498	WASHER, 1/2X2X0.125	1
86	0400900	NUT, 1/2-13 LOK JAM	2
87	0402020	SCREW, 1/4-20X3/4 HHC SS	2
88	0402021	SCREW, 1/4-20X1 HHC SS	1
89	0402043	SCREW, 3/8-16X1-1/4 HHC SS	8
90	0402094	NUT, HEX 6-32 SS	6
91	0402111	LKWASHER, 1/4 SS	3
92	0402113	NUT, 1/4-20 LOK SS	2
93	0402114	NUT, 1/4-20 LOK REV SS	1
94	0402120	WASHER, 3/8 SS	8
95	0402123	NUT, 3/8-16 LOK SS	8
96	07005922	MOUNT-HYD GAUGE	1
97	0712230	BOSS, TURNTABLE LOCK	1
98	0806994	HOUSE LOCK INDICATOR WELD	1
99	0810433	HHU CHAIN ROLLER BRACKET, LH	1
100	0810434	HHU CHAIN ROLLER BRACKET, RH	1
101	09000097	ILLUMINATED LEGEND ASSY-LT UP	1
102	09000135	ILLUMINATED LEGEND ASSY-RT UP	1
103	09001440	50K DRAG WINCH ASSY	1
104	09002243	VALVE ASSY, 1150 KNEE MAIN	1
105	09002244	VALVE ASSY, 1150 KNEE BOOM U/L	1
106	09002246	VALVE ASSY, PRESSURE REDUC	1
107	09002247	CONTROL ASSY, 11 HANDLE WV	1
108	09002910	PUMP KIT, 4K KNEE BOOM	1
109	09002949	ILLUM LEGEND LT 1150 KNEE	1
110	09003710	SUBFRAME ASSY, 1135 KNEE	1
111	09003733	WRECKER FRAME ASSY 1135	1
112	09003870	WINCH ASSY 1135 W/ 35K WINCH	1
113	09004266	U/L BOOM ASSEMBLY (SHORT)	1
114	0908418	KIT-MUDFLAP CENTURY ROTATOR	1
115	0910188	2-STAGE FRONT OUTRIGGER ASY	1
116	0910246	3-STAGE REAR OUTRIGGER ASSY	1
117	0910615	OUTRIGGER CONT VALVE KIT	1
118	0910935	XBAR ASY HRDWR-XHD 5X5 CENT	1
119	0911237	ILLUM LEGEND ASSY RH LWR WLV	1
120	0911324	RH CTL STATION ASSY 5 WINCH W	1
121	0911957	KIT, D-RING PARTS	2
122	0912071	ASSY, 1135 BOOM	1
123	124004464	ALUM HEEL PLATE-14" SDU4&COA	1
124	24773017	HOSE ASSEMBLY 140"LG	2
125	24773018	HOSE ASSEMBLY 140"LG	2
126	9018016	HOSE CLAMP HS-20 1 1/4"	4
127	9024041	SWITCH-ROCKER, LIGHTED 12V	2
128	9041402	1/2 NC X 1 1/4 HHCS PLT GR8	6
129	9041403	1/2 NC X 1 1/2 HHCS PL GR8	1
130	9402970	TOOLBOX MTG. PAD	1
131	942480011	PLATE,SLOT-SS REAR WASHER	2
132	AWS-6821-A	HOSE ASSY-PRESSURE	8
133	FC41	FITTING-90DEG BLKHD ELB W/ NUT	8
134	HC1291	FITTING, 4MJ-4MB STR THR	1

09003709, BASIC UNIT ASSEMBLY, 1135 KNEE BOOM

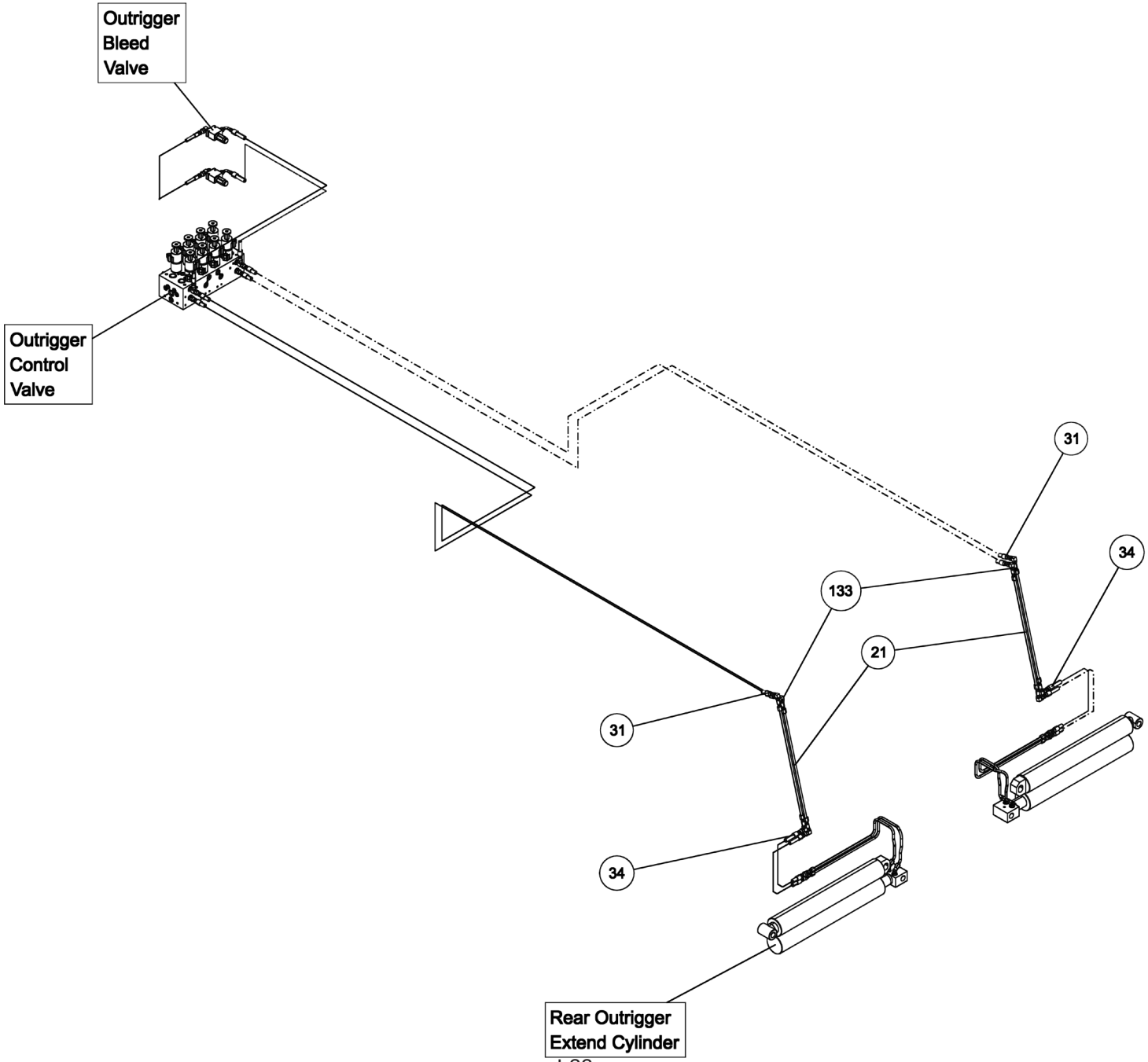

09003709, BASIC UNIT ASSEMBLY, 1135 KNEE BOOM

ITEM	PART NUMBER	DESCRIPTION	QTY
	09003709	BUA, 1135 KNEE BOOM	-
1	0300113	GREASE FITTING, 1/4-28 STR	1
2	03003419	HOSE, HYD 132" LG	1
3	03003420	HOSE, HYD 60" LG	1
4	03003421	HOSE, HYD 18"LG	4
5	03003424	HOSE, HYD 138"	1
6	03003425	HOSE, HYD 90" LG	4
7	03003426	HOSE, HYD 45" LG	6
8	0300364	CLAMP-HOSE,0.875"-2.75" 50"LBS	2
9	0300434	FITTING, HOSE BARB, 2	1
10	0300558	HOSE, SUCTION 2"ID 100R4 (C4)	1
11	0300835	KNOB-BOOM (UP-DOWN)	1
12	0300837	KNOB-BOOM (IN-OUT)	1
13	0300865	FITTING, CONNECTOR 8MJ-8MJ	1
14	0301113	HOSE HYD, 82"	2
15	0301377	FITTING, TEE,3/8" JIC	1
16	0301470	FITTING, 90ELB 6MJ-8MB90	3
17	0301473	HOSE HYD, 18" LG	1
18	0301522	ADAPTER, 6MJ-6MB	1
19	0301529	HOSE HYD, 58	2
20	03015922	STAUFF CLAMP, 3/8 TWIN	4
21	03016142	TUBE, HYD ASSY SF TO O/R	4
22	0301695	HOSE HYD, 91"	1
23	0301909	RECEPTACLE BOOT	1
24	0301946	FITTING, BLKHD CONNECT	3
25	0301947	FITTING, 45 DEG ADAPTER	1
26	0301948	HD 7 WAY TRAILER CONNECT	1
27	0301961	BALL VALVE 2	1
28	0302056	HOSE HYD, 183"	5
29	0302205	GAUGE, FLUSH MNTG-6000 PSI	2
30	0302367	PIPE NIPPLE - 2 X 4	1
31	0302372	HOSE HYD, 240" LG	4
32	0302534	FITTING, 45 DEG ELBOW	2
33	0302604	HOSE HYD, 44"	2
34	0302632	HOSE HYD, 40"	4
35	0302805	HOSE HYD, 10"	1
36	0302813	HOSE HYD, 108" LG	1
37	0302856	KNOB-TILT, 3/8-16 THREAD	1
38	0302881	HOSE HYD, 45"	1
39	0303170	HOSE, HYD. 75"	3
40	0303185	HOSE HYD, 66" LG.	4
41	0303188	HOSE HYD, 75" LG	1
42	0303339	HOSE HYD, 45" LG	1
43	0303340	HOSE HYD, 50" LG	1
44	0303379	KNOB, SWING CW - CCW	1
45	0303380	KNOB-UNDERLIFT (IN-OUT)	1
46	0303381	KNOB - UNDERLIFT (UP-DN)	1
47	0303391	HOSE 8AT2(8FJX-8FJ90) 110"	1
48	0303538	FITT, ADAPTER -BRASS 8FP-6MP	1
49	0303539	QUICK DISCONNECT 3/8 FPT	1
50	0304363	QUICK DISCONNECT 1/2 FPT	2
51	0306537	EMERGENCY SWITCH(RAMSEY)	2
52	0306540	ROTARY SELECT SWITCH OPER	1
53	0306921	PIPE PLUG, 2" SQ HD	1
54	0307052	WASHER, RUBBER 7/16X1 1/4X1/4	2
55	0307151	RUBBER FENDER	3
56	0307472	HOSE, HYD ASSY 24" LG	1
57	0307604	KNOB, RED LONG - SK0700-07	3
58	0310406	VALVE, SHUTTLE LS10-30-8T-N	1
59	0310456	PUSH BUTTN OPER W/MTG N/C	2
60	0310581	HOSE ASSY- 96" 8 fjx-10fjx90	4
61	0310956	TOOLBOX LH AL ROT TRI 2010 W/	1
62	0310957	TOOLBOX RH AL ROT TRI 2010 W/	1
63	0311191	ROLLER, POLY, 4" X 5/8"	2
64	0311417	HOSE, 196" 3/8 2 X STRAIGHT	2
65	0311426	HOSE ASSY, 80" 4FJX-4FJX45	1
66	0311500	LIGHT 6"OVAL REVERSE LED	2
67	0311502	LIGHT 6"OVAL CLEAR-AMBER LED	4
68	0311503	GROMMET, LIGHT 6" OVAL	1
69	0311514	LIGHT 2.5" CLEAR LENS-RED LED	2
70	0311516	GROMMET, LIGHT 2.5" ROUND	2
71	0312309	LIGHT 6" OVAL GLO-LT STT CLR/R	4
72	0313129	HOSE, 1 SUCTION 16C4	3
73	0400005	SCREW, 6-32X1/2 PRH SS	6
74	04000381	SS BHSCS 1/4-20 X 1	1
75	0400066	SCREW, 1/4-20X3/4 HHC GR5	2
76	0400078	SCREW, 1/4-20X2 HHC GR5	2
77	0400367	NUT, 1/4-20 LOK	2
78	0400379	NUT, 5/16-18 SPR J	1
79	0400451	WASHER, 1/4	2
80	0400452	LKWASHER, 1/4	2
81	0400454	WASHER, 1/4 SS	1
82	0400491	LKWASHER, 1/2	2
83	0400492	WASHER, 1/2	2
84	0400497	WASHER, 1/2 GR8	6
85	0400498	WASHER, 1/2X2X0.125	1
86	0400900	NUT, 1/2-13 LOK JAM	2
87	0402020	SCREW, 1/4-20X3/4 HHC SS	2
88	0402021	SCREW, 1/4-20X1 HHC SS	1
89	0402043	SCREW, 3/8-16X1-1/4 HHC SS	8
90	0402094	NUT, HEX 6-32 SS	6
91	0402111	LKWASHER, 1/4 SS	3
92	0402113	NUT, 1/4-20 LOK SS	2
93	0402114	NUT, 1/4-20 LOK REV SS	1
94	0402120	WASHER, 3/8 SS	8
95	0402123	NUT, 3/8-16 LOK SS	8
96	07005922	MOUNT-HYD GAUGE	1
97	0712230	BOSS, TURNTABLE LOCK	1
98	0806994	HOUSE LOCK INDICATOR WELD	1
99	0810433	HHU CHAIN ROLLER BRACKET, LH	1
100	0810434	HHU CHAIN ROLLER BRACKET, RH	1
101	09000097	ILLUMINATED LEGEND ASSY-LT UP	1
102	09000135	ILLUMINATED LEGEND ASSY-RT UP	1
103	09001440	50K DRAG WINCH ASSY	1
104	09002243	VALVE ASSY, 1150 KNEE MAIN	1
105	09002244	VALVE ASSY, 1150 KNEE BOOM U/L	1
106	09002246	VALVE ASSY, PRESSURE REDUC	1
107	09002247	CONTROL ASSY, 11 HANDLE WV	1
108	09002910	PUMP KIT, 4K KNEE BOOM	1
109	09002949	ILLUM LEGEND LT 1150 KNEE	1
110	09003710	SUBFRAME ASSY, 1135 KNEE	1
111	09003733	WRECKER FRAME ASSY 1135	1
112	09003870	WINCH ASSY 1135 W/ 35K WINCH	1
113	09004266	U/L BOOM ASSEMBLY (SHORT)	1
114	0908418	KIT-MUDFLAP CENTURY ROTATOR	1
115	0910188	2-STAGE FRONT OUTRIGGER ASY	1
116	0910246	3-STAGE REAR OUTRIGGER ASSY	1
117	0910615	OUTRIGGER CONT VALVE KIT	1
118	0910935	XBAR ASY HRDWR-XHD 5X5 CENT	1
119	0911237	ILLUM LEGEND ASSY RH LWR WLV	1
120	0911324	RH CTL STATION ASSY 5 WINCH W	1
121	0911957	KIT, D-RING PARTS	2
122	0912071	ASSY, 1135 BOOM	1
123	124004464	ALUM HEEL PLATE-14" SDU4&COA	1
124	24773017	HOSE ASSEMBLY 140"LG	2
125	24773018	HOSE ASSEMBLY 140"LG	2
126	9018016	HOSE CLAMP HS-20 1 1/4"	4
127	9024041	SWITCH-ROCKER, LIGHTED 12V	2
128	9041402	1/2 NC X 1 1/4 HHCS PLT GR8	6
129	9041403	1/2 NC X 1 1/2 HHCS PL GR8	1
130	9402970	TOOLBOX MTG. PAD	1
131	942480011	PLATE,SLOT-SS REAR WASHER	2
132	AWS-6821-A	HOSE ASSY-PRESSURE	8
133	FC41	FITTING-90DEG BLKHD ELB W/ NUT	8
134	HC1291	FITTING, 4MJ-4MB STR THR	1

09003709, BASIC UNIT ASSEMBLY, 1135 KNEE BOOM

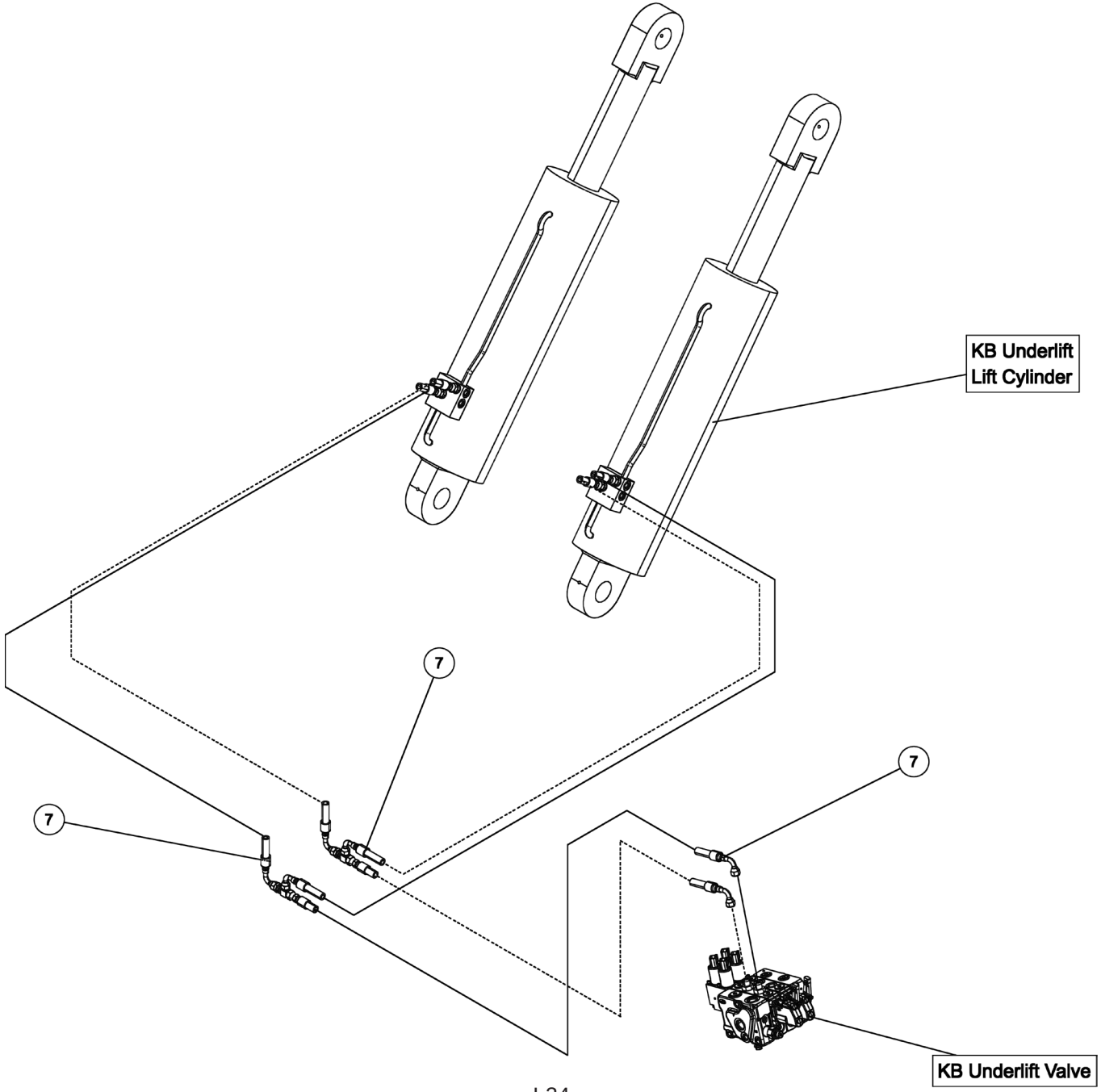

09003709, BASIC UNIT ASSEMBLY, 1135 KNEE BOOM

ITEM	PART NUMBER	DESCRIPTION	QTY
	09003709	BUA, 1135 KNEE BOOM	-
1	0300113	GREASE FITTING, 1/4-28 STR	1
2	03003419	HOSE, HYD 132" LG	1
3	03003420	HOSE, HYD 60" LG	1
4	03003421	HOSE, HYD 18"LG	4
5	03003424	HOSE, HYD 138"	1
6	03003425	HOSE, HYD 90" LG	4
7	03003426	HOSE, HYD 45" LG	6
8	0300364	CLAMP-HOSE,0.875"-2.75" 50"LBS	2
9	0300434	FITTING, HOSE BARB, 2	1
10	0300558	HOSE, SUCTION 2"ID 100R4 (C4)	1
11	0300835	KNOB-BOOM (UP-DOWN)	1
12	0300837	KNOB-BOOM (IN-OUT)	1
13	0300865	FITTING, CONNECTOR 8MJ-8MJ	1
14	0301113	HOSE HYD, 82"	2
15	0301377	FITTING, TEE,3/8" JIC	1
16	0301470	FITTING, 90ELB 6MJ-8MB90	3
17	0301473	HOSE HYD, 18" LG	1
18	0301522	ADAPTER, 6MJ-6MB	1
19	0301529	HOSE HYD, 58	2
20	03015922	STAUFF CLAMP, 3/8 TWIN	4
21	03016142	TUBE, HYD ASSY SF TO O/R	4
22	0301695	HOSE HYD, 91"	1
23	0301909	RECEPTACLE BOOT	1
24	0301946	FITTING, BLKHD CONNECT	3
25	0301947	FITTING, 45 DEG ADAPTER	1
26	0301948	HD 7 WAY TRAILER CONNECT	1
27	0301961	BALL VALVE 2	1
28	0302056	HOSE HYD, 183"	5
29	0302205	GAUGE, FLUSH MNTG-6000 PSI	2
30	0302367	PIPE NIPPLE - 2 X 4	1
31	0302372	HOSE HYD, 240" LG	4
32	0302534	FITTING, 45 DEG ELBOW	2
33	0302604	HOSE HYD, 44"	2
34	0302632	HOSE HYD, 40"	4
35	0302805	HOSE HYD, 10"	1
36	0302813	HOSE HYD, 108" LG	1
37	0302856	KNOB-TILT, 3/8-16 THREAD	1
38	0302881	HOSE HYD, 45"	1
39	0303170	HOSE, HYD. 75"	3
40	0303185	HOSE HYD, 66" LG.	4
41	0303188	HOSE HYD, 75" LG	1
42	0303339	HOSE HYD, 45" LG	1
43	0303340	HOSE HYD, 50" LG	1
44	0303379	KNOB, SWING CW - CCW	1
45	0303380	KNOB-UNDERLIFT (IN-OUT)	1
46	0303381	KNOB - UNDERLIFT (UP-DN)	1
47	0303391	HOSE 8AT2(8FJX-8FJ90) 110"	1
48	0303538	FITT, ADAPTER -BRASS 8FP-6MP	1
49	0303539	QUICK DISCONNECT 3/8 FPT	1
50	0304363	QUICK DISCONNECT 1/2 FPT	2
51	0306537	EMERGENCY SWITCH(RAMSEY)	2
52	0306540	ROTARY SELECT SWITCH OPER	1
53	0306921	PIPE PLUG, 2" SQ HD	1
54	0307052	WASHER, RUBBER 7/16X1 1/4X1/4	2
55	0307151	RUBBER FENDER	3
56	0307472	HOSE, HYD ASSY 24" LG	1
57	0307604	KNOB, RED LONG - SK0700-07	3
58	0310406	VALVE, SHUTTLE LS10-30-8T-N	1
59	0310456	PUSH BUTTN OPER W/MTG N/C	2
60	0310581	HOSE ASSY- 96" 8 fjx-10fjx90	4
61	0310956	TOOLBOX LH AL ROT TRI 2010 W/	1
62	0310957	TOOLBOX RH AL ROT TRI 2010 W/	1
63	0311191	ROLLER, POLY, 4" X 5/8"	2
64	0311417	HOSE, 196" 3/8 2 X STRAIGHT	2
65	0311426	HOSE ASSY, 80" 4FJX-4FJX45	1
66	0311500	LIGHT 6"OVAL REVERSE LED	2
67	0311502	LIGHT 6"OVAL CLEAR-AMBER LED	4
68	0311503	GROMMET, LIGHT 6" OVAL	1
69	0311514	LIGHT 2.5" CLEAR LENS-RED LED	2
70	0311516	GROMMET, LIGHT 2.5" ROUND	2
71	0312309	LIGHT 6" OVAL GLO-LT STT CLR/R	4
72	0313129	HOSE, 1 SUCTION 16C4	3
73	0400005	SCREW, 6-32X1/2 PRH SS	6
74	04000381	SS BHSCS 1/4-20 X 1	1
75	0400066	SCREW, 1/4-20X3/4 HHC GR5	2
76	0400078	SCREW, 1/4-20X2 HHC GR5	2
77	0400367	NUT, 1/4-20 LOK	2
78	0400379	NUT, 5/16-18 SPR J	1
79	0400451	WASHER, 1/4	2
80	0400452	LKWASHER, 1/4	2
81	0400454	WASHER, 1/4 SS	1
82	0400491	LKWASHER, 1/2	2
83	0400492	WASHER, 1/2	2
84	0400497	WASHER, 1/2 GR8	6
85	0400498	WASHER, 1/2X2X0.125	1
86	0400900	NUT, 1/2-13 LOK JAM	2
87	0402020	SCREW, 1/4-20X3/4 HHC SS	2
88	0402021	SCREW, 1/4-20X1 HHC SS	1
89	0402043	SCREW, 3/8-16X1-1/4 HHC SS	8
90	0402094	NUT, HEX 6-32 SS	6
91	0402111	LKWASHER, 1/4 SS	3
92	0402113	NUT, 1/4-20 LOK SS	2
93	0402114	NUT, 1/4-20 LOK REV SS	1
94	0402120	WASHER, 3/8 SS	8
95	0402123	NUT, 3/8-16 LOK SS	8
96	07005922	MOUNT-HYD GAUGE	1
97	0712230	BOSS, TURNTABLE LOCK	1
98	0806994	HOUSE LOCK INDICATOR WELD	1
99	0810433	HHU CHAIN ROLLER BRACKET, LH	1
100	0810434	HHU CHAIN ROLLER BRACKET, RH	1
101	09000097	ILLUMINATED LEGEND ASSY-LT UP	1
102	09000135	ILLUMINATED LEGEND ASSY-RT UP	1
103	09001440	50K DRAG WINCH ASSY	1
104	09002243	VALVE ASSY, 1150 KNEE MAIN	1
105	09002244	VALVE ASSY, 1150 KNEE BOOM U/L	1
106	09002246	VALVE ASSY, PRESSURE REDUC	1
107	09002247	CONTROL ASSY, 11 HANDLE WV	1
108	09002910	PUMP KIT, 4K KNEE BOOM	1
109	09002949	ILLUM LEGEND LT 1150 KNEE	1
110	09003710	SUBFRAME ASSY, 1135 KNEE	1
111	09003733	WRECKER FRAME ASSY 1135	1
112	09003870	WINCH ASSY 1135 W/ 35K WINCH	1
113	09004266	U/L BOOM ASSEMBLY (SHORT)	1
114	0908418	KIT-MUDFLAP CENTURY ROTATOR	1
115	0910188	2-STAGE FRONT OUTRIGGER ASY	1
116	0910246	3-STAGE REAR OUTRIGGER ASSY	1
117	0910615	OUTRIGGER CONT VALVE KIT	1
118	0910935	XBAR ASY HRDWR-XHD 5X5 CENT	1
119	0911237	ILLUM LEGEND ASSY RH LWR WLV	1
120	0911324	RH CTL STATION ASSY 5 WINCH W	1
121	0911957	KIT, D-RING PARTS	2
122	0912071	ASSY, 1135 BOOM	1
123	124004464	ALUM HEEL PLATE-14" SDU4&COA	1
124	24773017	HOSE ASSEMBLY 140"LG	2
125	24773018	HOSE ASSEMBLY 140"LG	2
126	9018016	HOSE CLAMP HS-20 1 1/4"	4
127	9024041	SWITCH-ROCKER, LIGHTED 12V	2
128	9041402	1/2 NC X 1 1/4 HHCS PLT GR8	6
129	9041403	1/2 NC X 1 1/2 HHCS PL GR8	1
130	9402970	TOOLBOX MTG. PAD	1
131	942480011	PLATE,SLOT-SS REAR WASHER	2
132	AWS-6821-A	HOSE ASSY-PRESSURE	8
133	FC41	FITTING-90DEG BLKHD ELB W/ NUT	8
134	HC1291	FITTING, 4MJ-4MB STR THR	1

09003709, BASIC UNIT ASSEMBLY, 1135 KNEE BOOM

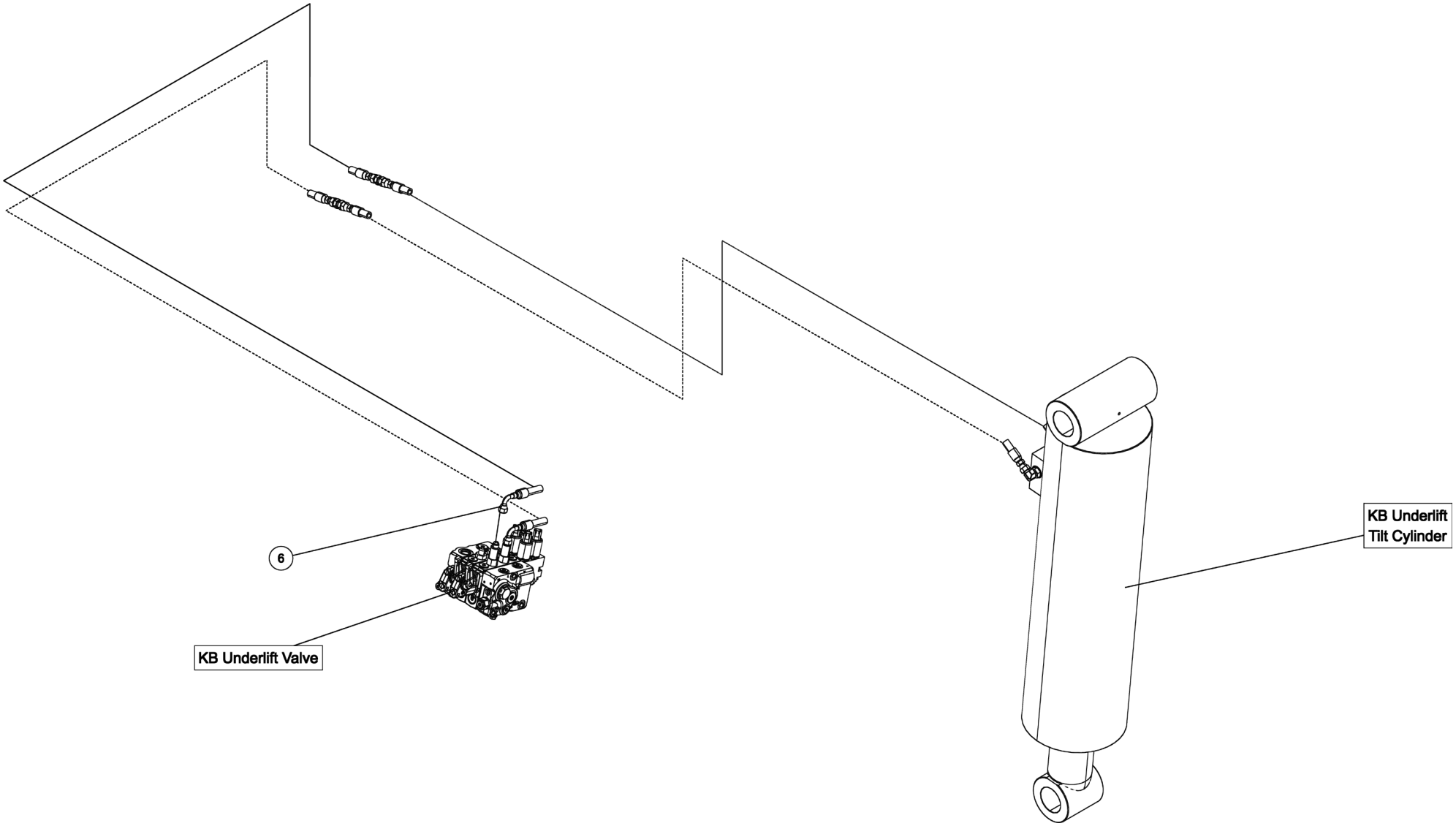

09003709, BASIC UNIT ASSEMBLY, 1135 KNEE BOOM

ITEM	PART NUMBER	DESCRIPTION	QTY
	09003709	BUA, 1135 KNEE BOOM	-
1	0300113	GREASE FITTING, 1/4-28 STR	1
2	03003419	HOSE, HYD 132" LG	1
3	03003420	HOSE, HYD 60" LG	1
4	03003421	HOSE, HYD 18"LG	4
5	03003424	HOSE, HYD 138"	1
6	03003425	HOSE, HYD 90" LG	4
7	03003426	HOSE, HYD 45" LG	6
8	0300364	CLAMP-HOSE,0.875"-2.75" 50"LBS	2
9	0300434	FITTING, HOSE BARB, 2	1
10	0300558	HOSE, SUCTION 2"ID 100R4 (C4)	1
11	0300835	KNOB-BOOM (UP-DOWN)	1
12	0300837	KNOB-BOOM (IN-OUT)	1
13	0300865	FITTING, CONNECTOR 8MJ-8MJ	1
14	0301113	HOSE HYD, 82"	2
15	0301377	FITTING, TEE,3/8" JIC	1
16	0301470	FITTING, 90ELB 6MJ-8MB90	3
17	0301473	HOSE HYD, 18" LG	1
18	0301522	ADAPTER, 6MJ-6MB	1
19	0301529	HOSE HYD, 58	2
20	03015922	STAUFF CLAMP, 3/8 TWIN	4
21	03016142	TUBE, HYD ASSY SF TO O/R	4
22	0301695	HOSE HYD, 91"	1
23	0301909	RECEPTACLE BOOT	1
24	0301946	FITTING, BLKHD CONNECT	3
25	0301947	FITTING, 45 DEG ADAPTER	1
26	0301948	HD 7 WAY TRAILER CONNECT	1
27	0301961	BALL VALVE 2	1
28	0302056	HOSE HYD, 183"	5
29	0302205	GAUGE, FLUSH MNTG-6000 PSI	2
30	0302367	PIPE NIPPLE - 2 X 4	1
31	0302372	HOSE HYD, 240" LG	4
32	0302534	FITTING, 45 DEG ELBOW	2
33	0302604	HOSE HYD, 44"	2
34	0302632	HOSE HYD, 40"	4
35	0302805	HOSE HYD, 10"	1
36	0302813	HOSE HYD, 108" LG	1
37	0302856	KNOB-TILT, 3/8-16 THREAD	1
38	0302881	HOSE HYD, 45"	1
39	0303170	HOSE, HYD. 75"	3
40	0303185	HOSE HYD, 66" LG.	4
41	0303188	HOSE HYD, 75" LG	1
42	0303339	HOSE HYD, 45" LG	1
43	0303340	HOSE HYD, 50" LG	1
44	0303379	KNOB, SWING CW - CCW	1
45	0303380	KNOB-UNDERLIFT (IN-OUT)	1

ITEM	PART NUMBER	DESCRIPTION	QTY
46	0303381	KNOB - UNDERLIFT (UP-DN)	1
47	0303391	HOSE 8AT2(8FJX-8FJ90) 110"	1
48	0303538	FITT, ADAPTER -BRASS 8FP-6MP	1
49	0303539	QUICK DISCONNECT 3/8 FPT	1
50	0304363	QUICK DISCONNECT 1/2 FPT	2
51	0306537	EMERGENCY SWITCH(RAMSEY)	2
52	0306540	ROTARY SELECT SWITCH OPER	1
53	0306921	PIPE PLUG, 2" SQ HD	1
54	0307052	WASHER, RUBBER 7/16X1 1/4X1/4	2
55	0307151	RUBBER FENDER	3
56	0307472	HOSE, HYD ASSY 24" LG	1
57	0307604	KNOB, RED LONG - SK0700-07	3
58	0310406	VALVE, SHUTTLE LS10-30-8T-N	1
59	0310456	PUSH BUTTN OPER W/MTG N/C	2
60	0310581	HOSE ASSY- 96" 8 fjx-10fjx90	4
61	0310956	TOOLBOX LH AL ROT TRI 2010 W/	1
62	0310957	TOOLBOX RH AL ROT TRI 2010 W/	1
63	0311191	ROLLER, POLY, 4" X 5/8"	2
64	0311417	HOSE, 196" 3/8 2 X STRAIGHT	2
65	0311426	HOSE ASSY, 80" 4FJX-4FJX45	1
66	0311500	LIGHT 6"OVAL REVERSE LED	2
67	0311502	LIGHT 6"OVAL CLEAR-AMBER LED	4
68	0311503	GROMMET, LIGHT 6" OVAL	1
69	0311514	LIGHT 2.5" CLEAR LENS-RED LED	2
70	0311516	GROMMET, LIGHT 2.5" ROUND	2
71	0312309	LIGHT 6" OVAL GLO-LT STT CLR/R	4
72	0313129	HOSE, 1 SUCTION 16C4	3
73	0400005	SCREW, 6-32X1/2 PRH SS	6
74	04000381	SS BHSCS 1/4-20 X 1	1
75	0400066	SCREW, 1/4-20X3/4 HHC GR5	2
76	0400078	SCREW, 1/4-20X2 HHC GR5	2
77	0400367	NUT, 1/4-20 LOK	2
78	0400379	NUT, 5/16-18 SPR J	1
79	0400451	WASHER, 1/4	2
80	0400452	LKWASHER, 1/4	2
81	0400454	WASHER, 1/4 SS	1
82	0400491	LKWASHER, 1/2	2
83	0400492	WASHER, 1/2	2
84	0400497	WASHER, 1/2 GR8	6
85	0400498	WASHER, 1/2X2X0.125	1
86	0400900	NUT, 1/2-13 LOK JAM	2
87	0402020	SCREW, 1/4-20X3/4 HHC SS	2
88	0402021	SCREW, 1/4-20X1 HHC SS	1
89	0402043	SCREW, 3/8-16X1-1/4 HHC SS	8
90	0402094	NUT, HEX 6-32 SS	6
91	0402111	LKWASHER, 1/4 SS	3

ITEM	PART NUMBER	DESCRIPTION	QTY
92	0402113	NUT, 1/4-20 LOK SS	2
93	0402114	NUT, 1/4-20 LOK REV SS	1
94	0402120	WASHER, 3/8 SS	8
95	0402123	NUT, 3/8-16 LOK SS	8
96	07005922	MOUNT-HYD GAUGE	1
97	0712230	BOSS, TURNTABLE LOCK	1
98	0806994	HOUSE LOCK INDICATOR WELD	1
99	0810433	HHU CHAIN ROLLER BRACKET, LH	1
100	0810434	HHU CHAIN ROLLER BRACKET, RH	1
101	09000097	ILLUMINATED LEGEND ASSY-LT UP	1
102	09000135	ILLUMINATED LEGEND ASSY-RT UP	1
103	09001440	50K DRAG WINCH ASSY	1
104	09002243	VALVE ASSY, 1150 KNEE MAIN	1
105	09002244	VALVE ASSY, 1150 KNEE BOOM U/L	1
106	09002246	VALVE ASSY, PRESSURE REDUC	1
107	09002247	CONTROL ASSY, 11 HANDLE WV	1
108	09002910	PUMP KIT, 4K KNEE BOOM	1
109	09002949	ILLUM LEGEND LT 1150 KNEE	1
110	09003710	SUBFRAME ASSY, 1135 KNEE	1
111	09003733	WRECKER FRAME ASSY 1135	1
112	09003870	WINCH ASSY 1135 W/ 35K WINCH	1
113	09004266	U/L BOOM ASSEMBLY (SHORT)	1
114	0908418	KIT-MUDFLAP CENTURY ROTATOR	1
115	0910188	2-STAGE FRONT OUTRIGGER ASY	1
116	0910246	3-STAGE REAR OUTRIGGER ASSY	1
117	0910615	OUTRIGGER CONT VALVE KIT	1
118	0910935	XBAR ASY HRDWR-XHD 5X5 CENT	1
119	0911237	ILLUM LEGEND ASSY RH LWR WLV	1
120	0911324	RH CTL STATION ASSY 5 WINCH W	1
121	0911957	KIT, D-RING PARTS	2
122	0912071	ASSY, 1135 BOOM	1
123	124004464	ALUM HEEL PLATE-14" SDU4&COA	1
124	24773017	HOSE ASSEMBLY 140"LG	2
125	24773018	HOSE ASSEMBLY 140"LG	2
126	9018016	HOSE CLAMP HS-20 1 1/4"	4
127	9024041	SWITCH-ROCKER, LIGHTED 12V	2
128	9041402	1/2 NC X 1 1/4 HHCS PLT GR8	6
129	9041403	1/2 NC X 1 1/2 HHCS PL GR8	1
130	9402970	TOOLBOX MTG. PAD	1
131	942480011	PLATE,SLOT-SS REAR WASHER	2
132	AWS-6821-A	HOSE ASSY-PRESSURE	8
133	FC41	FITTING-90DEG BLKHD ELB W/ NUT	8
134	HC1291	FITTING, 4MJ-4MB STR THR	1

09003709, BASIC UNIT ASSEMBLY, 1135 KNEE BOOM

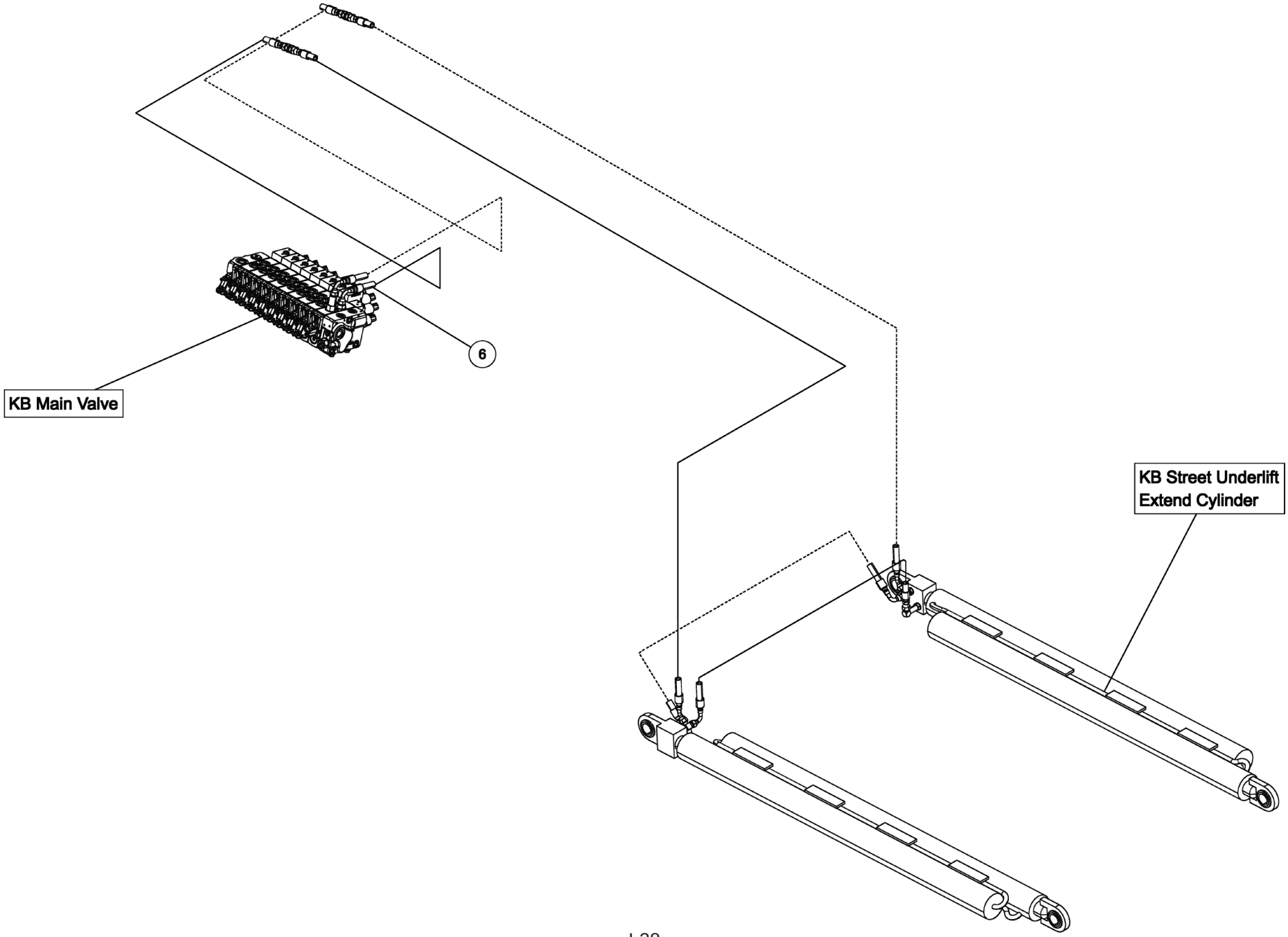

09003709, BASIC UNIT ASSEMBLY, 1135 KNEE BOOM

ITEM	PART NUMBER	DESCRIPTION	QTY
	09003709	BUA, 1135 KNEE BOOM	-
1	0300113	GREASE FITTING, 1/4-28 STR	1
2	03003419	HOSE, HYD 132" LG	1
3	03003420	HOSE, HYD 60" LG	1
4	03003421	HOSE, HYD 18"LG	4
5	03003424	HOSE, HYD 138"	1
6	03003425	HOSE, HYD 90" LG	4
7	03003426	HOSE, HYD 45" LG	6
8	0300364	CLAMP-HOSE,0.875"-2.75" 50"LBS	2
9	0300434	FITTING, HOSE BARB, 2	1
10	0300558	HOSE, SUCTION 2"ID 100R4 (C4)	1
11	0300835	KNOB-BOOM (UP-DOWN)	1
12	0300837	KNOB-BOOM (IN-OUT)	1
13	0300865	FITTING, CONNECTOR 8MJ-8MJ	1
14	0301113	HOSE HYD, 82"	2
15	0301377	FITTING, TEE,3/8" JIC	1
16	0301470	FITTING, 90ELB 6MJ-8MB90	3
17	0301473	HOSE HYD, 18" LG	1
18	0301522	ADAPTER, 6MJ-6MB	1
19	0301529	HOSE HYD, 58	2
20	03015922	STAUFF CLAMP, 3/8 TWIN	4
21	03016142	TUBE, HYD ASSY SF TO O/R	4
22	0301695	HOSE HYD, 91"	1
23	0301909	RECEPTACLE BOOT	1
24	0301946	FITTING, BLKHD CONNECT	3
25	0301947	FITTING, 45 DEG ADAPTER	1
26	0301948	HD 7 WAY TRAILER CONNECT	1
27	0301961	BALL VALVE 2	1
28	0302056	HOSE HYD, 183"	5
29	0302205	GAUGE, FLUSH MNTG-6000 PSI	2
30	0302367	PIPE NIPPLE - 2 X 4	1
31	0302372	HOSE HYD, 240" LG	4
32	0302534	FITTING, 45 DEG ELBOW	2
33	0302604	HOSE HYD, 44"	2
34	0302632	HOSE HYD, 40"	4
35	0302805	HOSE HYD, 10"	1
36	0302813	HOSE HYD, 108" LG	1
37	0302856	KNOB-TILT, 3/8-16 THREAD	1
38	0302881	HOSE HYD, 45"	1
39	0303170	HOSE, HYD. 75"	3
40	0303185	HOSE HYD, 66" LG.	4
41	0303188	HOSE HYD, 75" LG	1
42	0303339	HOSE HYD, 45" LG	1
43	0303340	HOSE HYD, 50" LG	1
44	0303379	KNOB, SWING CW - CCW	1
45	0303380	KNOB-UNDERLIFT (IN-OUT)	1

ITEM	PART NUMBER	DESCRIPTION	QTY
46	0303381	KNOB - UNDERLIFT (UP-DN)	1
47	0303391	HOSE 8AT2(8FJX-8FJ90) 110"	1
48	0303538	FITT, ADAPTER -BRASS 8FP-6MP	1
49	0303539	QUICK DISCONNECT 3/8 FPT	1
50	0304363	QUICK DISCONNECT 1/2 FPT	2
51	0306537	EMERGENCY SWITCH(RAMSEY)	2
52	0306540	ROTARY SELECT SWITCH OPER	1
53	0306921	PIPE PLUG, 2" SQ HD	1
54	0307052	WASHER, RUBBER 7/16X1 1/4X1/4	2
55	0307151	RUBBER FENDER	3
56	0307472	HOSE, HYD ASSY 24" LG	1
57	0307604	KNOB, RED LONG - SK0700-07	3
58	0310406	VALVE, SHUTTLE LS10-30-8T-N	1
59	0310456	PUSH BUTTN OPER W/MTG N/C	2
60	0310581	HOSE ASSY- 96" 8 fjx-10fjx90	4
61	0310956	TOOLBOX LH AL ROT TRI 2010 W/	1
62	0310957	TOOLBOX RH AL ROT TRI 2010 W/	1
63	0311191	ROLLER, POLY, 4" X 5/8"	2
64	0311417	HOSE, 196" 3/8 2 X STRAIGHT	2
65	0311426	HOSE ASSY, 80" 4FJX-4FJX45	1
66	0311500	LIGHT 6"OVAL REVERSE LED	2
67	0311502	LIGHT 6"OVAL CLEAR-AMBER LED	4
68	0311503	GROMMET, LIGHT 6" OVAL	1
69	0311514	LIGHT 2.5" CLEAR LENS-RED LED	2
70	0311516	GROMMET, LIGHT 2.5" ROUND	2
71	0312309	LIGHT 6" OVAL GLO-LT STT CLR/R	4
72	0313129	HOSE, 1 SUCTION 16C4	3
73	0400005	SCREW, 6-32X1/2 PRH SS	6
74	04000381	SS BHSCS 1/4-20 X 1	1
75	0400066	SCREW, 1/4-20X3/4 HHC GR5	2
76	0400078	SCREW, 1/4-20X2 HHC GR5	2
77	0400367	NUT, 1/4-20 LOK	2
78	0400379	NUT, 5/16-18 SPR J	1
79	0400451	WASHER, 1/4	2
80	0400452	LKWASHER, 1/4	2
81	0400454	WASHER, 1/4 SS	1
82	0400491	LKWASHER, 1/2	2
83	0400492	WASHER, 1/2	2
84	0400497	WASHER, 1/2 GR8	6
85	0400498	WASHER, 1/2X2X0.125	1
86	0400900	NUT, 1/2-13 LOK JAM	2
87	0402020	SCREW, 1/4-20X3/4 HHC SS	2
88	0402021	SCREW, 1/4-20X1 HHC SS	1
89	0402043	SCREW, 3/8-16X1-1/4 HHC SS	8
90	0402094	NUT, HEX 6-32 SS	6
91	0402111	LKWASHER, 1/4 SS	3

ITEM	PART NUMBER	DESCRIPTION	QTY
92	0402113	NUT, 1/4-20 LOK SS	2
93	0402114	NUT, 1/4-20 LOK REV SS	1
94	0402120	WASHER, 3/8 SS	8
95	0402123	NUT, 3/8-16 LOK SS	8
96	07005922	MOUNT-HYD GAUGE	1
97	0712230	BOSS, TURNTABLE LOCK	1
98	0806994	HOUSE LOCK INDICATOR WELD	1
99	0810433	HHU CHAIN ROLLER BRACKET, LH	1
100	0810434	HHU CHAIN ROLLER BRACKET, RH	1
101	09000097	ILLUMINATED LEGEND ASSY-LT UP	1
102	09000135	ILLUMINATED LEGEND ASSY-RT UP	1
103	09001440	50K DRAG WINCH ASSY	1
104	09002243	VALVE ASSY, 1150 KNEE MAIN	1
105	09002244	VALVE ASSY, 1150 KNEE BOOM U/L	1
106	09002246	VALVE ASSY, PRESSURE REDUC	1
107	09002247	CONTROL ASSY, 11 HANDLE WV	1
108	09002910	PUMP KIT, 4K KNEE BOOM	1
109	09002949	ILLUM LEGEND LT 1150 KNEE	1
110	09003710	SUBFRAME ASSY, 1135 KNEE	1
111	09003733	WRECKER FRAME ASSY 1135	1
112	09003870	WINCH ASSY 1135 W/ 35K WINCH	1
113	09004266	U/L BOOM ASSEMBLY (SHORT)	1
114	0908418	KIT-MUDFLAP CENTURY ROTATOR	1
115	0910188	2-STAGE FRONT OUTRIGGER ASY	1
116	0910246	3-STAGE REAR OUTRIGGER ASSY	1
117	0910615	OUTRIGGER CONT VALVE KIT	1
118	0910935	XBAR ASY HRDWR-XHD 5X5 CENT	1
119	0911237	ILLUM LEGEND ASSY RH LWR WLV	1
120	0911324	RH CTL STATION ASSY 5 WINCH W	1
121	0911957	KIT, D-RING PARTS	2
122	0912071	ASSY, 1135 BOOM	1
123	124004464	ALUM HEEL PLATE-14" SDU4&COA	1
124	24773017	HOSE ASSEMBLY 140"LG	2
125	24773018	HOSE ASSEMBLY 140"LG	2
126	9018016	HOSE CLAMP HS-20 1 1/4"	4
127	9024041	SWITCH-ROCKER, LIGHTED 12V	2
128	9041402	1/2 NC X 1 1/4 HHCS PLT GR8	6
129	9041403	1/2 NC X 1 1/2 HHCS PL GR8	1
130	9402970	TOOLBOX MTG. PAD	1
131	942480011	PLATE,SLOT-SS REAR WASHER	2
132	AWS-6821-A	HOSE ASSY-PRESSURE	8
133	FC41	FITTING-90DEG BLKHD ELB W/ NUT	8
134	HC1291	FITTING, 4MJ-4MB STR THR	1

09003709, BASIC UNIT ASSEMBLY, 1135 KNEE BOOM

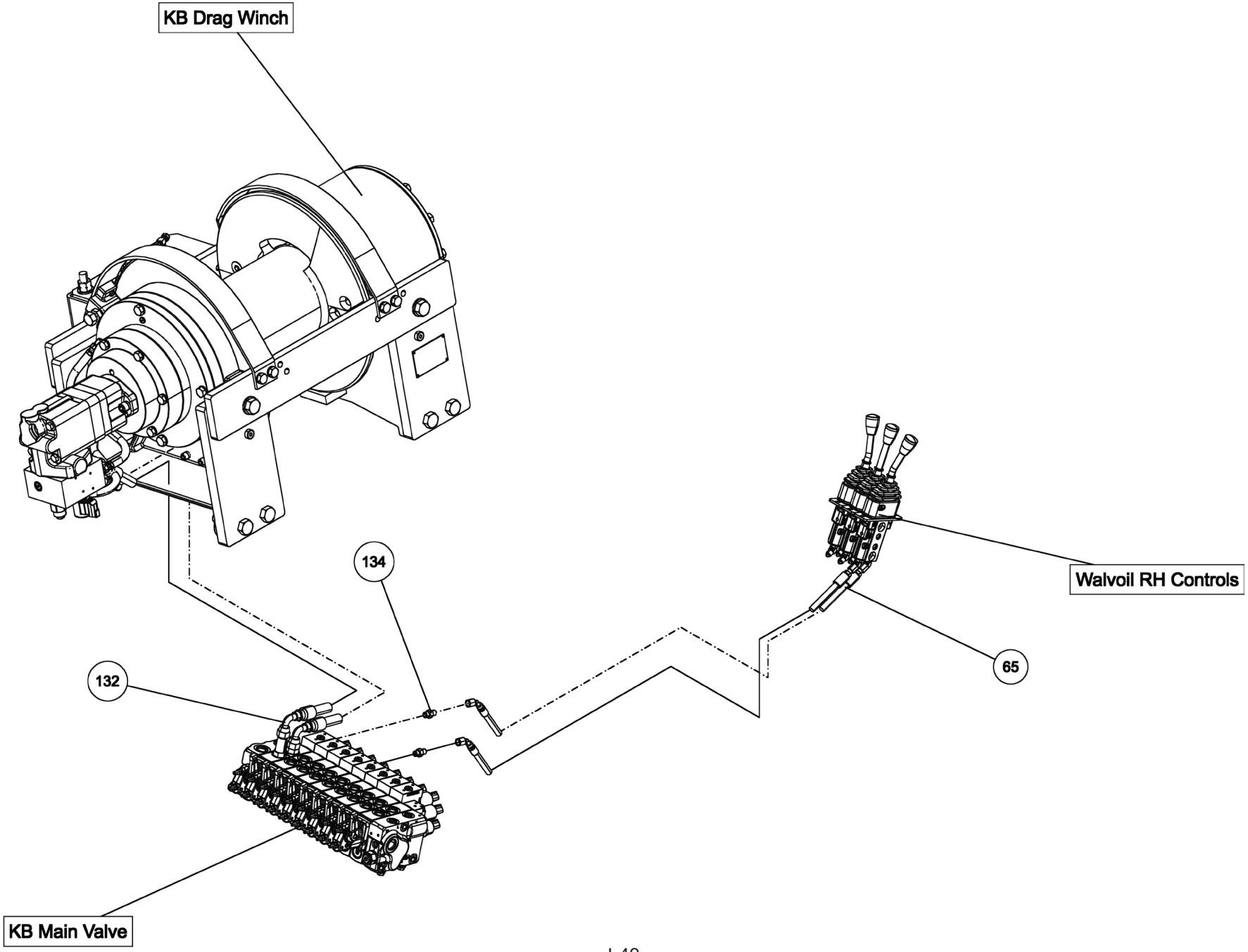

09003709, BASIC UNIT ASSEMBLY, 1135 KNEE BOOM

ITEM	PART NUMBER	DESCRIPTION	QTY
	09003709	BUA, 1135 KNEE BOOM	-
1	0300113	GREASE FITTING, 1/4-28 STR	1
2	03003419	HOSE, HYD 132" LG	1
3	03003420	HOSE, HYD 60" LG	1
4	03003421	HOSE, HYD 18"LG	4
5	03003424	HOSE, HYD 138"	1
6	03003425	HOSE, HYD 90" LG	4
7	03003426	HOSE, HYD 45" LG	6
8	0300364	CLAMP-HOSE,0.875"-2.75" 50"LBS	2
9	0300434	FITTING, HOSE BARB, 2	1
10	0300558	HOSE, SUCTION 2"ID 100R4 (C4)	1
11	0300835	KNOB-BOOM (UP-DOWN)	1
12	0300837	KNOB-BOOM (IN-OUT)	1
13	0300865	FITTING, CONNECTOR 8MJ-8MJ	1
14	0301113	HOSE HYD, 82"	2
15	0301377	FITTING, TEE,3/8" JIC	1
16	0301470	FITTING, 90ELB 6MJ-8MB90	3
17	0301473	HOSE HYD, 18" LG	1
18	0301522	ADAPTER, 6MJ-6MB	1
19	0301529	HOSE HYD, 58	2
20	03015922	STAUFF CLAMP, 3/8 TWIN	4
21	03016142	TUBE, HYD ASSY SF TO O/R	4
22	0301695	HOSE HYD, 91"	1
23	0301909	RECEPTACLE BOOT	1
24	0301946	FITTING, BLKHD CONNECT	3
25	0301947	FITTING, 45 DEG ADAPTER	1
26	0301948	HD 7 WAY TRAILER CONNECT	1
27	0301961	BALL VALVE 2	1
28	0302056	HOSE HYD, 183"	5
29	0302205	GAUGE, FLUSH MNTG-6000 PSI	2
30	0302367	PIPE NIPPLE - 2 X 4	1
31	0302372	HOSE HYD, 240" LG	4
32	0302534	FITTING, 45 DEG ELBOW	2
33	0302604	HOSE HYD, 44"	2
34	0302632	HOSE HYD, 40"	4
35	0302805	HOSE HYD, 10"	1
36	0302813	HOSE HYD, 108" LG	1
37	0302856	KNOB-TILT, 3/8-16 THREAD	1
38	0302881	HOSE HYD, 45"	1
39	0303170	HOSE, HYD. 75"	3
40	0303185	HOSE HYD, 66" LG.	4
41	0303188	HOSE HYD, 75" LG	1
42	0303339	HOSE HYD, 45" LG	1
43	0303340	HOSE HYD, 50" LG	1
44	0303379	KNOB, SWING CW - CCW	1
45	0303380	KNOB-UNDERLIFT (IN-OUT)	1

ITEM	PART NUMBER	DESCRIPTION	QTY
46	0303381	KNOB - UNDERLIFT (UP-DN)	1
47	0303391	HOSE 8AT2(8FJX-8FJ90) 110"	1
48	0303538	FITT, ADAPTER -BRASS 8FP-6MP	1
49	0303539	QUICK DISCONNECT 3/8 FPT	1
50	0304363	QUICK DISCONNECT 1/2 FPT	2
51	0306537	EMERGENCY SWITCH(RAMSEY)	2
52	0306540	ROTARY SELECT SWITCH OPER	1
53	0306921	PIPE PLUG, 2" SQ HD	1
54	0307052	WASHER, RUBBER 7/16X1 1/4X1/4	2
55	0307151	RUBBER FENDER	3
56	0307472	HOSE, HYD ASSY 24" LG	1
57	0307604	KNOB, RED LONG - SK0700-07	3
58	0310406	VALVE, SHUTTLE LS10-30-8T-N	1
59	0310456	PUSH BUTTN OPER W/MTG N/C	2
60	0310581	HOSE ASSY- 96" 8 fjx-10fjx90	4
61	0310956	TOOLBOX LH AL ROT TRI 2010 W/	1
62	0310957	TOOLBOX RH AL ROT TRI 2010 W/	1
63	0311191	ROLLER, POLY, 4" X 5/8"	2
64	0311417	HOSE, 196" 3/8 2 X STRAIGHT	2
65	0311426	HOSE ASSY, 80" 4FJX-4FJX45	1
66	0311500	LIGHT 6"OVAL REVERSE LED	2
67	0311502	LIGHT 6"OVAL CLEAR-AMBER LED	4
68	0311503	GROMMET, LIGHT 6" OVAL	1
69	0311514	LIGHT 2.5" CLEAR LENS-RED LED	2
70	0311516	GROMMET, LIGHT 2.5" ROUND	2
71	0312309	LIGHT 6" OVAL GLO-LT STT CLR/R	4
72	0313129	HOSE, 1 SUCTION 16C4	3
73	0400005	SCREW, 6-32X1/2 PRH SS	6
74	04000381	SS BHSCS 1/4-20 X 1	1
75	0400066	SCREW, 1/4-20X3/4 HHC GR5	2
76	0400078	SCREW, 1/4-20X2 HHC GR5	2
77	0400367	NUT, 1/4-20 LOK	2
78	0400379	NUT, 5/16-18 SPR J	1
79	0400451	WASHER, 1/4	2
80	0400452	LKWASHER, 1/4	2
81	0400454	WASHER, 1/4 SS	1
82	0400491	LKWASHER, 1/2	2
83	0400492	WASHER, 1/2	2
84	0400497	WASHER, 1/2 GR8	6
85	0400498	WASHER, 1/2X2X0.125	1
86	0400900	NUT, 1/2-13 LOK JAM	2
87	0402020	SCREW, 1/4-20X3/4 HHC SS	2
88	0402021	SCREW, 1/4-20X1 HHC SS	1
89	0402043	SCREW, 3/8-16X1-1/4 HHC SS	8
90	0402094	NUT, HEX 6-32 SS	6
91	0402111	LKWASHER, 1/4 SS	3

ITEM	PART NUMBER	DESCRIPTION	QTY
92	0402113	NUT, 1/4-20 LOK SS	2
93	0402114	NUT, 1/4-20 LOK REV SS	1
94	0402120	WASHER, 3/8 SS	8
95	0402123	NUT, 3/8-16 LOK SS	8
96	07005922	MOUNT-HYD GAUGE	1
97	0712230	BOSS, TURNTABLE LOCK	1
98	0806994	HOUSE LOCK INDICATOR WELD	1
99	0810433	HHU CHAIN ROLLER BRACKET, LH	1
100	0810434	HHU CHAIN ROLLER BRACKET, RH	1
101	09000097	ILLUMINATED LEGEND ASSY-LT UP	1
102	09000135	ILLUMINATED LEGEND ASSY-RT UP	1
103	09001440	50K DRAG WINCH ASSY	1
104	09002243	VALVE ASSY, 1150 KNEE MAIN	1
105	09002244	VALVE ASSY, 1150 KNEE BOOM U/L	1
106	09002246	VALVE ASSY, PRESSURE REDUC	1
107	09002247	CONTROL ASSY, 11 HANDLE WV	1
108	09002910	PUMP KIT, 4K KNEE BOOM	1
109	09002949	ILLUM LEGEND LT 1150 KNEE	1
110	09003710	SUBFRAME ASSY, 1135 KNEE	1
111	09003733	WRECKER FRAME ASSY 1135	1
112	09003870	WINCH ASSY 1135 W/ 35K WINCH	1
113	09004266	U/L BOOM ASSEMBLY (SHORT)	1
114	0908418	KIT-MUDFLAP CENTURY ROTATOR	1
115	0910188	2-STAGE FRONT OUTRIGGER ASY	1
116	0910246	3-STAGE REAR OUTRIGGER ASSY	1
117	0910615	OUTRIGGER CONT VALVE KIT	1
118	0910935	XBAR ASY HRDWR-XHD 5X5 CENT	1
119	0911237	ILLUM LEGEND ASSY RH LWR WLV	1
120	0911324	RH CTL STATION ASSY 5 WINCH W	1
121	0911957	KIT, D-RING PARTS	2
122	0912071	ASSY, 1135 BOOM	1
123	124004464	ALUM HEEL PLATE-14" SDU4&COA	1
124	24773017	HOSE ASSEMBLY 140"LG	2
125	24773018	HOSE ASSEMBLY 140"LG	2
126	9018016	HOSE CLAMP HS-20 1 1/4"	4
127	9024041	SWITCH-ROCKER, LIGHTED 12V	2
128	9041402	1/2 NC X 1 1/4 HHCS PLT GR8	6
129	9041403	1/2 NC X 1 1/2 HHCS PL GR8	1
130	9402970	TOOLBOX MTG. PAD	1
131	942480011	PLATE,SLOT-SS REAR WASHER	2
132	AWS-6821-A	HOSE ASSY-PRESSURE	8
133	FC41	FITTING-90DEG BLKHD ELB W/ NUT	8
134	HC1291	FITTING, 4MJ-4MB STR THR	1

09003709, BASIC UNIT ASSEMBLY, 1135 KNEE BOOM

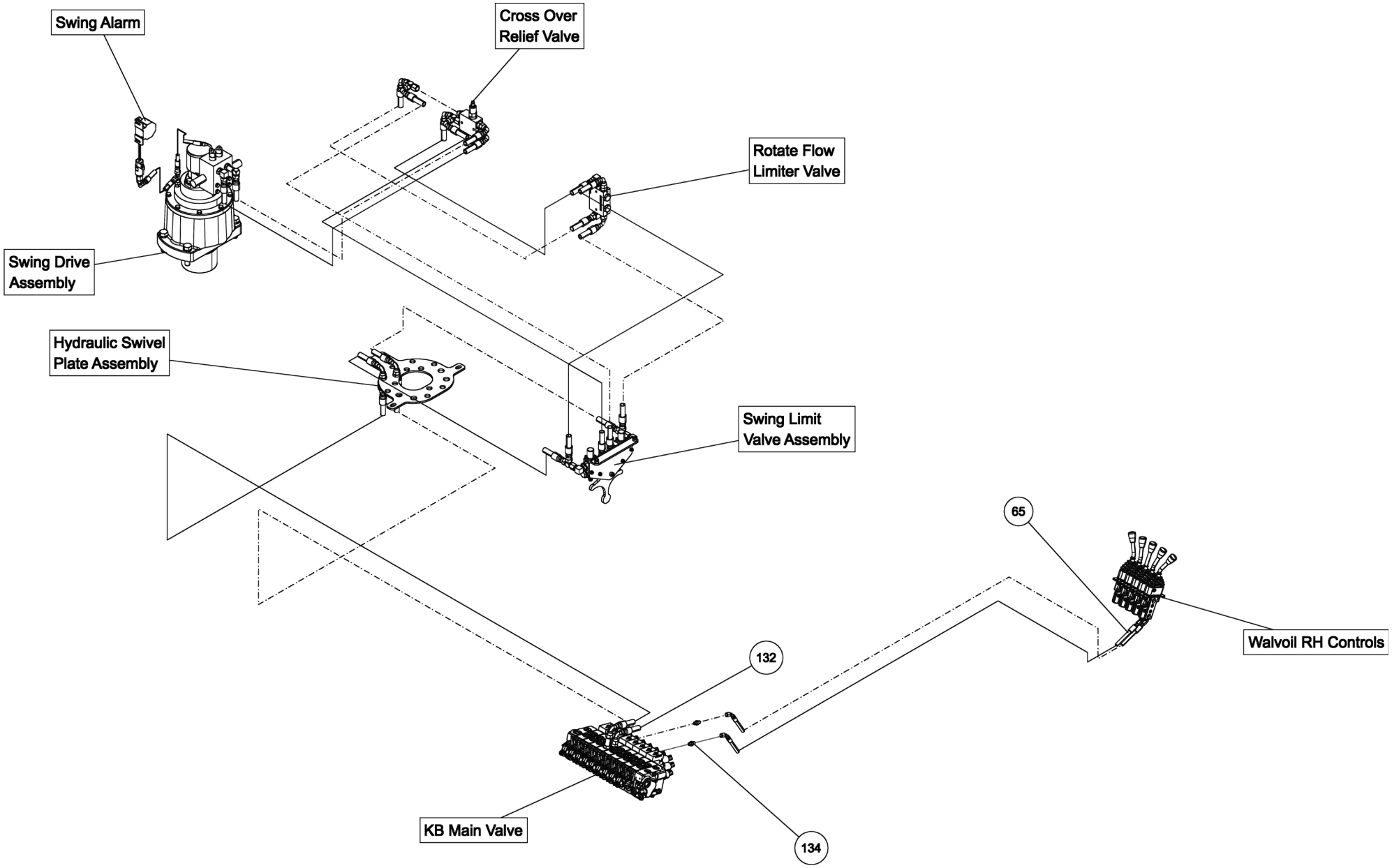

09003709, BASIC UNIT ASSEMBLY, 1135 KNEE BOOM

ITEM	PART NUMBER	DESCRIPTION	QTY
	09003709	BUA, 1135 KNEE BOOM	-
1	0300113	GREASE FITTING, 1/4-28 STR	1
2	03003419	HOSE, HYD 132" LG	1
3	03003420	HOSE, HYD 60" LG	1
4	03003421	HOSE, HYD 18"LG	4
5	03003424	HOSE, HYD 138"	1
6	03003425	HOSE, HYD 90" LG	4
7	03003426	HOSE, HYD 45" LG	6
8	0300364	CLAMP-HOSE,0.875"-2.75" 50"LBS	2
9	0300434	FITTING, HOSE BARB, 2	1
10	0300558	HOSE, SUCTION 2"ID 100R4 (C4)	1
11	0300835	KNOB-BOOM (UP-DOWN)	1
12	0300837	KNOB-BOOM (IN-OUT)	1
13	0300865	FITTING, CONNECTOR 8MJ-8MJ	1
14	0301113	HOSE HYD, 82"	2
15	0301377	FITTING, TEE,3/8" JIC	1
16	0301470	FITTING, 90ELB 6MJ-8MB90	3
17	0301473	HOSE HYD, 18" LG	1
18	0301522	ADAPTER, 6MJ-6MB	1
19	0301529	HOSE HYD, 58	2
20	03015922	STAUFF CLAMP, 3/8 TWIN	4
21	03016142	TUBE, HYD ASSY SF TO O/R	4
22	0301695	HOSE HYD, 91"	1
23	0301909	RECEPTACLE BOOT	1
24	0301946	FITTING, BLKHD CONNECT	3
25	0301947	FITTING, 45 DEG ADAPTER	1
26	0301948	HD 7 WAY TRAILER CONNECT	1
27	0301961	BALL VALVE 2	1
28	0302056	HOSE HYD, 183"	5
29	0302205	GAUGE, FLUSH MNTG-6000 PSI	2
30	0302367	PIPE NIPPLE - 2 X 4	1
31	0302372	HOSE HYD, 240" LG	4
32	0302534	FITTING, 45 DEG ELBOW	2
33	0302604	HOSE HYD, 44"	2
34	0302632	HOSE HYD, 40"	4
35	0302805	HOSE HYD, 10"	1
36	0302813	HOSE HYD, 108" LG	1
37	0302856	KNOB-TILT, 3/8-16 THREAD	1
38	0302881	HOSE HYD, 45"	1
39	0303170	HOSE, HYD. 75"	3
40	0303185	HOSE HYD, 66" LG.	4
41	0303188	HOSE HYD, 75" LG	1
42	0303339	HOSE HYD, 45" LG	1
43	0303340	HOSE HYD, 50" LG	1
44	0303379	KNOB, SWING CW - CCW	1
45	0303380	KNOB-UNDERLIFT (IN-OUT)	1

ITEM	PART NUMBER	DESCRIPTION	QTY
46	0303381	KNOB - UNDERLIFT (UP-DN)	1
47	0303391	HOSE 8AT2(8FJX-8FJ90) 110"	1
48	0303538	FITT, ADAPTER -BRASS 8FP-6MP	1
49	0303539	QUICK DISCONNECT 3/8 FPT	1
50	0304363	QUICK DISCONNECT 1/2 FPT	2
51	0306537	EMERGENCY SWITCH(RAMSEY)	2
52	0306540	ROTARY SELECT SWITCH OPER	1
53	0306921	PIPE PLUG, 2" SQ HD	1
54	0307052	WASHER, RUBBER 7/16X1 1/4X1/4	2
55	0307151	RUBBER FENDER	3
56	0307472	HOSE, HYD ASSY 24" LG	1
57	0307604	KNOB, RED LONG - SK0700-07	3
58	0310406	VALVE, SHUTTLE LS10-30-8T-N	1
59	0310456	PUSH BUTTN OPER W/MTG N/C	2
60	0310581	HOSE ASSY- 96" 8 fjx-10fjx90	4
61	0310956	TOOLBOX LH AL ROT TRI 2010 W/	1
62	0310957	TOOLBOX RH AL ROT TRI 2010 W/	1
63	0311191	ROLLER, POLY, 4" X 5/8"	2
64	0311417	HOSE, 196" 3/8 2 X STRAIGHT	2
65	0311426	HOSE ASSY, 80" 4FJX-4FJX45	1
66	0311500	LIGHT 6"OVAL REVERSE LED	2
67	0311502	LIGHT 6"OVAL CLEAR-AMBER LED	4
68	0311503	GROMMET, LIGHT 6" OVAL	1
69	0311514	LIGHT 2.5" CLEAR LENS-RED LED	2
70	0311516	GROMMET, LIGHT 2.5" ROUND	2
71	0312309	LIGHT 6" OVAL GLO-LT STT CLR/R	4
72	0313129	HOSE, 1 SUCTION 16C4	3
73	0400005	SCREW, 6-32X1/2 PRH SS	6
74	04000381	SS BHSCS 1/4-20 X 1	1
75	0400066	SCREW, 1/4-20X3/4 HHC GR5	2
76	0400078	SCREW, 1/4-20X2 HHC GR5	2
77	0400367	NUT, 1/4-20 LOK	2
78	0400379	NUT, 5/16-18 SPR J	1
79	0400451	WASHER, 1/4	2
80	0400452	LKWASHER, 1/4	2
81	0400454	WASHER, 1/4 SS	1
82	0400491	LKWASHER, 1/2	2
83	0400492	WASHER, 1/2	2
84	0400497	WASHER, 1/2 GR8	6
85	0400498	WASHER, 1/2X2X0.125	1
86	0400900	NUT, 1/2-13 LOK JAM	2
87	0402020	SCREW, 1/4-20X3/4 HHC SS	2
88	0402021	SCREW, 1/4-20X1 HHC SS	1
89	0402043	SCREW, 3/8-16X1-1/4 HHC SS	8
90	0402094	NUT, HEX 6-32 SS	6
91	0402111	LKWASHER, 1/4 SS	3

ITEM	PART NUMBER	DESCRIPTION	QTY
92	0402113	NUT, 1/4-20 LOK SS	2
93	0402114	NUT, 1/4-20 LOK REV SS	1
94	0402120	WASHER, 3/8 SS	8
95	0402123	NUT, 3/8-16 LOK SS	8
96	07005922	MOUNT-HYD GAUGE	1
97	0712230	BOSS, TURNTABLE LOCK	1
98	0806994	HOUSE LOCK INDICATOR WELD	1
99	0810433	HHU CHAIN ROLLER BRACKET, LH	1
100	0810434	HHU CHAIN ROLLER BRACKET, RH	1
101	09000097	ILLUMINATED LEGEND ASSY-LT UP	1
102	09000135	ILLUMINATED LEGEND ASSY-RT UP	1
103	09001440	50K DRAG WINCH ASSY	1
104	09002243	VALVE ASSY, 1150 KNEE MAIN	1
105	09002244	VALVE ASSY, 1150 KNEE BOOM U/L	1
106	09002246	VALVE ASSY, PRESSURE REDUC	1
107	09002247	CONTROL ASSY, 11 HANDLE WV	1
108	09002910	PUMP KIT, 4K KNEE BOOM	1
109	09002949	ILLUM LEGEND LT 1150 KNEE	1
110	09003710	SUBFRAME ASSY, 1135 KNEE	1
111	09003733	WRECKER FRAME ASSY 1135	1
112	09003870	WINCH ASSY 1135 W/ 35K WINCH	1
113	09004266	U/L BOOM ASSEMBLY (SHORT)	1
114	0908418	KIT-MUDFLAP CENTURY ROTATOR	1
115	0910188	2-STAGE FRONT OUTRIGGER ASY	1
116	0910246	3-STAGE REAR OUTRIGGER ASSY	1
117	0910615	OUTRIGGER CONT VALVE KIT	1
118	0910935	XBAR ASY HRDWR-XHD 5X5 CENT	1
119	0911237	ILLUM LEGEND ASSY RH LWR WLV	1
120	0911324	RH CTL STATION ASSY 5 WINCH W	1
121	0911957	KIT, D-RING PARTS	2
122	0912071	ASSY, 1135 BOOM	1
123	124004464	ALUM HEEL PLATE-14" SDU4&COA	1
124	24773017	HOSE ASSEMBLY 140"LG	2
125	24773018	HOSE ASSEMBLY 140"LG	2
126	9018016	HOSE CLAMP HS-20 1 1/4"	4
127	9024041	SWITCH-ROCKER, LIGHTED 12V	2
128	9041402	1/2 NC X 1 1/4 HHCS PLT GR8	6
129	9041403	1/2 NC X 1 1/2 HHCS PL GR8	1
130	9402970	TOOLBOX MTG. PAD	1
131	942480011	PLATE,SLOT-SS REAR WASHER	2
132	AWS-6821-A	HOSE ASSY-PRESSURE	8
133	FC41	FITTING-90DEG BLKHD ELB W/ NUT	8
134	HC1291	FITTING, 4MJ-4MB STR THR	1

09003709, BASIC UNIT ASSEMBLY, 1135 KNEE BOOM

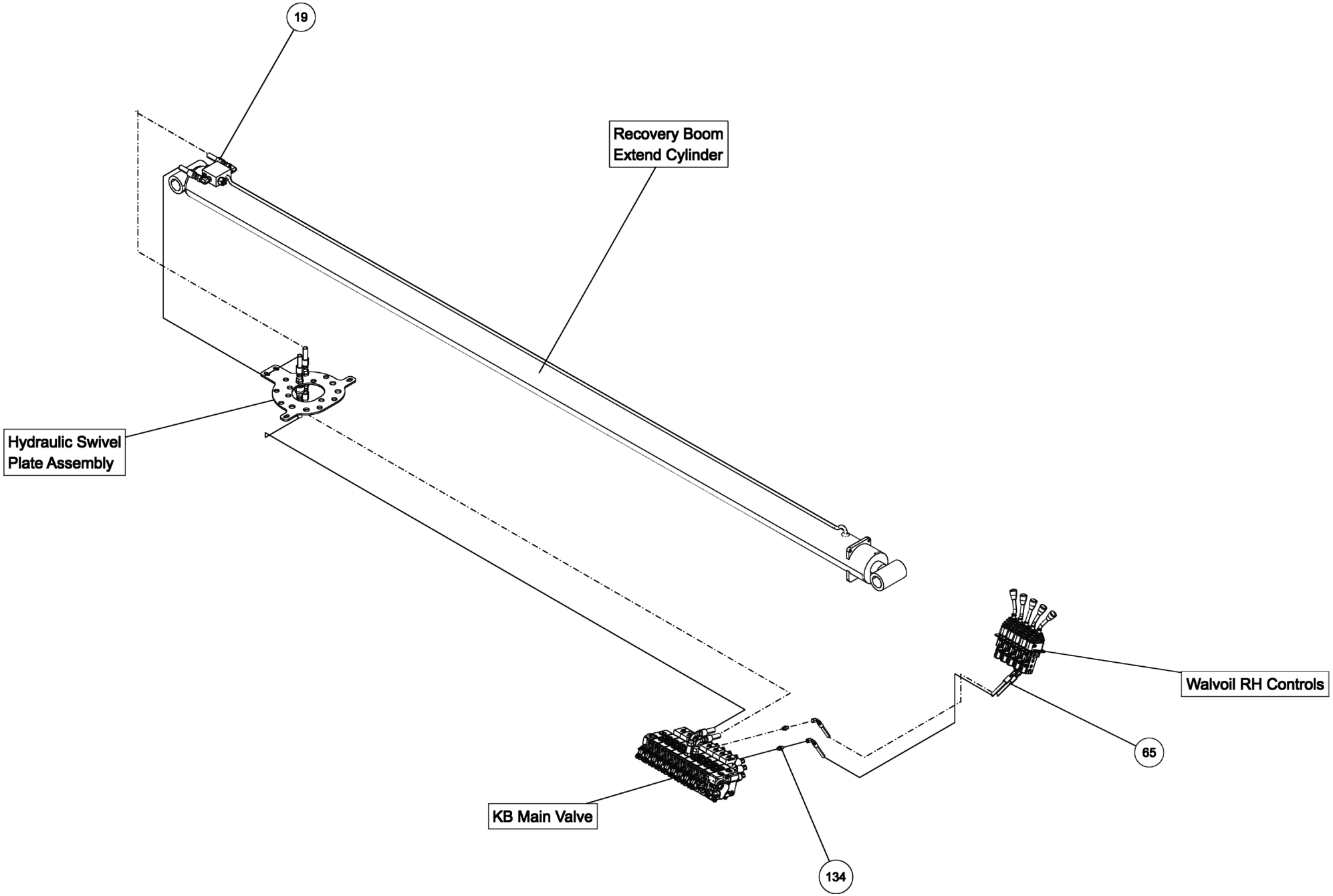

09003709, BASIC UNIT ASSEMBLY, 1135 KNEE BOOM

ITEM	PART NUMBER	DESCRIPTION	QTY
	09003709	BUA, 1135 KNEE BOOM	-
1	0300113	GREASE FITTING, 1/4-28 STR	1
2	03003419	HOSE, HYD 132" LG	1
3	03003420	HOSE, HYD 60" LG	1
4	03003421	HOSE, HYD 18"LG	4
5	03003424	HOSE, HYD 138"	1
6	03003425	HOSE, HYD 90" LG	4
7	03003426	HOSE, HYD 45" LG	6
8	0300364	CLAMP-HOSE,0.875"-2.75" 50"LBS	2
9	0300434	FITTING, HOSE BARB, 2	1
10	0300558	HOSE, SUCTION 2"ID 100R4 (C4)	1
11	0300835	KNOB-BOOM (UP-DOWN)	1
12	0300837	KNOB-BOOM (IN-OUT)	1
13	0300865	FITTING, CONNECTOR 8MJ-8MJ	1
14	0301113	HOSE HYD, 82"	2
15	0301377	FITTING, TEE,3/8" JIC	1
16	0301470	FITTING, 90ELB 6MJ-8MB90	3
17	0301473	HOSE HYD, 18" LG	1
18	0301522	ADAPTER, 6MJ-6MB	1
19	0301529	HOSE HYD, 58	2
20	03015922	STAUFF CLAMP, 3/8 TWIN	4
21	03016142	TUBE, HYD ASSY SF TO O/R	4
22	0301695	HOSE HYD, 91"	1
23	0301909	RECEPTACLE BOOT	1
24	0301946	FITTING, BLKHD CONNECT	3
25	0301947	FITTING, 45 DEG ADAPTER	1
26	0301948	HD 7 WAY TRAILER CONNECT	1
27	0301961	BALL VALVE 2	1
28	0302056	HOSE HYD, 183"	5
29	0302205	GAUGE, FLUSH MNTG-6000 PSI	2
30	0302367	PIPE NIPPLE - 2 X 4	1
31	0302372	HOSE HYD, 240" LG	4
32	0302534	FITTING, 45 DEG ELBOW	2
33	0302604	HOSE HYD, 44"	2
34	0302632	HOSE HYD, 40"	4
35	0302805	HOSE HYD, 10"	1
36	0302813	HOSE HYD, 108" LG	1
37	0302856	KNOB-TILT, 3/8-16 THREAD	1
38	0302881	HOSE HYD, 45"	1
39	0303170	HOSE, HYD. 75"	3
40	0303185	HOSE HYD, 66" LG.	4
41	0303188	HOSE HYD, 75" LG	1
42	0303339	HOSE HYD, 45" LG	1
43	0303340	HOSE HYD, 50" LG	1
44	0303379	KNOB, SWING CW - CCW	1
45	0303380	KNOB-UNDERLIFT (IN-OUT)	1
46	0303381	KNOB - UNDERLIFT (UP-DN)	1
47	0303391	HOSE 8AT2(8FJX-8FJ90) 110"	1
48	0303538	FITT, ADAPTER -BRASS 8FP-6MP	1
49	0303539	QUICK DISCONNECT 3/8 FPT	1
50	0304363	QUICK DISCONNECT 1/2 FPT	2
51	0306537	EMERGENCY SWITCH(RAMSEY)	2
52	0306540	ROTARY SELECT SWITCH OPER	1
53	0306921	PIPE PLUG, 2" SQ HD	1
54	0307052	WASHER, RUBBER 7/16X1 1/4X1/4	2
55	0307151	RUBBER FENDER	3
56	0307472	HOSE, HYD ASSY 24" LG	1
57	0307604	KNOB, RED LONG - SK0700-07	3
58	0310406	VALVE, SHUTTLE LS10-30-8T-N	1
59	0310456	PUSH BUTTN OPER W/MTG N/C	2
60	0310581	HOSE ASSY- 96" 8 fjx-10fjx90	4
61	0310956	TOOLBOX LH AL ROT TRI 2010 W/	1
62	0310957	TOOLBOX RH AL ROT TRI 2010 W/	1
63	0311191	ROLLER, POLY, 4" X 5/8"	2
64	0311417	HOSE, 196" 3/8 2 X STRAIGHT	2
65	0311426	HOSE ASSY, 80" 4FJX-4FJX45	1
66	0311500	LIGHT 6"OVAL REVERSE LED	2
67	0311502	LIGHT 6"OVAL CLEAR-AMBER LED	4
68	0311503	GROMMET, LIGHT 6" OVAL	1
69	0311514	LIGHT 2.5" CLEAR LENS-RED LED	2
70	0311516	GROMMET, LIGHT 2.5" ROUND	2
71	0312309	LIGHT 6" OVAL GLO-LT STT CLR/R	4
72	0313129	HOSE, 1 SUCTION 16C4	3
73	0400005	SCREW, 6-32X1/2 PRH SS	6
74	04000381	SS BHSCS 1/4-20 X 1	1
75	0400066	SCREW, 1/4-20X3/4 HHC GR5	2
76	0400078	SCREW, 1/4-20X2 HHC GR5	2
77	0400367	NUT, 1/4-20 LOK	2
78	0400379	NUT, 5/16-18 SPR J	1
79	0400451	WASHER, 1/4	2
80	0400452	LKWASHER, 1/4	2
81	0400454	WASHER, 1/4 SS	1
82	0400491	LKWASHER, 1/2	2
83	0400492	WASHER, 1/2	2
84	0400497	WASHER, 1/2 GR8	6
85	0400498	WASHER, 1/2X2X0.125	1
86	0400900	NUT, 1/2-13 LOK JAM	2
87	0402020	SCREW, 1/4-20X3/4 HHC SS	2
88	0402021	SCREW, 1/4-20X1 HHC SS	1
89	0402043	SCREW, 3/8-16X1-1/4 HHC SS	8
90	0402094	NUT, HEX 6-32 SS	6
91	0402111	LKWASHER, 1/4 SS	3
92	0402113	NUT, 1/4-20 LOK SS	2
93	0402114	NUT, 1/4-20 LOK REV SS	1
94	0402120	WASHER, 3/8 SS	8
95	0402123	NUT, 3/8-16 LOK SS	8
96	07005922	MOUNT-HYD GAUGE	1
97	0712230	BOSS, TURNTABLE LOCK	1
98	0806994	HOUSE LOCK INDICATOR WELD	1
99	0810433	HHU CHAIN ROLLER BRACKET, LH	1
100	0810434	HHU CHAIN ROLLER BRACKET, RH	1
101	09000097	ILLUMINATED LEGEND ASSY-LT UP	1
102	09000135	ILLUMINATED LEGEND ASSY-RT UP	1
103	09001440	50K DRAG WINCH ASSY	1
104	09002243	VALVE ASSY, 1150 KNEE MAIN	1
105	09002244	VALVE ASSY, 1150 KNEE BOOM U/L	1
106	09002246	VALVE ASSY, PRESSURE REDUC	1
107	09002247	CONTROL ASSY, 11 HANDLE WV	1
108	09002910	PUMP KIT, 4K KNEE BOOM	1
109	09002949	ILLUM LEGEND LT 1150 KNEE	1
110	09003710	SUBFRAME ASSY, 1135 KNEE	1
111	09003733	WRECKER FRAME ASSY 1135	1
112	09003870	WINCH ASSY 1135 W/ 35K WINCH	1
113	09004266	U/L BOOM ASSEMBLY (SHORT)	1
114	0908418	KIT-MUDFLAP CENTURY ROTATOR	1
115	0910188	2-STAGE FRONT OUTRIGGER ASY	1
116	0910246	3-STAGE REAR OUTRIGGER ASSY	1
117	0910615	OUTRIGGER CONT VALVE KIT	1
118	0910935	XBAR ASY HRDWR-XHD 5X5 CENT	1
119	0911237	ILLUM LEGEND ASSY RH LWR WLV	1
120	0911324	RH CTL STATION ASSY 5 WINCH W	1
121	0911957	KIT, D-RING PARTS	2
122	0912071	ASSY, 1135 BOOM	1
123	124004464	ALUM HEEL PLATE-14" SDU4&COA	1
124	24773017	HOSE ASSEMBLY 140"LG	2
125	24773018	HOSE ASSEMBLY 140"LG	2
126	9018016	HOSE CLAMP HS-20 1 1/4"	4
127	9024041	SWITCH-ROCKER, LIGHTED 12V	2
128	9041402	1/2 NC X 1 1/4 HHCS PLT GR8	6
129	9041403	1/2 NC X 1 1/2 HHCS PL GR8	1
130	9402970	TOOLBOX MTG. PAD	1
131	942480011	PLATE,SLOT-SS REAR WASHER	2
132	AWS-6821-A	HOSE ASSY-PRESSURE	8
133	FC41	FITTING-90DEG BLKHD ELB W/ NUT	8
134	HC1291	FITTING, 4MJ-4MB STR THR	1

09003709, BASIC UNIT ASSEMBLY, 1135 KNEE BOOM

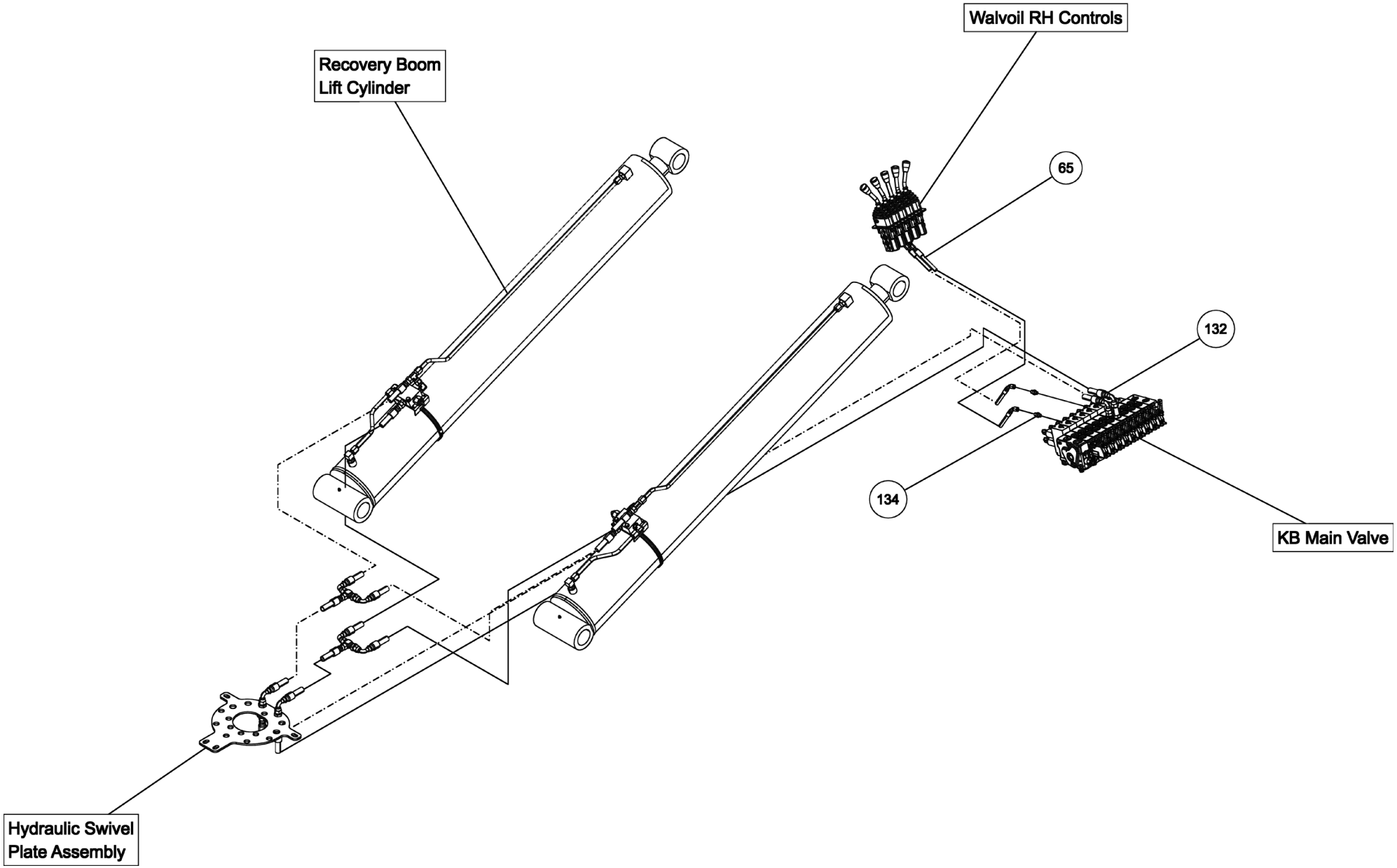

09003709, BASIC UNIT ASSEMBLY, 1135 KNEE BOOM

ITEM	PART NUMBER	DESCRIPTION	QTY
	09003709	BUA, 1135 KNEE BOOM	-
1	0300113	GREASE FITTING, 1/4-28 STR	1
2	03003419	HOSE, HYD 132" LG	1
3	03003420	HOSE, HYD 60" LG	1
4	03003421	HOSE, HYD 18"LG	4
5	03003424	HOSE, HYD 138"	1
6	03003425	HOSE, HYD 90" LG	4
7	03003426	HOSE, HYD 45" LG	6
8	0300364	CLAMP-HOSE,0.875"-2.75" 50"LBS	2
9	0300434	FITTING, HOSE BARB, 2	1
10	0300558	HOSE, SUCTION 2"ID 100R4 (C4)	1
11	0300835	KNOB-BOOM (UP-DOWN)	1
12	0300837	KNOB-BOOM (IN-OUT)	1
13	0300865	FITTING, CONNECTOR 8MJ-8MJ	1
14	0301113	HOSE HYD, 82"	2
15	0301377	FITTING, TEE,3/8" JIC	1
16	0301470	FITTING, 90ELB 6MJ-8MB90	3
17	0301473	HOSE HYD, 18" LG	1
18	0301522	ADAPTER, 6MJ-6MB	1
19	0301529	HOSE HYD, 58	2
20	03015922	STAUFF CLAMP, 3/8 TWIN	4
21	03016142	TUBE, HYD ASSY SF TO O/R	4
22	0301695	HOSE HYD, 91"	1
23	0301909	RECEPTACLE BOOT	1
24	0301946	FITTING, BLKHD CONNECT	3
25	0301947	FITTING, 45 DEG ADAPTER	1
26	0301948	HD 7 WAY TRAILER CONNECT	1
27	0301961	BALL VALVE 2	1
28	0302056	HOSE HYD, 183"	5
29	0302205	GAUGE, FLUSH MNTG-6000 PSI	2
30	0302367	PIPE NIPPLE - 2 X 4	1
31	0302372	HOSE HYD, 240" LG	4
32	0302534	FITTING, 45 DEG ELBOW	2
33	0302604	HOSE HYD, 44"	2
34	0302632	HOSE HYD, 40"	4
35	0302805	HOSE HYD, 10"	1
36	0302813	HOSE HYD, 108" LG	1
37	0302856	KNOB-TILT, 3/8-16 THREAD	1
38	0302881	HOSE HYD, 45"	1
39	0303170	HOSE, HYD. 75"	3
40	0303185	HOSE HYD, 66" LG.	4
41	0303188	HOSE HYD, 75" LG	1
42	0303339	HOSE HYD, 45" LG	1
43	0303340	HOSE HYD, 50" LG	1
44	0303379	KNOB, SWING CW - CCW	1
45	0303380	KNOB-UNDERLIFT (IN-OUT)	1

ITEM	PART NUMBER	DESCRIPTION	QTY
46	0303381	KNOB - UNDERLIFT (UP-DN)	1
47	0303391	HOSE 8AT2(8FJX-8FJ90) 110"	1
48	0303538	FITT, ADAPTER -BRASS 8FP-6MP	1
49	0303539	QUICK DISCONNECT 3/8 FPT	1
50	0304363	QUICK DISCONNECT 1/2 FPT	2
51	0306537	EMERGENCY SWITCH(RAMSEY)	2
52	0306540	ROTARY SELECT SWITCH OPER	1
53	0306921	PIPE PLUG, 2" SQ HD	1
54	0307052	WASHER, RUBBER 7/16X1 1/4X1/4	2
55	0307151	RUBBER FENDER	3
56	0307472	HOSE, HYD ASSY 24" LG	1
57	0307604	KNOB, RED LONG - SK0700-07	3
58	0310406	VALVE, SHUTTLE LS10-30-8T-N	1
59	0310456	PUSH BUTTN OPER W/MTG N/C	2
60	0310581	HOSE ASSY- 96" 8 fjx-10fjx90	4
61	0310956	TOOLBOX LH AL ROT TRI 2010 W/	1
62	0310957	TOOLBOX RH AL ROT TRI 2010 W/	1
63	0311191	ROLLER, POLY, 4" X 5/8"	2
64	0311417	HOSE, 196" 3/8 2 X STRAIGHT	2
65	0311426	HOSE ASSY, 80" 4FJX-4FJX45	1
66	0311500	LIGHT 6"OVAL REVERSE LED	2
67	0311502	LIGHT 6"OVAL CLEAR-AMBER LED	4
68	0311503	GROMMET, LIGHT 6" OVAL	1
69	0311514	LIGHT 2.5" CLEAR LENS-RED LED	2
70	0311516	GROMMET, LIGHT 2.5" ROUND	2
71	0312309	LIGHT 6" OVAL GLO-LT STT CLR/R	4
72	0313129	HOSE, 1 SUCTION 16C4	3
73	0400005	SCREW, 6-32X1/2 PRH SS	6
74	04000381	SS BHSCS 1/4-20 X 1	1
75	0400066	SCREW, 1/4-20X3/4 HHC GR5	2
76	0400078	SCREW, 1/4-20X2 HHC GR5	2
77	0400367	NUT, 1/4-20 LOK	2
78	0400379	NUT, 5/16-18 SPR J	1
79	0400451	WASHER, 1/4	2
80	0400452	LKWASHER, 1/4	2
81	0400454	WASHER, 1/4 SS	1
82	0400491	LKWASHER, 1/2	2
83	0400492	WASHER, 1/2	2
84	0400497	WASHER, 1/2 GR8	6
85	0400498	WASHER, 1/2X2X0.125	1
86	0400900	NUT, 1/2-13 LOK JAM	2
87	0402020	SCREW, 1/4-20X3/4 HHC SS	2
88	0402021	SCREW, 1/4-20X1 HHC SS	1
89	0402043	SCREW, 3/8-16X1-1/4 HHC SS	8
90	0402094	NUT, HEX 6-32 SS	6
91	0402111	LKWASHER, 1/4 SS	3

ITEM	PART NUMBER	DESCRIPTION	QTY
92	0402113	NUT, 1/4-20 LOK SS	2
93	0402114	NUT, 1/4-20 LOK REV SS	1
94	0402120	WASHER, 3/8 SS	8
95	0402123	NUT, 3/8-16 LOK SS	8
96	07005922	MOUNT-HYD GAUGE	1
97	0712230	BOSS, TURNTABLE LOCK	1
98	0806994	HOUSE LOCK INDICATOR WELD	1
99	0810433	HHU CHAIN ROLLER BRACKET, LH	1
100	0810434	HHU CHAIN ROLLER BRACKET, RH	1
101	09000097	ILLUMINATED LEGEND ASSY-LT UP	1
102	09000135	ILLUMINATED LEGEND ASSY-RT UP	1
103	09001440	50K DRAG WINCH ASSY	1
104	09002243	VALVE ASSY, 1150 KNEE MAIN	1
105	09002244	VALVE ASSY, 1150 KNEE BOOM U/L	1
106	09002246	VALVE ASSY, PRESSURE REDUC	1
107	09002247	CONTROL ASSY, 11 HANDLE WV	1
108	09002910	PUMP KIT, 4K KNEE BOOM	1
109	09002949	ILLUM LEGEND LT 1150 KNEE	1
110	09003710	SUBFRAME ASSY, 1135 KNEE	1
111	09003733	WRECKER FRAME ASSY 1135	1
112	09003870	WINCH ASSY 1135 W/ 35K WINCH	1
113	09004266	U/L BOOM ASSEMBLY (SHORT)	1
114	0908418	KIT-MUDFLAP CENTURY ROTATOR	1
115	0910188	2-STAGE FRONT OUTRIGGER ASY	1
116	0910246	3-STAGE REAR OUTRIGGER ASSY	1
117	0910615	OUTRIGGER CONT VALVE KIT	1
118	0910935	XBAR ASY HRDWR-XHD 5X5 CENT	1
119	0911237	ILLUM LEGEND ASSY RH LWR WLV	1
120	0911324	RH CTL STATION ASSY 5 WINCH W	1
121	0911957	KIT, D-RING PARTS	2
122	0912071	ASSY, 1135 BOOM	1
123	124004464	ALUM HEEL PLATE-14" SDU4&COA	1
124	24773017	HOSE ASSEMBLY 140"LG	2
125	24773018	HOSE ASSEMBLY 140"LG	2
126	9018016	HOSE CLAMP HS-20 1 1/4"	4
127	9024041	SWITCH-ROCKER, LIGHTED 12V	2
128	9041402	1/2 NC X 1 1/4 HHCS PLT GR8	6
129	9041403	1/2 NC X 1 1/2 HHCS PL GR8	1
130	9402970	TOOLBOX MTG. PAD	1
131	942480011	PLATE,SLOT-SS REAR WASHER	2
132	AWS-6821-A	HOSE ASSY-PRESSURE	8
133	FC41	FITTING-90DEG BLKHD ELB W/ NUT	8
134	HC1291	FITTING, 4MJ-4MB STR THR	1

09003709, BASIC UNIT ASSEMBLY, 1135 KNEE BOOM

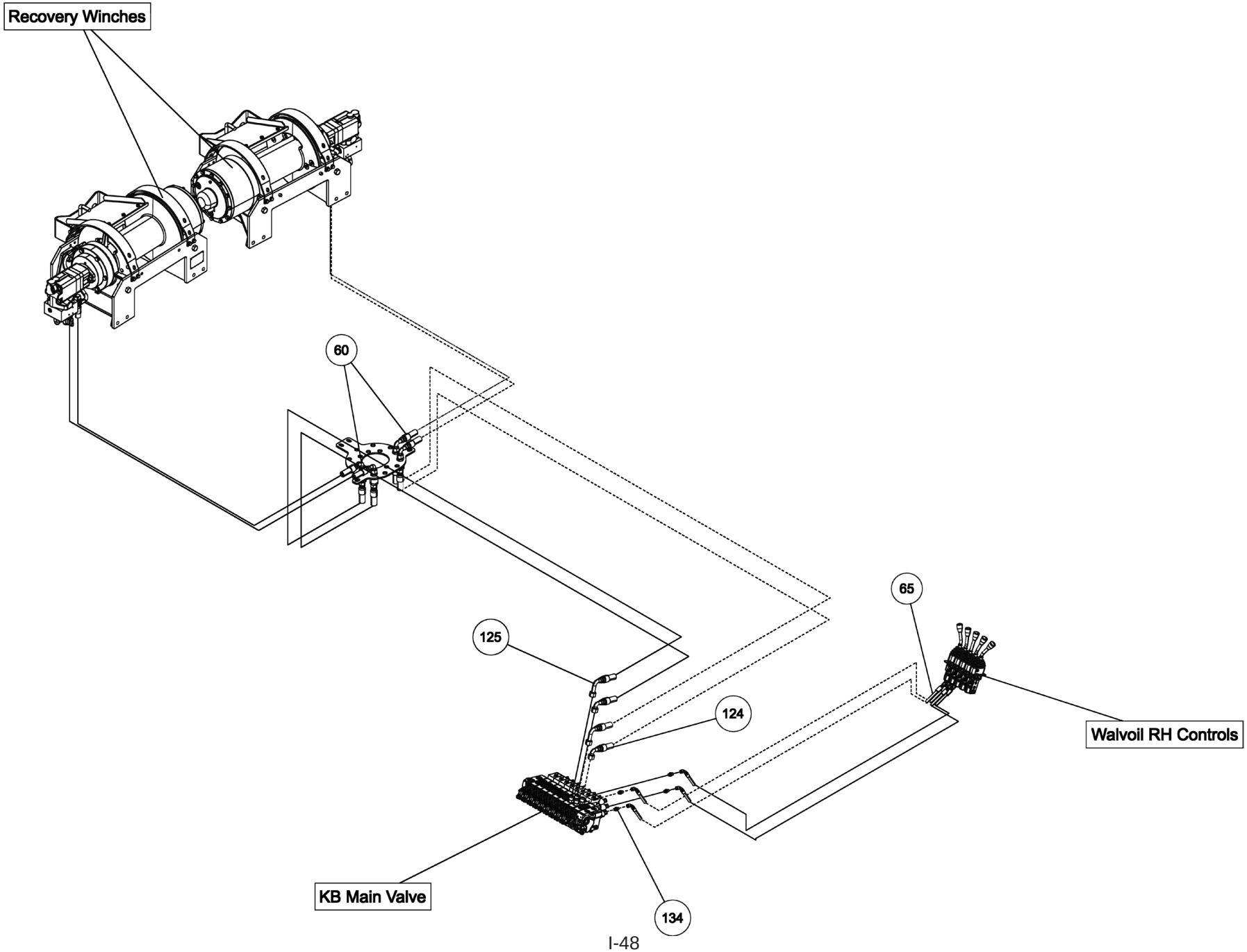

09003709, BASIC UNIT ASSEMBLY, 1135 KNEE BOOM

ITEM	PART NUMBER	DESCRIPTION	QTY
	09003709	BUA, 1135 KNEE BOOM	-
1	0300113	GREASE FITTING, 1/4-28 STR	1
2	03003419	HOSE, HYD 132" LG	1
3	03003420	HOSE, HYD 60" LG	1
4	03003421	HOSE, HYD 18"LG	4
5	03003424	HOSE, HYD 138"	1
6	03003425	HOSE, HYD 90" LG	4
7	03003426	HOSE, HYD 45" LG	6
8	0300364	CLAMP-HOSE,0.875"-2.75" 50"LBS	2
9	0300434	FITTING, HOSE BARB, 2	1
10	0300558	HOSE, SUCTION 2"ID 100R4 (C4)	1
11	0300835	KNOB-BOOM (UP-DOWN)	1
12	0300837	KNOB-BOOM (IN-OUT)	1
13	0300865	FITTING, CONNECTOR 8MJ-8MJ	1
14	0301113	HOSE HYD, 82"	2
15	0301377	FITTING, TEE,3/8" JIC	1
16	0301470	FITTING, 90ELB 6MJ-8MB90	3
17	0301473	HOSE HYD, 18" LG	1
18	0301522	ADAPTER, 6MJ-6MB	1
19	0301529	HOSE HYD, 58	2
20	03015922	STAUFF CLAMP, 3/8 TWIN	4
21	03016142	TUBE, HYD ASSY SF TO O/R	4
22	0301695	HOSE HYD, 91"	1
23	0301909	RECEPTACLE BOOT	1
24	0301946	FITTING, BLKHD CONNECT	3
25	0301947	FITTING, 45 DEG ADAPTER	1
26	0301948	HD 7 WAY TRAILER CONNECT	1
27	0301961	BALL VALVE 2	1
28	0302056	HOSE HYD, 183"	5
29	0302205	GAUGE, FLUSH MNTG-6000 PSI	2
30	0302367	PIPE NIPPLE - 2 X 4	1
31	0302372	HOSE HYD, 240" LG	4
32	0302534	FITTING, 45 DEG ELBOW	2
33	0302604	HOSE HYD, 44"	2
34	0302632	HOSE HYD, 40"	4
35	0302805	HOSE HYD, 10"	1
36	0302813	HOSE HYD, 108" LG	1
37	0302856	KNOB-TILT, 3/8-16 THREAD	1
38	0302881	HOSE HYD, 45"	1
39	0303170	HOSE, HYD. 75"	3
40	0303185	HOSE HYD, 66" LG.	4
41	0303188	HOSE HYD, 75" LG	1
42	0303339	HOSE HYD, 45" LG	1
43	0303340	HOSE HYD, 50" LG	1
44	0303379	KNOB, SWING CW - CCW	1
45	0303380	KNOB-UNDERLIFT (IN-OUT)	1
46	0303381	KNOB - UNDERLIFT (UP-DN)	1
47	0303391	HOSE 8AT2(8FJX-8FJ90) 110"	1
48	0303538	FITT, ADAPTER -BRASS 8FP-6MP	1
49	0303539	QUICK DISCONNECT 3/8 FPT	1
50	0304363	QUICK DISCONNECT 1/2 FPT	2
51	0306537	EMERGENCY SWITCH(RAMSEY)	2
52	0306540	ROTARY SELECT SWITCH OPER	1
53	0306921	PIPE PLUG, 2" SQ HD	1
54	0307052	WASHER, RUBBER 7/16X1 1/4X1/4	2
55	0307151	RUBBER FENDER	3
56	0307472	HOSE, HYD ASSY 24" LG	1
57	0307604	KNOB, RED LONG - SK0700-07	3
58	0310406	VALVE, SHUTTLE LS10-30-8T-N	1
59	0310456	PUSH BUTTN OPER W/MTG N/C	2
60	0310581	HOSE ASSY- 96" 8 fjx-10fjx90	4
61	0310956	TOOLBOX LH AL ROT TRI 2010 W/	1
62	0310957	TOOLBOX RH AL ROT TRI 2010 W/	1
63	0311191	ROLLER, POLY, 4" X 5/8"	2
64	0311417	HOSE, 196" 3/8 2 X STRAIGHT	2
65	0311426	HOSE ASSY, 80" 4FJX-4FJX45	1
66	0311500	LIGHT 6"OVAL REVERSE LED	2
67	0311502	LIGHT 6"OVAL CLEAR-AMBER LED	4
68	0311503	GROMMET, LIGHT 6" OVAL	1
69	0311514	LIGHT 2.5" CLEAR LENS-RED LED	2
70	0311516	GROMMET, LIGHT 2.5" ROUND	2
71	0312309	LIGHT 6" OVAL GLO-LT STT CLR/R	4
72	0313129	HOSE, 1 SUCTION 16C4	3
73	0400005	SCREW, 6-32X1/2 PRH SS	6
74	04000381	SS BHSCS 1/4-20 X 1	1
75	0400066	SCREW, 1/4-20X3/4 HHC GR5	2
76	0400078	SCREW, 1/4-20X2 HHC GR5	2
77	0400367	NUT, 1/4-20 LOK	2
78	0400379	NUT, 5/16-18 SPR J	1
79	0400451	WASHER, 1/4	2
80	0400452	LKWASHER, 1/4	2
81	0400454	WASHER, 1/4 SS	1
82	0400491	LKWASHER, 1/2	2
83	0400492	WASHER, 1/2	2
84	0400497	WASHER, 1/2 GR8	6
85	0400498	WASHER, 1/2X2X0.125	1
86	0400900	NUT, 1/2-13 LOK JAM	2
87	0402020	SCREW, 1/4-20X3/4 HHC SS	2
88	0402021	SCREW, 1/4-20X1 HHC SS	1
89	0402043	SCREW, 3/8-16X1-1/4 HHC SS	8
90	0402094	NUT, HEX 6-32 SS	6
91	0402111	LKWASHER, 1/4 SS	3
92	0402113	NUT, 1/4-20 LOK SS	2
93	0402114	NUT, 1/4-20 LOK REV SS	1
94	0402120	WASHER, 3/8 SS	8
95	0402123	NUT, 3/8-16 LOK SS	8
96	07005922	MOUNT-HYD GAUGE	1
97	0712230	BOSS, TURNTABLE LOCK	1
98	0806994	HOUSE LOCK INDICATOR WELD	1
99	0810433	HHU CHAIN ROLLER BRACKET, LH	1
100	0810434	HHU CHAIN ROLLER BRACKET, RH	1
101	09000097	ILLUMINATED LEGEND ASSY-LT UP	1
102	09000135	ILLUMINATED LEGEND ASSY-RT UP	1
103	09001440	50K DRAG WINCH ASSY	1
104	09002243	VALVE ASSY, 1150 KNEE MAIN	1
105	09002244	VALVE ASSY, 1150 KNEE BOOM U/L	1
106	09002246	VALVE ASSY, PRESSURE REDUC	1
107	09002247	CONTROL ASSY, 11 HANDLE WV	1
108	09002910	PUMP KIT, 4K KNEE BOOM	1
109	09002949	ILLUM LEGEND LT 1150 KNEE	1
110	09003710	SUBFRAME ASSY, 1135 KNEE	1
111	09003733	WRECKER FRAME ASSY 1135	1
112	09003870	WINCH ASSY 1135 W/ 35K WINCH	1
113	09004266	U/L BOOM ASSEMBLY (SHORT)	1
114	0908418	KIT-MUDFLAP CENTURY ROTATOR	1
115	0910188	2-STAGE FRONT OUTRIGGER ASY	1
116	0910246	3-STAGE REAR OUTRIGGER ASSY	1
117	0910615	OUTRIGGER CONT VALVE KIT	1
118	0910935	XBAR ASY HRDWR-XHD 5X5 CENT	1
119	0911237	ILLUM LEGEND ASSY RH LWR WLV	1
120	0911324	RH CTL STATION ASSY 5 WINCH W	1
121	0911957	KIT, D-RING PARTS	2
122	0912071	ASSY, 1135 BOOM	1
123	124004464	ALUM HEEL PLATE-14" SDU4&COA	1
124	24773017	HOSE ASSEMBLY 140"LG	2
125	24773018	HOSE ASSEMBLY 140"LG	2
126	9018016	HOSE CLAMP HS-20 1 1/4"	4
127	9024041	SWITCH-ROCKER, LIGHTED 12V	2
128	9041402	1/2 NC X 1 1/4 HHCS PLT GR8	6
129	9041403	1/2 NC X 1 1/2 HHCS PL GR8	1
130	9402970	TOOLBOX MTG. PAD	1
131	942480011	PLATE,SLOT-SS REAR WASHER	2
132	AWS-6821-A	HOSE ASSY-PRESSURE	8
133	FC41	FITTING-90DEG BLKHD ELB W/ NUT	8
134	HC1291	FITTING, 4MJ-4MB STR THR	1

09003709, BASIC UNIT ASSEMBLY, 1135 KNEE BOOM

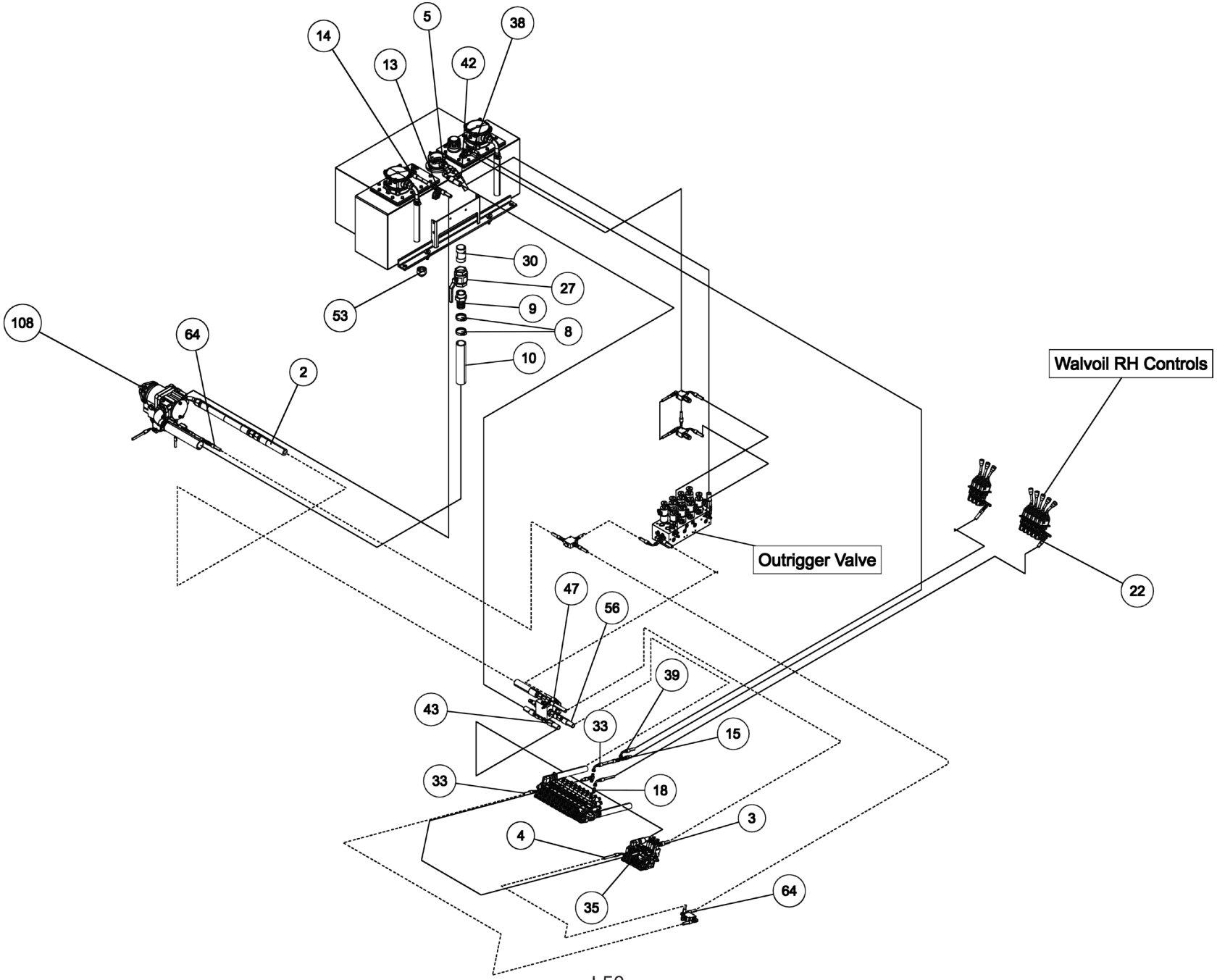

09003709, BASIC UNIT ASSEMBLY, 1135 KNEE BOOM

ITEM	PART NUMBER	DESCRIPTION	QTY
	09003709	BUA, 1135 KNEE BOOM	-
1	0300113	GREASE FITTING, 1/4-28 STR	1
2	03003419	HOSE, HYD 132" LG	1
3	03003420	HOSE, HYD 60" LG	1
4	03003421	HOSE, HYD 18"LG	4
5	03003424	HOSE, HYD 138"	1
6	03003425	HOSE, HYD 90" LG	4
7	03003426	HOSE, HYD 45" LG	6
8	0300364	CLAMP-HOSE,0.875"-2.75" 50"LBS	2
9	0300434	FITTING, HOSE BARB, 2	1
10	0300558	HOSE, SUCTION 2"ID 100R4 (C4)	1
11	0300835	KNOB-BOOM (UP-DOWN)	1
12	0300837	KNOB-BOOM (IN-OUT)	1
13	0300865	FITTING, CONNECTOR 8MJ-8MJ	1
14	0301113	HOSE HYD, 82"	2
15	0301377	FITTING, TEE,3/8" JIC	1
16	0301470	FITTING, 90ELB 6MJ-8MB90	3
17	0301473	HOSE HYD, 18" LG	1
18	0301522	ADAPTER, 6MJ-6MB	1
19	0301529	HOSE HYD, 58	2
20	03015922	STAUFF CLAMP, 3/8 TWIN	4
21	03016142	TUBE, HYD ASSY SF TO O/R	4
22	0301695	HOSE HYD, 91"	1
23	0301909	RECEPTACLE BOOT	1
24	0301946	FITTING, BLKHD CONNECT	3
25	0301947	FITTING, 45 DEG ADAPTER	1
26	0301948	HD 7 WAY TRAILER CONNECT	1
27	0301961	BALL VALVE 2	1
28	0302056	HOSE HYD, 183"	5
29	0302205	GAUGE, FLUSH MNTG-6000 PSI	2
30	0302367	PIPE NIPPLE - 2 X 4	1
31	0302372	HOSE HYD, 240" LG	4
32	0302534	FITTING, 45 DEG ELBOW	2
33	0302604	HOSE HYD, 44"	2
34	0302632	HOSE HYD, 40"	4
35	0302805	HOSE HYD, 10"	1
36	0302813	HOSE HYD, 108" LG	1
37	0302856	KNOB-TILT, 3/8-16 THREAD	1
38	0302881	HOSE HYD, 45"	1
39	0303170	HOSE, HYD. 75"	3
40	0303185	HOSE HYD, 66" LG.	4
41	0303188	HOSE HYD, 75" LG	1
42	0303339	HOSE HYD, 45" LG	1
43	0303340	HOSE HYD, 50" LG	1
44	0303379	KNOB, SWING CW - CCW	1
45	0303380	KNOB-UNDERLIFT (IN-OUT)	1

ITEM	PART NUMBER	DESCRIPTION	QTY
46	0303381	KNOB - UNDERLIFT (UP-DN)	1
47	0303391	HOSE 8AT2(8FJX-8FJ90) 110"	1
48	0303538	FITT, ADAPTER -BRASS 8FP-6MP	1
49	0303539	QUICK DISCONNECT 3/8 FPT	1
50	0304363	QUICK DISCONNECT 1/2 FPT	2
51	0306537	EMERGENCY SWITCH(RAMSEY)	2
52	0306540	ROTARY SELECT SWITCH OPER	1
53	0306921	PIPE PLUG, 2" SQ HD	1
54	0307052	WASHER, RUBBER 7/16X1 1/4X1/4	2
55	0307151	RUBBER FENDER	3
56	0307472	HOSE, HYD ASSY 24" LG	1
57	0307604	KNOB, RED LONG - SK0700-07	3
58	0310406	VALVE, SHUTTLE LS10-30-8T-N	1
59	0310456	PUSH BUTTN OPER W/MTG N/C	2
60	0310581	HOSE ASSY- 96" 8 fjx-10fjx90	4
61	0310956	TOOLBOX LH AL ROT TRI 2010 W/	1
62	0310957	TOOLBOX RH AL ROT TRI 2010 W/	1
63	0311191	ROLLER, POLY, 4" X 5/8"	2
64	0311417	HOSE, 196" 3/8 2 X STRAIGHT	2
65	0311426	HOSE ASSY, 80" 4FJX-4FJX45	1
66	0311500	LIGHT 6"OVAL REVERSE LED	2
67	0311502	LIGHT 6"OVAL CLEAR-AMBER LED	4
68	0311503	GROMMET, LIGHT 6" OVAL	1
69	0311514	LIGHT 2.5" CLEAR LENS-RED LED	2
70	0311516	GROMMET, LIGHT 2.5" ROUND	2
71	0312309	LIGHT 6" OVAL GLO-LT STT CLR/R	4
72	0313129	HOSE, 1 SUCTION 16C4	3
73	0400005	SCREW, 6-32X1/2 PRH SS	6
74	04000381	SS BHSCS 1/4-20 X 1	1
75	0400066	SCREW, 1/4-20X3/4 HHC GR5	2
76	0400078	SCREW, 1/4-20X2 HHC GR5	2
77	0400367	NUT, 1/4-20 LOK	2
78	0400379	NUT, 5/16-18 SPR J	1
79	0400451	WASHER, 1/4	2
80	0400452	LKWASHER, 1/4	2
81	0400454	WASHER, 1/4 SS	1
82	0400491	LKWASHER, 1/2	2
83	0400492	WASHER, 1/2	2
84	0400497	WASHER, 1/2 GR8	6
85	0400498	WASHER, 1/2X2X0.125	1
86	0400900	NUT, 1/2-13 LOK JAM	2
87	0402020	SCREW, 1/4-20X3/4 HHC SS	2
88	0402021	SCREW, 1/4-20X1 HHC SS	1
89	0402043	SCREW, 3/8-16X1-1/4 HHC SS	8
90	0402094	NUT, HEX 6-32 SS	6
91	0402111	LKWASHER, 1/4 SS	3

ITEM	PART NUMBER	DESCRIPTION	QTY
92	0402113	NUT, 1/4-20 LOK SS	2
93	0402114	NUT, 1/4-20 LOK REV SS	1
94	0402120	WASHER, 3/8 SS	8
95	0402123	NUT, 3/8-16 LOK SS	8
96	07005922	MOUNT-HYD GAUGE	1
97	0712230	BOSS, TURNTABLE LOCK	1
98	0806994	HOUSE LOCK INDICATOR WELD	1
99	0810433	HHU CHAIN ROLLER BRACKET, LH	1
100	0810434	HHU CHAIN ROLLER BRACKET, RH	1
101	09000097	ILLUMINATED LEGEND ASSY-LT UP	1
102	09000135	ILLUMINATED LEGEND ASSY-RT UP	1
103	09001440	50K DRAG WINCH ASSY	1
104	09002243	VALVE ASSY, 1150 KNEE MAIN	1
105	09002244	VALVE ASSY, 1150 KNEE BOOM U/L	1
106	09002246	VALVE ASSY, PRESSURE REDUC	1
107	09002247	CONTROL ASSY, 11 HANDLE WV	1
108	09002910	PUMP KIT, 4K KNEE BOOM	1
109	09002949	ILLUM LEGEND LT 1150 KNEE	1
110	09003710	SUBFRAME ASSY, 1135 KNEE	1
111	09003733	WRECKER FRAME ASSY 1135	1
112	09003870	WINCH ASSY 1135 W/ 35K WINCH	1
113	09004266	U/L BOOM ASSEMBLY (SHORT)	1
114	0908418	KIT-MUDFLAP CENTURY ROTATOR	1
115	0910188	2-STAGE FRONT OUTRIGGER ASY	1
116	0910246	3-STAGE REAR OUTRIGGER ASSY	1
117	0910615	OUTRIGGER CONT VALVE KIT	1
118	0910935	XBAR ASY HRDWR-XHD 5X5 CENT	1
119	0911237	ILLUM LEGEND ASSY RH LWR WLV	1
120	0911324	RH CTL STATION ASSY 5 WINCH W	1
121	0911957	KIT, D-RING PARTS	2
122	0912071	ASSY, 1135 BOOM	1
123	124004464	ALUM HEEL PLATE-14" SDU4&COA	1
124	24773017	HOSE ASSEMBLY 140"LG	2
125	24773018	HOSE ASSEMBLY 140"LG	2
126	9018016	HOSE CLAMP HS-20 1 1/4"	4
127	9024041	SWITCH-ROCKER, LIGHTED 12V	2
128	9041402	1/2 NC X 1 1/4 HHCS PLT GR8	6
129	9041403	1/2 NC X 1 1/2 HHCS PL GR8	1
130	9402970	TOOLBOX MTG. PAD	1
131	942480011	PLATE,SLOT-SS REAR WASHER	2
132	AWS-6821-A	HOSE ASSY-PRESSURE	8
133	FC41	FITTING-90DEG BLKHD ELB W/ NUT	8
134	HC1291	FITTING, 4MJ-4MB STR THR	1

09003709, BASIC UNIT ASSEMBLY, 1135 KNEE BOOM

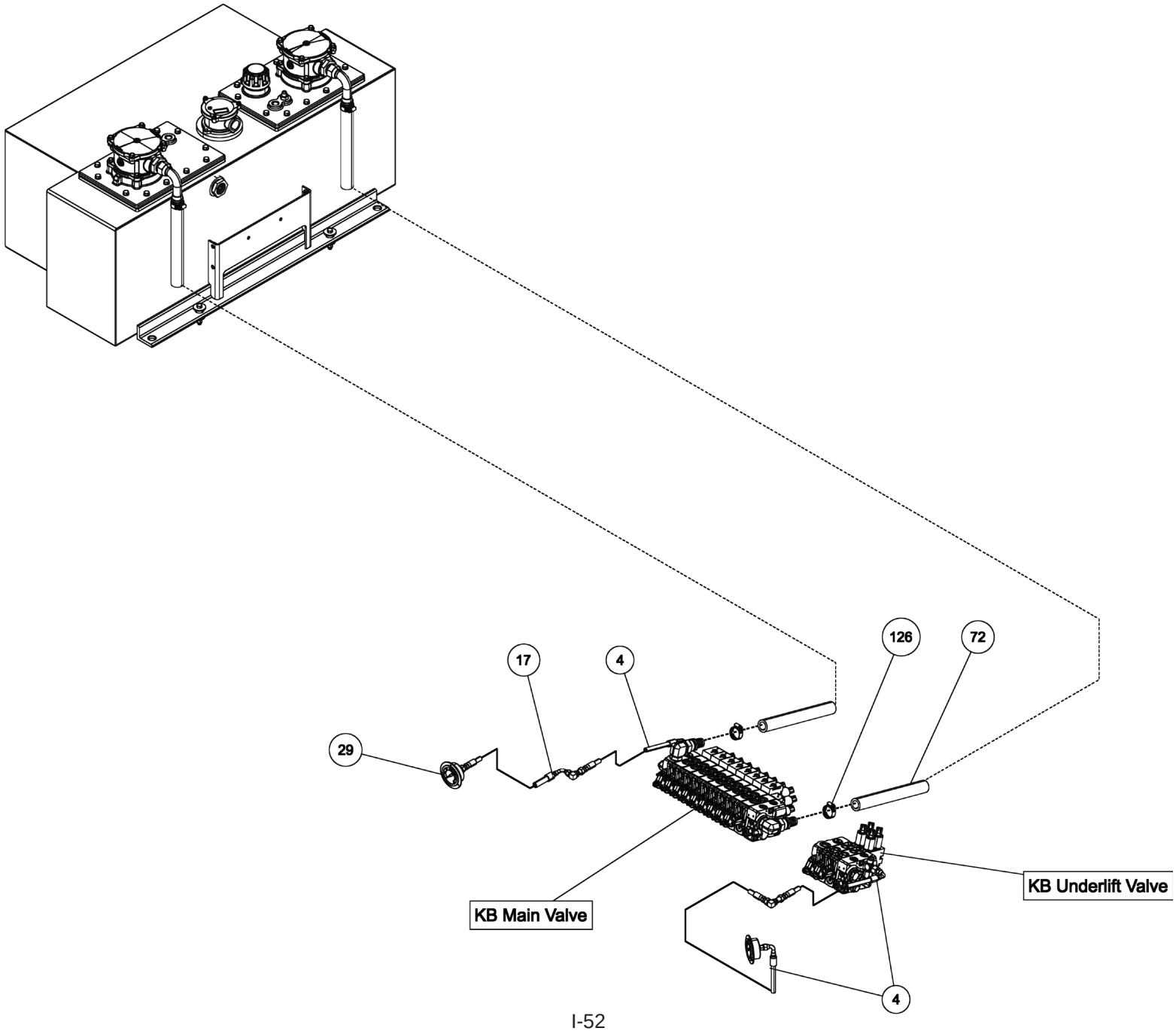

09003709, BASIC UNIT ASSEMBLY, 1135 KNEE BOOM

ITEM	PART NUMBER	DESCRIPTION	QTY
	09003709	BUA, 1135 KNEE BOOM	-
1	0300113	GREASE FITTING, 1/4-28 STR	1
2	03003419	HOSE, HYD 132" LG	1
3	03003420	HOSE, HYD 60" LG	1
4	03003421	HOSE, HYD 18"LG	4
5	03003424	HOSE, HYD 138"	1
6	03003425	HOSE, HYD 90" LG	4
7	03003426	HOSE, HYD 45" LG	6
8	0300364	CLAMP-HOSE,0.875"-2.75" 50"LBS	2
9	0300434	FITTING, HOSE BARB, 2	1
10	0300558	HOSE, SUCTION 2"ID 100R4 (C4)	1
11	0300835	KNOB-BOOM (UP-DOWN)	1
12	0300837	KNOB-BOOM (IN-OUT)	1
13	0300865	FITTING, CONNECTOR 8MJ-8MJ	1
14	0301113	HOSE HYD, 82"	2
15	0301377	FITTING, TEE,3/8" JIC	1
16	0301470	FITTING, 90ELB 6MJ-8MB90	3
17	0301473	HOSE HYD, 18" LG	1
18	0301522	ADAPTER, 6MJ-6MB	1
19	0301529	HOSE HYD, 58	2
20	03015922	STAUFF CLAMP, 3/8 TWIN	4
21	03016142	TUBE, HYD ASSY SF TO O/R	4
22	0301695	HOSE HYD, 91"	1
23	0301909	RECEPTACLE BOOT	1
24	0301946	FITTING, BLKHD CONNECT	3
25	0301947	FITTING, 45 DEG ADAPTER	1
26	0301948	HD 7 WAY TRAILER CONNECT	1
27	0301961	BALL VALVE 2	1
28	0302056	HOSE HYD, 183"	5
29	0302205	GAUGE, FLUSH MNTG-6000 PSI	2
30	0302367	PIPE NIPPLE - 2 X 4	1
31	0302372	HOSE HYD, 240" LG	4
32	0302534	FITTING, 45 DEG ELBOW	2
33	0302604	HOSE HYD, 44"	2
34	0302632	HOSE HYD, 40"	4
35	0302805	HOSE HYD, 10"	1
36	0302813	HOSE HYD, 108" LG	1
37	0302856	KNOB-TILT, 3/8-16 THREAD	1
38	0302881	HOSE HYD, 45"	1
39	0303170	HOSE, HYD. 75"	3
40	0303185	HOSE HYD, 66" LG.	4
41	0303188	HOSE HYD, 75" LG	1
42	0303339	HOSE HYD, 45" LG	1
43	0303340	HOSE HYD, 50" LG	1
44	0303379	KNOB, SWING CW - CCW	1
45	0303380	KNOB-UNDERLIFT (IN-OUT)	1

ITEM	PART NUMBER	DESCRIPTION	QTY
46	0303381	KNOB - UNDERLIFT (UP-DN)	1
47	0303391	HOSE 8AT2(8FJX-8FJ90) 110"	1
48	0303538	FITT, ADAPTER -BRASS 8FP-6MP	1
49	0303539	QUICK DISCONNECT 3/8 FPT	1
50	0304363	QUICK DISCONNECT 1/2 FPT	2
51	0306537	EMERGENCY SWITCH(RAMSEY)	2
52	0306540	ROTARY SELECT SWITCH OPER	1
53	0306921	PIPE PLUG, 2" SQ HD	1
54	0307052	WASHER, RUBBER 7/16X1 1/4X1/4	2
55	0307151	RUBBER FENDER	3
56	0307472	HOSE, HYD ASSY 24" LG	1
57	0307604	KNOB, RED LONG - SK0700-07	3
58	0310406	VALVE, SHUTTLE LS10-30-8T-N	1
59	0310456	PUSH BUTTN OPER W/MTG N/C	2
60	0310581	HOSE ASSY- 96" 8 fjx-10fjx90	4
61	0310956	TOOLBOX LH AL ROT TRI 2010 W/	1
62	0310957	TOOLBOX RH AL ROT TRI 2010 W/	1
63	0311191	ROLLER, POLY, 4" X 5/8"	2
64	0311417	HOSE, 196" 3/8 2 X STRAIGHT	2
65	0311426	HOSE ASSY, 80" 4FJX-4FJX45	1
66	0311500	LIGHT 6"OVAL REVERSE LED	2
67	0311502	LIGHT 6"OVAL CLEAR-AMBER LED	4
68	0311503	GROMMET, LIGHT 6" OVAL	1
69	0311514	LIGHT 2.5" CLEAR LENS-RED LED	2
70	0311516	GROMMET, LIGHT 2.5" ROUND	2
71	0312309	LIGHT 6" OVAL GLO-LT STT CLR/R	4
72	0313129	HOSE, 1 SUCTION 16C4	3
73	0400005	SCREW, 6-32X1/2 PRH SS	6
74	04000381	SS BHSCS 1/4-20 X 1	1
75	0400066	SCREW, 1/4-20X3/4 HHC GR5	2
76	0400078	SCREW, 1/4-20X2 HHC GR5	2
77	0400367	NUT, 1/4-20 LOK	2
78	0400379	NUT, 5/16-18 SPR J	1
79	0400451	WASHER, 1/4	2
80	0400452	LKWASHER, 1/4	2
81	0400454	WASHER, 1/4 SS	1
82	0400491	LKWASHER, 1/2	2
83	0400492	WASHER, 1/2	2
84	0400497	WASHER, 1/2 GR8	6
85	0400498	WASHER, 1/2X2X0.125	1
86	0400900	NUT, 1/2-13 LOK JAM	2
87	0402020	SCREW, 1/4-20X3/4 HHC SS	2
88	0402021	SCREW, 1/4-20X1 HHC SS	1
89	0402043	SCREW, 3/8-16X1-1/4 HHC SS	8
90	0402094	NUT, HEX 6-32 SS	6
91	0402111	LKWASHER, 1/4 SS	3

ITEM	PART NUMBER	DESCRIPTION	QTY
92	0402113	NUT, 1/4-20 LOK SS	2
93	0402114	NUT, 1/4-20 LOK REV SS	1
94	0402120	WASHER, 3/8 SS	8
95	0402123	NUT, 3/8-16 LOK SS	8
96	07005922	MOUNT-HYD GAUGE	1
97	0712230	BOSS, TURNTABLE LOCK	1
98	0806994	HOUSE LOCK INDICATOR WELD	1
99	0810433	HHU CHAIN ROLLER BRACKET, LH	1
100	0810434	HHU CHAIN ROLLER BRACKET, RH	1
101	09000097	ILLUMINATED LEGEND ASSY-LT UP	1
102	09000135	ILLUMINATED LEGEND ASSY-RT UP	1
103	09001440	50K DRAG WINCH ASSY	1
104	09002243	VALVE ASSY, 1150 KNEE MAIN	1
105	09002244	VALVE ASSY, 1150 KNEE BOOM U/L	1
106	09002246	VALVE ASSY, PRESSURE REDUC	1
107	09002247	CONTROL ASSY, 11 HANDLE WV	1
108	09002910	PUMP KIT, 4K KNEE BOOM	1
109	09002949	ILLUM LEGEND LT 1150 KNEE	1
110	09003710	SUBFRAME ASSY, 1135 KNEE	1
111	09003733	WRECKER FRAME ASSY 1135	1
112	09003870	WINCH ASSY 1135 W/ 35K WINCH	1
113	09004266	U/L BOOM ASSEMBLY (SHORT)	1
114	0908418	KIT-MUDFLAP CENTURY ROTATOR	1
115	0910188	2-STAGE FRONT OUTRIGGER ASY	1
116	0910246	3-STAGE REAR OUTRIGGER ASSY	1
117	0910615	OUTRIGGER CONT VALVE KIT	1
118	0910935	XBAR ASY HRDWR-XHD 5X5 CENT	1
119	0911237	ILLUM LEGEND ASSY RH LWR WLV	1
120	0911324	RH CTL STATION ASSY 5 WINCH W	1
121	0911957	KIT, D-RING PARTS	2
122	0912071	ASSY, 1135 BOOM	1
123	124004464	ALUM HEEL PLATE-14" SDU4&COA	1
124	24773017	HOSE ASSEMBLY 140"LG	2
125	24773018	HOSE ASSEMBLY 140"LG	2
126	9018016	HOSE CLAMP HS-20 1 1/4"	4
127	9024041	SWITCH-ROCKER, LIGHTED 12V	2
128	9041402	1/2 NC X 1 1/4 HHCS PLT GR8	6
129	9041403	1/2 NC X 1 1/2 HHCS PL GR8	1
130	9402970	TOOLBOX MTG. PAD	1
131	942480011	PLATE,SLOT-SS REAR WASHER	2
132	AWS-6821-A	HOSE ASSY-PRESSURE	8
133	FC41	FITTING-90DEG BLKHD ELB W/ NUT	8
134	HC1291	FITTING, 4MJ-4MB STR THR	1

09000097, ILLUMINATED LEGEND ASSEMBLY LH UPPER

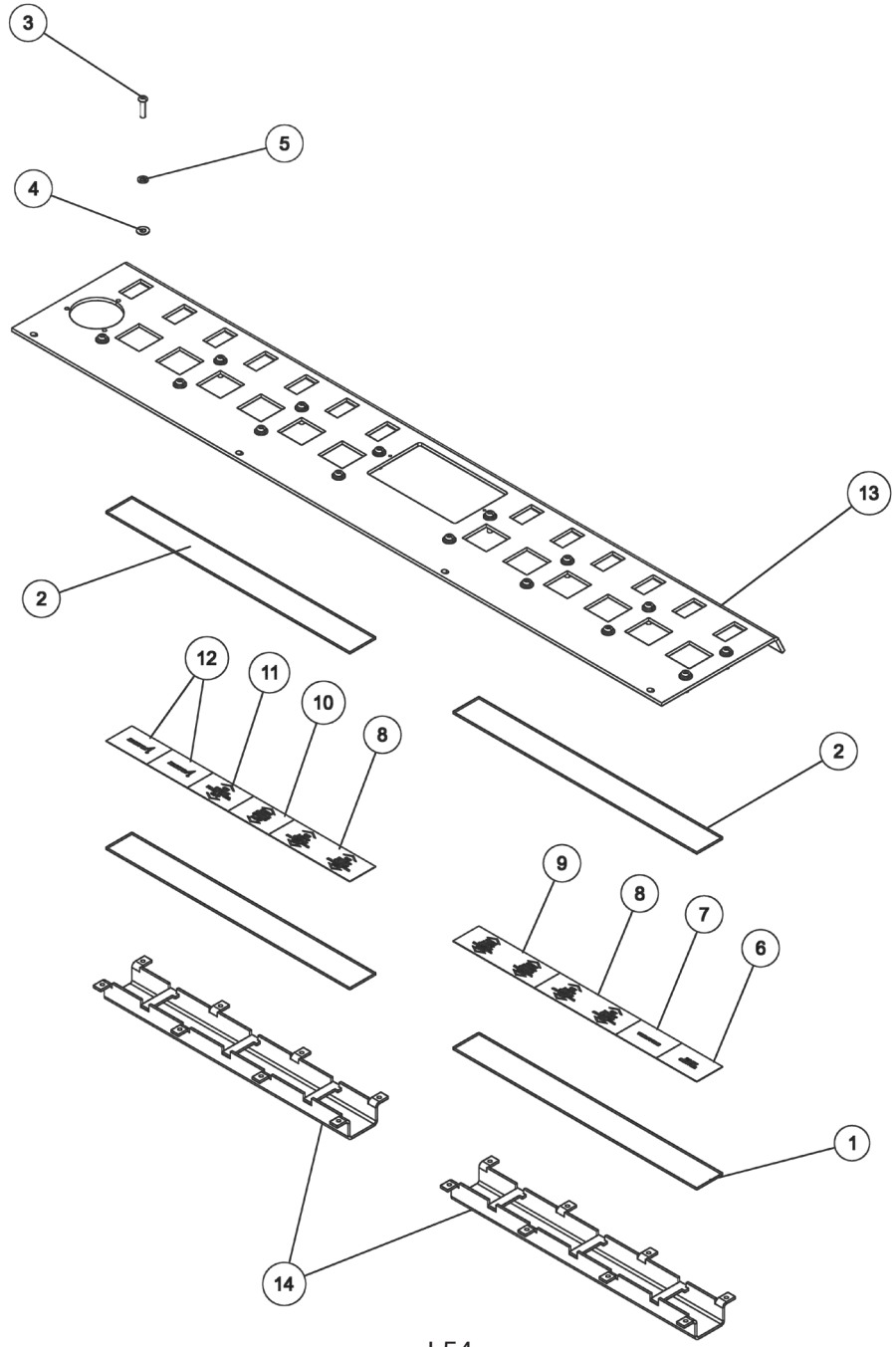

09000097, ILLUMINATED LEGEND ASSEMBLY LH UPPER

ITEM	PART NUMBER	DESCRIPTION	QTY
	09000097	ILLUMINATED LEGEND ASSY-LT UPP	-
1	0310004	PLASTIC, DUST COVER-CLEAR 16.5	2
2	0310005	PLASTIC, COLOR LENS - RED 16.5	2
3	0310040	FLEXLITE LED STRIP	2
4	0310041	FLEXLITE LED POWER WIRE	2
5	04000381	SS BHSCS 1/4-20 X 1	1
6	0400454	WASHER, 1/4 SS	1
7	0402111	LKWASHER, 1/4 SS	1
8	0501587	LEGEND, PANEL-BOOM	1
9	0501588	LEGEND, PANEL-THROTTLE	1
10	0501589	LEGEND, PANEL-CABLE ON/OFF	2
11	0501590	LEGEND, PANEL-CABLE HIGH/LOW	1
12	0501591	LEGEND, PANEL-CABLE SPEED	1
13	0501593	LEGEND, PANEL-CABLE FREE SPOOL	1
14	0501597	LEGEND, PANEL-BLANK MILLER LGO	2
15	0727012	APANEL, LH 5 WINCH ROT	1
16	0807057	CHANNEL,LIGHT&LEGEND WLMT 16.5	2

09000135, ILLUMINATED LEGEND ASSEMBLY RH UPPER

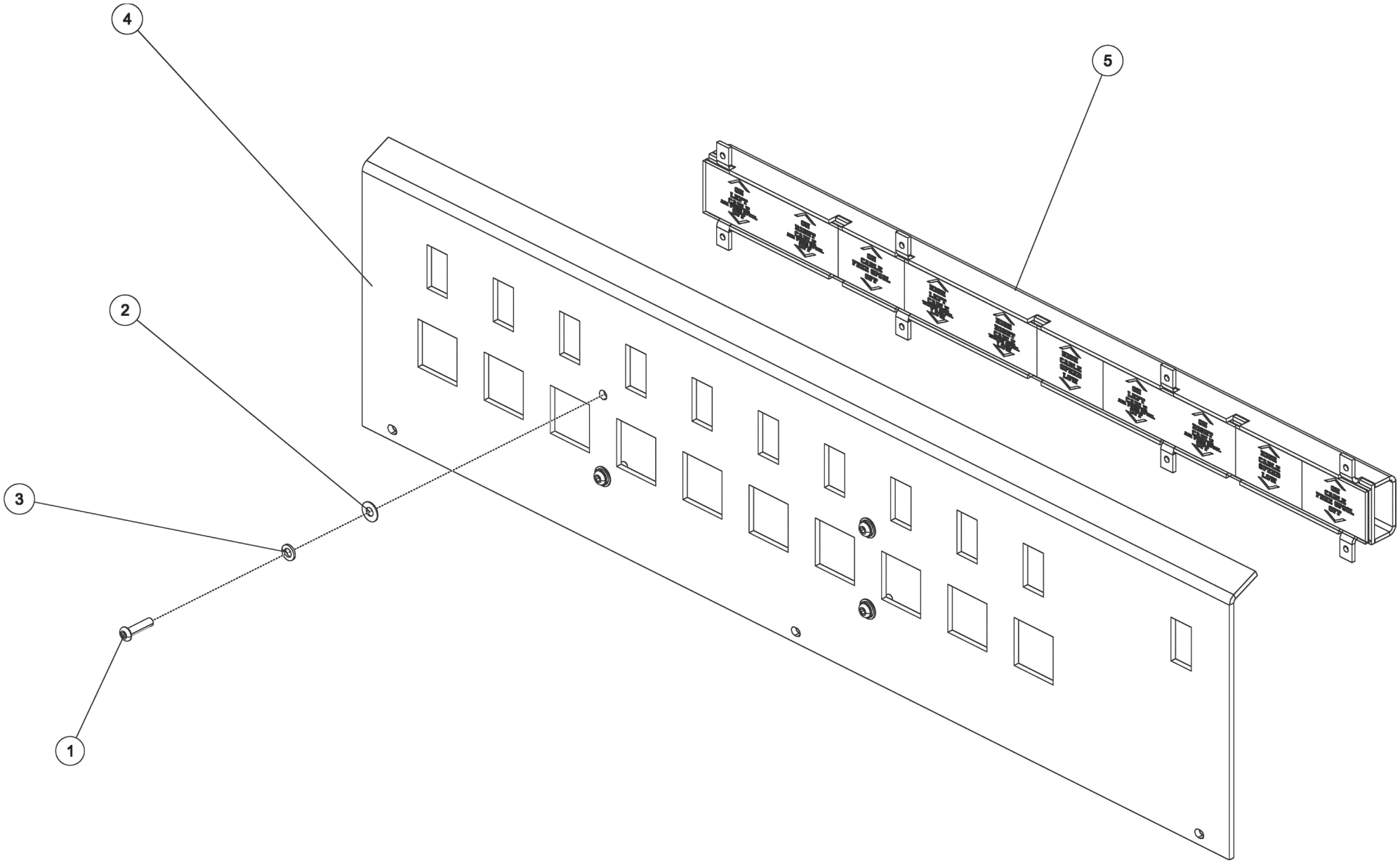

09000135, ILLUMINATED LEGEND ASSEMBLY RH UPPER

ITEM	PART NUMBER	DESCRIPTION	QTY
	09000135	ILLUMINATED LEGEND ASSY-RT UPP	-
1	04000381	SS BHSCS 1/4-20 X 1	4
2	0400454	WASHER, 1/4 SS	4
3	0402111	LKWASHER, 1/4 SS	4
4	0727010	APANEL, 10 SWITCH	1
5	09000139	ILLUMINATED LEGEND ASSY 27.5	1

09000139, ILLUMINATED LEGEND ASSEMBLY

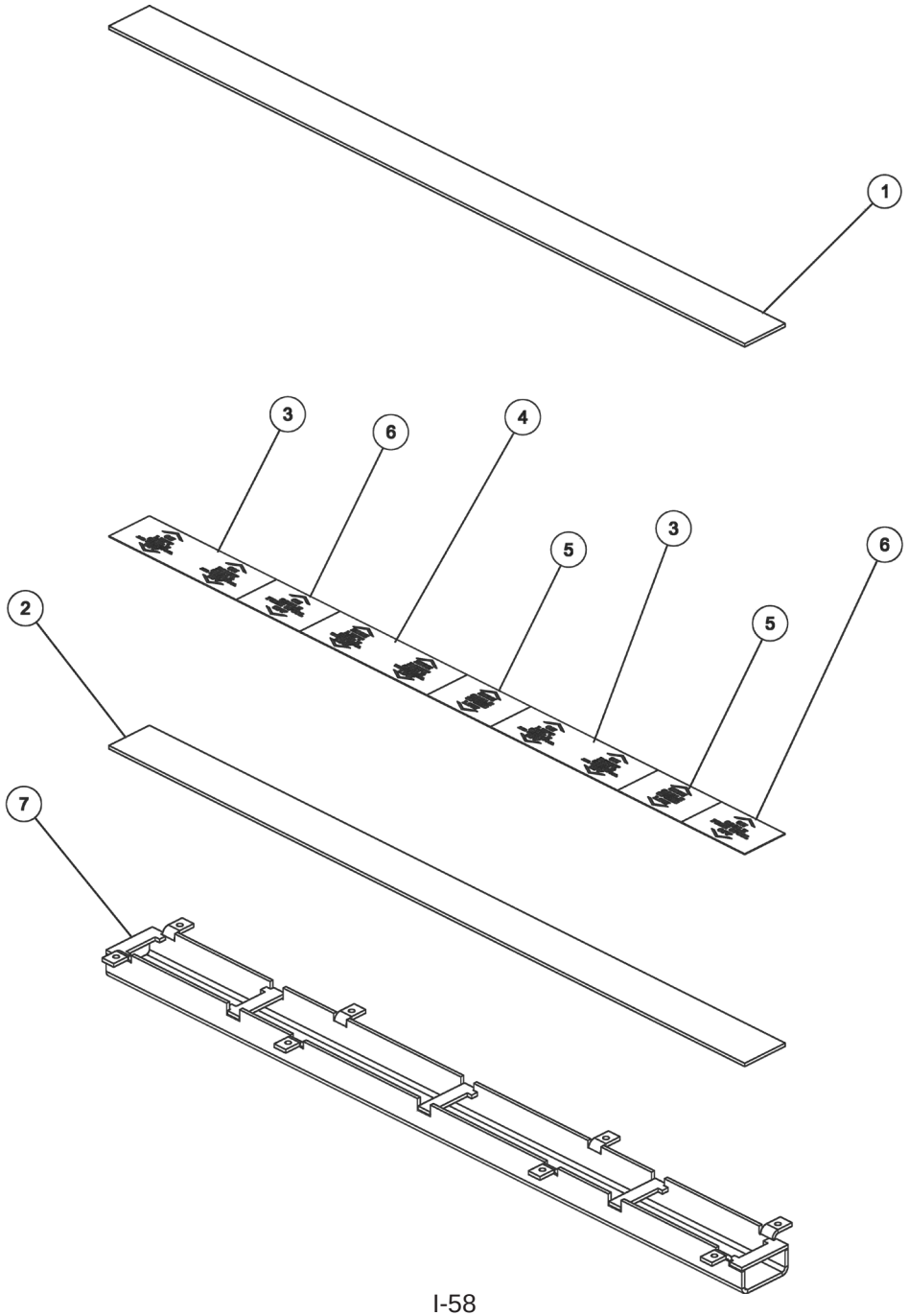

09000139, ILLUMINATED LEGEND ASSY

ITEM	PART NUMBER	DESCRIPTION	QTY
	09000139	ILLUMINATED LEGEND ASSY 27.5	-
1	0307971	PLASTIC, DUST COVER-CLEAR 27.5	1
2	0307975	PLASTIC, COLOR LENS - RED 27.5	1
3	0310040	FLEXLITE LED STRIP	1
4	0310041	FLEXLITE LED POWER WIRE	1
5	0310042	FLEXLITE LED JUMPER WIRE	1
6	0501589	LEGEND, PANEL-CABLE ON/OFF	2
7	0501590	LEGEND, PANEL-CABLE HIGH/LOW	1
8	0501591	LEGEND, PANEL-CABLE SPEED	2
9	0501593	LEGEND, PANEL-CABLE FREE SPOOL	2
10	0807046	CHANNEL,LIGHT&LEGEND WLMT 27.5	1

09002243, VALVE ASSEMBLY, 1150 KNEE MAIN

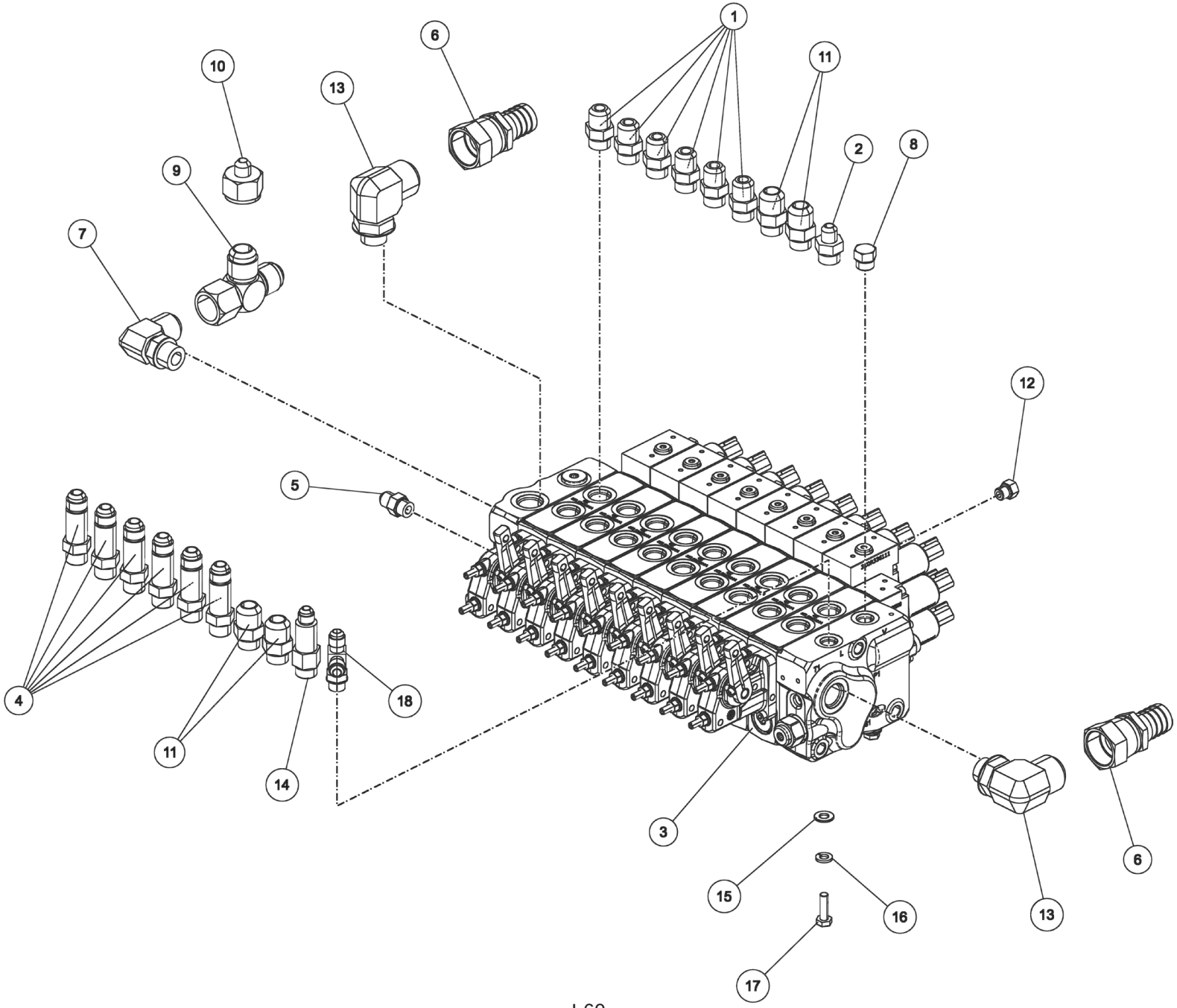

09002243, VALVE ASSEMBLY, 1150 KNEE MAIN

ITEM	PART NUMBER	DESCRIPTION	QTY
	09002243	VALVE ASSY, 1150 KNEE MAIN	-
1	0300041	CONNECTOR, 8MJ-8MB	6
2	0300044	FITT, HYD CONN. 6MJ-8MB	1
3	03001779	VALVE, MAIN CONTROL	1
4	0301445	FITTING, EXTENDED	6
5	0301522	ADAPTER, 6MJ-6MB	1
6	0301767	FITTING, HOSE BARB 1FJIX	2
7	0302085	FITTING, 90 DEG ADPTR	1
8	0302507	6 SAE PLUG (6MB PLUG)	1
9	0302826	FITTING, TEE	1
10	0302829	FITTING, ADAPTOR	1
11	0303079	ADAPTER, 10MJ-8MB	4
12	0303886	4 MB-PLUG	1
13	0307444	FITTING, 16MJ-10MB90	2
14	0310289	FITTING-LONG ADAPTER 6MJ-8MBLL	1
15	0400463	WASHER, 5/16	3
16	0400464	LKWASHER, 5/16	3
17	0410540	SCREW, M8-1.25X25 HHC 8.8	3
18	9012594	FITT,HYD RUN TEE, 6MJx6MBx6MJ	1

09002244, VALVE ASSEMBLY 1150 KNEEBOOM U/L

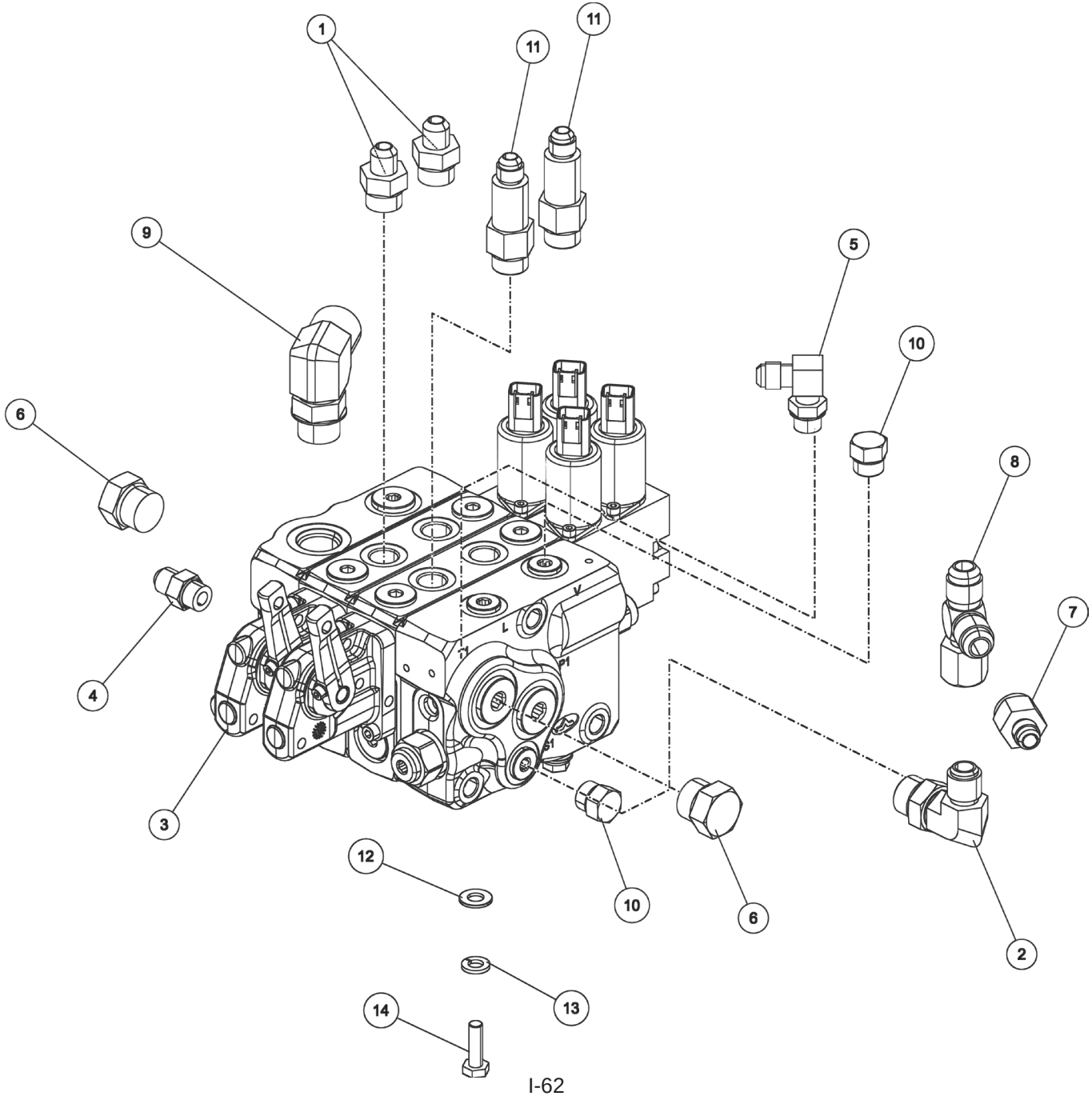

09002244, VALVE ASSEMBLY 1150 KNEEBOOM U/L

ITEM	PART NUMBER	DESCRIPTION	QTY
	09002244	VALVE ASSY, 1150 KNEE BOOM U/L	-
1	0300044	FITT, HYD CONN. 6MJ-8MB	2
2	0300052	FITTING, ELB 8MJ-10MB 90	1
3	03001780	VALVE, 4K U/L CONTROL	1
4	0301522	ADAPTER, 6MJ-6MB	1
5	0301620	FITTING, HYD. 6MJ - 6MB90	1
6	0301783	FIT-STR THRD O-RING PLUG 10MB	2
7	0301995	FITTING, ADAPTER STR	1
8	0302052	TEE, 8MJ-8FJX-8MJ RUN	1
9	0302085	FITTING, 90 DEG ADPTR	1
10	0302507	6 SAE PLUG (6MB PLUG)	2
11	0310289	FITTING-LONG ADAPTER 6MJ-8MBLL	2
12	0400463	WASHER, 5/16	3
13	0400464	LKWASHER, 5/16	3
14	0410540	SCREW, M8-1.25X25 HHC 8.8	3

09002246, VALVE ASSEMBLY, PRESSURE REDUCING

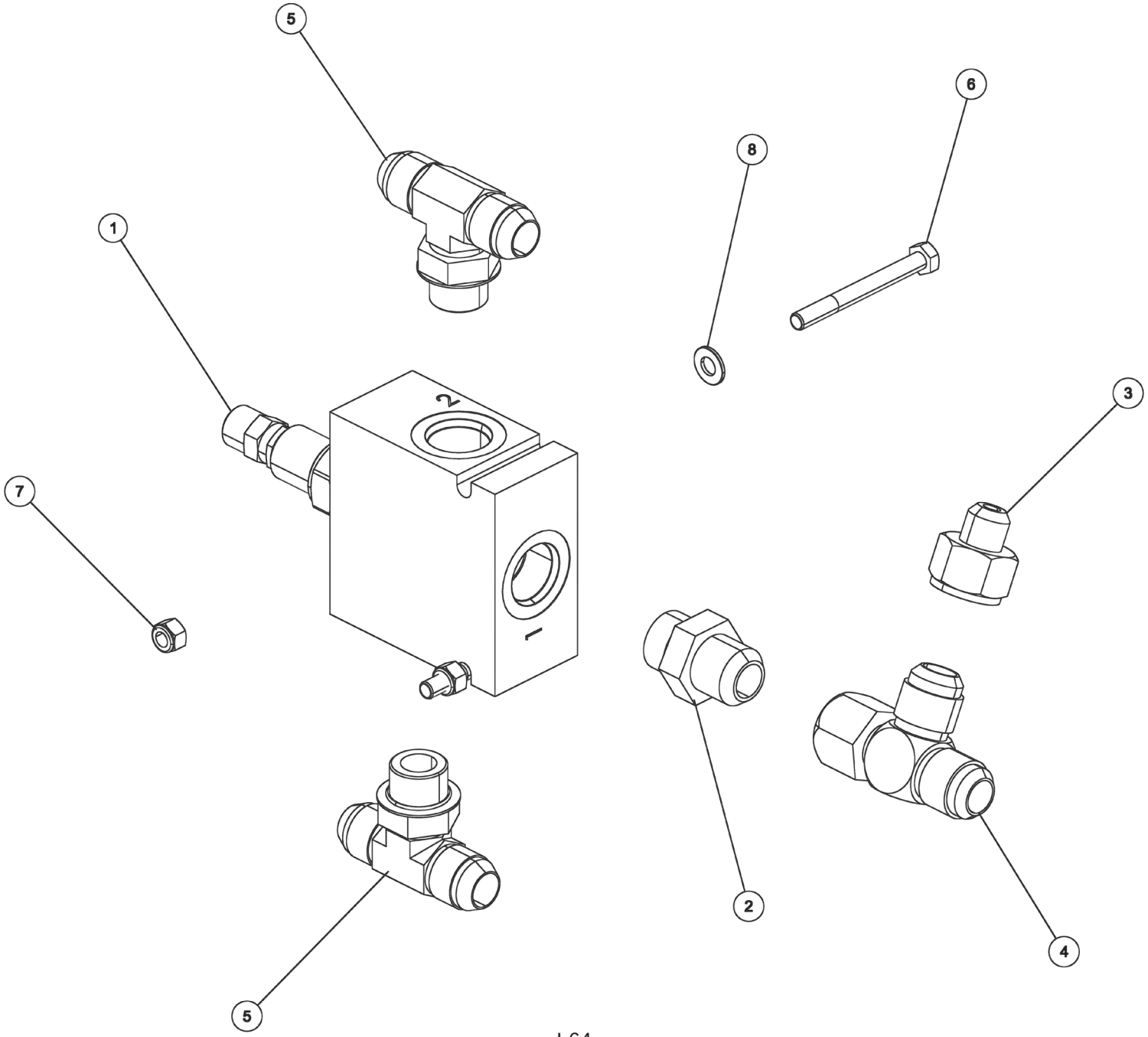

09002246, VALVE ASSEMBLY, PRESSURE REDUCING

ITEM	PART NUMBER	DESCRIPTION	QTY
	09002246	VALVE ASSY, PRESSURE REDUCING	-
1	03001781	VALVE, PRESSURE REDUCING	1
2	0300400	CONNECTOR, 12MJ-12MB	1
3	0301372	FITTING, ST.CONN. 12FJ-8MJ	1
4	0302826	FITTING, TEE	1
5	0310520	FITTING - TEE 12MJ-12MJ-12MB	2
6	0400114	SCREW, 5/16-18X3 HHC GR5	2
7	0400382	NUT, 5/16-18 LOK	2
8	0400463	WASHER, 5/16	2

09002247, CONTROL ASSEMBLY, 11 HANDLE WV

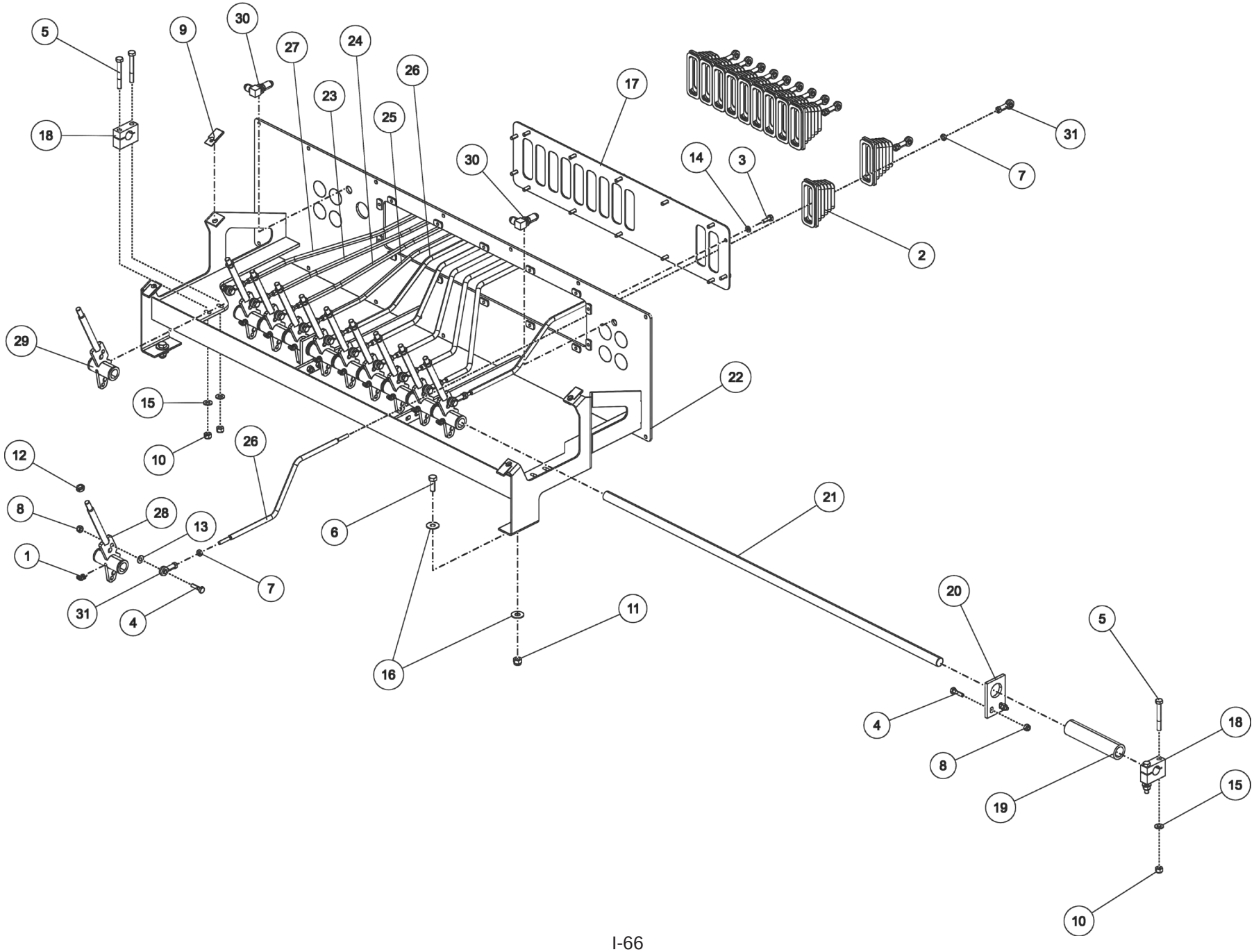

09002247, CONTROL ASSEMBLY, 11 HANDLE WV

ITEM	PART NUMBER	DESCRIPTION	QTY
	09002247	CONTROL ASSY, 11 HANDLE WV	-
1	0302726	GREASE FITTING, 1/4-28 45	11
2	0310148	BOOT, CONTROL HANDLE	11
3	0400066	SCREW, 1/4-20X3/4 HHC GR5	14
4	0400070	SCREW, 1/4-20X1 HHC GR5	15
5	0400107	SCREW, 5/16-18X2-1/2 HHC GR5	4
6	0400126	SCREW, 3/8-16X1 HHC GR5	2
7	0400365	NUT, 1/4-28 HEX	22
8	0400367	NUT, 1/4-20 LOK	15
9	0400379	NUT, 5/16-18 SPR J	4
10	0400382	NUT, 5/16-18 LOK	4
11	0400392	NUT, 3/8-16 LOK	2
12	0400393	NUT, 3/8-16 JAM	11
13	0400451	WASHER, 1/4	11
14	0400452	LKWASHER, 1/4	14
15	0400463	WASHER, 5/16	4
16	0400480	WASHER, 3/8	4
17	07002691	PLATE, CONTROL ASSEMBLY BACK	1
18	0711235	CLAMP, SHAFT CONTROL BOX	2
19	0717206	TUBE - 1.25 OD SPACER	1
20	0723378	PLATE-PIN SUPPORT	2
21	0724669	PIN CONTROL HANDLE	1
22	08002068	CONTROL FRAME WELDMENT	1
23	0807980	CONTROL ROD WELDMENT	2
24	0807981	CONTROL ROD WELDMENT	2
25	0807982	CONTROL ROD WELDMENT	2
26	0807983	CONTROL ROD WELDMENT	4
27	0807984	CONTROL ROD WELDMENT	1
28	0907441	CONTROL HANDLE ASSY - SHORT	10
29	0911240	CTL HANDLE ASSY-SPL	1
30	FC41	FITTING-90DEG BLKHD ELB W/ NUT	2
31	HD0900	BEARING, ROD END, 1/4-28	22

09002910, PUMP KIT, 4K KNEE BOOM

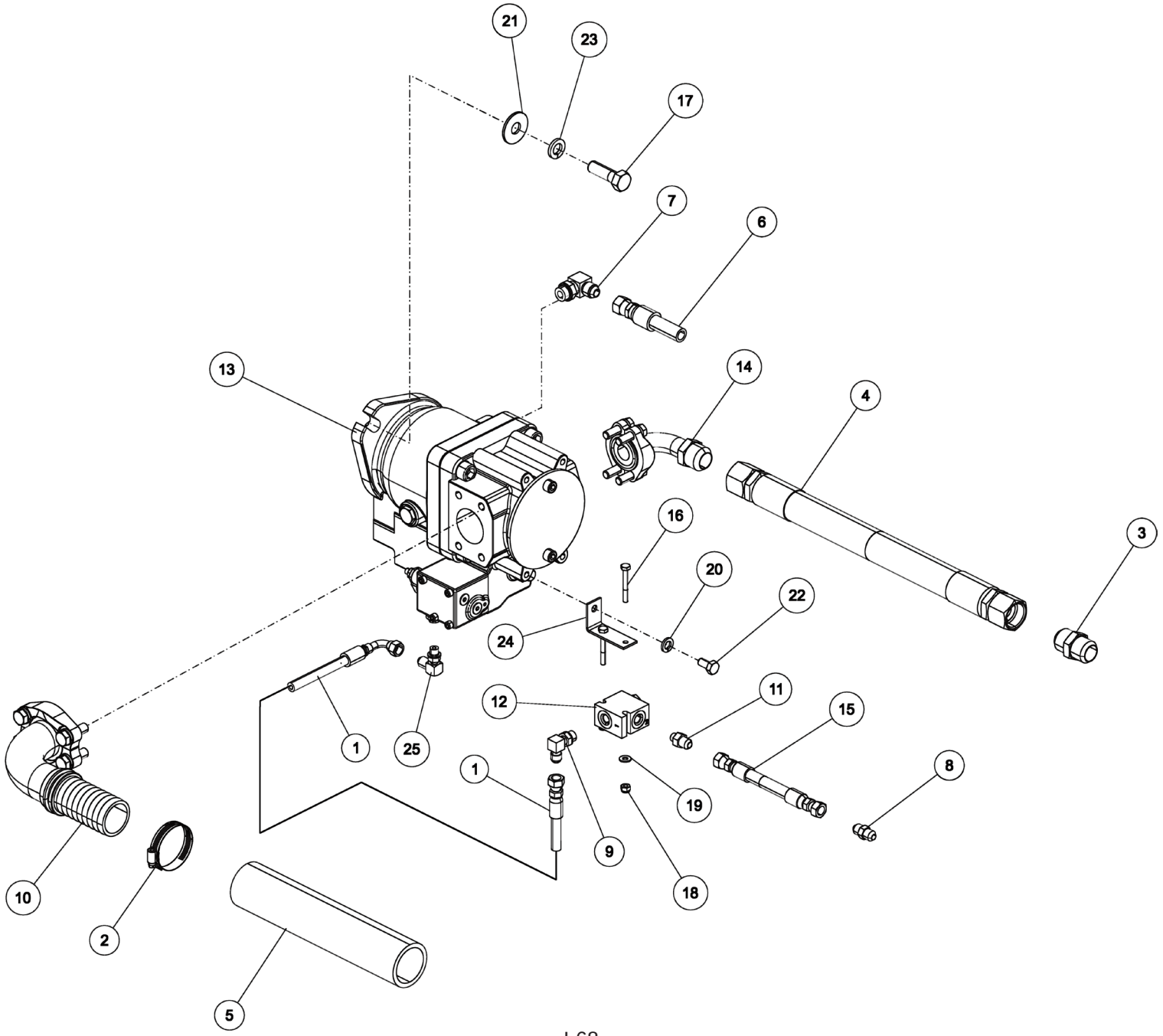

09002910, PUMP KIT, 4K KNEE BOOM

ITEM	PART NUMBER	DESCRIPTION	QTY
	09002910	PUMP KIT, 4K KNEE BOOM	-
1	03003421	HOSE, HYD 18"LG	1
2	0300364	CLAMP-HOSE,0.875"-2.75" 50"LBS	1
3	0300431	CONNECTOR, 16MJ-16MJ	1
4	03005247	HOSE, HYD 132" LG	1
5	0300558	HOSE, SUCTION 2"ID 100R4 (C4)	1
6	0301113	HOSE HYD, 82"	1
7	0301388	ELBOW, 8MJ-8MB90	1
8	0301422	FITTING, 6MJ-6MJ SMALL	1
9	0301620	FITTING, HYD. 6MJ - 6MB90	1
10	0301637	FITTING, FL - FLANGE	1
11	0302695	ADAPTER, 6MJ-4MB	1
12	0307311	FILTER SCREEN - INLINE	1
13	0310199	PUMP, PISTON - KAWASAKI	1
14	0310200	HYD FITTING,ELL 1 W/FLANGE KIT	1
15	0311418	HOSE, 90" 3/8 2 X STRAIGHT	1
16	0400078	SCREW, 1/4-20X2 HHC GR5	2
17	0400260	SCREW, 5/8-11X2 HHC GR5	2
18	0400367	NUT, 1/4-20 LOK	2
19	0400451	WASHER, 1/4	2
20	0400487	LKWASHER, 7/16	1
21	0400506	WASHER, 5/8	2
22	0400508	LKWASHER, 5/8	2
23	0400710	SCREW, M10-1.5X20 HHC 10.9	1
24	0730323	BRACKET, FILTER SCREEN	1
25	IC209	FTG-90DEG ADPTR 1/4 ORB	1

09002949, ILLUMINATED LEGEND ASSEMBLY LH

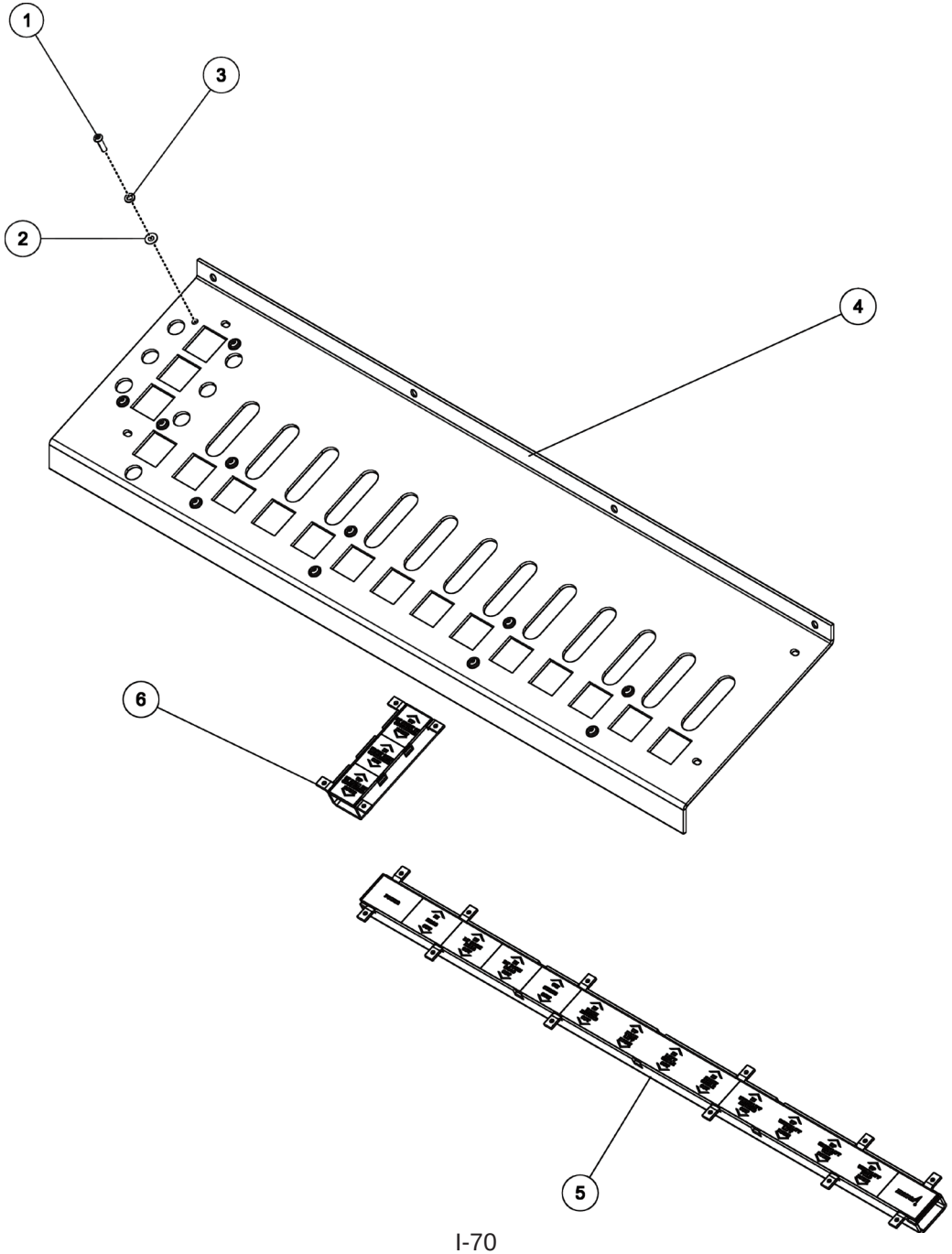

09002949, ILLUMINATED LEGEND ASSEMBLY LH

ITEM	PART NUMBER	DESCRIPTION	QTY
	09002949	ILLUM LEGEND LT 1150 KNEE	-
1	04000381	SS BHSCS 1/4-20 X 1	12
2	0400454	WASHER, 1/4 SS	12
3	0402111	LKWASHER, 1/4 SS	12
4	0727008	APANEL, CONTROL 13 HANDLE	1
5	09002950	ILLUM LEGEND ASSY LT 1150 KNEE	1
6	0908745	ILLUMINATED LEGEND ASSY 6	1

09002950, ILLUMINATED LEGEND ASSY

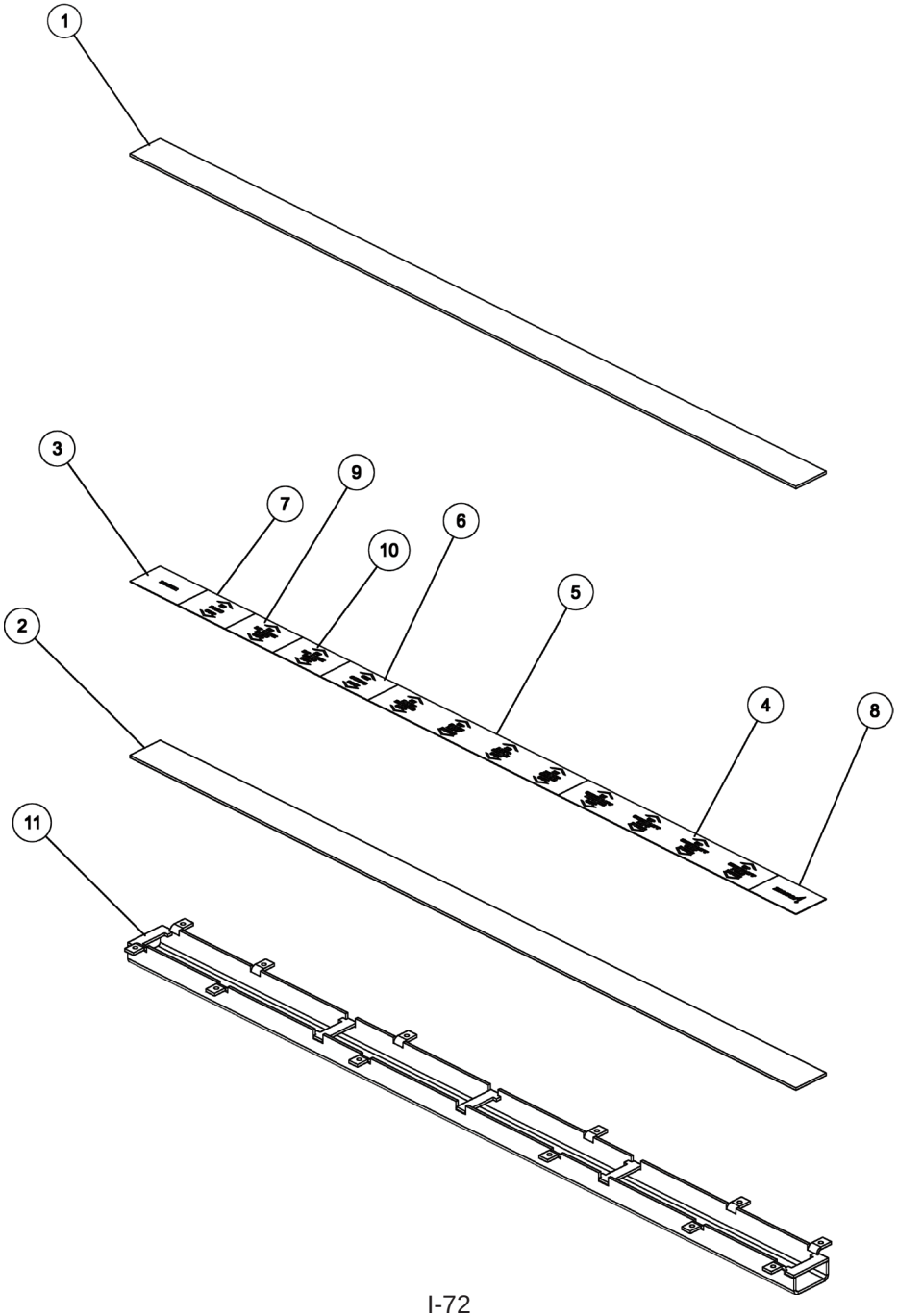

09002950, ILLUMINATED LEGEND ASSY

ITEM	PART NUMBER	DESCRIPTION	QTY
	09002950	ILLUM LEGEND ASSY LT 1150 KNEE	-
1	0310040	FLEXLITE LED STRIP	1
2	0310041	FLEXLITE LED POWER WIRE	1
3	0310042	FLEXLITE LED JUMPER WIRE	2
4	0310171	PLASTIC, COLOR LENS - CLEAR	1
5	0310172	PLASTIC, DUST COVER-RED	1
6	0310184	JUMPER WIRE, 15 FLEXLIGHT	1
7	0501582	LEGEND, PANEL-POWER	1
8	0501583	LEGEND, PANEL-UNDERLIFT	1
9	0501584	LEGEND, PANEL-BOOM/CABLE	1
10	0501585	LEGEND, PANEL-SWING	1
11	0501586	LEGEND, PANEL-DRAG	1
12	0501597	LEGEND, PANEL-BLANK MILLER LGO	1
13	0501621	LEGEND,PANEL- LT BOOM DRAG	1
14	0501622	LEGEND,PANEL- RT BOOM DRAG	1
15	0807202	CHANNEL,LIGHT&LEGEND WLMT 38.5	1

0908745, ILLUMINATED LEGEND ASSY

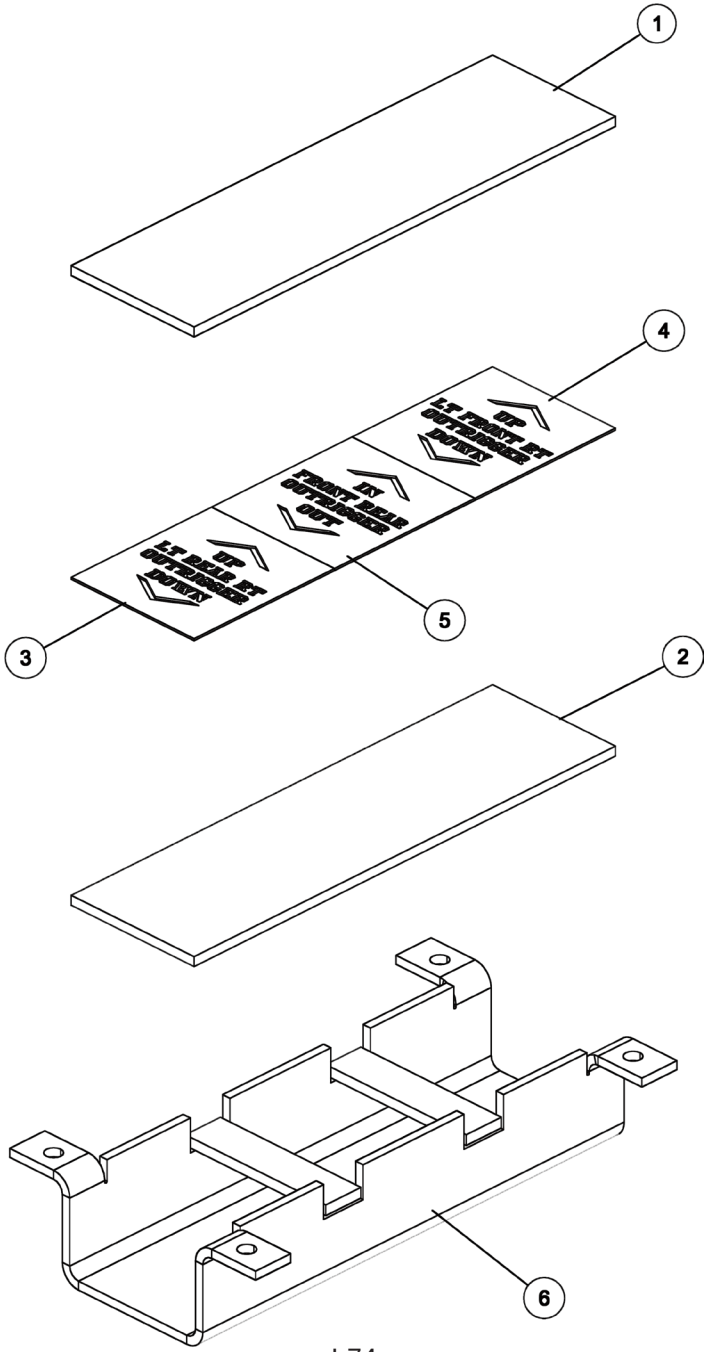

0908745, ILLUMINATED LEGEND ASSY

ITEM	PART NUMBER	DESCRIPTION	QTY
	0908745	ILLUMINATED LEGEND ASSY 6	-
1	0307972	PLASTIC, DUST COVER-CLEAR 6	1
2	0307976	PLASTIC, COLOR LENS - RED 6	1
3	0501579	LEGEND, PANEL-REAR OUTRIGGER	1
4	0501580	LEGEND, PANEL-FRONT OUTRIGGER	1
5	0501581	LEGEND, PANEL-FRT/REAR OUTRIG	1
6	0807047	CHANNEL, LIGHT&LEGENDS WLMT 6	1

09003710, SUBFRAME ASSEMBLY, 1135 KNEE BOOM

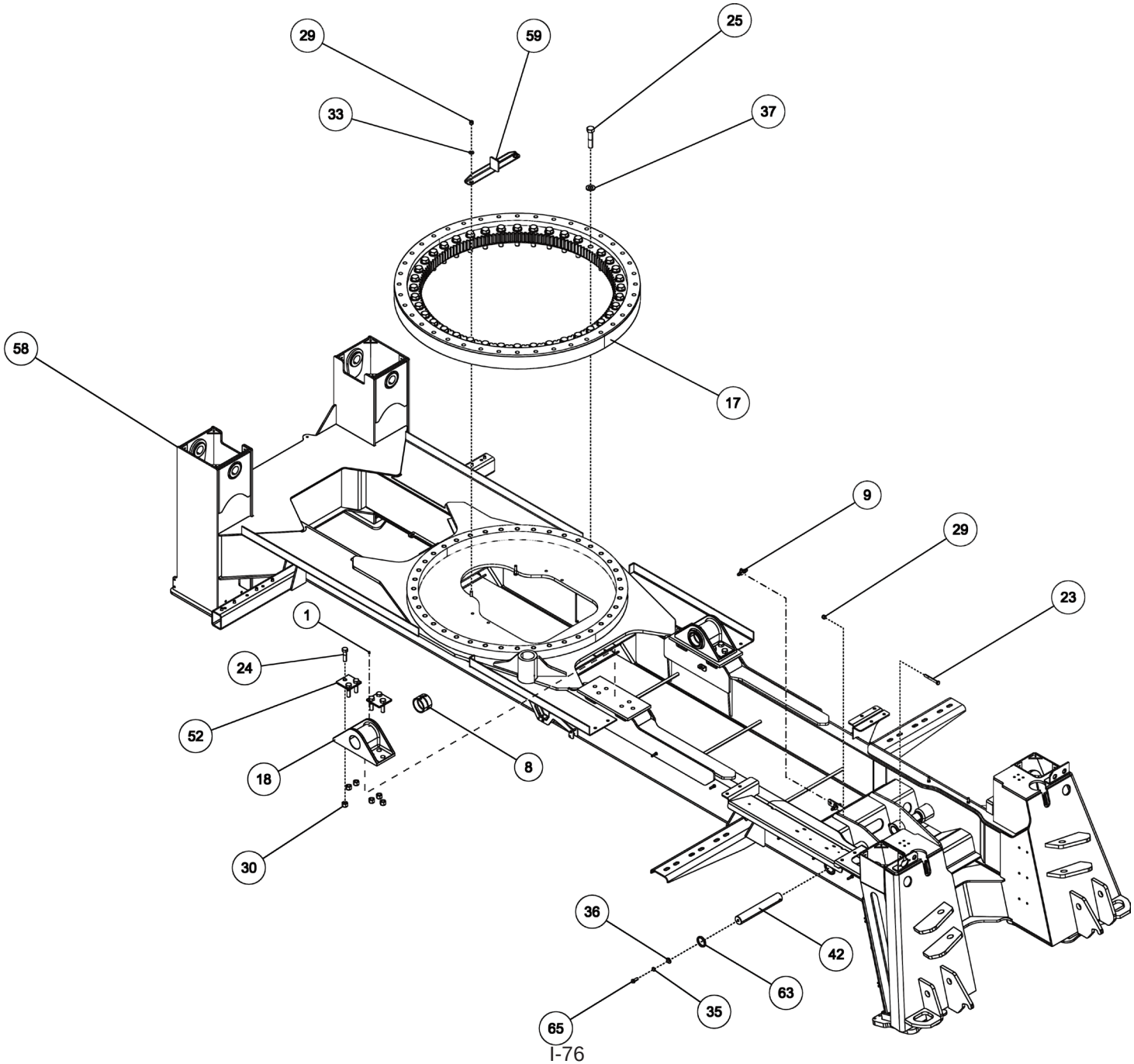

09003710, SUBFRAME ASSEMBLY, 1135 KNEE BOOM

ITEM	PART NUMBER	DESCRIPTION	QTY
	09003710	SUBFRAME ASSY, 1135 KNEE	-
1	0300113	GREASE FITTING, 1/4-28 STR	3
2	0300229	FITTING, ELB 8MJ-8MP90	1
3	0301368	ADAPTER, 16MB-12MJ	1
4	0301470	FITTING, 90ELB 6MJ-8MB90	4
5	0301696	FITTING, ELB 90 DEG 6MJ-6FJX90	4
6	0301781	FITTING, SWV NUT RUN TEE	1
7	0302170	FITTING, SWV 90 DEG BENT	2
8	0302538	BUSHING - U/L	2
9	0302575	FITTING-BULKHEAD RUN TEE	2
10	0302727	FITTING, HYD CONN	3
11	0302826	FITTING, TEE	1
12	0310397	VALVE, DIVERTER WALVOIL	2
13	0310398	HANDLE, DIVERTER VALVE	2
14	0310432	FITTING - ADAPTER 16MJ-20MB	2
15	0310480	FITTING - BULKHEAD -6 UNION	4
16	0310637	PLUG, HOLE	2
17	0312570	BEARING - ROTATOR 1130/1140	1
18	0312575	BOOM PIVOT BRKT-MACHINED	2
19	0400070	SCREW, 1/4-20X1 HHC GR5	8
20	0400109	SCREW, 5/16-18X1 HHC GR5	4
21	0400122	SCREW, 3/8-16X1-1/4 HHC GR5	6
22	0400132	SCREW, 3/8-16X1-1/2 HHC GR5	16
23	0400237	SCREW, 1/2-13X4 HHC GR5	2
24	0400286	SCREW, 3/4-10X2-3/4 HHC GR8	12
25	0400333	SCREW, 1-8X4-1/2 HHC GR8	40
26	0400367	NUT, 1/4-20 LOK	6
27	0400379	NUT, 5/16-18 SPR J	8
28	0400392	NUT, 3/8-16 LOK	6
29	0400408	NUT, 1/2-13 LOK	4
30	0400431	NUT, 3/4-10 LOK GR8	12
31	0400451	WASHER, 1/4	12
32	0400452	LKWASHER, 1/4	8

ITEM	PART NUMBER	DESCRIPTION	QTY
33	0400467	WASHER, SAE 1/2" HARDENED PL	2
34	0400480	WASHER, 3/8	6
35	0400491	LKWASHER, 1/2	10
36	0400497	WASHER, 1/2 GR8	2
37	0400522	WASHER, 1-1/16X2X1/8 TH YZ	40
38	0400980	SCREW, 3/8-16X1 FHS	12
39	0402032	SCREW, 5/16-18X1 HHC SS	4
40	0402118	LKWASHER, 5/16 SS	8
41	0402121	LKWASHER, 3/8 SS	16
42	07002416	PIN, U/L LIFT CYLINDER BASE	2
43	07002417	COVER, LEFT CHAIN BOX	1
44	07002418	COVER, RIGHT CAHIN BOX	1
45	07002692	FLOOR SHEET, MID CENTER COVER	1
46	07002693	FLOOR SHEET, LEFT MID DECK	1
47	07002696	FLOOR SHEET, RIGHT MID DECK	1
48	07002697	FLOOR SHEET, LEFT REAR DECK	1
49	07002698	FLOOR SHEET, RIGHT REAR DECK	1
50	07002699	CHANNEL, VALVE COVER	1
51	07008501	PLATE, FRONT HYD COVER	1
52	0714581	PLATE, BOLTING	4
53	0721896	PLATE - SPACER	4
54	0722002	PLATE - REAR O/R COVER	2
55	0722173	PLATE - VALVE MOUNTING	2
56	0722381	ANGLE - BULKHEAD	2
57	0724476	PAD - NYLATORN - BBOM GUIDE	2
58	08003247	SUBFRAME WLMT, 1135/1140 KNEE	1
59	0807433	SWING LIMIT ANGLE WELDMENT	1
60	0910260	FRONT OUTRIGGER INSTALLATION	1
61	0910430	HOUSE LOCK ASSEMBLY - 1140	1
62	0911857	TANK ASSY	1
63	26687634	THRUST WASHER	2
64	9041010	1/4 NC X 2 1/4 HHCS GR8	6
65	9041402	1/2 NC X 1 1/4 HHCS PLT GR8	10

09003710, SUBFRAME ASSEMBLY, 1135 KNEE BOOM

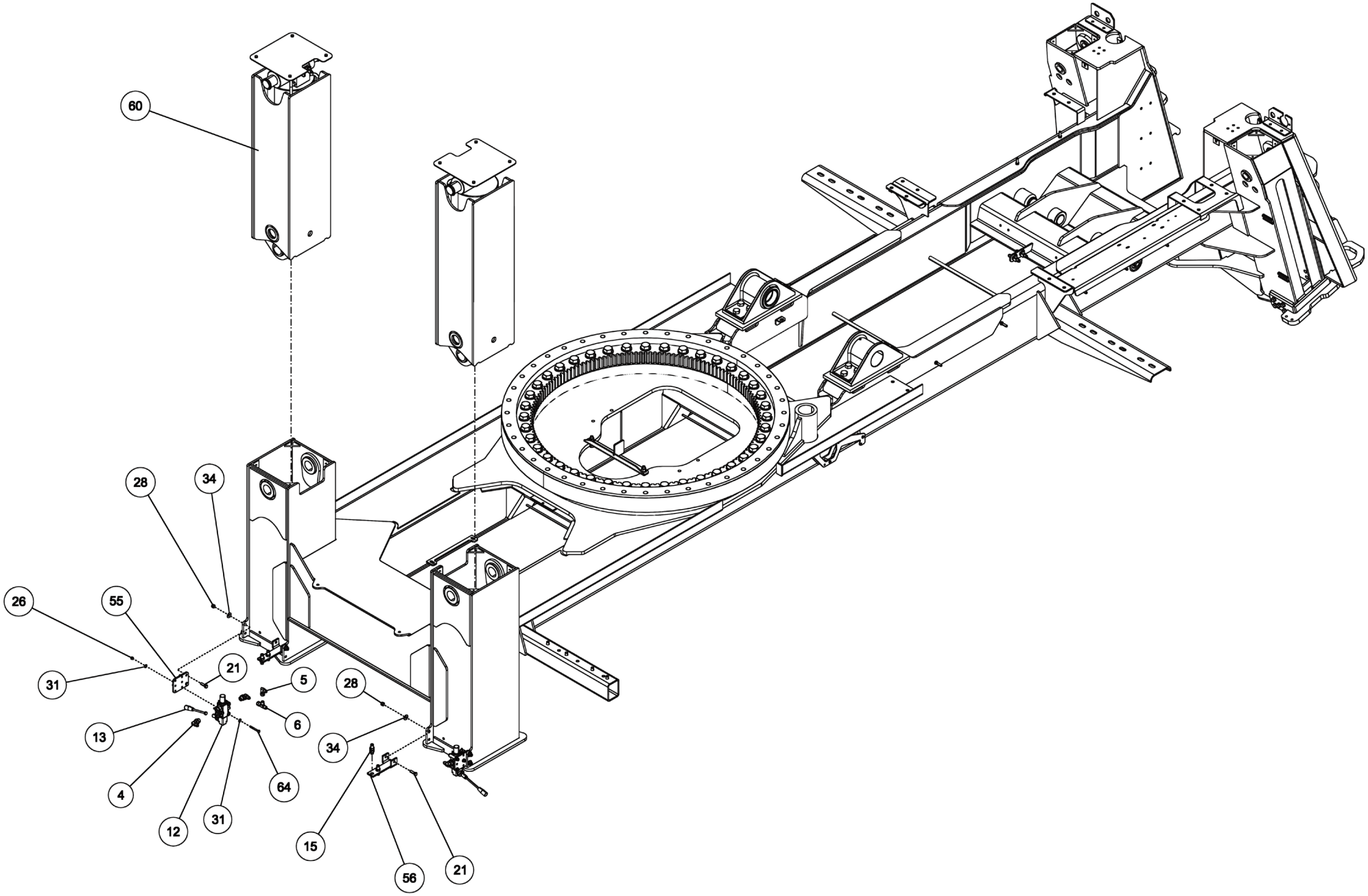

09003710, SUBFRAME ASSEMBLY, 1135 KNEE BOOM

ITEM	PART NUMBER	DESCRIPTION	QTY
	09003710	SUBFRAME ASSY, 1135 KNEE	-
1	0300113	GREASE FITTING, 1/4-28 STR	3
2	0300229	FITTING, ELB 8MJ-8MP90	1
3	0301368	ADAPTER, 16MB-12MJ	1
4	0301470	FITTING, 90ELB 6MJ-8MB90	4
5	0301696	FITTING, ELB 90 DEG 6MJ-6FJX90	4
6	0301781	FITTING, SWV NUT RUN TEE	1
7	0302170	FITTING, SWV 90 DEG BENT	2
8	0302538	BUSHING - U/L	2
9	0302575	FITTING-BULKHEAD RUN TEE	2
10	0302727	FITTING, HYD CONN	3
11	0302826	FITTING, TEE	1
12	0310397	VALVE, DIVERTER WALVOIL	2
13	0310398	HANDLE, DIVERTER VALVE	2
14	0310432	FITTING - ADAPTER 16MJ-20MB	2
15	0310480	FITTING - BULKHEAD -6 UNION	4
16	0310637	PLUG, HOLE	2
17	0312570	BEARING - ROTATOR 1130/1140	1
18	0312575	BOOM PIVOT BRKT-MACHINED	2
19	0400070	SCREW, 1/4-20X1 HHC GR5	8
20	0400109	SCREW, 5/16-18X1 HHC GR5	4
21	0400122	SCREW, 3/8-16X1-1/4 HHC GR5	6
22	0400132	SCREW, 3/8-16X1-1/2 HHC GR5	16
23	0400237	SCREW, 1/2-13X4 HHC GR5	2
24	0400286	SCREW, 3/4-10X2-3/4 HHC GR8	12
25	0400333	SCREW, 1-8X4-1/2 HHC GR8	40
26	0400367	NUT, 1/4-20 LOK	6
27	0400379	NUT, 5/16-18 SPR J	8
28	0400392	NUT, 3/8-16 LOK	6
29	0400408	NUT, 1/2-13 LOK	4
30	0400431	NUT, 3/4-10 LOK GR8	12
31	0400451	WASHER, 1/4	12
32	0400452	LKWASHER, 1/4	8

ITEM	PART NUMBER	DESCRIPTION	QTY
33	0400467	WASHER, SAE 1/2" HARDENED PL	2
34	0400480	WASHER, 3/8	6
35	0400491	LKWASHER, 1/2	10
36	0400497	WASHER, 1/2 GR8	2
37	0400522	WASHER, 1-1/16X2X1/8 TH YZ	40
38	0400980	SCREW, 3/8-16X1 FHS	12
39	0402032	SCREW, 5/16-18X1 HHC SS	4
40	0402118	LKWASHER, 5/16 SS	8
41	0402121	LKWASHER, 3/8 SS	16
42	07002416	PIN, U/L LIFT CYLINDER BASE	2
43	07002417	COVER, LEFT CHAIN BOX	1
44	07002418	COVER, RIGHT CAHIN BOX	1
45	07002692	FLOOR SHEET, MID CENTER COVER	1
46	07002693	FLOOR SHEET, LEFT MID DECK	1
47	07002696	FLOOR SHEET, RIGHT MID DECK	1
48	07002697	FLOOR SHEET, LEFT REAR DECK	1
49	07002698	FLOOR SHEET, RIGHT REAR DECK	1
50	07002699	CHANNEL, VALVE COVER	1
51	07008501	PLATE, FRONT HYD COVER	1
52	0714581	PLATE, BOLTING	4
53	0721896	PLATE - SPACER	4
54	0722002	PLATE - REAR O/R COVER	2
55	0722173	PLATE - VALVE MOUNTING	2
56	0722381	ANGLE - BULKHEAD	2
57	0724476	PAD - NYLATORN - BBOM GUIDE	2
58	08003247	SUBFRAME WLMT, 1135/1140 KNEE	1
59	0807433	SWING LIMIT ANGLE WELDMENT	1
60	0910260	FRONT OUTRIGGER INSTALLATION	1
61	0910430	HOUSE LOCK ASSEMBLY - 1140	1
62	0911857	TANK ASSY	1
63	26687634	THRUST WASHER	2
64	9041010	1/4 NC X 2 1/4 HHCS GR8	6
65	9041402	1/2 NC X 1 1/4 HHCS PLT GR8	10

09003710, SUBFRAME ASSEMBLY, 1135 KNEE BOOM

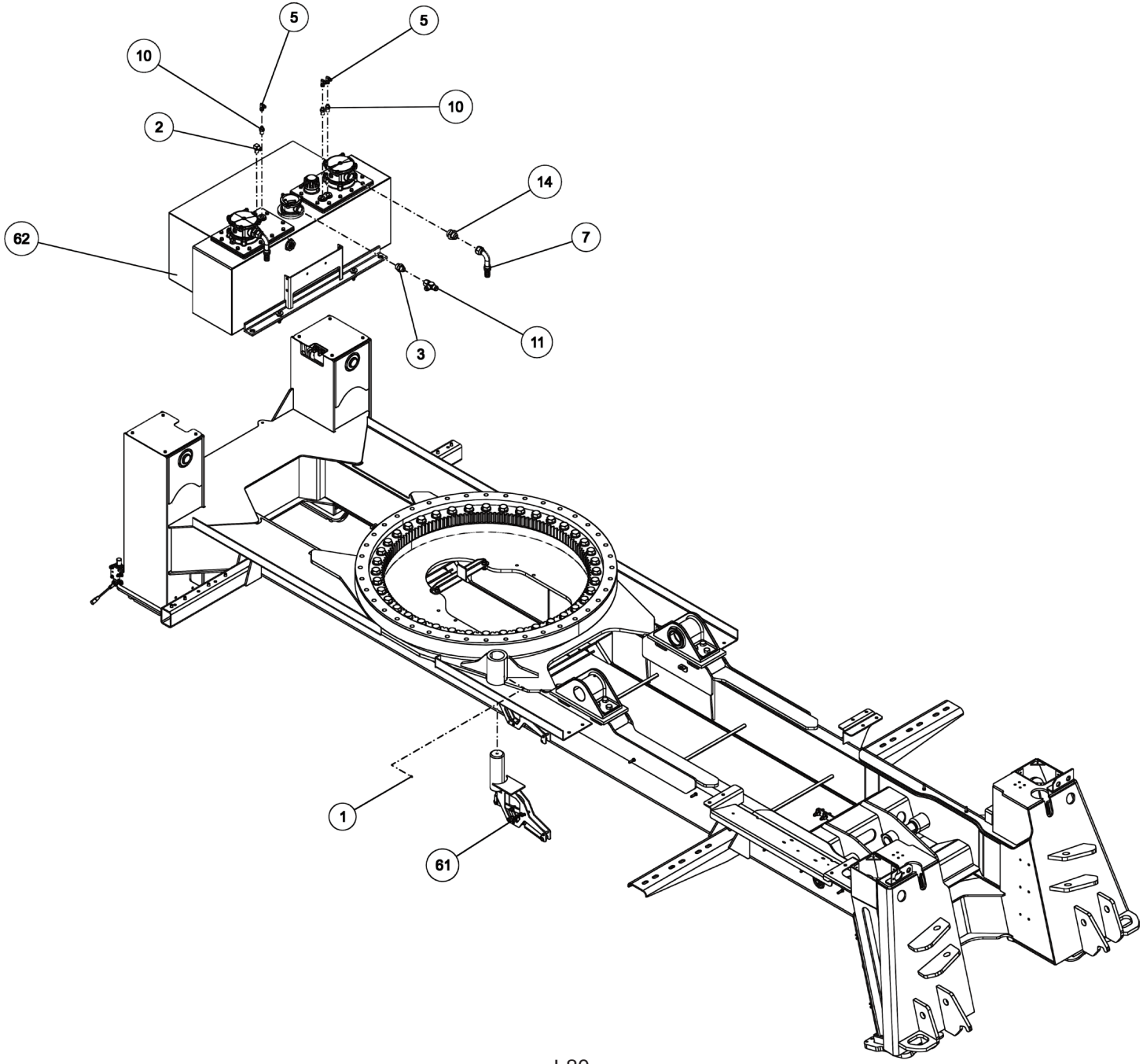

09003710, SUBFRAME ASSEMBLY, 1135 KNEE BOOM

ITEM	PART NUMBER	DESCRIPTION	QTY
	09003710	SUBFRAME ASSY, 1135 KNEE	-
1	0300113	GREASE FITTING, 1/4-28 STR	3
2	0300229	FITTING, ELB 8MJ-8MP90	1
3	0301368	ADAPTER, 16MB-12MJ	1
4	0301470	FITTING, 90ELB 6MJ-8MB90	4
5	0301696	FITTING, ELB 90 DEG 6MJ-6FJX90	4
6	0301781	FITTING, SWV NUT RUN TEE	1
7	0302170	FITTING, SWV 90 DEG BENT	2
8	0302538	BUSHING - U/L	2
9	0302575	FITTING-BULKHEAD RUN TEE	2
10	0302727	FITTING, HYD CONN	3
11	0302826	FITTING, TEE	1
12	0310397	VALVE, DIVERTER WALVOIL	2
13	0310398	HANDLE, DIVERTER VALVE	2
14	0310432	FITTING - ADAPTER 16MJ-20MB	2
15	0310480	FITTING - BULKHEAD -6 UNION	4
16	0310637	PLUG, HOLE	2
17	0312570	BEARING - ROTATOR 1130/1140	1
18	0312575	BOOM PIVOT BRKT-MACHINED	2
19	0400070	SCREW, 1/4-20X1 HHC GR5	8
20	0400109	SCREW, 5/16-18X1 HHC GR5	4
21	0400122	SCREW, 3/8-16X1-1/4 HHC GR5	6
22	0400132	SCREW, 3/8-16X1-1/2 HHC GR5	16
23	0400237	SCREW, 1/2-13X4 HHC GR5	2
24	0400286	SCREW, 3/4-10X2-3/4 HHC GR8	12
25	0400333	SCREW, 1-8X4-1/2 HHC GR8	40
26	0400367	NUT, 1/4-20 LOK	6
27	0400379	NUT, 5/16-18 SPR J	8
28	0400392	NUT, 3/8-16 LOK	6
29	0400408	NUT, 1/2-13 LOK	4
30	0400431	NUT, 3/4-10 LOK GR8	12
31	0400451	WASHER, 1/4	12
32	0400452	LKWASHER, 1/4	8

ITEM	PART NUMBER	DESCRIPTION	QTY
33	0400467	WASHER, SAE 1/2" HARDENED PL	2
34	0400480	WASHER, 3/8	6
35	0400491	LKWASHER, 1/2	10
36	0400497	WASHER, 1/2 GR8	2
37	0400522	WASHER, 1-1/16X2X1/8 TH YZ	40
38	0400980	SCREW, 3/8-16X1 FHS	12
39	0402032	SCREW, 5/16-18X1 HHC SS	4
40	0402118	LKWASHER, 5/16 SS	8
41	0402121	LKWASHER, 3/8 SS	16
42	07002416	PIN, U/L LIFT CYLINDER BASE	2
43	07002417	COVER, LEFT CHAIN BOX	1
44	07002418	COVER, RIGHT CAHIN BOX	1
45	07002692	FLOOR SHEET, MID CENTER COVER	1
46	07002693	FLOOR SHEET, LEFT MID DECK	1
47	07002696	FLOOR SHEET, RIGHT MID DECK	1
48	07002697	FLOOR SHEET, LEFT REAR DECK	1
49	07002698	FLOOR SHEET, RIGHT REAR DECK	1
50	07002699	CHANNEL, VALVE COVER	1
51	07008501	PLATE, FRONT HYD COVER	1
52	0714581	PLATE, BOLTING	4
53	0721896	PLATE - SPACER	4
54	0722002	PLATE - REAR O/R COVER	2
55	0722173	PLATE - VALVE MOUNTING	2
56	0722381	ANGLE - BULKHEAD	2
57	0724476	PAD - NYLATORN - BBOM GUIDE	2
58	08003247	SUBFRAME WLMT, 1135/1140 KNEE	1
59	0807433	SWING LIMIT ANGLE WELDMENT	1
60	0910260	FRONT OUTRIGGER INSTALLATION	1
61	0910430	HOUSE LOCK ASSEMBLY - 1140	1
62	0911857	TANK ASSY	1
63	26687634	THRUST WASHER	2
64	9041010	1/4 NC X 2 1/4 HHCS GR8	6
65	9041402	1/2 NC X 1 1/4 HHCS PLT GR8	10

09003710, SUBFRAME ASSEMBLY, 1135 KNEE BOOM

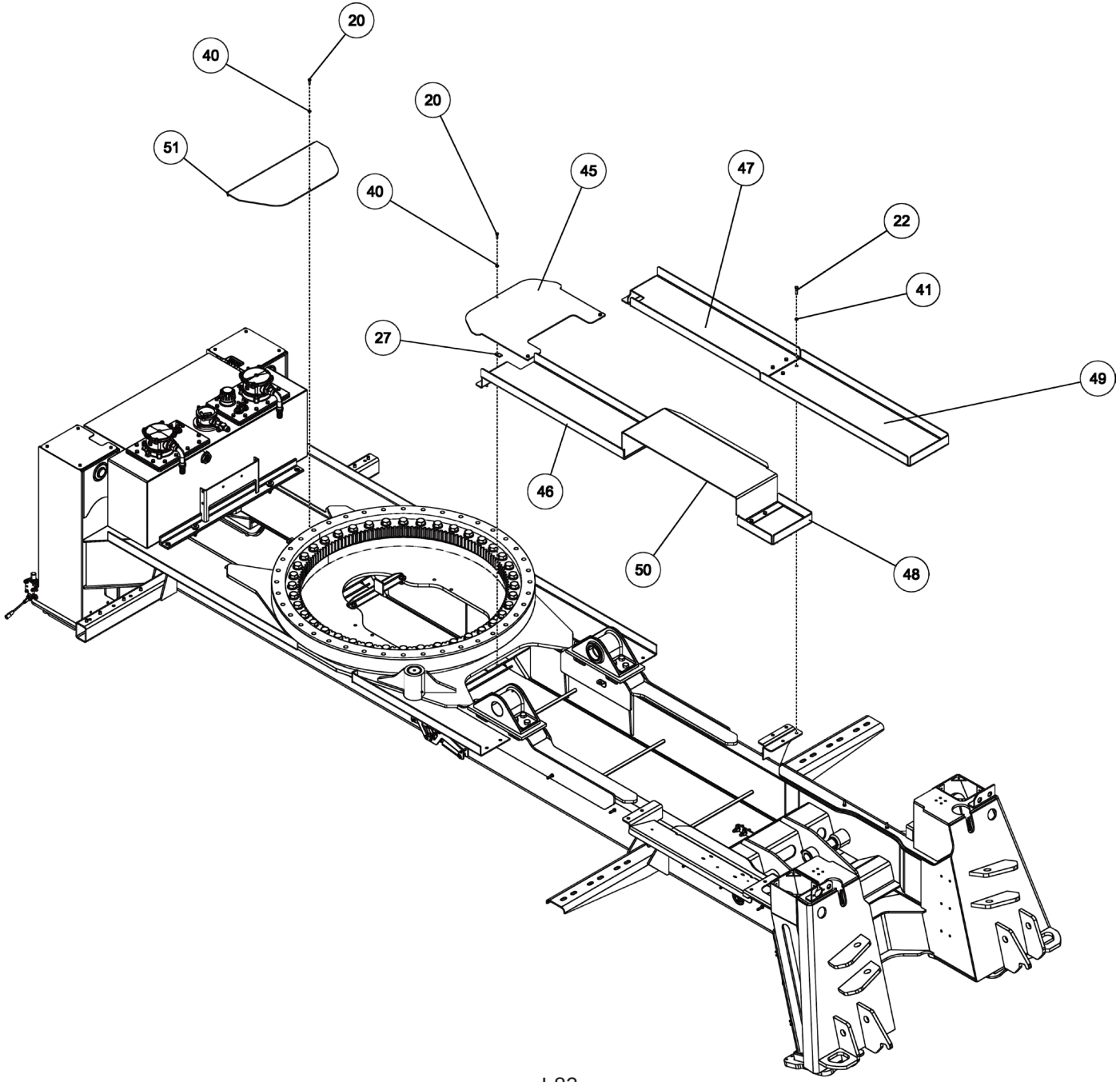

09003710, SUBFRAME ASSEMBLY, 1135 KNEE BOOM

ITEM	PART NUMBER	DESCRIPTION	QTY
	09003710	SUBFRAME ASSY, 1135 KNEE	-
1	0300113	GREASE FITTING, 1/4-28 STR	3
2	0300229	FITTING, ELB 8MJ-8MP90	1
3	0301368	ADAPTER, 16MB-12MJ	1
4	0301470	FITTING, 90ELB 6MJ-8MB90	4
5	0301696	FITTING, ELB 90 DEG 6MJ-6FJX90	4
6	0301781	FITTING, SWV NUT RUN TEE	1
7	0302170	FITTING, SWV 90 DEG BENT	2
8	0302538	BUSHING - U/L	2
9	0302575	FITTING-BULKHEAD RUN TEE	2
10	0302727	FITTING, HYD CONN	3
11	0302826	FITTING, TEE	1
12	0310397	VALVE, DIVERTER WALVOIL	2
13	0310398	HANDLE, DIVERTER VALVE	2
14	0310432	FITTING - ADAPTER 16MJ-20MB	2
15	0310480	FITTING - BULKHEAD -6 UNION	4
16	0310637	PLUG, HOLE	2
17	0312570	BEARING - ROTATOR 1130/1140	1
18	0312575	BOOM PIVOT BRKT-MACHINED	2
19	0400070	SCREW, 1/4-20X1 HHC GR5	8
20	0400109	SCREW, 5/16-18X1 HHC GR5	4
21	0400122	SCREW, 3/8-16X1-1/4 HHC GR5	6
22	0400132	SCREW, 3/8-16X1-1/2 HHC GR5	16
23	0400237	SCREW, 1/2-13X4 HHC GR5	2
24	0400286	SCREW, 3/4-10X2-3/4 HHC GR8	12
25	0400333	SCREW, 1-8X4-1/2 HHC GR8	40
26	0400367	NUT, 1/4-20 LOK	6
27	0400379	NUT, 5/16-18 SPR J	8
28	0400392	NUT, 3/8-16 LOK	6
29	0400408	NUT, 1/2-13 LOK	4
30	0400431	NUT, 3/4-10 LOK GR8	12
31	0400451	WASHER, 1/4	12
32	0400452	LKWASHER, 1/4	8

ITEM	PART NUMBER	DESCRIPTION	QTY
33	0400467	WASHER, SAE 1/2" HARDENED PL	2
34	0400480	WASHER, 3/8	6
35	0400491	LKWASHER, 1/2	10
36	0400497	WASHER, 1/2 GR8	2
37	0400522	WASHER, 1-1/16X2X1/8 TH YZ	40
38	0400980	SCREW, 3/8-16X1 FHS	12
39	0402032	SCREW, 5/16-18X1 HHC SS	4
40	0402118	LKWASHER, 5/16 SS	8
41	0402121	LKWASHER, 3/8 SS	16
42	07002416	PIN, U/L LIFT CYLINDER BASE	2
43	07002417	COVER, LEFT CHAIN BOX	1
44	07002418	COVER, RIGHT CAHIN BOX	1
45	07002692	FLOOR SHEET, MID CENTER COVER	1
46	07002693	FLOOR SHEET, LEFT MID DECK	1
47	07002696	FLOOR SHEET, RIGHT MID DECK	1
48	07002697	FLOOR SHEET, LEFT REAR DECK	1
49	07002698	FLOOR SHEET, RIGHT REAR DECK	1
50	07002699	CHANNEL, VALVE COVER	1
51	07008501	PLATE, FRONT HYD COVER	1
52	0714581	PLATE, BOLTING	4
53	0721896	PLATE - SPACER	4
54	0722002	PLATE - REAR O/R COVER	2
55	0722173	PLATE - VALVE MOUNTING	2
56	0722381	ANGLE - BULKHEAD	2
57	0724476	PAD - NYLATORN - BBOM GUIDE	2
58	08003247	SUBFRAME WLMT, 1135/1140 KNEE	1
59	0807433	SWING LIMIT ANGLE WELDMENT	1
60	0910260	FRONT OUTRIGGER INSTALLATION	1
61	0910430	HOUSE LOCK ASSEMBLY - 1140	1
62	0911857	TANK ASSY	1
63	26687634	THRUST WASHER	2
64	9041010	1/4 NC X 2 1/4 HHCS GR8	6
65	9041402	1/2 NC X 1 1/4 HHCS PLT GR8	10

09003710, SUBFRAME ASSEMBLY, 1135 KNEE BOOM

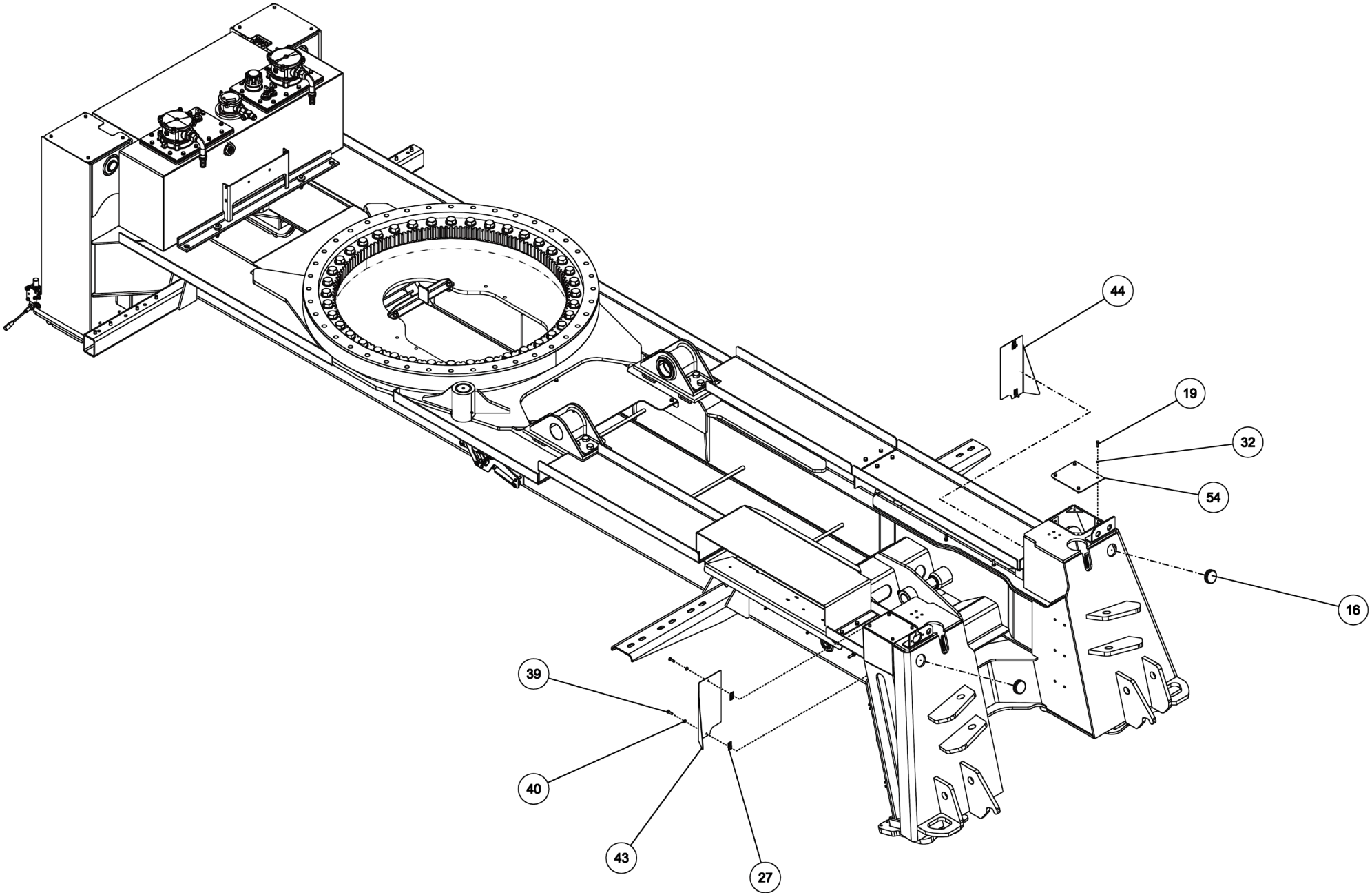

09003710, SUBFRAME ASSEMBLY, 1135 KNEE BOOM

ITEM	PART NUMBER	DESCRIPTION	QTY
	09003710	SUBFRAME ASSY, 1135 KNEE	-
1	0300113	GREASE FITTING, 1/4-28 STR	3
2	0300229	FITTING, ELB 8MJ-8MP90	1
3	0301368	ADAPTER, 16MB-12MJ	1
4	0301470	FITTING, 90ELB 6MJ-8MB90	4
5	0301696	FITTING, ELB 90 DEG 6MJ-6FJX90	4
6	0301781	FITTING, SWV NUT RUN TEE	1
7	0302170	FITTING, SWV 90 DEG BENT	2
8	0302538	BUSHING - U/L	2
9	0302575	FITTING-BULKHEAD RUN TEE	2
10	0302727	FITTING, HYD CONN	3
11	0302826	FITTING, TEE	1
12	0310397	VALVE, DIVERTER WALVOIL	2
13	0310398	HANDLE, DIVERTER VALVE	2
14	0310432	FITTING - ADAPTER 16MJ-20MB	2
15	0310480	FITTING - BULKHEAD -6 UNION	4
16	0310637	PLUG, HOLE	2
17	0312570	BEARING - ROTATOR 1130/1140	1
18	0312575	BOOM PIVOT BRKT-MACHINED	2
19	0400070	SCREW, 1/4-20X1 HHC GR5	8
20	0400109	SCREW, 5/16-18X1 HHC GR5	4
21	0400122	SCREW, 3/8-16X1-1/4 HHC GR5	6
22	0400132	SCREW, 3/8-16X1-1/2 HHC GR5	16
23	0400237	SCREW, 1/2-13X4 HHC GR5	2
24	0400286	SCREW, 3/4-10X2-3/4 HHC GR8	12
25	0400333	SCREW, 1-8X4-1/2 HHC GR8	40
26	0400367	NUT, 1/4-20 LOK	6
27	0400379	NUT, 5/16-18 SPR J	8
28	0400392	NUT, 3/8-16 LOK	6
29	0400408	NUT, 1/2-13 LOK	4
30	0400431	NUT, 3/4-10 LOK GR8	12
31	0400451	WASHER, 1/4	12
32	0400452	LKWASHER, 1/4	8

ITEM	PART NUMBER	DESCRIPTION	QTY
33	0400467	WASHER, SAE 1/2" HARDENED PL	2
34	0400480	WASHER, 3/8	6
35	0400491	LKWASHER, 1/2	10
36	0400497	WASHER, 1/2 GR8	2
37	0400522	WASHER, 1-1/16X2X1/8 TH YZ	40
38	0400980	SCREW, 3/8-16X1 FHS	12
39	0402032	SCREW, 5/16-18X1 HHC SS	4
40	0402118	LKWASHER, 5/16 SS	8
41	0402121	LKWASHER, 3/8 SS	16
42	07002416	PIN, U/L LIFT CYLINDER BASE	2
43	07002417	COVER, LEFT CHAIN BOX	1
44	07002418	COVER, RIGHT CAHIN BOX	1
45	07002692	FLOOR SHEET, MID CENTER COVER	1
46	07002693	FLOOR SHEET, LEFT MID DECK	1
47	07002696	FLOOR SHEET, RIGHT MID DECK	1
48	07002697	FLOOR SHEET, LEFT REAR DECK	1
49	07002698	FLOOR SHEET, RIGHT REAR DECK	1
50	07002699	CHANNEL, VALVE COVER	1
51	07008501	PLATE, FRONT HYD COVER	1
52	0714581	PLATE, BOLTING	4
53	0721896	PLATE - SPACER	4
54	0722002	PLATE - REAR O/R COVER	2
55	0722173	PLATE - VALVE MOUNTING	2
56	0722381	ANGLE - BULKHEAD	2
57	0724476	PAD - NYLATORN - BBOM GUIDE	2
58	08003247	SUBFRAME WLMT, 1135/1140 KNEE	1
59	0807433	SWING LIMIT ANGLE WELDMENT	1
60	0910260	FRONT OUTRIGGER INSTALLATION	1
61	0910430	HOUSE LOCK ASSEMBLY - 1140	1
62	0911857	TANK ASSY	1
63	26687634	THRUST WASHER	2
64	9041010	1/4 NC X 2 1/4 HHCS GR8	6
65	9041402	1/2 NC X 1 1/4 HHCS PLT GR8	10

09003710, SUBFRAME ASSEMBLY, 1135 KNEE BOOM

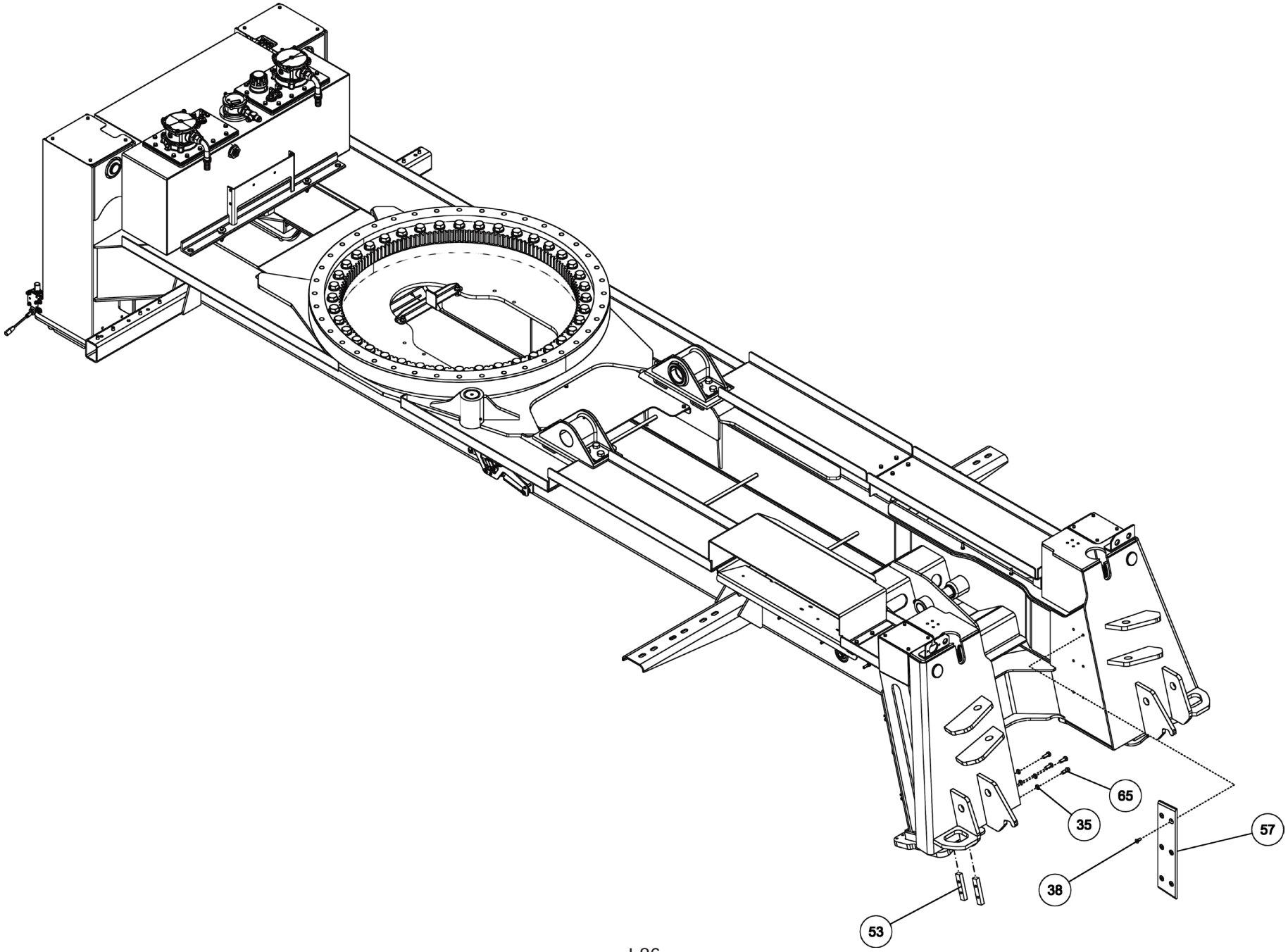

09003710, SUBFRAME ASSEMBLY, 1135 KNEE BOOM

ITEM	PART NUMBER	DESCRIPTION	QTY
	09003710	SUBFRAME ASSY, 1135 KNEE	-
1	0300113	GREASE FITTING, 1/4-28 STR	3
2	0300229	FITTING, ELB 8MJ-8MP90	1
3	0301368	ADAPTER, 16MB-12MJ	1
4	0301470	FITTING, 90ELB 6MJ-8MB90	4
5	0301696	FITTING, ELB 90 DEG 6MJ-6FJX90	4
6	0301781	FITTING, SWV NUT RUN TEE	1
7	0302170	FITTING, SWV 90 DEG BENT	2
8	0302538	BUSHING - U/L	2
9	0302575	FITTING-BULKHEAD RUN TEE	2
10	0302727	FITTING, HYD CONN	3
11	0302826	FITTING, TEE	1
12	0310397	VALVE, DIVERTER WALVOIL	2
13	0310398	HANDLE, DIVERTER VALVE	2
14	0310432	FITTING - ADAPTER 16MJ-20MB	2
15	0310480	FITTING - BULKHEAD -6 UNION	4
16	0310637	PLUG, HOLE	2
17	0312570	BEARING - ROTATOR 1130/1140	1
18	0312575	BOOM PIVOT BRKT-MACHINED	2
19	0400070	SCREW, 1/4-20X1 HHC GR5	8
20	0400109	SCREW, 5/16-18X1 HHC GR5	4
21	0400122	SCREW, 3/8-16X1-1/4 HHC GR5	6
22	0400132	SCREW, 3/8-16X1-1/2 HHC GR5	16
23	0400237	SCREW, 1/2-13X4 HHC GR5	2
24	0400286	SCREW, 3/4-10X2-3/4 HHC GR8	12
25	0400333	SCREW, 1-8X4-1/2 HHC GR8	40
26	0400367	NUT, 1/4-20 LOK	6
27	0400379	NUT, 5/16-18 SPR J	8
28	0400392	NUT, 3/8-16 LOK	6
29	0400408	NUT, 1/2-13 LOK	4
30	0400431	NUT, 3/4-10 LOK GR8	12
31	0400451	WASHER, 1/4	12
32	0400452	LKWASHER, 1/4	8

ITEM	PART NUMBER	DESCRIPTION	QTY
33	0400467	WASHER, SAE 1/2" HARDENED PL	2
34	0400480	WASHER, 3/8	6
35	0400491	LKWASHER, 1/2	10
36	0400497	WASHER, 1/2 GR8	2
37	0400522	WASHER, 1-1/16X2X1/8 TH YZ	40
38	0400980	SCREW, 3/8-16X1 FHS	12
39	0402032	SCREW, 5/16-18X1 HHC SS	4
40	0402118	LKWASHER, 5/16 SS	8
41	0402121	LKWASHER, 3/8 SS	16
42	07002416	PIN, U/L LIFT CYLINDER BASE	2
43	07002417	COVER, LEFT CHAIN BOX	1
44	07002418	COVER, RIGHT CAHIN BOX	1
45	07002692	FLOOR SHEET, MID CENTER COVER	1
46	07002693	FLOOR SHEET, LEFT MID DECK	1
47	07002696	FLOOR SHEET, RIGHT MID DECK	1
48	07002697	FLOOR SHEET, LEFT REAR DECK	1
49	07002698	FLOOR SHEET, RIGHT REAR DECK	1
50	07002699	CHANNEL, VALVE COVER	1
51	07008501	PLATE, FRONT HYD COVER	1
52	0714581	PLATE, BOLTING	4
53	0721896	PLATE - SPACER	4
54	0722002	PLATE - REAR O/R COVER	2
55	0722173	PLATE - VALVE MOUNTING	2
56	0722381	ANGLE - BULKHEAD	2
57	0724476	PAD - NYLATORN - BBOM GUIDE	2
58	08003247	SUBFRAME WLMT, 1135/1140 KNEE	1
59	0807433	SWING LIMIT ANGLE WELDMENT	1
60	0910260	FRONT OUTRIGGER INSTALLATION	1
61	0910430	HOUSE LOCK ASSEMBLY - 1140	1
62	0911857	TANK ASSY	1
63	26687634	THRUST WASHER	2
64	9041010	1/4 NC X 2 1/4 HHCS GR8	6
65	9041402	1/2 NC X 1 1/4 HHCS PLT GR8	10

0910260, FRONT OUTRIGGER INSTALLATION

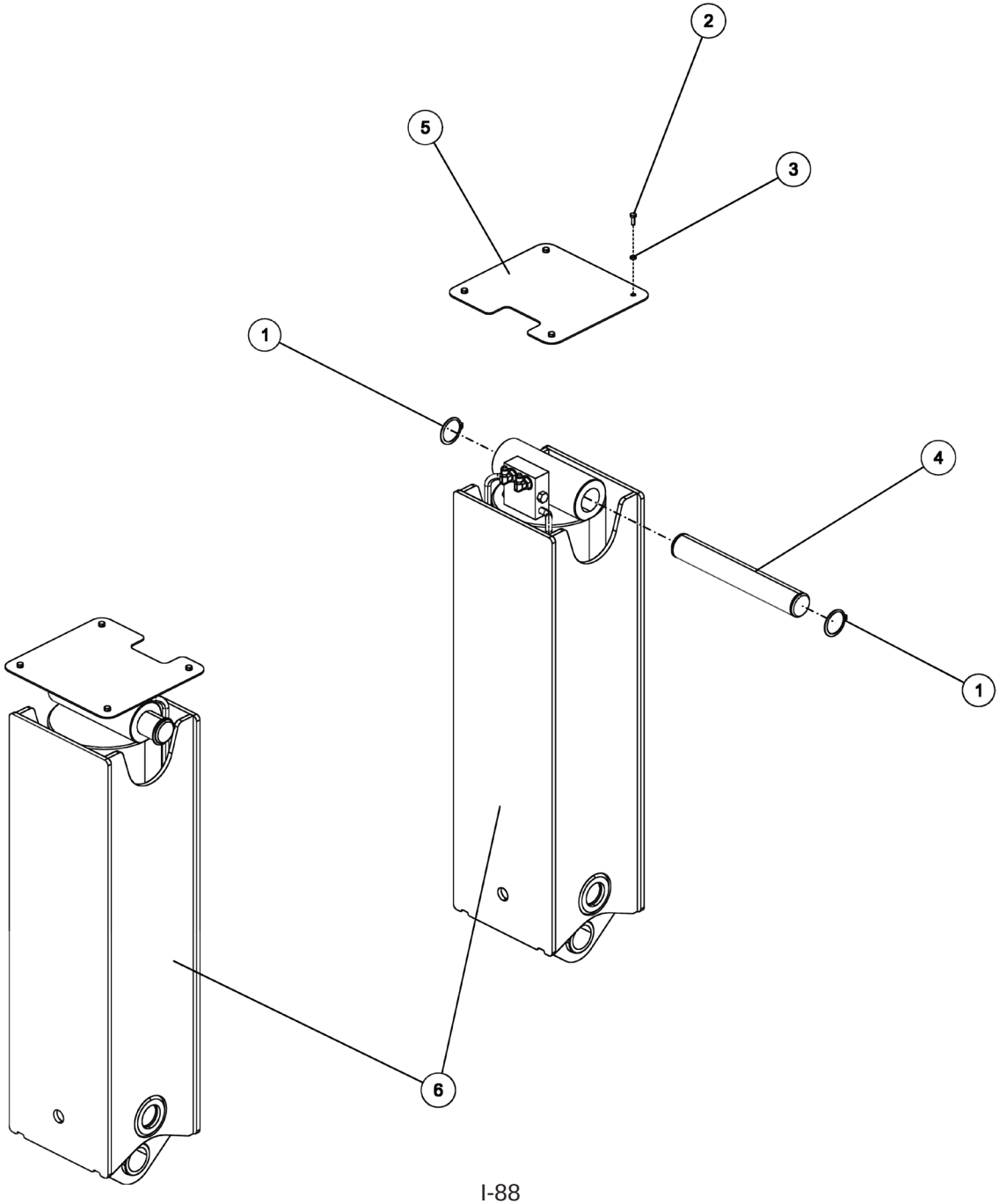

0910260, FRONT OUTRIGGER INSTALLATION

ITEM	PART NUMBER	DESCRIPTION	QTY
	0910260	FRONT OUTRIGGER INSTALLATION	-
1	0300329	SNAP RING, EXTERNAL 2	4
2	0400066	SCREW, 1/4-20X3/4 HHC GR5	8
3	0400452	LKWASHER, 1/4	8
4	0722169	PIN - O/R CYLINDER BASE	2
5	0722171	PLATE - OUTRIGGER COVER	2
6	0910575	FRONT O/R VERTICAL INNER ASSY	2

0910430, HOUSE LOCK ASSEMBLY

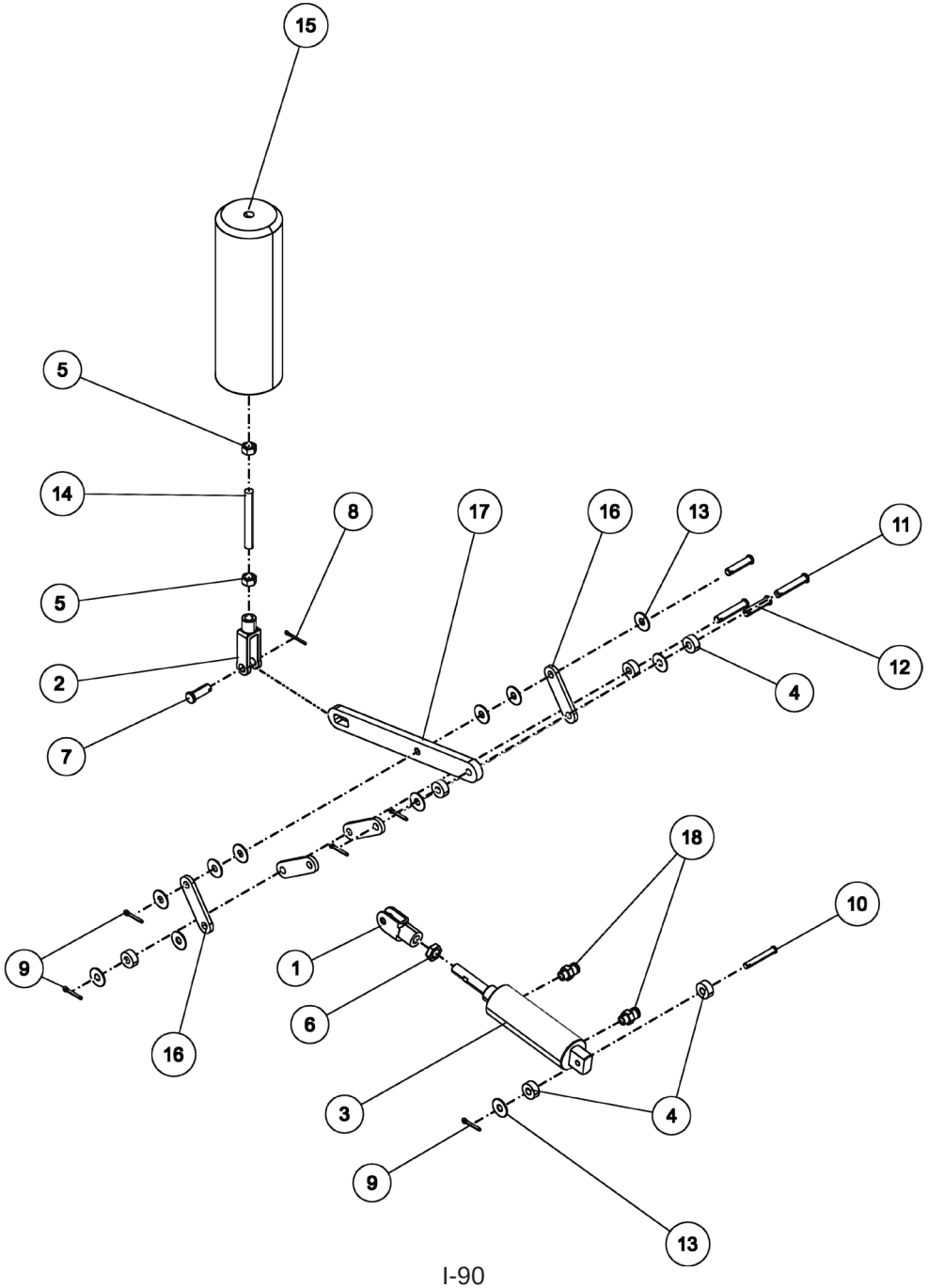

0910430, HOUSE LOCK ASSEMBLY

ITEM	PART NUMBER	DESCRIPTION	QTY
	0910430	HOUSE LOCK ASSEMBLY - 1140	-
1	0200052	CLEVIS LINK	1
2	0301577	1/4 OD PLASTIC AIRLINE, BLACK	25 FT
3	0302231	ADJ CLEVIS 3/8" AC-218	1
4	0306698	AIR CYLINDER-1.5BORE/1.71STROK	1
5	0307612	NYLON SPACER,5/16 THK X 5/16ID	6
6	0400388	NUT, 3/8-24 HEX	2
7	0400401	NUT, 7/16-20 JAM PL	1
8	0400540	PIN, 3/32X1 COT	1
9	0400543	PIN, 1/8X3/4 COT SS	5
10	0400663	PIN, 1/4X1-3/4 CLEVIS1	
11	0400664	PIN, 5/16X1-3/4 CLEVIS	2
12	0400666	PIN, 5/16X1-3/8 CLEVIS SS	2
13	0402117	WASHER, 5/16 SS	11
14	0705698	ALLTHREAD, CONNECTOR	1
15	0709331	PIN, RETAIN HOUSE LOCK	1
16	0718297	BAR LINK - PIN LOCK	4
17	0718298	BAR LEVER - PIN LOCK	1
18	9010024	FITT, BRASS CONN 1/4T-1/8MP	2

0910575, FRONT OUTRIGGER VERTICAL ASSEMBLY

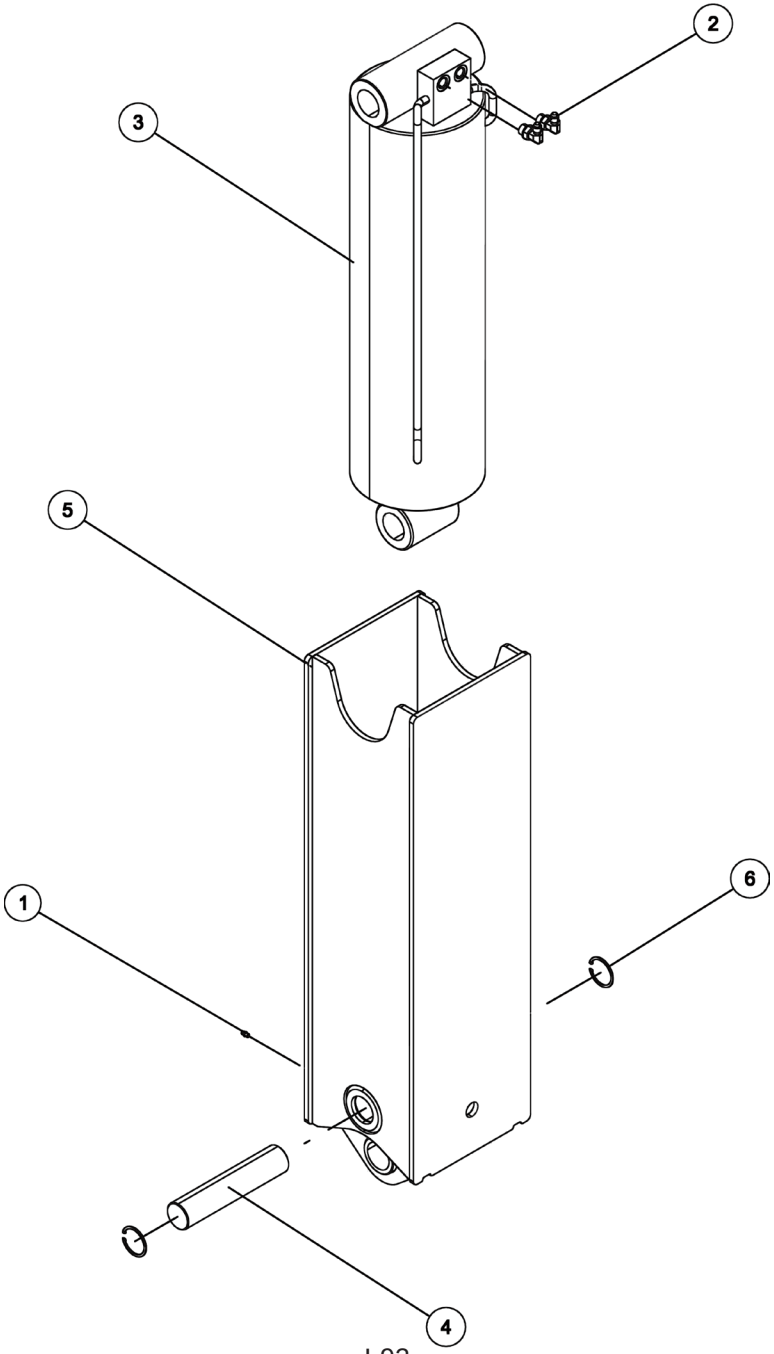

0910575, FRONT OUTRIGGER VERTICAL ASSEMBLY

ITEM	PART NUMBER	DESCRIPTION	QTY
	0910575	FRONT O/R VERTICAL INNER ASSY	-
1	0300113	GREASE FITTING, 1/4-28 STR	1
2	0301470	FITTING, 90ELB 6MJ-8MB90	2
3	0310950	CYL HYD 8 BORE 21 STROK 5K VLV	1
4	0722170	PIN - O/R CYLINDER ROD	1
5	0807449	FRONT O/R VERTICAL INNER WLMT	1
6	HD0151	SNAP RING, 2"INTERNAL	2

0911857, HYDRAULIC TANK ASSEMBLY

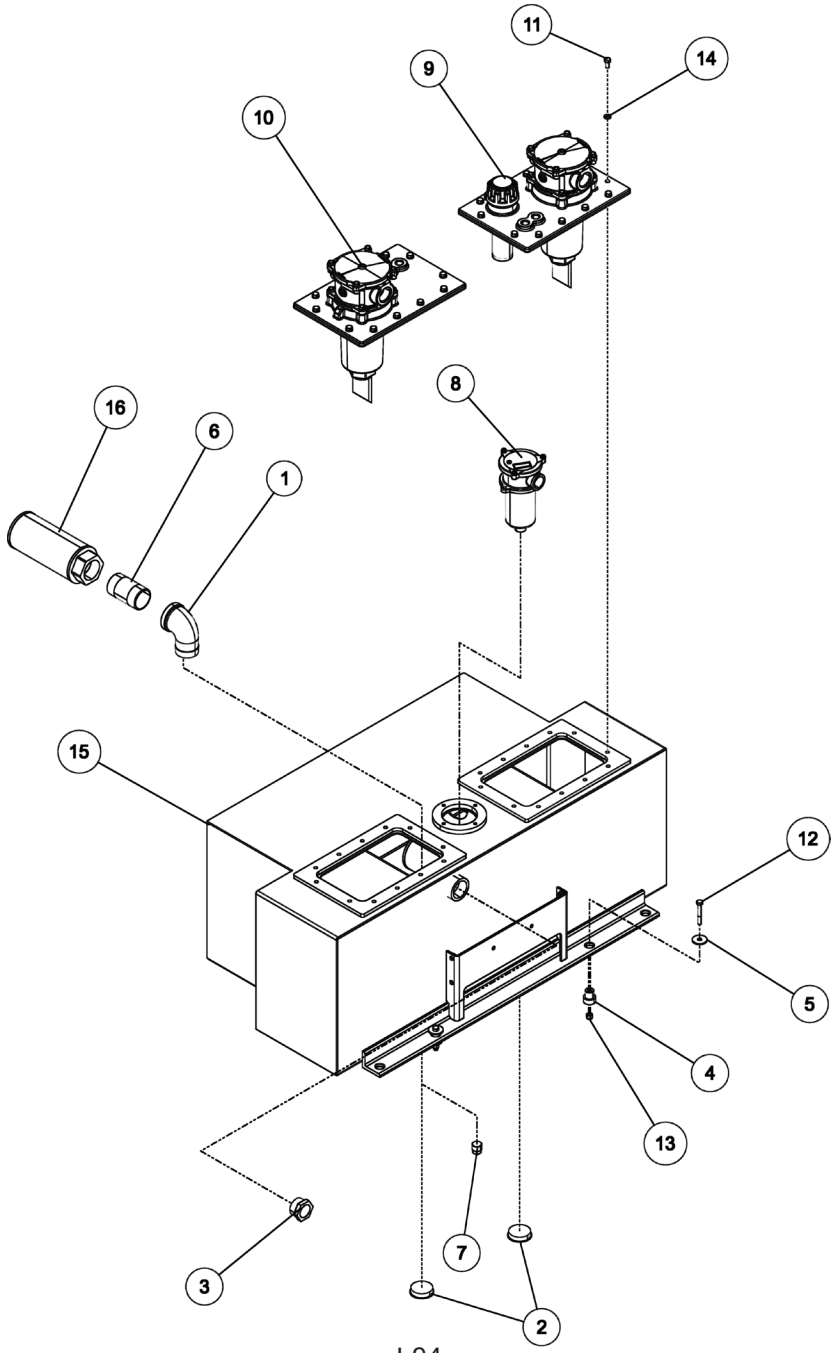

0911857, HYDRAULIC TANK ASSEMBLY

ITEM	PART NUMBER	DESCRIPTION	QTY
	0911857	TANK ASSY	-
1	0300593	FITTING, 2BL STREET	2
2	0301081	CAP PLUG PLASTIC FOR 2" ID THR	2
3	0301541	SIGHT GAGE, TYPE SVM-24	1
4	0302227	CENTER BONDED MOUNT	4
5	0302228	SPECIAL WASHER (LORD	4
6	0302367	PIPE NIPPLE - 2 X 4	2
7	0303155	PIPE PLUG 3/4 NPT MAGNETIC	1
8	0310296	FILTR HEAD ASSY W' ELEMENT	1
9	0310429	TANK COVER - FILTER & FILLER	1
10	0310430	TANK COVER & FILTER	1
11	0400121	SCREW, 3/8-16X3/4 HHC GR5	24
12	0400150	SCREW, 3/8-16X2-1/2 HHC GR5	4
13	0400392	NUT, 3/8-16 LOK	4
14	0400482	LKWASHER, 3/8	24
15	0810468	TANK WLDMT	1
16	HC0634	STRAINER/FILTER	2

09003733, WRECKER FRAME ASSEMBLY 1135

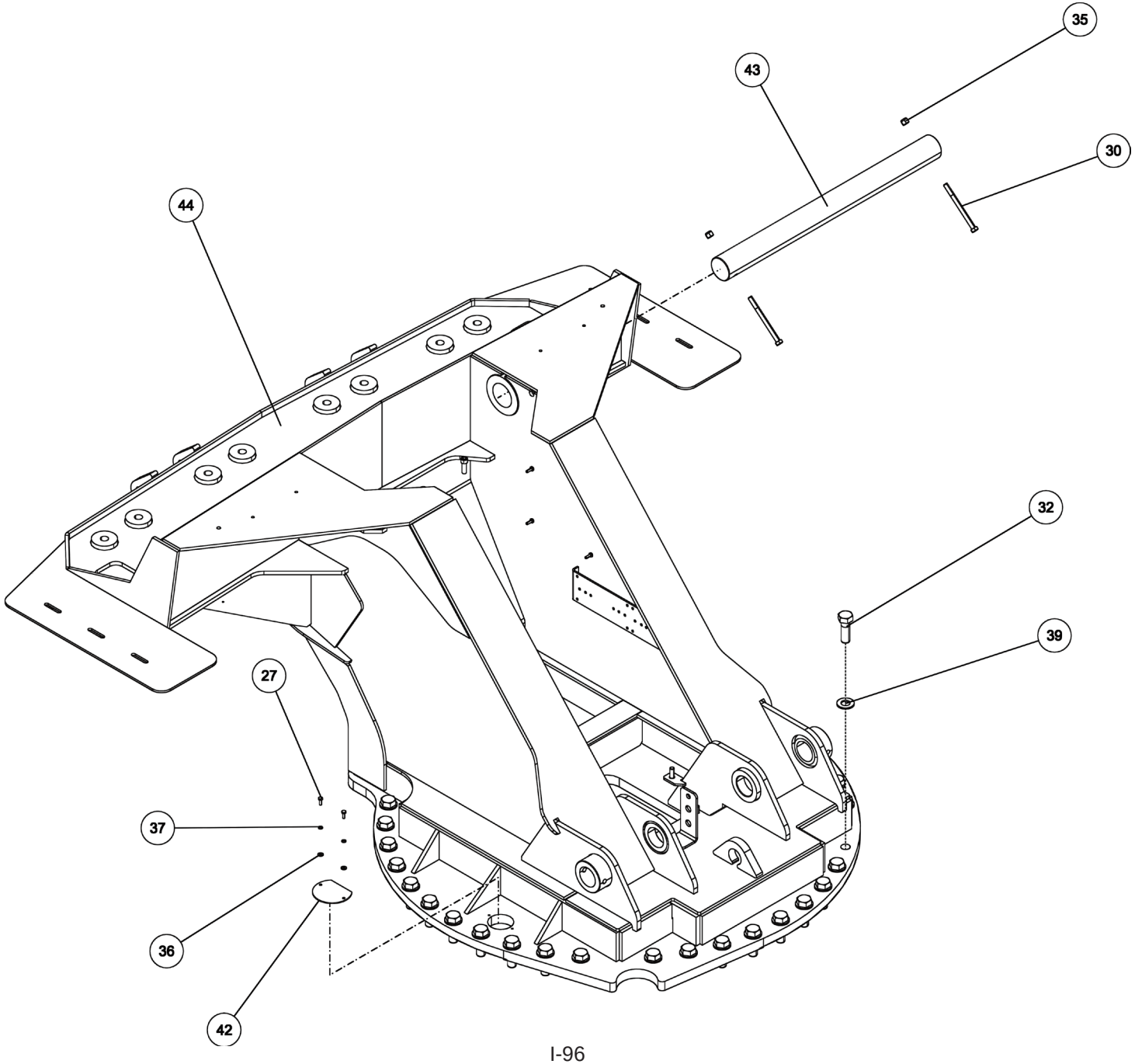

09003733, WRECKER FRAME ASSEMBLY 1135

ITEM	PART NUMBER	DESCRIPTION	QTY
	09003733	WRECKER FRAME ASSY 1135	-
1	0300041	CONNECTOR, 8MJ-8MB	4
2	0300113	GREASE FITTING, 1/4-28 STR	4
3	0300134	CLAMP, 1" HOSE INSULATED	1
4	0300644	HOSE CLAMP,8 68452/I	2
5	0300657	HOSE HYD, 46" LG	2
6	0300787	HOSE HYD, 53" LG	4
7	0301376	CONNECTOR 8 MJ - 10 MB	4
8	0301388	ELBOW, 8MJ-8MB90	4
9	0301471	HOSE, 30" 8FJK-8M3K-8FJX90	4
10	0301473	HOSE HYD, 18" LG	1
11	0301790	HOSE HYD, 15"	2
12	0302052	TEE, 8MJ-8FJX-8MJ RUN	2
13	0302275	FITTING, CONN 8MJ-6MB W/STEP	2
14	0302276	FITTING, ELB 90 DEG	4
15	0302313	HOSE HYD, 25"	4
16	0302568	HYD TUBING	2
17	0302574	FITTING-BULKHEAD RUN TEE	2
18	0302792	CYL HYD HEAVY/CHROME	2
19	0302796	FITTING, TEE	2
20	0303290	INSULATED CLAMP 2 1/2	1
21	0307106	FITT, CONNECTOR 4MB-6FB	1
22	0307107	VALVE, HOLDING 4000 PSI SAE	2
23	0307613	TUBING-HYD ASSY 1/2" DIA 9055	2
24	0310318	SWITCH - PRESSURE	1
25	0310381	ALARM, SWING (ECCO DT500)	1

ITEM	PART NUMBER	DESCRIPTION	QTY
26	0311310	VALVE-ROTATE FLOW LIMITER	1
27	0400066	SCREW, 1/4-20X3/4 HHC GR5	6
28	0400070	SCREW, 1/4-20X1 HHC GR5	8
29	0400078	SCREW, 1/4-20X2 HHC GR5	8
30	0400180	SCREW, 1/2-13X6 HHC GR5	2
31	0400206	SCREW, 1/2-13X5 HHC GR5	2
32	0400336	SCREW, 1-8X3 HHC GR8	3
33	0400367	NUT, 1/4-20 LOK	1
34	0400392	NUT, 3/8-16 LOK	2
35	0400408	NUT, 1/2-13 LOK	4
36	0400451	WASHER, 1/4	1
37	0400452	LKWASHER, 1/4	4
38	0400480	WASHER, 3/8	2
39	0400522	WASHER, 1-1/16X2X1/8 TH YZ	3
40	0703001	BRKT, MTG CHECK VALVE	2
41	0708094	PIN, LIFT CYL	2
42	0719162	PLATE, ACCESS COVER	2
43	0722103	SHAFT - BOOM PIVOT	1
44	0807639	WRECKER FRAME WELDMENT	1
45	09003732	SWING DRIVE ASSEMBLY 1135 KNEE	1
46	0910238	SWING LIMIT VALVE ASSY - 1140	1
47	0911199	HYDRAULC SWIVEL PLATE ASY 1140	1
48	0911335	12V AIR SYSTEM KIT 1130/1140	1
49	174013074	12 POSITION JUNCTION BOX	2
50	24773023	VALVE - CROSS-OVER RELIEF	1

09003733, WRECKER FRAME ASSEMBLY 1135

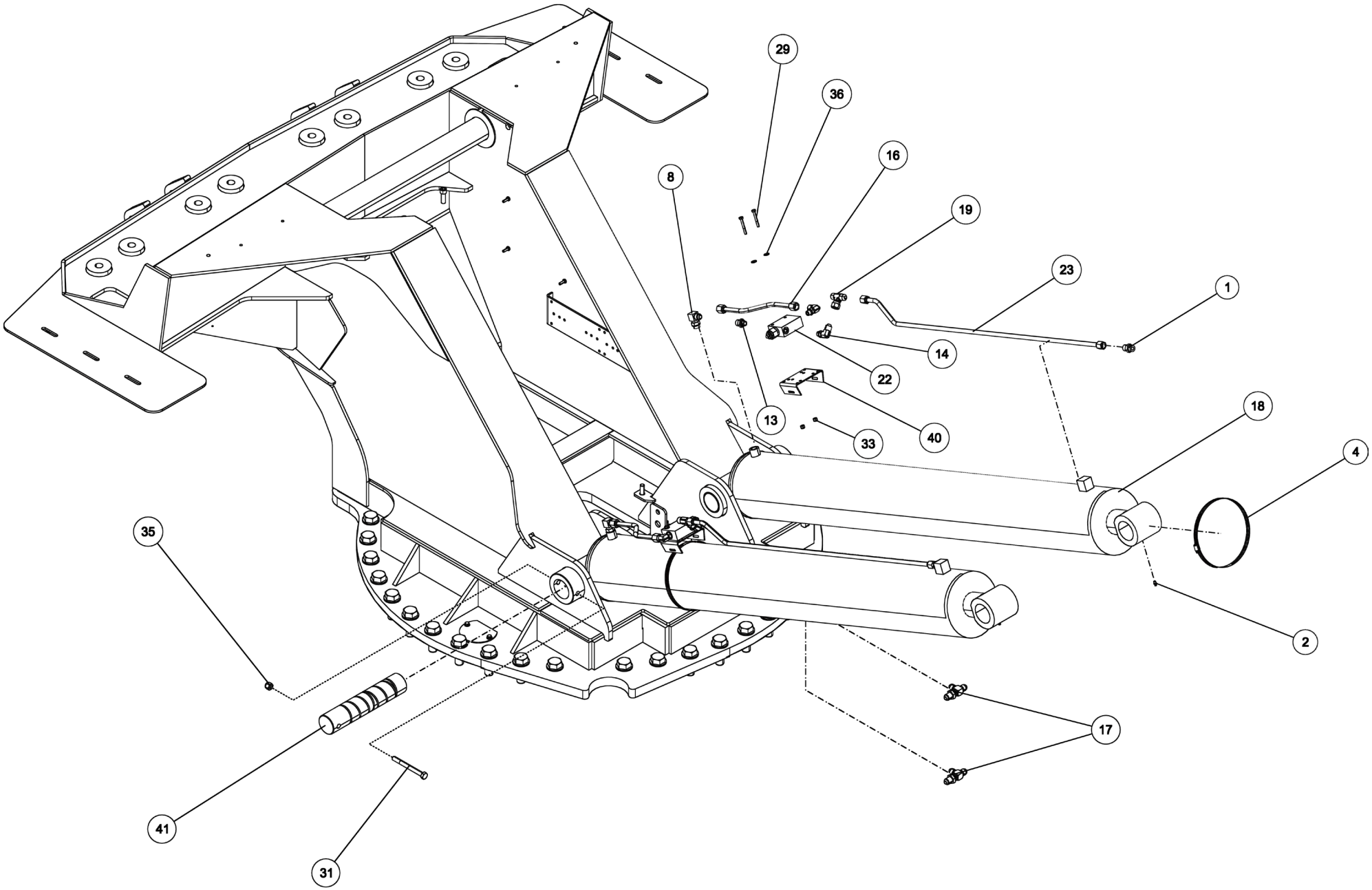

09003733, WRECKER FRAME ASSEMBLY 1135

ITEM	PART NUMBER	DESCRIPTION	QTY
	09003733	WRECKER FRAME ASSY 1135	-
1	0300041	CONNECTOR, 8MJ-8MB	4
2	0300113	GREASE FITTING, 1/4-28 STR	4
3	0300134	CLAMP, 1" HOSE INSULATED	1
4	0300644	HOSE CLAMP,8 68452/I	2
5	0300657	HOSE HYD, 46" LG	2
6	0300787	HOSE HYD, 53" LG	4
7	0301376	CONNECTOR 8 MJ - 10 MB	4
8	0301388	ELBOW, 8MJ-8MB90	4
9	0301471	HOSE, 30" 8FJK-8M3K-8FJX90	4
10	0301473	HOSE HYD, 18" LG	1
11	0301790	HOSE HYD, 15"	2
12	0302052	TEE, 8MJ-8FJX-8MJ RUN	2
13	0302275	FITTING, CONN 8MJ-6MB W/STEP	2
14	0302276	FITTING, ELB 90 DEG	4
15	0302313	HOSE HYD, 25"	4
16	0302568	HYD TUBING	2
17	0302574	FITTING-BULKHEAD RUN TEE	2
18	0302792	CYL HYD HEAVY/CHROME	2
19	0302796	FITTING, TEE	2
20	0303290	INSULATED CLAMP 2 1/2	1
21	0307106	FITT, CONNECTOR 4MB-6FB	1
22	0307107	VALVE, HOLDING 4000 PSI SAE	2
23	0307613	TUBING-HYD ASSY 1/2" DIA 9055	2
24	0310318	SWITCH - PRESSURE	1
25	0310381	ALARM, SWING (ECCO DT500)	1

ITEM	PART NUMBER	DESCRIPTION	QTY
26	0311310	VALVE-ROTATE FLOW LIMITER	1
27	0400066	SCREW, 1/4-20X3/4 HHC GR5	6
28	0400070	SCREW, 1/4-20X1 HHC GR5	8
29	0400078	SCREW, 1/4-20X2 HHC GR5	8
30	0400180	SCREW, 1/2-13X6 HHC GR5	2
31	0400206	SCREW, 1/2-13X5 HHC GR5	2
32	0400336	SCREW, 1-8X3 HHC GR8	3
33	0400367	NUT, 1/4-20 LOK	1
34	0400392	NUT, 3/8-16 LOK	2
35	0400408	NUT, 1/2-13 LOK	4
36	0400451	WASHER, 1/4	1
37	0400452	LKWASHER, 1/4	4
38	0400480	WASHER, 3/8	2
39	0400522	WASHER, 1-1/16X2X1/8 TH YZ	3
40	0703001	BRKT, MTG CHECK VALVE	2
41	0708094	PIN, LIFT CYL	2
42	0719162	PLATE, ACCESS COVER	2
43	0722103	SHAFT - BOOM PIVOT	1
44	0807639	WRECKER FRAME WELDMENT	1
45	09003732	SWING DRIVE ASSEMBLY 1135 KNEE	1
46	0910238	SWING LIMIT VALVE ASSY - 1140	1
47	0911199	HYDRAULC SWIVEL PLATE ASY 1140	1
48	0911335	12V AIR SYSTEM KIT 1130/1140	1
49	174013074	12 POSITION JUNCTION BOX	2
50	24773023	VALVE - CROSS-OVER RELIEF	1

09003733, WRECKER FRAME ASSEMBLY 1135

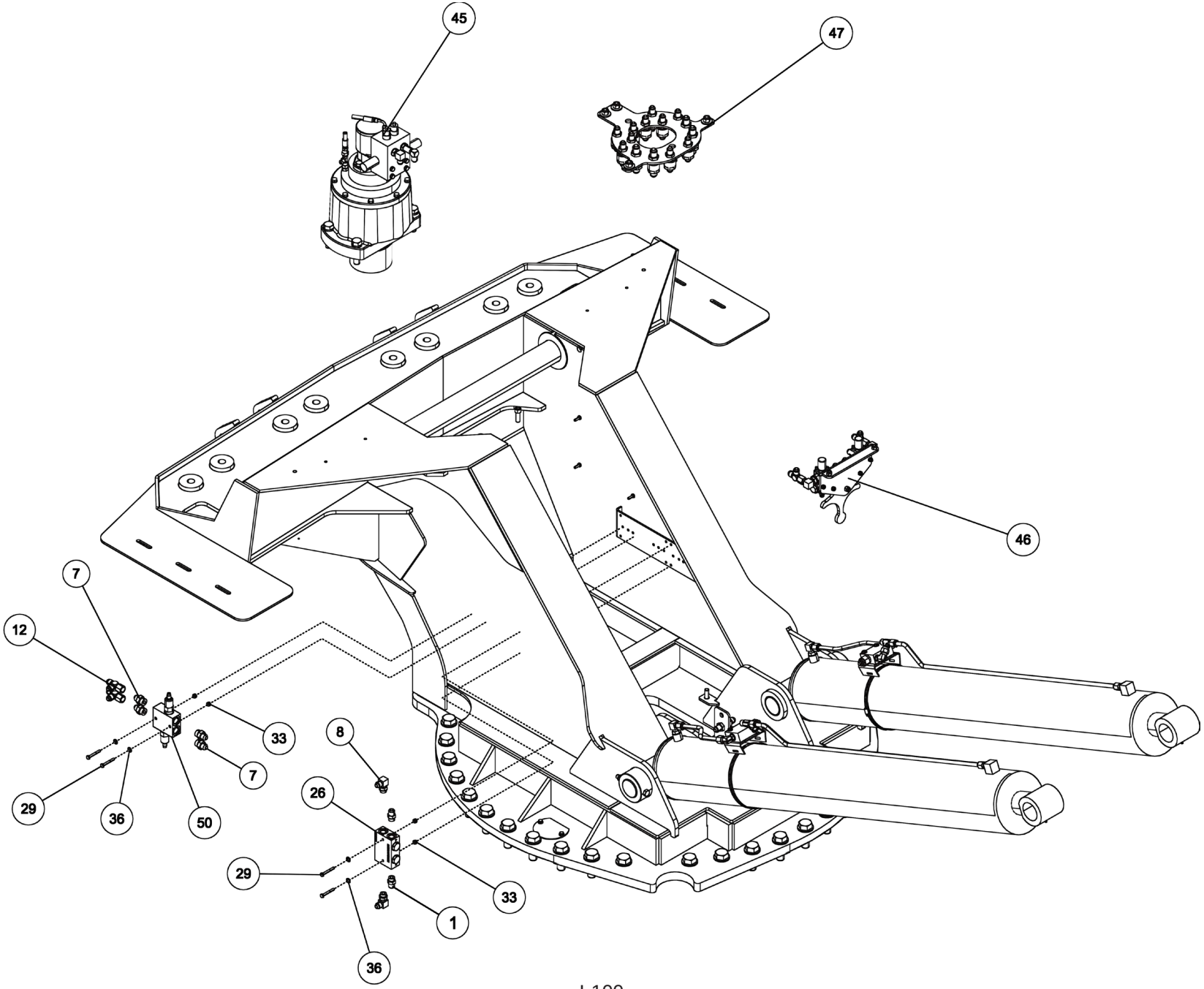

09003733, WRECKER FRAME ASSEMBLY 1135

ITEM	PART NUMBER	DESCRIPTION	QTY
	09003733	WRECKER FRAME ASSY 1135	-
1	0300041	CONNECTOR, 8MJ-8MB	4
2	0300113	GREASE FITTING, 1/4-28 STR	4
3	0300134	CLAMP, 1" HOSE INSULATED	1
4	0300644	HOSE CLAMP,8 68452/I	2
5	0300657	HOSE HYD, 46" LG	2
6	0300787	HOSE HYD, 53" LG	4
7	0301376	CONNECTOR 8 MJ - 10 MB	4
8	0301388	ELBOW, 8MJ-8MB90	4
9	0301471	HOSE, 30" 8FJK-8M3K-8FJX90	4
10	0301473	HOSE HYD, 18" LG	1
11	0301790	HOSE HYD, 15"	2
12	0302052	TEE, 8MJ-8FJX-8MJ RUN	2
13	0302275	FITTING, CONN 8MJ-6MB W/STEP	2
14	0302276	FITTING, ELB 90 DEG	4
15	0302313	HOSE HYD, 25"	4
16	0302568	HYD TUBING	2
17	0302574	FITTING-BULKHEAD RUN TEE	2
18	0302792	CYL HYD HEAVY/CHROME	2
19	0302796	FITTING, TEE	2
20	0303290	INSULATED CLAMP 2 1/2	1
21	0307106	FITT, CONNECTOR 4MB-6FB	1
22	0307107	VALVE, HOLDING 4000 PSI SAE	2
23	0307613	TUBING-HYD ASSY 1/2" DIA 9055	2
24	0310318	SWITCH - PRESSURE	1
25	0310381	ALARM, SWING (ECCO DT500)	1

ITEM	PART NUMBER	DESCRIPTION	QTY
26	0311310	VALVE-ROTATE FLOW LIMITER	1
27	0400066	SCREW, 1/4-20X3/4 HHC GR5	6
28	0400070	SCREW, 1/4-20X1 HHC GR5	8
29	0400078	SCREW, 1/4-20X2 HHC GR5	8
30	0400180	SCREW, 1/2-13X6 HHC GR5	2
31	0400206	SCREW, 1/2-13X5 HHC GR5	2
32	0400336	SCREW, 1-8X3 HHC GR8	3
33	0400367	NUT, 1/4-20 LOK	1
34	0400392	NUT, 3/8-16 LOK	2
35	0400408	NUT, 1/2-13 LOK	4
36	0400451	WASHER, 1/4	1
37	0400452	LKWASHER, 1/4	4
38	0400480	WASHER, 3/8	2
39	0400522	WASHER, 1-1/16X2X1/8 TH YZ	3
40	0703001	BRKT, MTG CHECK VALVE	2
41	0708094	PIN, LIFT CYL	2
42	0719162	PLATE, ACCESS COVER	2
43	0722103	SHAFT - BOOM PIVOT	1
44	0807639	WRECKER FRAME WELDMENT	1
45	09003732	SWING DRIVE ASSEMBLY 1135 KNEE	1
46	0910238	SWING LIMIT VALVE ASSY - 1140	1
47	0911199	HYDRAULC SWIVEL PLATE ASY 1140	1
48	0911335	12V AIR SYSTEM KIT 1130/1140	1
49	174013074	12 POSITION JUNCTION BOX	2
50	24773023	VALVE - CROSS-OVER RELIEF	1

09003733, WRECKER FRAME ASSEMBLY 1135

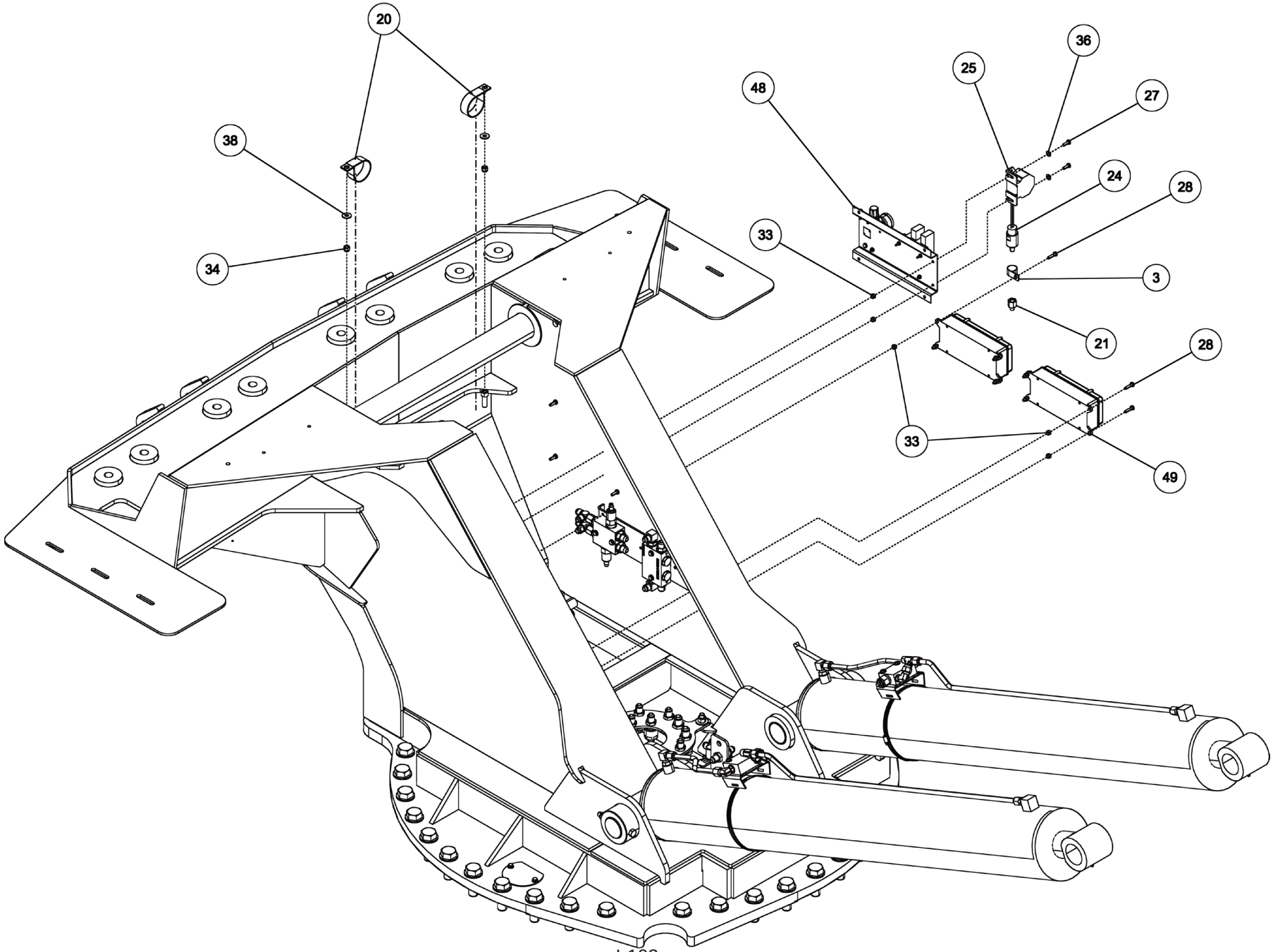

09003733, WRECKER FRAME ASSEMBLY 1135

ITEM	PART NUMBER	DESCRIPTION	QTY
	09003733	WRECKER FRAME ASSY 1135	-
1	0300041	CONNECTOR, 8MJ-8MB	4
2	0300113	GREASE FITTING, 1/4-28 STR	4
3	0300134	CLAMP, 1" HOSE INSULATED	1
4	0300644	HOSE CLAMP,8 68452/I	2
5	0300657	HOSE HYD, 46" LG	2
6	0300787	HOSE HYD, 53" LG	4
7	0301376	CONNECTOR 8 MJ - 10 MB	4
8	0301388	ELBOW, 8MJ-8MB90	4
9	0301471	HOSE, 30" 8FJK-8M3K-8FJX90	4
10	0301473	HOSE HYD, 18" LG	1
11	0301790	HOSE HYD, 15"	2
12	0302052	TEE, 8MJ-8FJX-8MJ RUN	2
13	0302275	FITTING, CONN 8MJ-6MB W/STEP	2
14	0302276	FITTING, ELB 90 DEG	4
15	0302313	HOSE HYD, 25"	4
16	0302568	HYD TUBING	2
17	0302574	FITTING-BULKHEAD RUN TEE	2
18	0302792	CYL HYD HEAVY/CHROME	2
19	0302796	FITTING, TEE	2
20	0303290	INSULATED CLAMP 2 1/2	1
21	0307106	FITT, CONNECTOR 4MB-6FB	1
22	0307107	VALVE, HOLDING 4000 PSI SAE	2
23	0307613	TUBING-HYD ASSY 1/2" DIA 9055	2
24	0310318	SWITCH - PRESSURE	1
25	0310381	ALARM, SWING (ECCO DT500)	1

ITEM	PART NUMBER	DESCRIPTION	QTY
26	0311310	VALVE-ROTATE FLOW LIMITER	1
27	0400066	SCREW, 1/4-20X3/4 HHC GR5	6
28	0400070	SCREW, 1/4-20X1 HHC GR5	8
29	0400078	SCREW, 1/4-20X2 HHC GR5	8
30	0400180	SCREW, 1/2-13X6 HHC GR5	2
31	0400206	SCREW, 1/2-13X5 HHC GR5	2
32	0400336	SCREW, 1-8X3 HHC GR8	3
33	0400367	NUT, 1/4-20 LOK	1
34	0400392	NUT, 3/8-16 LOK	2
35	0400408	NUT, 1/2-13 LOK	4
36	0400451	WASHER, 1/4	1
37	0400452	LKWASHER, 1/4	4
38	0400480	WASHER, 3/8	2
39	0400522	WASHER, 1-1/16X2X1/8 TH YZ	3
40	0703001	BRKT, MTG CHECK VALVE	2
41	0708094	PIN, LIFT CYL	2
42	0719162	PLATE, ACCESS COVER	2
43	0722103	SHAFT - BOOM PIVOT	1
44	0807639	WRECKER FRAME WELDMENT	1
45	09003732	SWING DRIVE ASSEMBLY 1135 KNEE	1
46	0910238	SWING LIMIT VALVE ASSY - 1140	1
47	0911199	HYDRAULC SWIVEL PLATE ASY 1140	1
48	0911335	12V AIR SYSTEM KIT 1130/1140	1
49	174013074	12 POSITION JUNCTION BOX	2
50	24773023	VALVE - CROSS-OVER RELIEF	1

09003733, WRECKER FRAME ASSEMBLY 1135

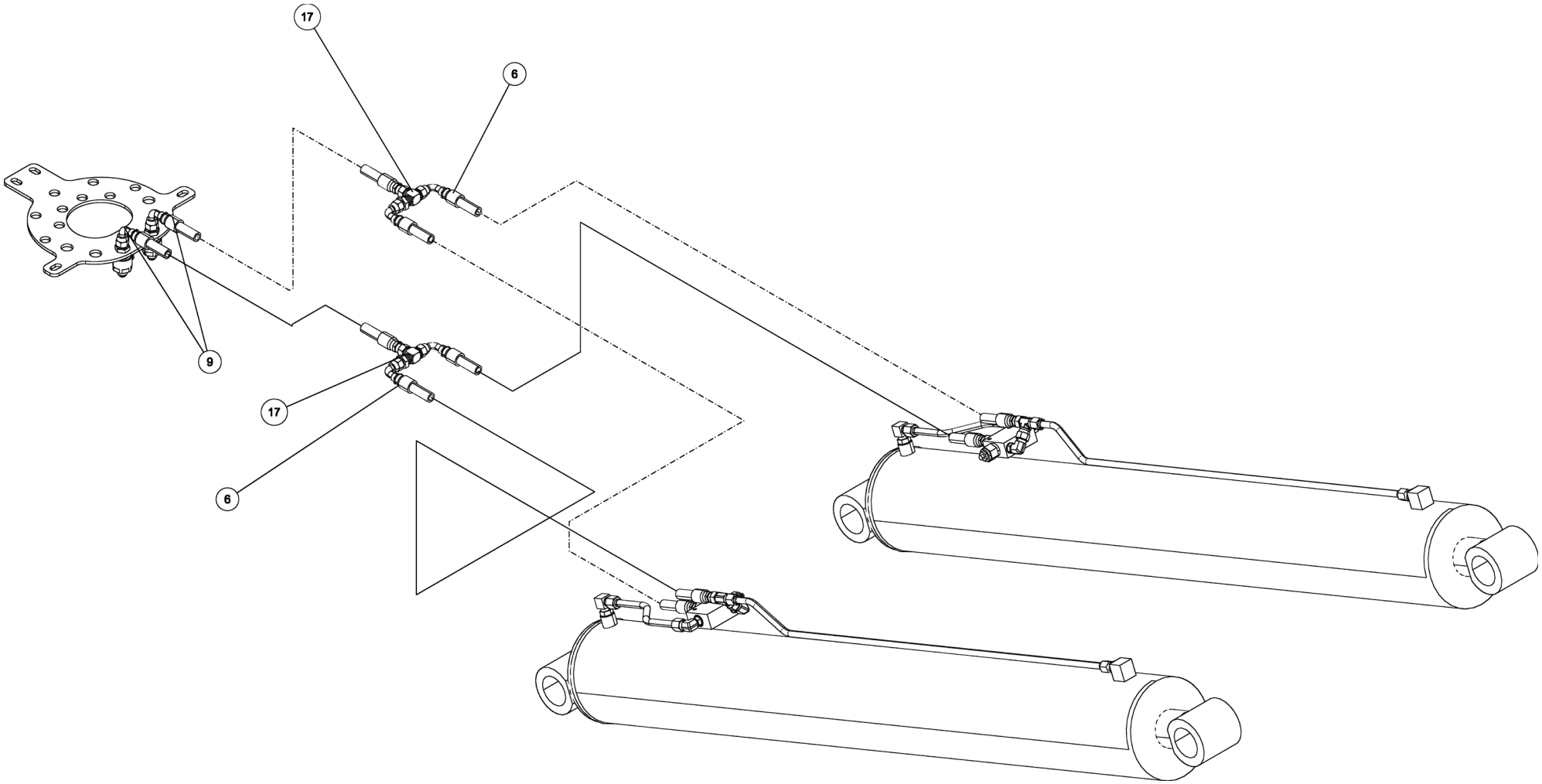

09003733, WRECKER FRAME ASSEMBLY 1135

ITEM	PART NUMBER	DESCRIPTION	QTY
	09003733	WRECKER FRAME ASSY 1135	-
1	0300041	CONNECTOR, 8MJ-8MB	4
2	0300113	GREASE FITTING, 1/4-28 STR	4
3	0300134	CLAMP, 1" HOSE INSULATED	1
4	0300644	HOSE CLAMP,8 68452/I	2
5	0300657	HOSE HYD, 46" LG	2
6	0300787	HOSE HYD, 53" LG	4
7	0301376	CONNECTOR 8 MJ - 10 MB	4
8	0301388	ELBOW, 8MJ-8MB90	4
9	0301471	HOSE, 30" 8FJK-8M3K-8FJX90	4
10	0301473	HOSE HYD, 18" LG	1
11	0301790	HOSE HYD, 15"	2
12	0302052	TEE, 8MJ-8FJX-8MJ RUN	2
13	0302275	FITTING, CONN 8MJ-6MB W/STEP	2
14	0302276	FITTING, ELB 90 DEG	4
15	0302313	HOSE HYD, 25"	4
16	0302568	HYD TUBING	2
17	0302574	FITTING-BULKHEAD RUN TEE	2
18	0302792	CYL HYD HEAVY/CHROME	2
19	0302796	FITTING, TEE	2
20	0303290	INSULATED CLAMP 2 1/2	1
21	0307106	FITT, CONNECTOR 4MB-6FB	1
22	0307107	VALVE, HOLDING 4000 PSI SAE	2
23	0307613	TUBING-HYD ASSY 1/2" DIA 9055	2
24	0310318	SWITCH - PRESSURE	1
25	0310381	ALARM, SWING (ECCO DT500)	1

ITEM	PART NUMBER	DESCRIPTION	QTY
26	0311310	VALVE-ROTATE FLOW LIMITER	1
27	0400066	SCREW, 1/4-20X3/4 HHC GR5	6
28	0400070	SCREW, 1/4-20X1 HHC GR5	8
29	0400078	SCREW, 1/4-20X2 HHC GR5	8
30	0400180	SCREW, 1/2-13X6 HHC GR5	2
31	0400206	SCREW, 1/2-13X5 HHC GR5	2
32	0400336	SCREW, 1-8X3 HHC GR8	3
33	0400367	NUT, 1/4-20 LOK	1
34	0400392	NUT, 3/8-16 LOK	2
35	0400408	NUT, 1/2-13 LOK	4
36	0400451	WASHER, 1/4	1
37	0400452	LKWASHER, 1/4	4
38	0400480	WASHER, 3/8	2
39	0400522	WASHER, 1-1/16X2X1/8 TH YZ	3
40	0703001	BRKT, MTG CHECK VALVE	2
41	0708094	PIN, LIFT CYL	2
42	0719162	PLATE, ACCESS COVER	2
43	0722103	SHAFT - BOOM PIVOT	1
44	0807639	WRECKER FRAME WELDMENT	1
45	09003732	SWING DRIVE ASSEMBLY 1135 KNEE	1
46	0910238	SWING LIMIT VALVE ASSY - 1140	1
47	0911199	HYDRAULC SWIVEL PLATE ASY 1140	1
48	0911335	12V AIR SYSTEM KIT 1130/1140	1
49	174013074	12 POSITION JUNCTION BOX	2
50	24773023	VALVE - CROSS-OVER RELIEF	1

09003733, WRECKER FRAME ASSEMBLY 1135

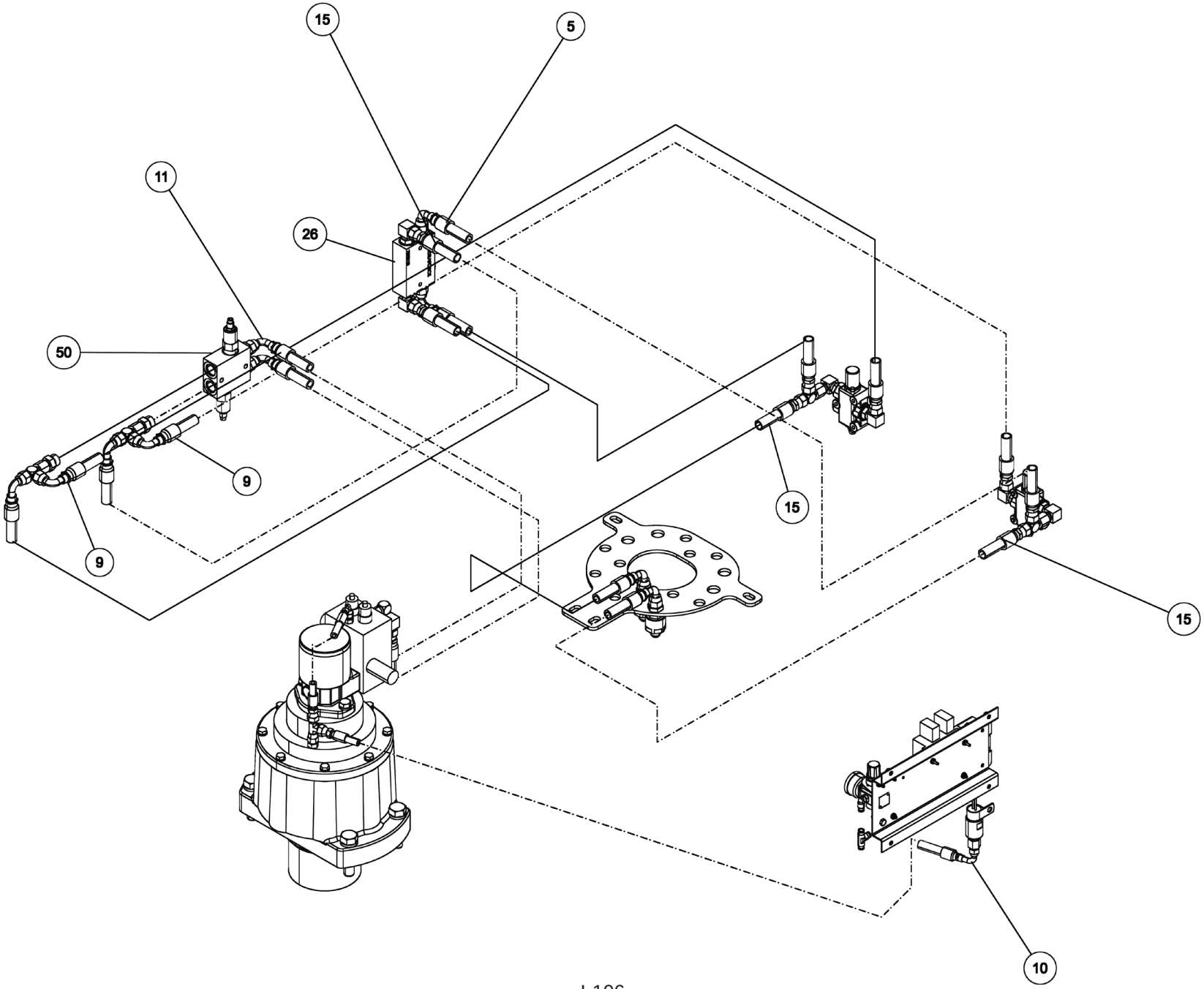

09003733, WRECKER FRAME ASSEMBLY 1135

ITEM	PART NUMBER	DESCRIPTION	QTY
	09003733	WRECKER FRAME ASSY 1135	-
1	0300041	CONNECTOR, 8MJ-8MB	4
2	0300113	GREASE FITTING, 1/4-28 STR	4
3	0300134	CLAMP, 1" HOSE INSULATED	1
4	0300644	HOSE CLAMP,8 68452/I	2
5	0300657	HOSE HYD, 46" LG	2
6	0300787	HOSE HYD, 53" LG	4
7	0301376	CONNECTOR 8 MJ - 10 MB	4
8	0301388	ELBOW, 8MJ-8MB90	4
9	0301471	HOSE, 30" 8FJK-8M3K-8FJX90	4
10	0301473	HOSE HYD, 18" LG	1
11	0301790	HOSE HYD, 15"	2
12	0302052	TEE, 8MJ-8FJX-8MJ RUN	2
13	0302275	FITTING, CONN 8MJ-6MB W/STEP	2
14	0302276	FITTING, ELB 90 DEG	4
15	0302313	HOSE HYD, 25"	4
16	0302568	HYD TUBING	2
17	0302574	FITTING-BULKHEAD RUN TEE	2
18	0302792	CYL HYD HEAVY/CHROME	2
19	0302796	FITTING, TEE	2
20	0303290	INSULATED CLAMP 2 1/2	1
21	0307106	FITT, CONNECTOR 4MB-6FB	1
22	0307107	VALVE, HOLDING 4000 PSI SAE	2
23	0307613	TUBING-HYD ASSY 1/2" DIA 9055	2
24	0310318	SWITCH - PRESSURE	1
25	0310381	ALARM, SWING (ECCO DT500)	1

ITEM	PART NUMBER	DESCRIPTION	QTY
26	0311310	VALVE-ROTATE FLOW LIMITER	1
27	0400066	SCREW, 1/4-20X3/4 HHC GR5	6
28	0400070	SCREW, 1/4-20X1 HHC GR5	8
29	0400078	SCREW, 1/4-20X2 HHC GR5	8
30	0400180	SCREW, 1/2-13X6 HHC GR5	2
31	0400206	SCREW, 1/2-13X5 HHC GR5	2
32	0400336	SCREW, 1-8X3 HHC GR8	3
33	0400367	NUT, 1/4-20 LOK	1
34	0400392	NUT, 3/8-16 LOK	2
35	0400408	NUT, 1/2-13 LOK	4
36	0400451	WASHER, 1/4	1
37	0400452	LKWASHER, 1/4	4
38	0400480	WASHER, 3/8	2
39	0400522	WASHER, 1-1/16X2X1/8 TH YZ	3
40	0703001	BRKT, MTG CHECK VALVE	2
41	0708094	PIN, LIFT CYL	2
42	0719162	PLATE, ACCESS COVER	2
43	0722103	SHAFT - BOOM PIVOT	1
44	0807639	WRECKER FRAME WELDMENT	1
45	09003732	SWING DRIVE ASSEMBLY 1135 KNEE	1
46	0910238	SWING LIMIT VALVE ASSY - 1140	1
47	0911199	HYDRAULC SWIVEL PLATE ASY 1140	1
48	0911335	12V AIR SYSTEM KIT 1130/1140	1
49	174013074	12 POSITION JUNCTION BOX	2
50	24773023	VALVE - CROSS-OVER RELIEF	1

0910238, SWING LIMIT VALVE ASSEMBLY

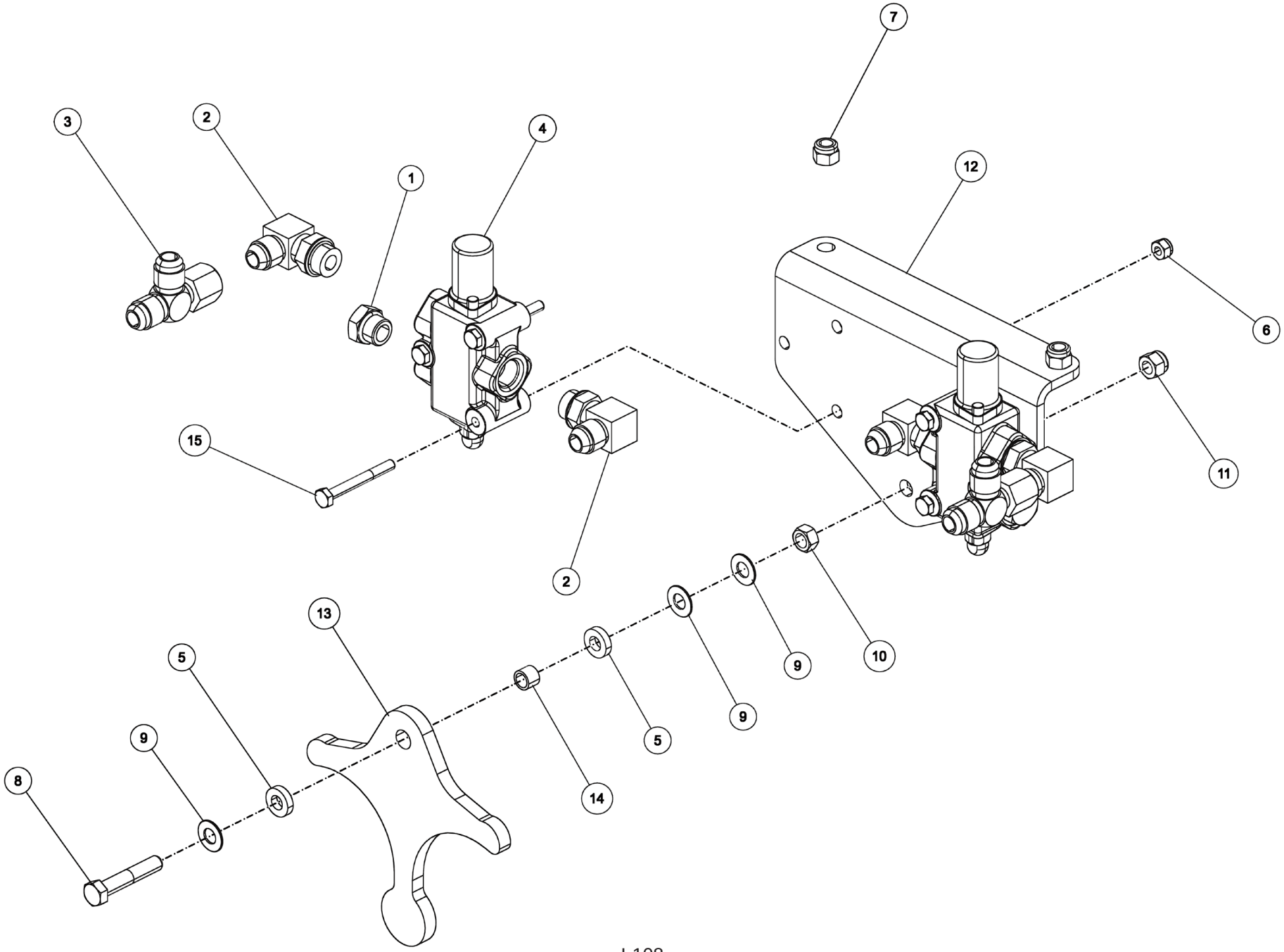

0910238, SWING LIMIT VALVE ASSEMBLY

ITEM	PART NUMBER	DESCRIPTION	QTY
	0910238	SWING LIMIT VALVE ASSY - 1140	-
1	0300387	PLUG, 8MB	2
2	0301388	ELBOW, 8MJ-8MB90	4
3	0302052	TEE, 8MJ-8FJX-8MJ RUN	2
4	0310336	VALVE, DIVERTER	2
5	0310565	SPACER, 3/8ID X 3/4OD X 3/16	2
6	0400367	NUT, 1/4-20 LOK	6
7	0400392	NUT, 3/8-16 LOK	2
8	0402046	SCREW, 3/8-16X2 HHC SS	1
9	0402120	WASHER, 3/8 SS	3
10	0402122	NUT, 3/8-16 HEX SS	1
11	0402123	NUT, 3/8-16 LOK SS	1
12	07000402	ANGLE - SWING LIMIT MOUNTING	1
13	0721687	PLATE - SWING LIMIT CAM	1
14	561-0380002	BEARING, BRONZE 3/8 IDx1/2 OD	1
15	9041010	1/4 NC X 2 1/4 HHCS GR8	6

0911199, HYDRAULIC SWIVEL PLATE ASSEMBLY

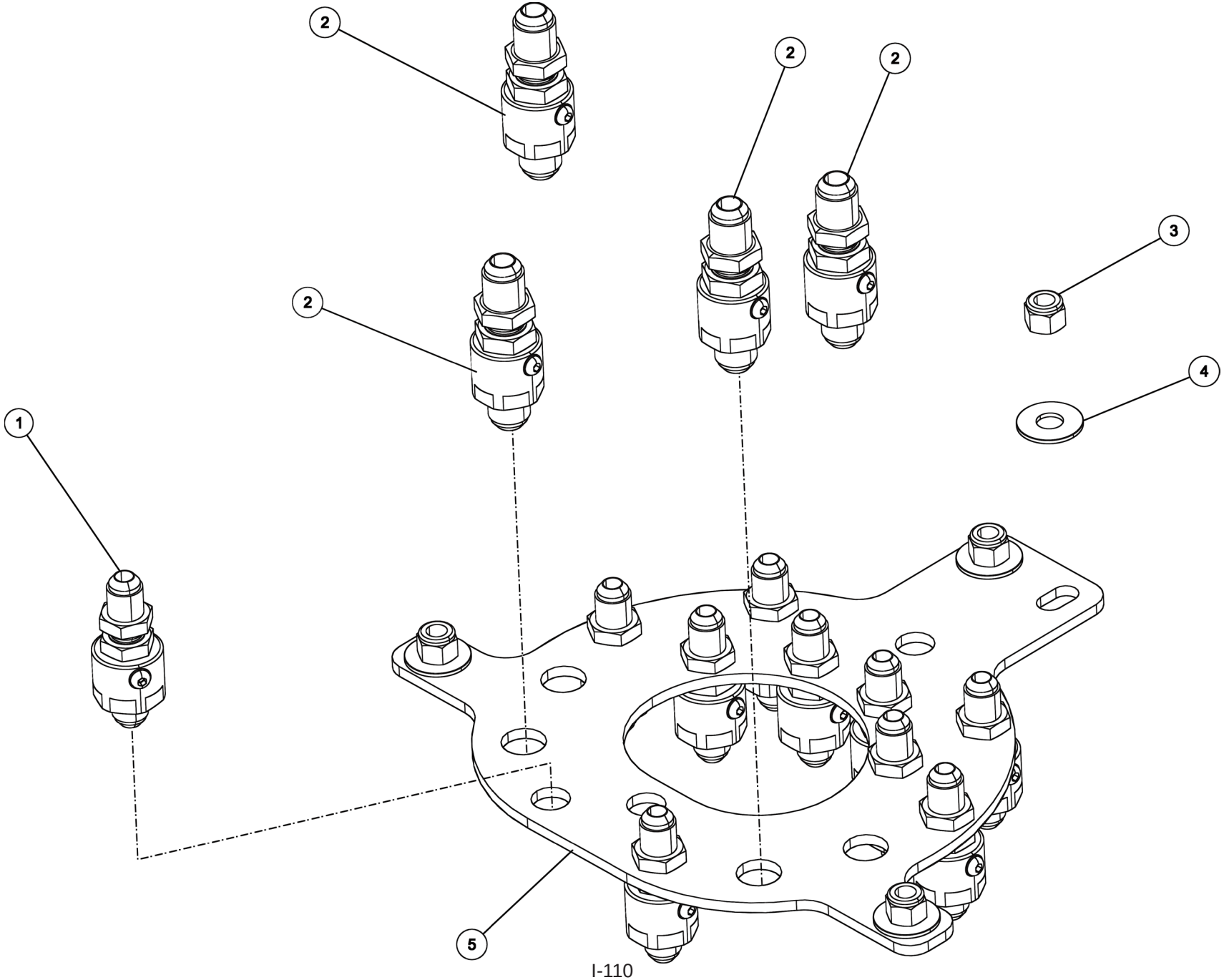

0911199, HYDRAULIC SWIVEL PLATE ASSEMBLY

ITEM	PART NUMBER	DESCRIPTION	QTY
	0911199	HYDRAULC SWIVEL PLATE ASY 1140	-
1	0301471	HOSE, 30" 8FJK-8M3K-8FJX90	3
2	0302313	HOSE HYD, 25"	5
3	0310371	SWIVEL, INLINE - 8MJ BULKHEAD	10
4	0310372	SWIVEL, INLINE - 10MJ BULKHEAD	4
5	0400408	NUT, 1/2-13 LOK	4
6	0400492	WASHER, 1/2	4
7	0724503	PLATE-HYD SWIVEL MTG	1

0911335, 12V AIR SYSTEM ASSEMBLY

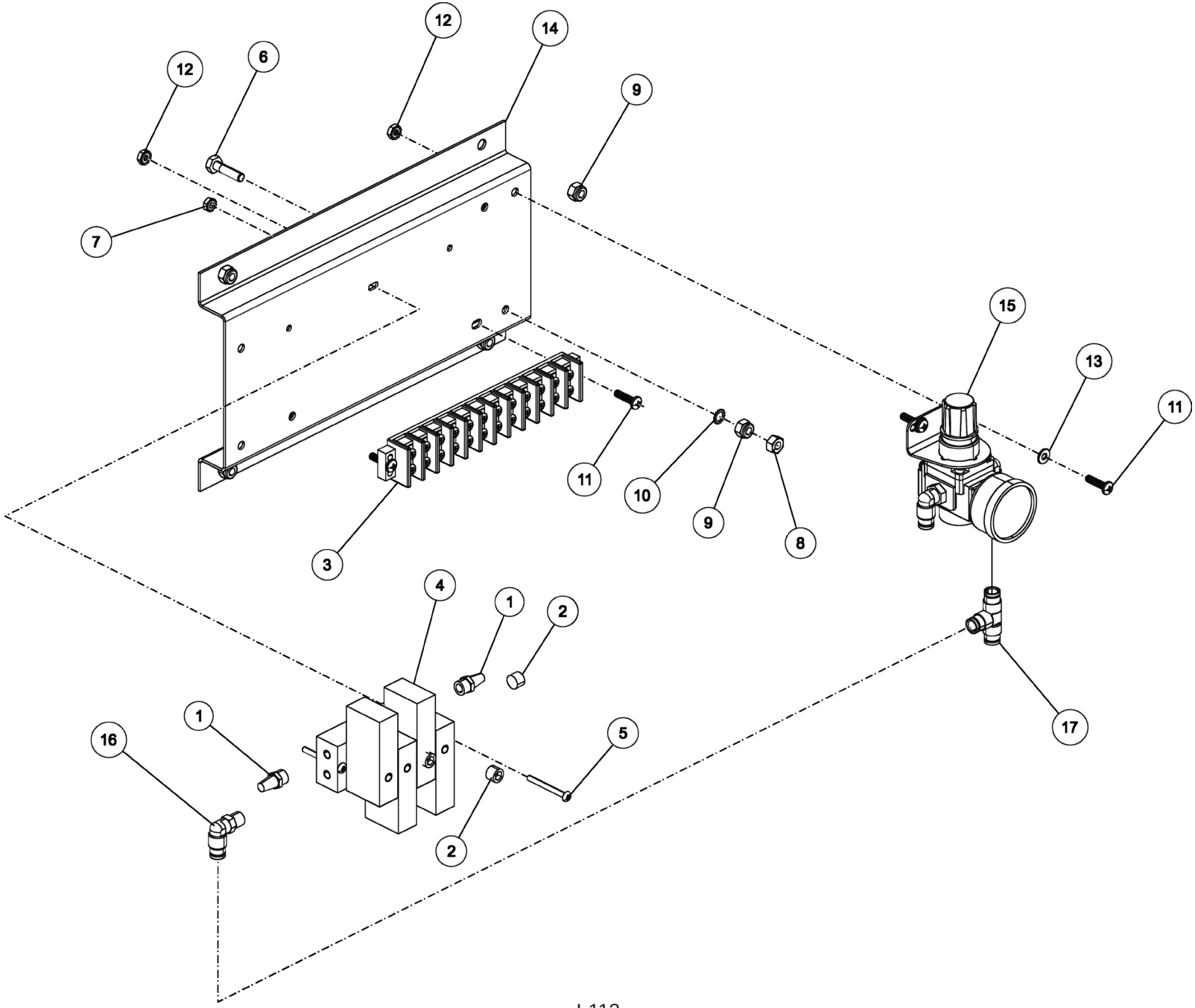

0911335, 12V AIR SYSTEM ASSEMBLY

ITEM	PART NUMBER	DESCRIPTION	QTY
	0911335	12V AIR SYSTEM KIT 1130/1140	-
1	0301577	1/4 OD PLASTIC AIRLINE, BLACK	5
2	0302495	CONVOLUTED LOOM 1/4	5
3	0302677	BREATHER VENT 1/8 MP	2
4	0306977	FITTING BRASS PLUG 1/8	3
5	0306978	TERMINAL BLOCK W/SCREW	1
6	0310192	AIR SOL STK 12VDC 4 BANK	1
7	0400009	SCREW, 8-32X1-1/2 PRH SS	2
8	0400070	SCREW, 1/4-20X1 HHC GR5	1
9	0400351	NUT, 8-32 HEX	2
10	0400366	NUT, 1/4-20 HEX	1
11	0400367	NUT, 1/4-20 LOK	5
12	0400458	LKWASHER, 1/4 EXT	1
13	0400687	SCREW, 10-24X3/4 PRH SS	4
14	0400752	NUT, 10-24 LOK EXT	4
15	0400816	WASHER, M10 SS	2
16	0711277	SUPPORT, SOLENOID VALVE	1
17	0911804	AIR REGULATOR-GAUGE ASSEMBLY	1
18	9010030	FITT, BRASS ELBOW 1/4T-1/8MPX	1
19	9011071	FITT, BRASS TEE 1/4T-1/4T-1/4T	1

0911804, AIR REGULATOR-GAUGE ASSEMBLY

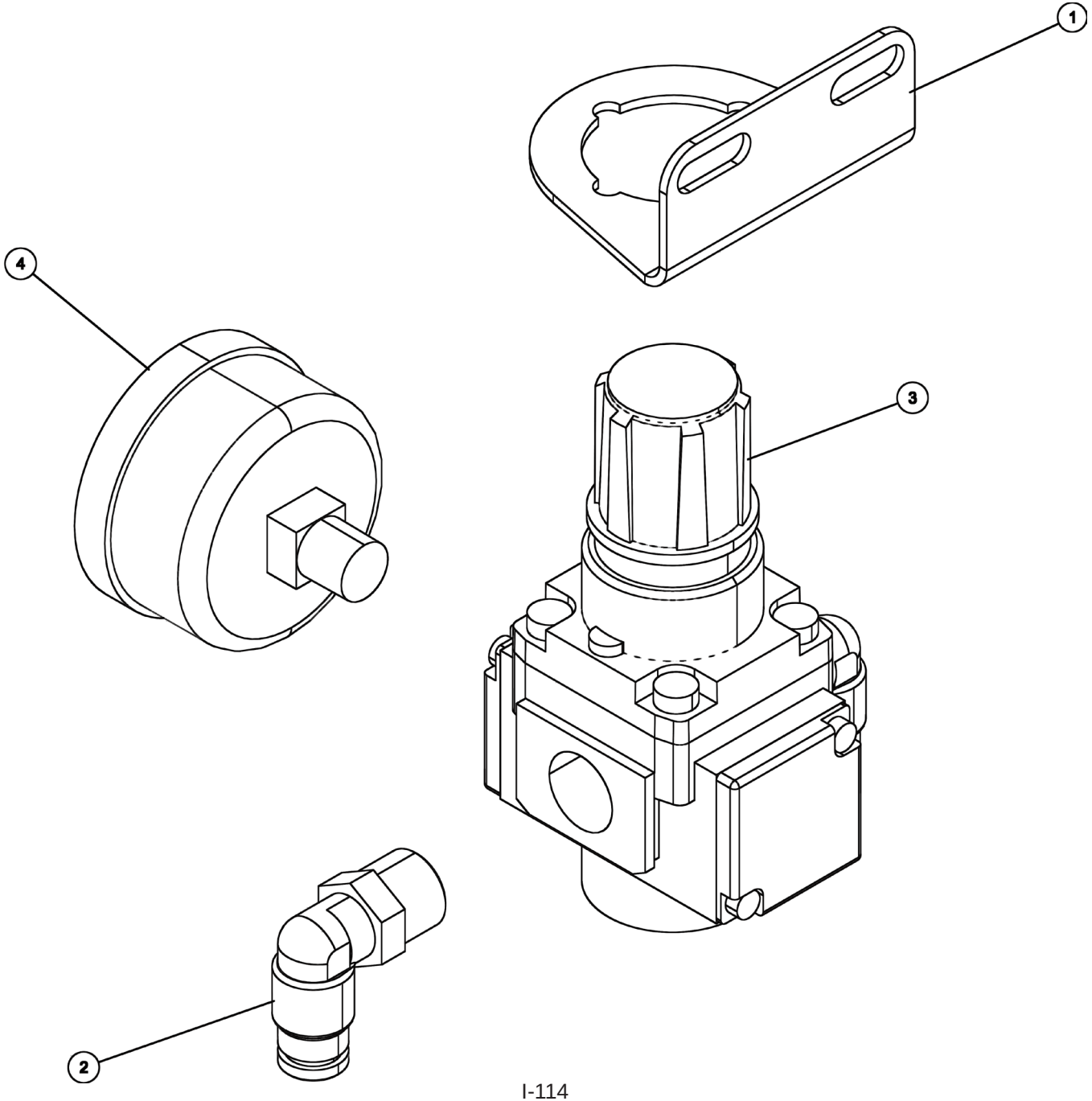

0911804, AIR REGULATOR-GAUGE ASSEMBLY

ITEM	PART NUMBER	DESCRIPTION	QTY
	0911804	AIR REGULATOR-GAUGE ASSEMBLY	-
1	0303365	BRACKET, MOUNTING - AIR PREP	1
2	9010520	FITTING-ELBOW 1/4T-1/4NPT	2
3	HA0131	REGULATOR , AIR	1
4	HA0132	GAUGE 0-160 PSI	1

09003870, WINCH ASSEMBLY, 1135 35K

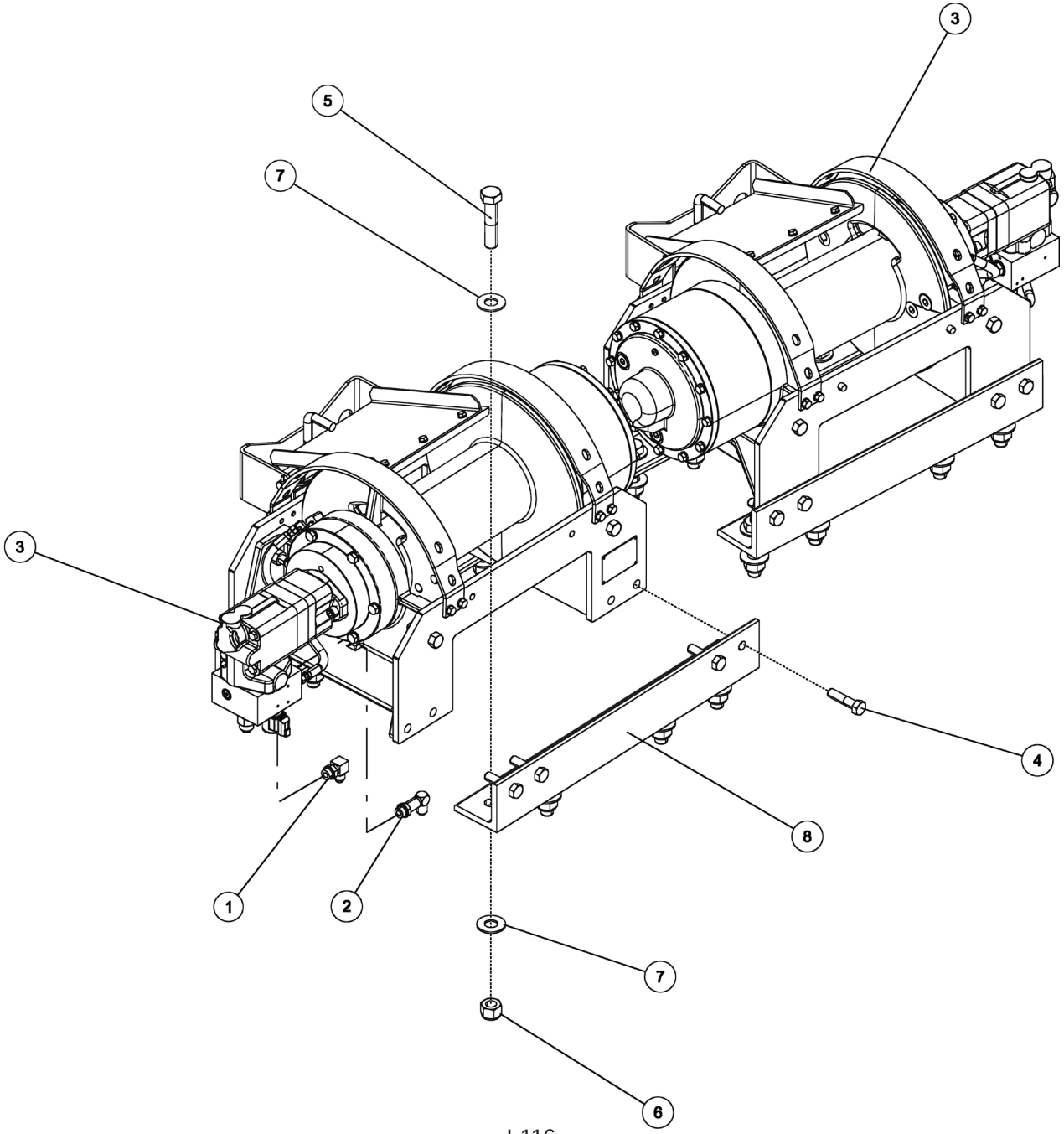

09003870, WINCH ASSEMBLY, 1135 35K

ITEM	PART NUMBER	DESCRIPTION	QTY
	09003870	WINCH ASSY 1135 W/ 35K WINCHES	-
1	0301388	ELBOW, 8MJ-8MB90	2
2	0302508	FITTING, ELL 8MJ-8MB 90LL	2
3	0307061	WINCH-35K dp 2-SP N.DRUM W/TEN	2
4	0400262	SCREW, 5/8-11X2-1/2 HHC GR8	1
5	0400307	SCREW, 7/8-9X4 HHC GR8	1
6	0400437	NUT, 7/8-9 LOK GR8	1
7	0400473	WASHER, 7/8 PL GR8	3
8	0722104	ANGLE - WINCH MOUNTING	4

09004266, UNDERLIFT BOOM ASSEMBLY

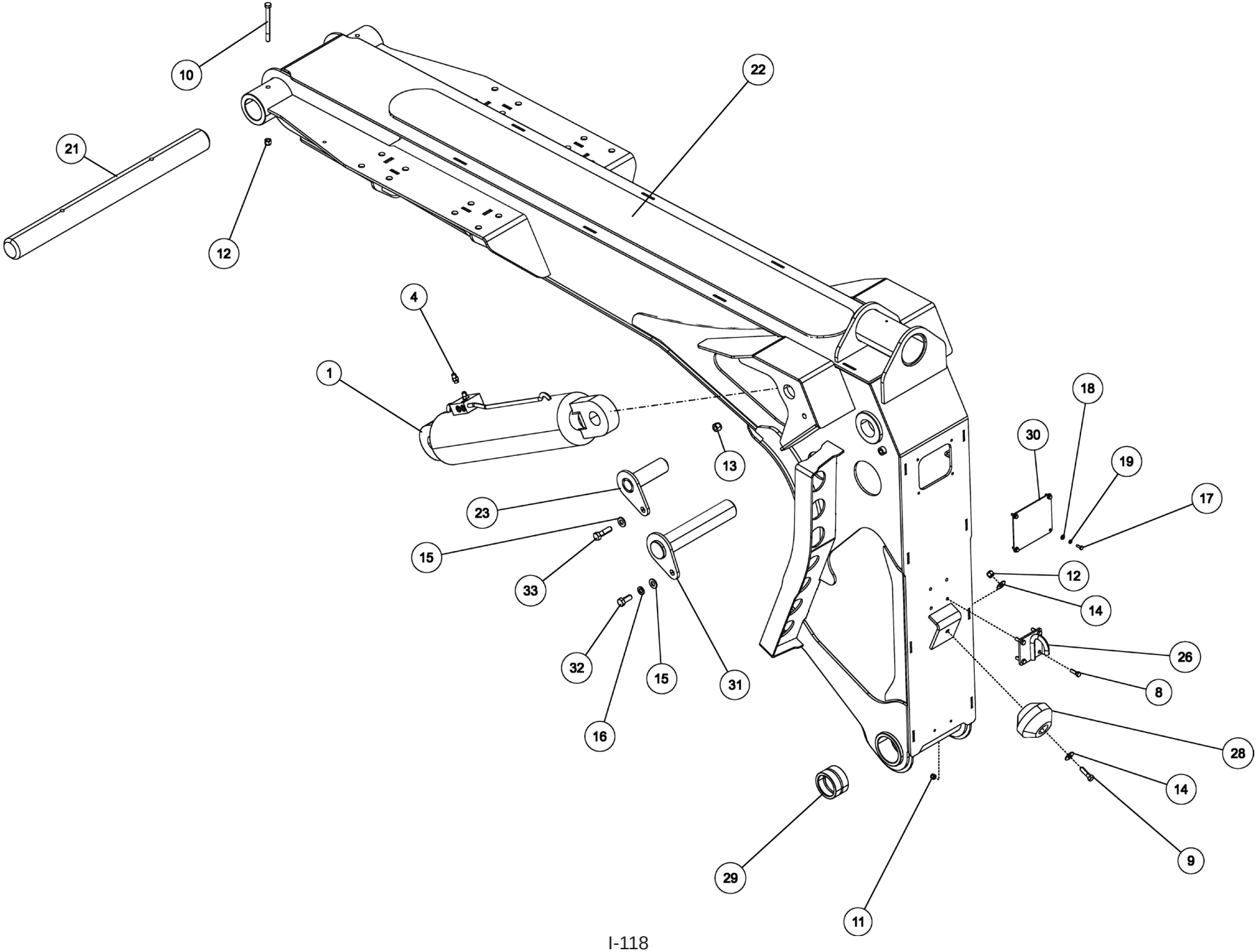

09004266, UNDERLIFT BOOM ASSEMBLY

ITEM	PART NUMBER	DESCRIPTION	QTY
	09004266	U/L BOOM ASSEMBLY (SHORT)	-
1	03001432	CYLINDER, U/L LIFT	2
2	03001433	CYLINDER, U/L TILT	1
3	0301470	FITTING, 90ELB 6MJ-8MB90	2
4	0301522	ADAPTER, 6MJ-6MB	4
5	0310480	FITTING - BULKHEAD -6 UNION	4
6	0311418	HOSE, 90" 3/8 2 X STRAIGHT	2
7	04000401	SCREW, 5/8-11X2-3/4 HHC GR8	1
8	0400122	SCREW, 3/8-16X1-1/4 HHC GR5	4
9	0400211	SCREW, 1/2-13X1-3/4 HHC GR5	1
10	0400220	SCREW, 1/2-13X5-1/2 HHC GR5	2
11	0400392	NUT, 3/8-16 LOK	4
12	0400408	NUT, 1/2-13 LOK	3
13	0400426	NUT, 5/8-11 LOK GR8	3
14	0400492	WASHER, 1/2	2
15	0400503	WASHER, 5/8 GR8	5
16	0400508	LKWASHER, 5/8	2
17	0402020	SCREW, 1/4-20X3/4 HHC SS	4
18	0402110	WASHER, 1/4 SS	4
19	0402111	LKWASHER, 1/4 SS	4
20	0410410	GREASE FITTING, M6-1.0 STR SS	2
21	0715953	PIN, BOOM PIVOT	1
22	08001034	U/L BOOM WELDMENT	1
23	08001289	U/L LIFT CYLINDER PIN WELDMENT	2
24	08001290	U/L PIVOT PIN WELDMENT	1
25	08002548	PIN WELDMENT, LOWER TILT CYL	1
26	0810517	HOOK PLATE WLDMT	1
27	09003929	U/L HORIZONTAL BOOM ASSY	1
28	26113028	TIMBREN SPRING - A103B-75	1
29	26687448	BUSHING 3 ID X 3 75 OD X 2 31	2
30	26687481	PLATE, COVER - TILT CYL ACCESS	1
31	26688067	PIN WELD'T - UPPER TILT CYL	1
32	9043950	5/8 NC X 1 1/2 HHCS PL GR 8	2
33	9044409	SCREW, 5/8-11X2-1/4 HHC GR8 YZ	2

09004266, UNDERLIFT BOOM ASSEMBLY

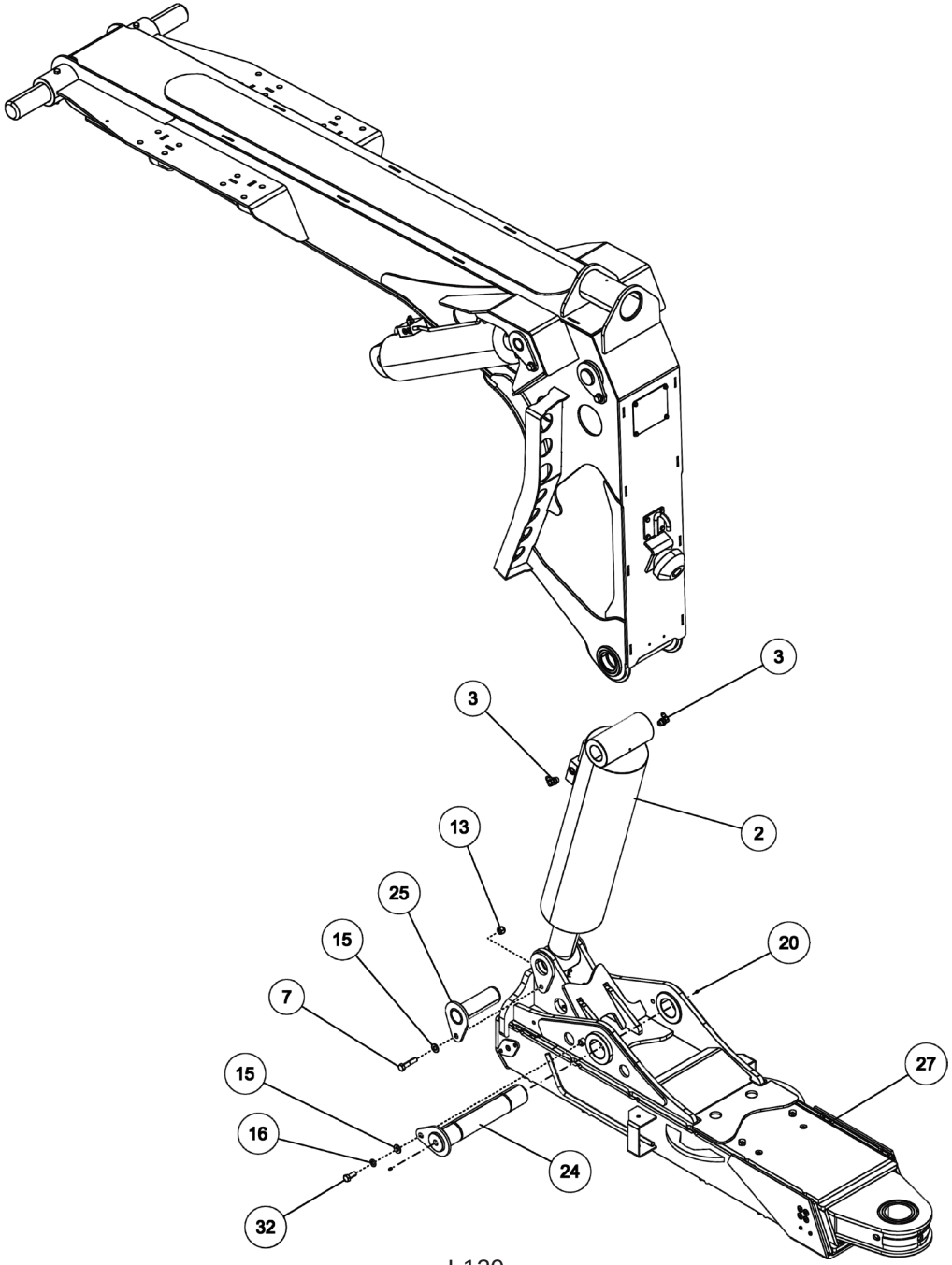

09004266, UNDERLIFT BOOM ASSEMBLY

ITEM	PART NUMBER	DESCRIPTION	QTY
	0906532	SWIVEL - BOOM ASSEMBLY	-
1	0300113	GREASE FITTING, 1/4-28 STR	1
2	0303441	SHEAVE-10" DIA X 1.5 BORE	1
3	0400133	SCREW, 3/8-16X3 HHC GR5	1
4	0400150	SCREW, 3/8-16X2-1/2 HHC GR5	2
5	0400392	NUT, 3/8-16 LOK	3
6	0700801	GUIDE, BTM CABLE	2
7	0716134	SHEAVE SHAFT	1
8	0803313	GUIDE-CABLE WELDMENT	1
9	0804449	BOOM END SWIVEL WLDT-INTEGRATD	1

09004266, UNDERLIFT BOOM ASSEMBLY

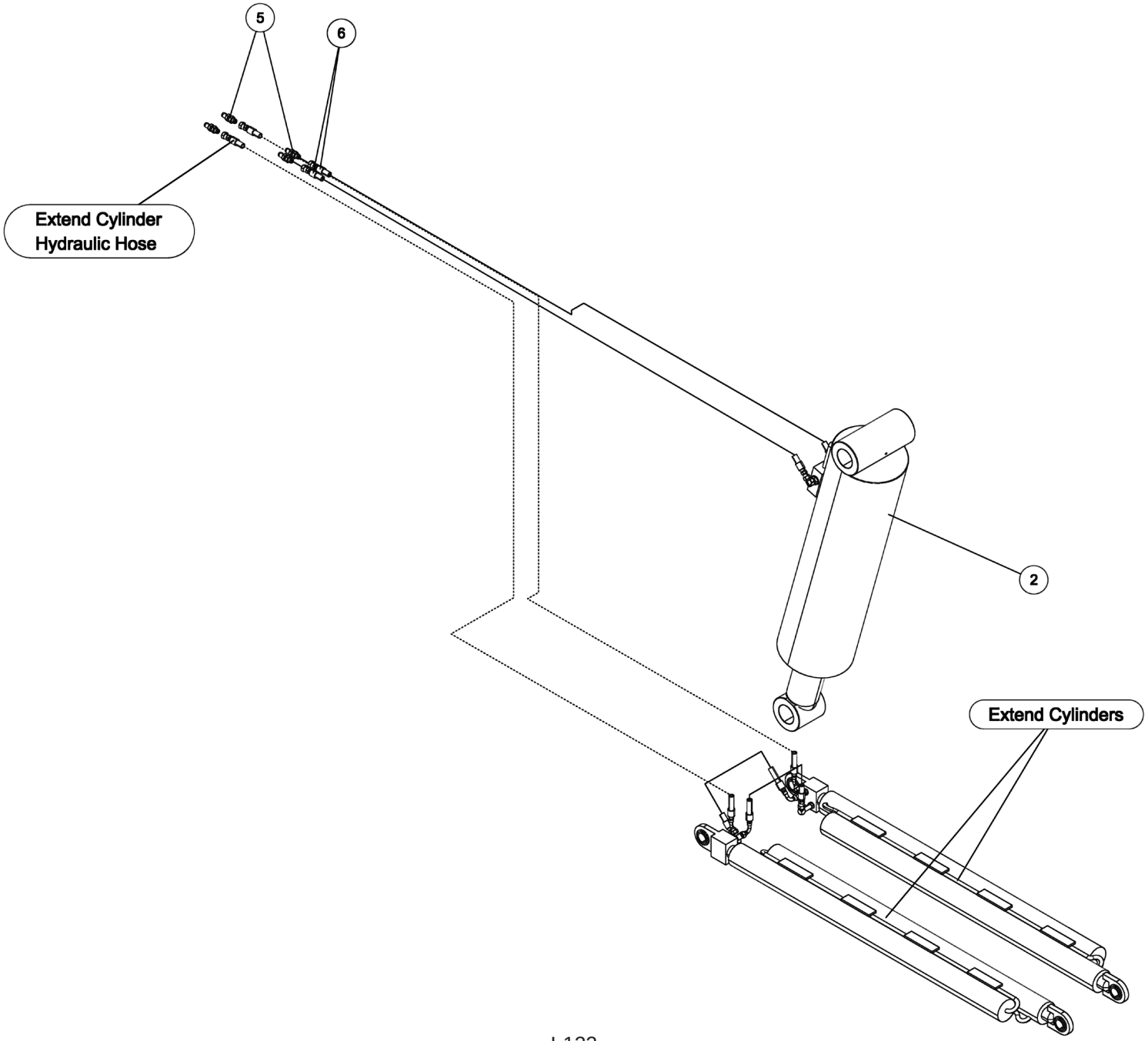

09004266, UNDERLIFT BOOM ASSEMBLY

ITEM	PART NUMBER	DESCRIPTION	QTY
	0906532	SWIVEL - BOOM ASSEMBLY	-
1	0300113	GREASE FITTING, 1/4-28 STR	1
2	0303441	SHEAVE-10" DIA X 1.5 BORE	1
3	0400133	SCREW, 3/8-16X3 HHC GR5	1
4	0400150	SCREW, 3/8-16X2-1/2 HHC GR5	2
5	0400392	NUT, 3/8-16 LOK	3
6	0700801	GUIDE, BTM CABLE	2
7	0716134	SHEAVE SHAFT	1
8	0803313	GUIDE-CABLE WELDMENT	1
9	0804449	BOOM END SWIVEL WLDT-INTEGRATD	1

09003929, UNDERLIFT HORIZONTAL BOOM ASSEMBLY

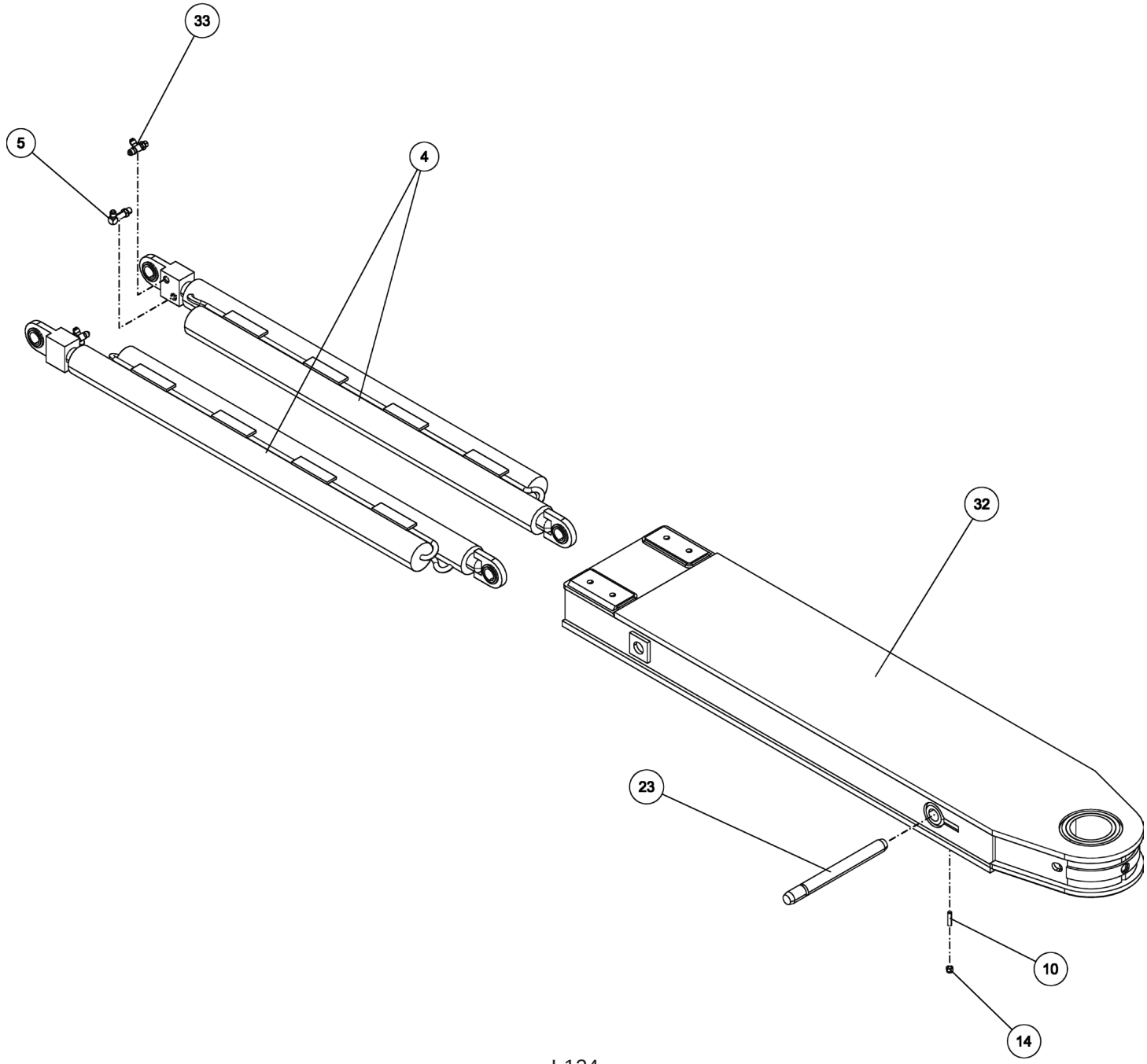

09003929, UNDERLIFT HORIZONTAL BOOM ASSEMBLY

ITEM	PART NUMBER	DESCRIPTION	QTY
	09003929	U/L HORIZONTAL BOOM ASSY	-
1	0300113	GREASE FITTING, 1/4-28 STR	4
2	03003427	HOSE, HYD 192" LG	2
3	0303968	HOSE HYD, 10" LG	2
4	0307425	CYL, HYD - U/L BOOM EXTEND	2
5	0307460	FITTING, HYD 6MJ-6MB90LL	2
6	0311442	WEAR PAD (15/16 x 1 x 4)	2
7	0400079	SCREW, 1/4-20X3/4 FHS GR5	8
8	0400086	SCREW, 1/4-20X1-1/4 FHS	4
9	0400118	SCREW, 5/16-18X3/4 HHC GR5	3
10	0400139	SET SCREW, 3/8-16X1-1/2 SOC	1
11	0400249	SCREW, 5/8-11X1-1/4 SHC	2
12	0400344	SCREW, 1/2-13X3/4 FHS GR8	8
13	0400379	NUT, 5/16-18 SPR J	1
14	0400392	NUT, 3/8-16 LOK	1
15	0400463	WASHER, 5/16	3
16	0400464	LKWASHER, 5/16	3
17	0400594	SCREW, 1/4-20X5/8 FHS	4
18	0400749	SCREW, 1/2-13X1-1/4 FHS	1
19	0400990	SET SCREW, 1/2-13X1/2 SOC	4
20	07004402	ANGLE, HOSE COVER	1
21	07004403	PLATE, HOSE COVER	1
22	0717869	PLATE, SPACER (BOLT-ON)	4
23	0717871	PIN, CYLINDER ROD	1
24	0717872	PIN, EXTEND CYLINDER BASE	1
25	0717873	PIN, SHEAR OUTER BOOM	2
26	0718087	PLATE - PAD SPACER	2
27	0718096	BLOCK, STOP	2
28	0724419	PLATE-PLUG RETAINER	2
29	08001288	EXTEND CYL BRACKET WELDMENT	1
30	08003427	U/L OUTER BOOM WELDMENT	1
31	0810106	2nd STAGE BOOM WLMT	1
32	0908282	INNER BOOM ASSY	1
33	9012594	FITT,HYD RUN TEE, 6MJx6MBx6MJ	2
34	930150003	TOP PADS	6
35	GH246	SPLIT RUBBER GROMMET	2

09003929, UNDERLIFT HORIZONTAL BOOM ASSEMBLY

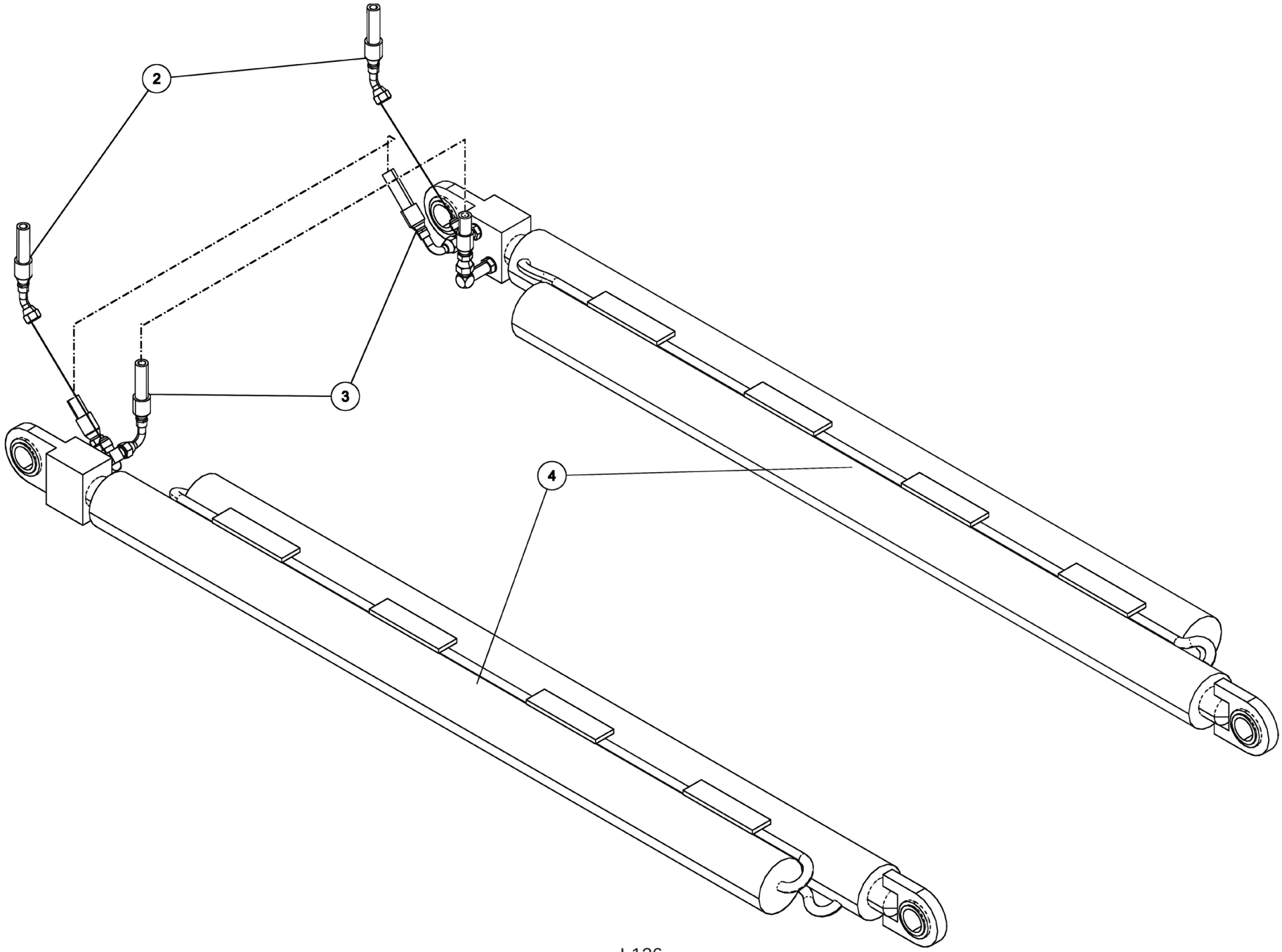

09003929, UNDERLIFT HORIZONTAL BOOM ASSEMBLY

ITEM	PART NUMBER	DESCRIPTION	QTY
	09003929	U/L HORIZONTAL BOOM ASSY	-
1	0300113	GREASE FITTING, 1/4-28 STR	4
2	03003427	HOSE, HYD 192" LG	2
3	0303968	HOSE HYD, 10" LG	2
4	0307425	CYL, HYD - U/L BOOM EXTEND	2
5	0307460	FITTING, HYD 6MJ-6MB90LL	2
6	0311442	WEAR PAD (15/16 x 1 x 4)	2
7	0400079	SCREW, 1/4-20X3/4 FHS GR5	8
8	0400086	SCREW, 1/4-20X1-1/4 FHS	4
9	0400118	SCREW, 5/16-18X3/4 HHC GR5	3
10	0400139	SET SCREW, 3/8-16X1-1/2 SOC	1
11	0400249	SCREW, 5/8-11X1-1/4 SHC	2
12	0400344	SCREW, 1/2-13X3/4 FHS GR8	8
13	0400379	NUT, 5/16-18 SPR J	1
14	0400392	NUT, 3/8-16 LOK	1
15	0400463	WASHER, 5/16	3
16	0400464	LKWASHER, 5/16	3
17	0400594	SCREW, 1/4-20X5/8 FHS	4
18	0400749	SCREW, 1/2-13X1-1/4 FHS	1
19	0400990	SET SCREW, 1/2-13X1/2 SOC	4
20	07004402	ANGLE, HOSE COVER	1
21	07004403	PLATE, HOSE COVER	1
22	0717869	PLATE, SPACER (BOLT-ON)	4
23	0717871	PIN, CYLINDER ROD	1
24	0717872	PIN, EXTEND CYLINDER BASE	1
25	0717873	PIN, SHEAR OUTER BOOM	2
26	0718087	PLATE - PAD SPACER	2
27	0718096	BLOCK, STOP	2
28	0724419	PLATE-PLUG RETAINER	2
29	08001288	EXTEND CYL BRACKET WELDMENT	1
30	08003427	U/L OUTER BOOM WELDMENT	1
31	0810106	2nd STAGE BOOM WLMT	1
32	0908282	INNER BOOM ASSY	1
33	9012594	FITT,HYD RUN TEE, 6MJx6MBx6MJ	2
34	930150003	TOP PADS	6
35	GH246	SPLIT RUBBER GROMMET	2

09003929, UNDERLIFT HORIZONTAL BOOM ASSEMBLY

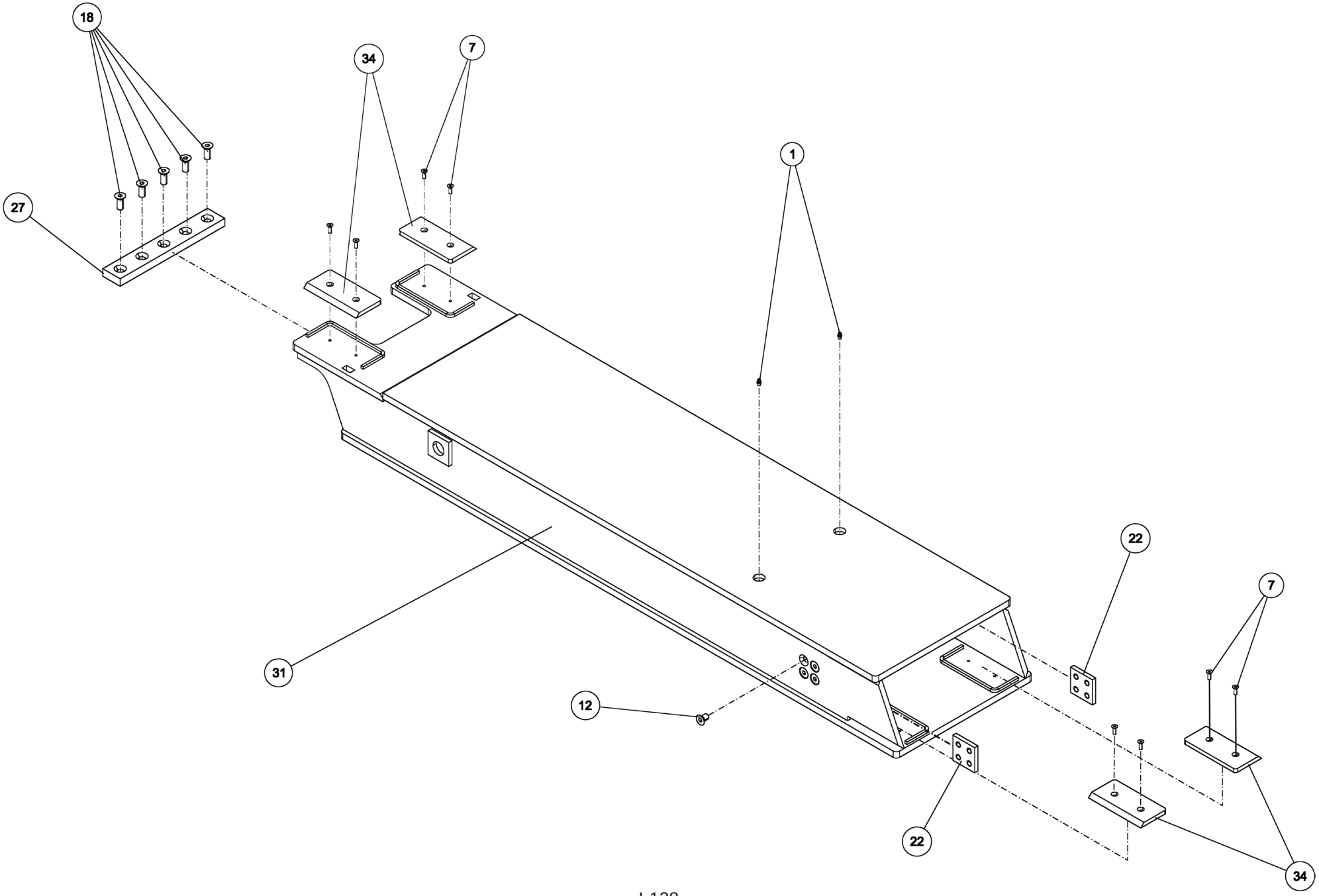

09003929, UNDERLIFT HORIZONTAL BOOM ASSEMBLY

ITEM	PART NUMBER	DESCRIPTION	QTY
	09003929	U/L HORIZONTAL BOOM ASSY	-
1	0300113	GREASE FITTING, 1/4-28 STR	4
2	03003427	HOSE, HYD 192" LG	2
3	0303968	HOSE HYD, 10" LG	2
4	0307425	CYL, HYD - U/L BOOM EXTEND	2
5	0307460	FITTING, HYD 6MJ-6MB90LL	2
6	0311442	WEAR PAD (15/16 x 1 x 4)	2
7	0400079	SCREW, 1/4-20X3/4 FHS GR5	8
8	0400086	SCREW, 1/4-20X1-1/4 FHS	4
9	0400118	SCREW, 5/16-18X3/4 HHC GR5	3
10	0400139	SET SCREW, 3/8-16X1-1/2 SOC	1
11	0400249	SCREW, 5/8-11X1-1/4 SHC	2
12	0400344	SCREW, 1/2-13X3/4 FHS GR8	8
13	0400379	NUT, 5/16-18 SPR J	1
14	0400392	NUT, 3/8-16 LOK	1
15	0400463	WASHER, 5/16	3
16	0400464	LKWASHER, 5/16	3
17	0400594	SCREW, 1/4-20X5/8 FHS	4
18	0400749	SCREW, 1/2-13X1-1/4 FHS	1
19	0400990	SET SCREW, 1/2-13X1/2 SOC	4
20	07004402	ANGLE, HOSE COVER	1
21	07004403	PLATE, HOSE COVER	1
22	0717869	PLATE, SPACER (BOLT-ON)	4
23	0717871	PIN, CYLINDER ROD	1
24	0717872	PIN, EXTEND CYLINDER BASE	1
25	0717873	PIN, SHEAR OUTER BOOM	2
26	0718087	PLATE - PAD SPACER	2
27	0718096	BLOCK, STOP	2
28	0724419	PLATE-PLUG RETAINER	2
29	08001288	EXTEND CYL BRACKET WELDMENT	1
30	08003427	U/L OUTER BOOM WELDMENT	1
31	0810106	2nd STAGE BOOM WLMT	1
32	0908282	INNER BOOM ASSY	1
33	9012594	FITT,HYD RUN TEE, 6MJx6MBx6MJ	2
34	930150003	TOP PADS	6
35	GH246	SPLIT RUBBER GROMMET	2

09003929, UNDERLIFT HORIZONTAL BOOM ASSEMBLY

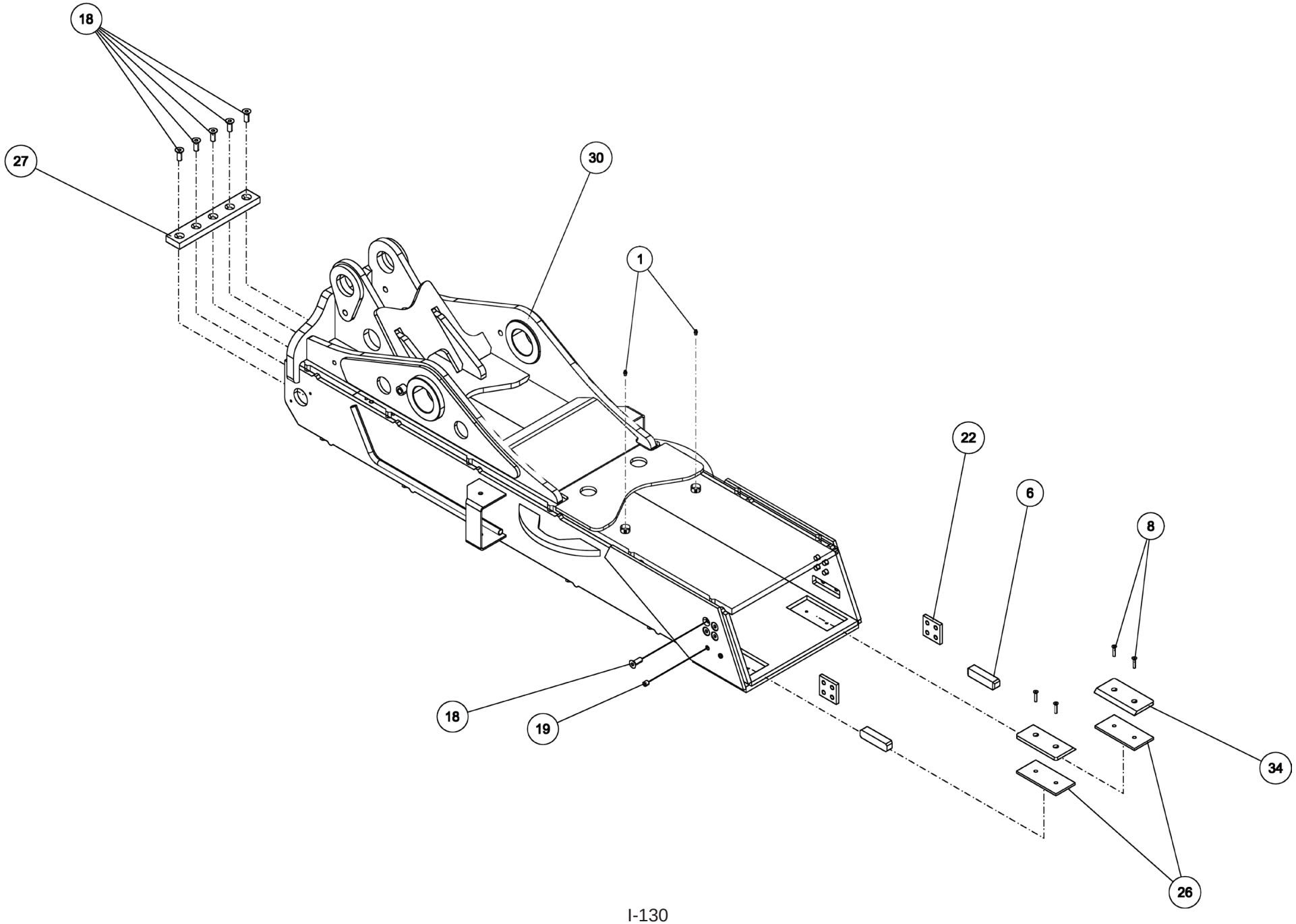

09003929, UNDERLIFT HORIZONTAL BOOM ASSEMBLY

ITEM	PART NUMBER	DESCRIPTION	QTY
	09003929	U/L HORIZONTAL BOOM ASSY	-
1	0300113	GREASE FITTING, 1/4-28 STR	4
2	03003427	HOSE, HYD 192" LG	2
3	0303968	HOSE HYD, 10" LG	2
4	0307425	CYL, HYD - U/L BOOM EXTEND	2
5	0307460	FITTING, HYD 6MJ-6MB90LL	2
6	0311442	WEAR PAD (15/16 x 1 x 4)	2
7	0400079	SCREW, 1/4-20X3/4 FHS GR5	8
8	0400086	SCREW, 1/4-20X1-1/4 FHS	4
9	0400118	SCREW, 5/16-18X3/4 HHC GR5	3
10	0400139	SET SCREW, 3/8-16X1-1/2 SOC	1
11	0400249	SCREW, 5/8-11X1-1/4 SHC	2
12	0400344	SCREW, 1/2-13X3/4 FHS GR8	8
13	0400379	NUT, 5/16-18 SPR J	1
14	0400392	NUT, 3/8-16 LOK	1
15	0400463	WASHER, 5/16	3
16	0400464	LKWASHER, 5/16	3
17	0400594	SCREW, 1/4-20X5/8 FHS	4
18	0400749	SCREW, 1/2-13X1-1/4 FHS	1
19	0400990	SET SCREW, 1/2-13X1/2 SOC	4
20	07004402	ANGLE, HOSE COVER	1
21	07004403	PLATE, HOSE COVER	1
22	0717869	PLATE, SPACER (BOLT-ON)	4
23	0717871	PIN, CYLINDER ROD	1
24	0717872	PIN, EXTEND CYLINDER BASE	1
25	0717873	PIN, SHEAR OUTER BOOM	2
26	0718087	PLATE - PAD SPACER	2
27	0718096	BLOCK, STOP	2
28	0724419	PLATE-PLUG RETAINER	2
29	08001288	EXTEND CYL BRACKET WELDMENT	1
30	08003427	U/L OUTER BOOM WELDMENT	1
31	0810106	2nd STAGE BOOM WLMT	1
32	0908282	INNER BOOM ASSY	1
33	9012594	FITT,HYD RUN TEE, 6MJx6MBx6MJ	2
34	930150003	TOP PADS	6
35	GH246	SPLIT RUBBER GROMMET	2

09003929, UNDERLIFT HORIZONTAL BOOM ASSEMBLY

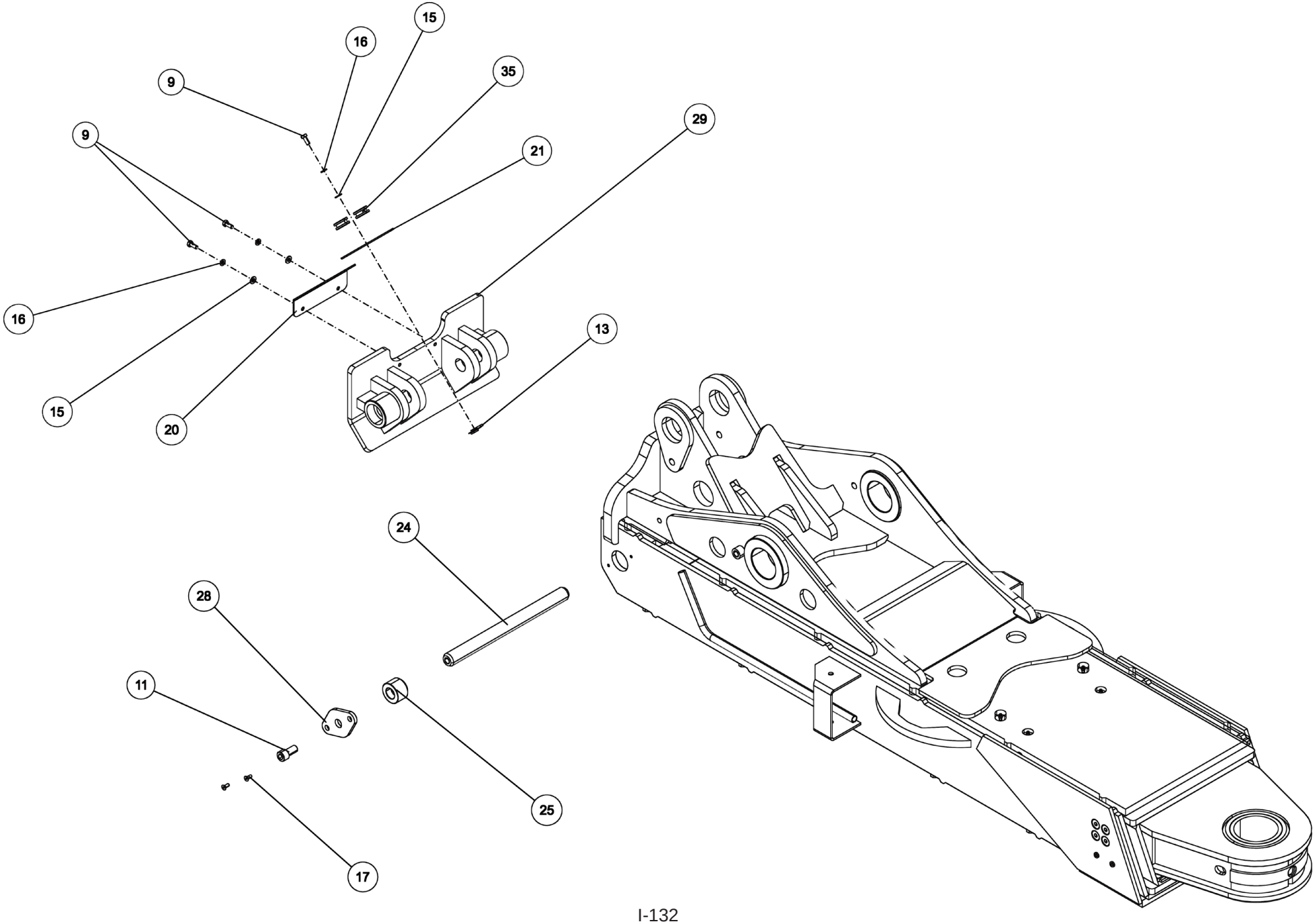

09003929, UNDERLIFT HORIZONTAL BOOM ASSEMBLY

ITEM	PART NUMBER	DESCRIPTION	QTY
	09003929	U/L HORIZONTAL BOOM ASSY	-
1	0300113	GREASE FITTING, 1/4-28 STR	4
2	03003427	HOSE, HYD 192" LG	2
3	0303968	HOSE HYD, 10" LG	2
4	0307425	CYL, HYD - U/L BOOM EXTEND	2
5	0307460	FITTING, HYD 6MJ-6MB90LL	2
6	0311442	WEAR PAD (15/16 x 1 x 4)	2
7	0400079	SCREW, 1/4-20X3/4 FHS GR5	8
8	0400086	SCREW, 1/4-20X1-1/4 FHS	4
9	0400118	SCREW, 5/16-18X3/4 HHC GR5	3
10	0400139	SET SCREW, 3/8-16X1-1/2 SOC	1
11	0400249	SCREW, 5/8-11X1-1/4 SHC	2
12	0400344	SCREW, 1/2-13X3/4 FHS GR8	8
13	0400379	NUT, 5/16-18 SPR J	1
14	0400392	NUT, 3/8-16 LOK	1
15	0400463	WASHER, 5/16	3
16	0400464	LKWASHER, 5/16	3
17	0400594	SCREW, 1/4-20X5/8 FHS	4
18	0400749	SCREW, 1/2-13X1-1/4 FHS	1
19	0400990	SET SCREW, 1/2-13X1/2 SOC	4
20	07004402	ANGLE, HOSE COVER	1
21	07004403	PLATE, HOSE COVER	1
22	0717869	PLATE, SPACER (BOLT-ON)	4
23	0717871	PIN, CYLINDER ROD	1
24	0717872	PIN, EXTEND CYLINDER BASE	1
25	0717873	PIN, SHEAR OUTER BOOM	2
26	0718087	PLATE - PAD SPACER	2
27	0718096	BLOCK, STOP	2
28	0724419	PLATE-PLUG RETAINER	2
29	08001288	EXTEND CYL BRACKET WELDMENT	1
30	08003427	U/L OUTER BOOM WELDMENT	1
31	0810106	2nd STAGE BOOM WLMT	1
32	0908282	INNER BOOM ASSY	1
33	9012594	FITT,HYD RUN TEE, 6MJx6MBx6MJ	2
34	930150003	TOP PADS	6
35	GH246	SPLIT RUBBER GROMMET	2

0908282, INNER BOOM ASSEMBLY

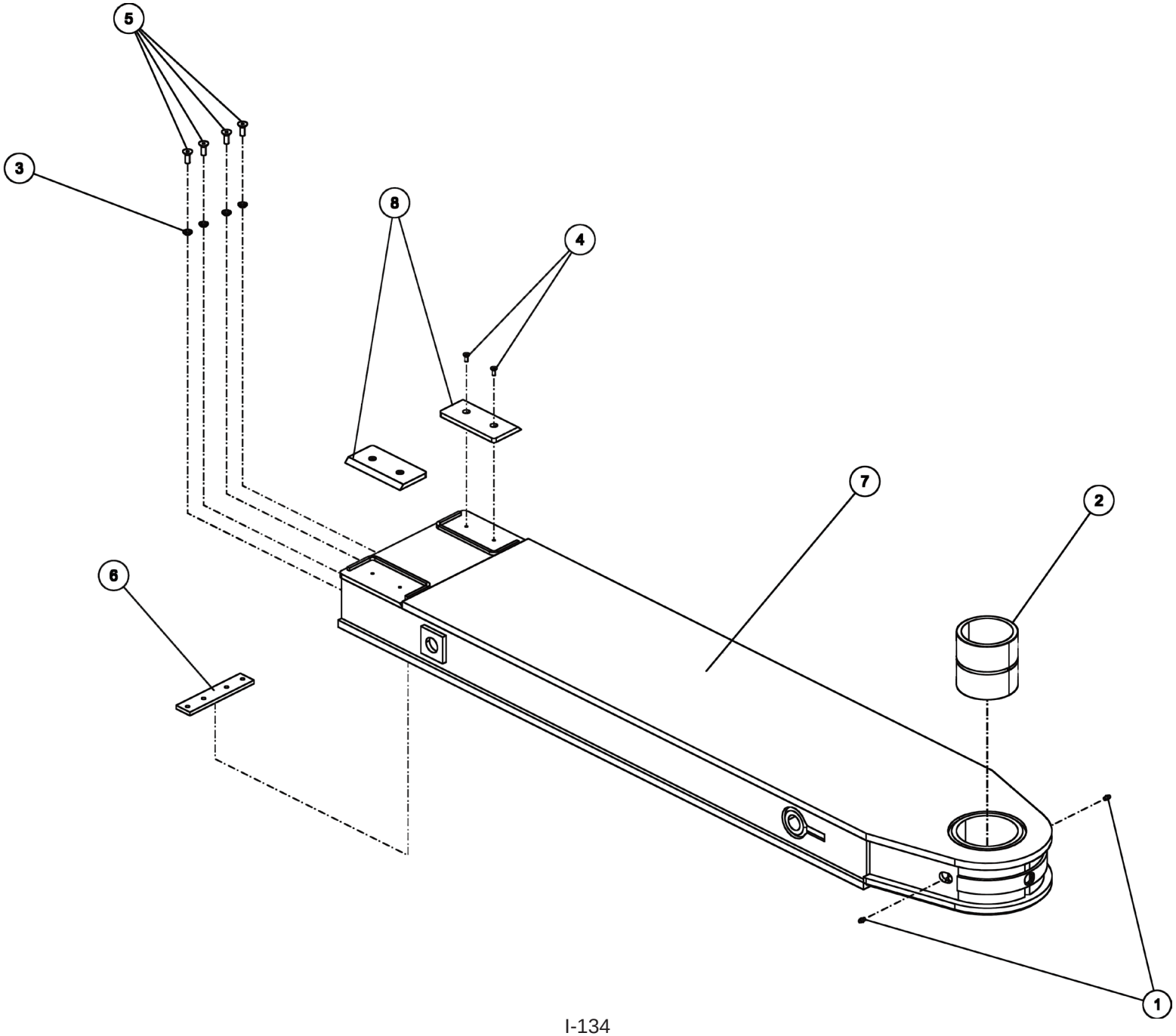

0908282, INNER BOOM ASSEMBLY

ITEM	PART NUMBER	DESCRIPTION	QTY
	0908282	INNER BOOM ASSY	-
1	0300113	GREASE FITTING, 1/4-28 STR	2
2	0303088	BUSHING - PIVOT PIN	1
3	0400483	LKWASHER, 3/8 CET	4
4	0400594	SCREW, 1/4-20X5/8 FHS	4
5	0400653	SCREW, 3/8-24X1 FHS	4
6	0706996	PAD, SPACER	1
7	0806813	BOOM - 3rd STAGE WLMT U/L	1
8	930150003	TOP PADS	2

0910188, 2-STAGE FRONT OUTRIGGER ASSEMBLY

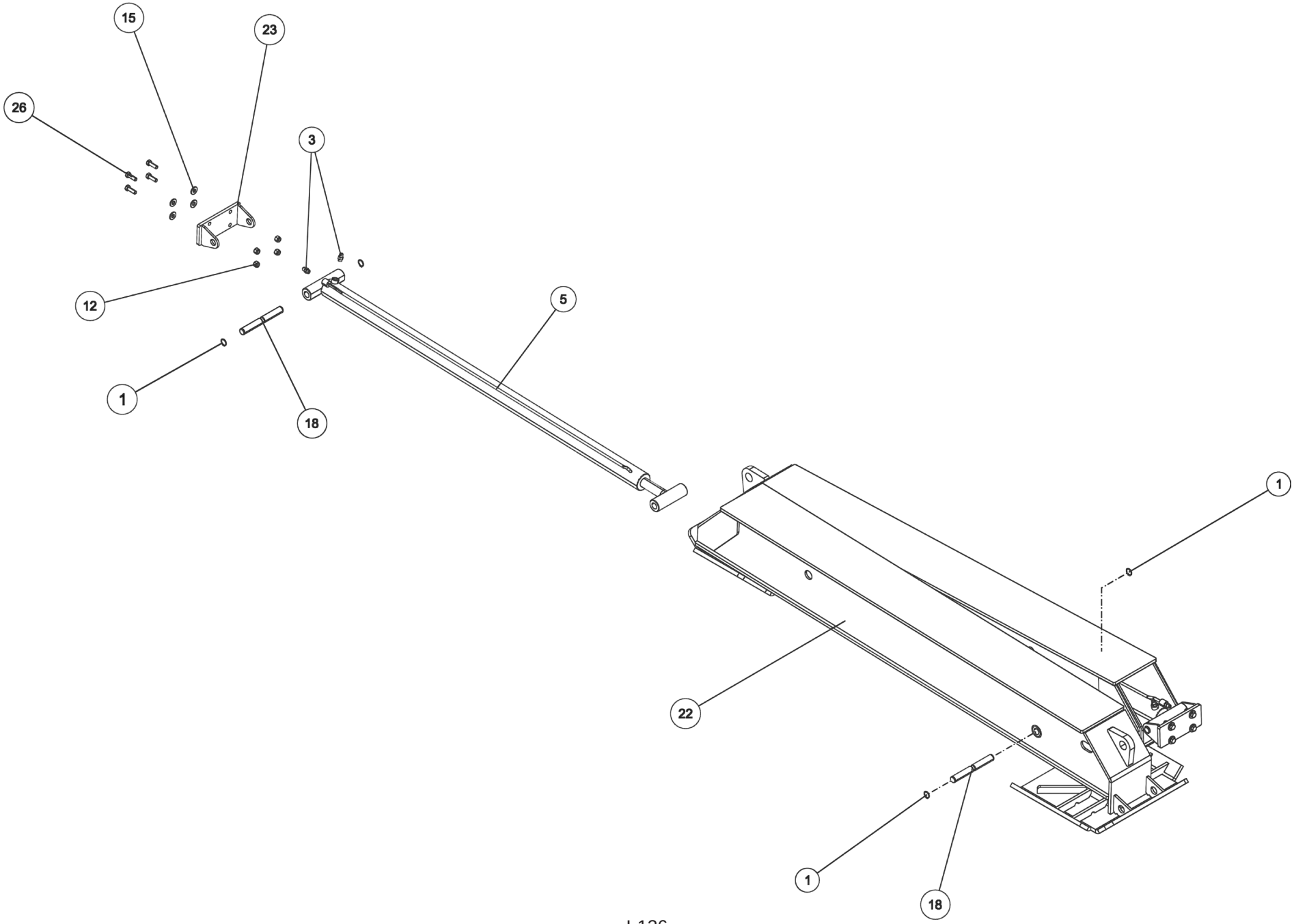

0910188, 2-STAGE FRONT OUTRIGGER ASSEMBLY

ITEM	PART NUMBER	DESCRIPTION	QTY
	0910188	2-STAGE FRONT OUTRIGGER ASSY	-
1	0300110	SNAP RING, 1" 5100-100	8
2	0300113	GREASE FITTING, 1/4-28 STR	4
3	0301522	ADAPTER, 6MJ-6MB	4
4	0302776	SNAP RING,EXTERNAL 2	4
5	0307639	CYL, HYD - MAIN BOOM EXT.	2
6	0312691	OUTRIGGER WEAR PAD 0.39x6x6.75	2
7	0400122	SCREW, 3/8-16X1-1/4 HHC GR5	4
8	0400126	SCREW, 3/8-16X1 HHC GR5	4
9	0400132	SCREW, 3/8-16X1-1/2 HHC GR5	2
10	0400392	NUT, 3/8-16 LOK	4
11	0400398	NUT, 3/8-16 LOK JAM	2
12	0400416	NUT, 1/2-13 LOK GR8	8
13	0400480	WASHER, 3/8	8
14	0400482	LKWASHER, 3/8	4
15	0400497	WASHER, 1/2 GR8	8
16	07000610	PLATE, PAD CAGE	2
17	07015387	PIN, H-BEAM PIVOT	2
18	0703137	SHAFT, EXT CYL OUTER BOOM	4
19	0721989	PLATE, CAM MOUNTING	1
20	0722124	PLATE, RIGHT CAM MOUNTING	1
21	0722174	ANGLE - CAM	2
22	0807357	FRONT OUTRIGGER BEAM WELDMENT	2
23	0807358	ADAPTER, CYLINDER	2
24	0810529	FRONT OUTRIGGER BOX WELDMENT	1
25	0910190	LOCK PIN ASSEMBLY	2
26	9041403	1/2 NC X 1 1/2 HHCS PL GR8	8

0910188, 2-STAGE FRONT OUTRIGGER ASSEMBLY

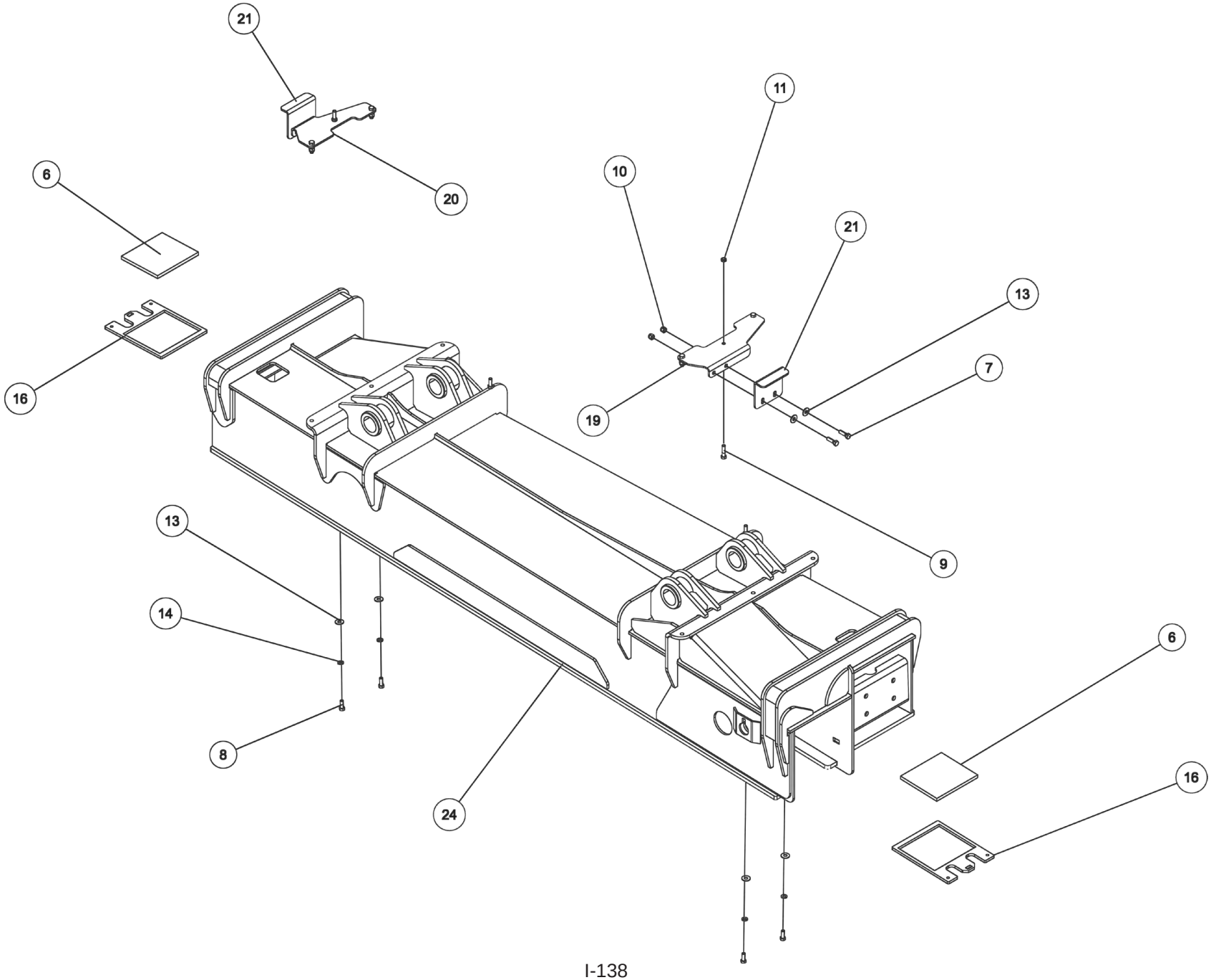

0910188, 2-STAGE FRONT OUTRIGGER ASSEMBLY

ITEM	PART NUMBER	DESCRIPTION	QTY
	0910188	2-STAGE FRONT OUTRIGGER ASSY	-
1	0300110	SNAP RING, 1" 5100-100	8
2	0300113	GREASE FITTING, 1/4-28 STR	4
3	0301522	ADAPTER, 6MJ-6MB	4
4	0302776	SNAP RING,EXTERNAL 2	4
5	0307639	CYL, HYD - MAIN BOOM EXT.	2
6	0312691	OUTRIGGER WEAR PAD 0.39x6x6.75	2
7	0400122	SCREW, 3/8-16X1-1/4 HHC GR5	4
8	0400126	SCREW, 3/8-16X1 HHC GR5	4
9	0400132	SCREW, 3/8-16X1-1/2 HHC GR5	2
10	0400392	NUT, 3/8-16 LOK	4
11	0400398	NUT, 3/8-16 LOK JAM	2
12	0400416	NUT, 1/2-13 LOK GR8	8
13	0400480	WASHER, 3/8	8
14	0400482	LKWASHER, 3/8	4
15	0400497	WASHER, 1/2 GR8	8
16	07000610	PLATE, PAD CAGE	2
17	07015387	PIN, H-BEAM PIVOT	2
18	0703137	SHAFT, EXT CYL OUTER BOOM	4
19	0721989	PLATE, CAM MOUNTING	1
20	0722124	PLATE, RIGHT CAM MOUNTING	1
21	0722174	ANGLE - CAM	2
22	0807357	FRONT OUTRIGGER BEAM WELDMENT	2
23	0807358	ADAPTER, CYLINDER	2
24	0810529	FRONT OUTRIGGER BOX WELDMENT	1
25	0910190	LOCK PIN ASSEMBLY	2
26	9041403	1/2 NC X 1 1/2 HHCS PL GR8	8

0910188, 2-STAGE FRONT OUTRIGGER ASSEMBLY

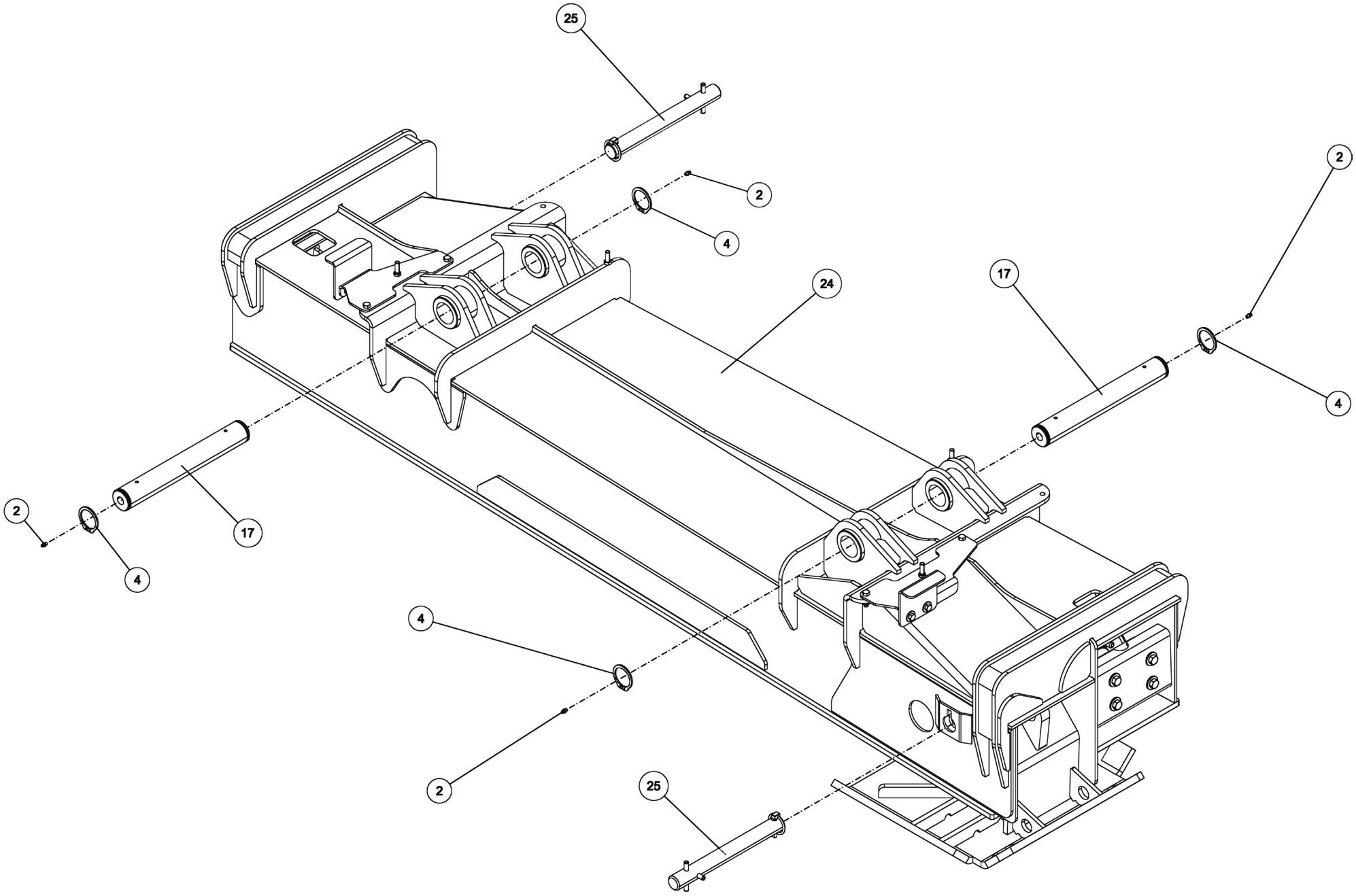

0910188, 2-STAGE FRONT OUTRIGGER ASSEMBLY

ITEM	PART NUMBER	DESCRIPTION	QTY
	0910188	2-STAGE FRONT OUTRIGGER ASSY	-
1	0300110	SNAP RING, 1" 5100-100	8
2	0300113	GREASE FITTING, 1/4-28 STR	4
3	0301522	ADAPTER, 6MJ-6MB	4
4	0302776	SNAP RING,EXTERNAL 2	4
5	0307639	CYL, HYD - MAIN BOOM EXT.	2
6	0312691	OUTRIGGER WEAR PAD 0.39x6x6.75	2
7	0400122	SCREW, 3/8-16X1-1/4 HHC GR5	4
8	0400126	SCREW, 3/8-16X1 HHC GR5	4
9	0400132	SCREW, 3/8-16X1-1/2 HHC GR5	2
10	0400392	NUT, 3/8-16 LOK	4
11	0400398	NUT, 3/8-16 LOK JAM	2
12	0400416	NUT, 1/2-13 LOK GR8	8
13	0400480	WASHER, 3/8	8
14	0400482	LKWASHER, 3/8	4
15	0400497	WASHER, 1/2 GR8	8
16	07000610	PLATE, PAD CAGE	2
17	07015387	PIN, H-BEAM PIVOT	2
18	0703137	SHAFT, EXT CYL OUTER BOOM	4
19	0721989	PLATE, CAM MOUNTING	1
20	0722124	PLATE, RIGHT CAM MOUNTING	1
21	0722174	ANGLE - CAM	2
22	0807357	FRONT OUTRIGGER BEAM WELDMENT	2
23	0807358	ADAPTER, CYLINDER	2
24	0810529	FRONT OUTRIGGER BOX WELDMENT	1
25	0910190	LOCK PIN ASSEMBLY	2
26	9041403	1/2 NC X 1 1/2 HHCS PL GR8	8

0910246, 3-STAGE REAR OUTRIGGER ASSEMBLY

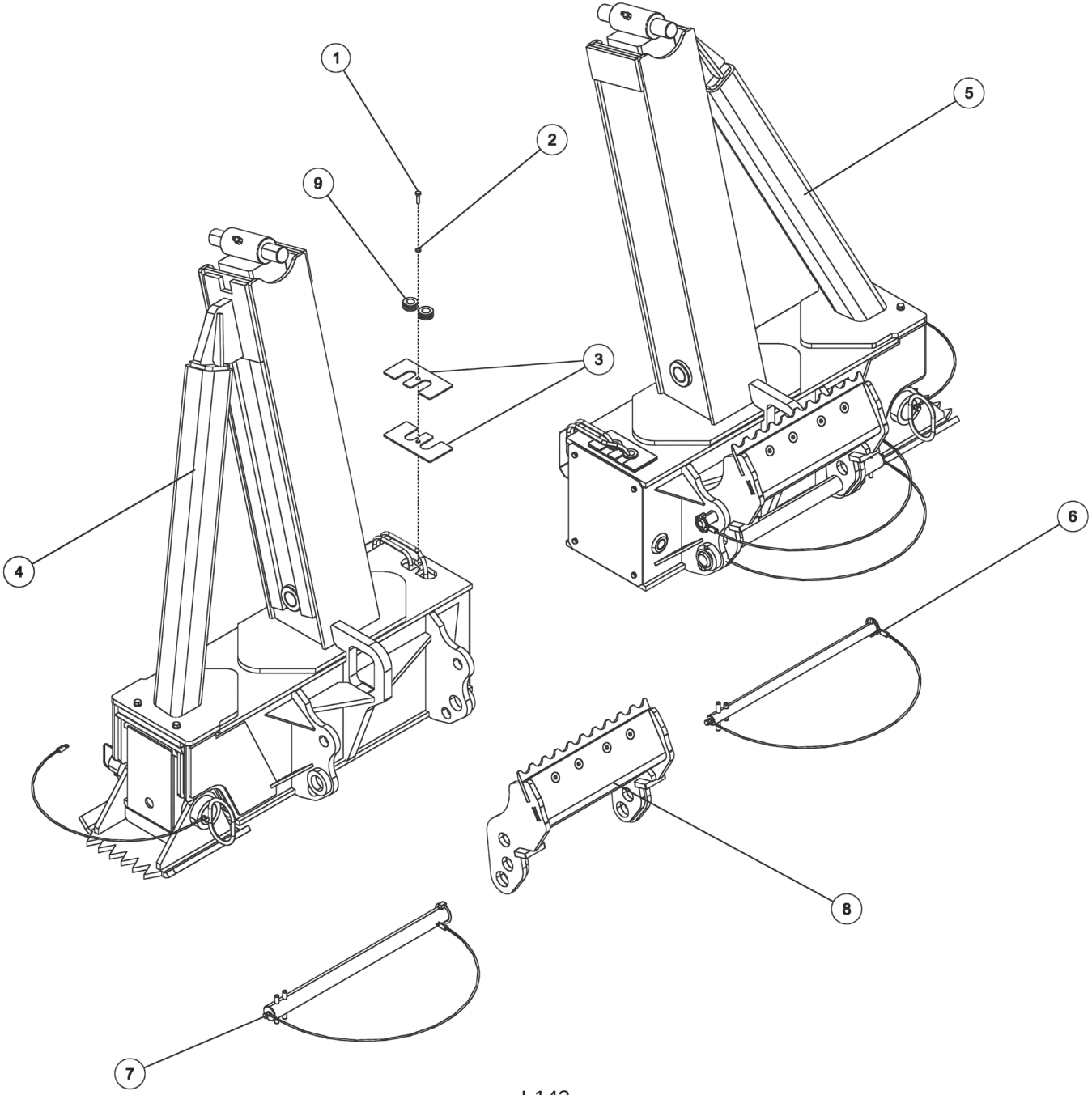

0910246, 3-STAGE REAR OUTRIGGER ASSEMBLY

ITEM	PART NUMBER	DESCRIPTION	QTY
	0910246	3-STAGE REAR OUTRIGGER ASSY	-
1	0400070	SCREW, 1/4-20X1 HHC GR5	2
2	0400452	LKWASHER, 1/4	2
3	0723889	PLATE-HOSE RETAINING	4
4	0910571	LH 3-STAGE REAR OUTRIGGER ASSY	1
5	0910572	RH 3-STAGE REAR OUTRIGGER ASSY	1
6	0911123	PIN ASSY - SPADE LOCK	2
7	0911124	PIN ASSY - SPADE PIVOT	2
8	0911167	SPADE ASSY - REAR OUTRIGGER	2
9	GH246	SPLIT RUBBER GROMMET	4

0910571, LH 3-STAGE REAR OUTRIGGER ASSEMBLY

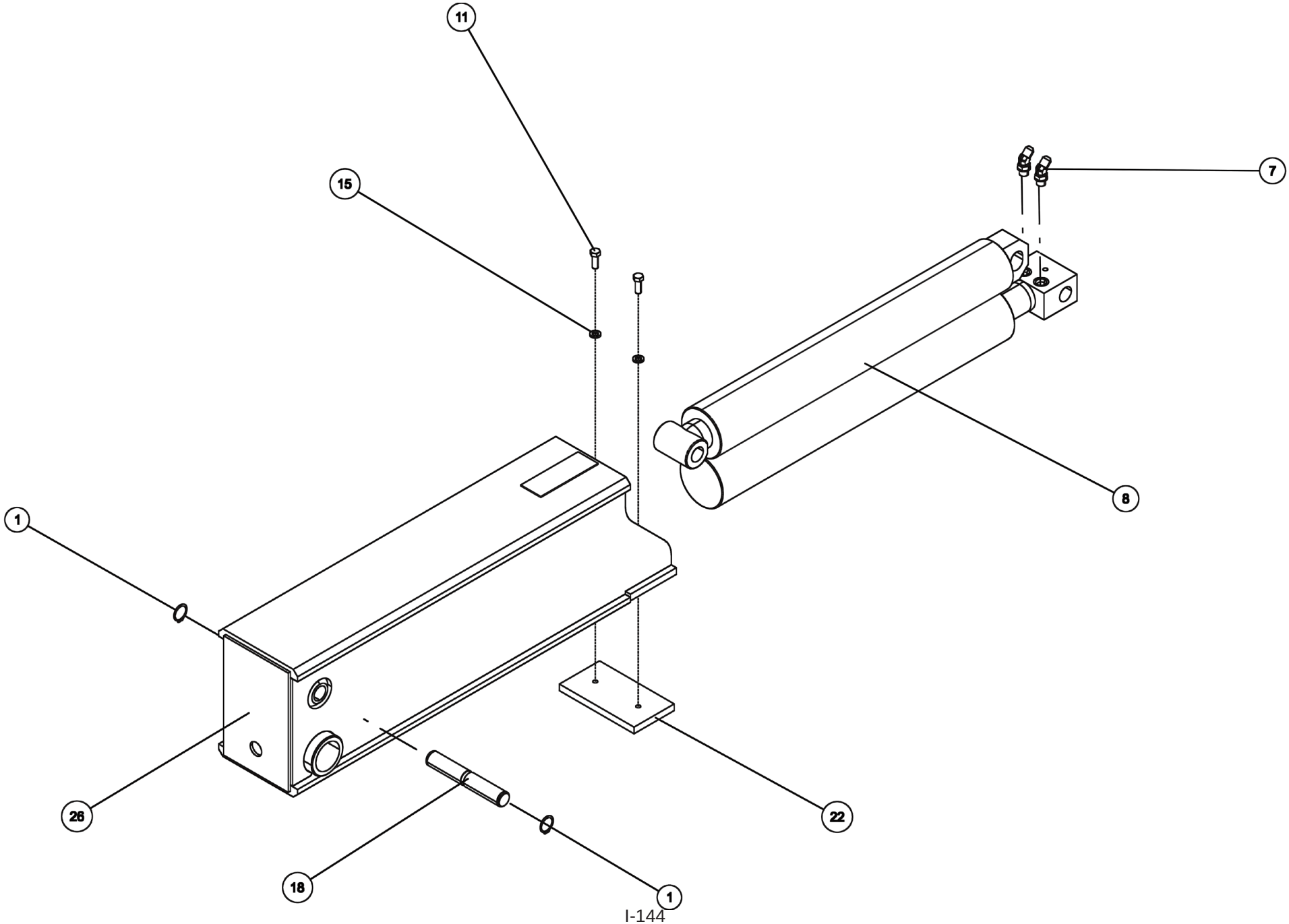

0910571, LH 3-STAGE REAR OUTRIGGER ASSEMBLY

ITEM	PART NUMBER	DESCRIPTION	QTY
	0910571	LH 3-STAGE REAR OUTRIGGER ASSY	-
1	0300110	SNAP RING, 1" 5100-100	4
2	0301422	FITTING, 6MJ-6MJ SMALL	2
3	0301522	ADAPTER, 6MJ-6MB	2
4	03015922	STAUFF CLAMP, 3/8 TWIN	2
5	03016385	TUBE, HYD 3-STG R O/R LH, EXT	1
6	03016386	TUBE, HYD 3-STG R O/R LH, RET	1
7	0302509	FITTING, ELB 45 DEG	2
8	0307001	HYD. TWIN CYL. ASSY REAR OUTR	1
9	0310707	CYLINDER, SPADE 4BOREx23STROKE	1
10	0400066	SCREW, 1/4-20X3/4 HHC GR5	4
11	0400126	SCREW, 3/8-16X1 HHC GR5	4
12	0400139	SET SCREW, 3/8-16X1-1/2 SOC	3
13	0400392	NUT, 3/8-16 LOK	3
14	0400452	LKWASHER, 1/4	4
15	0400482	LKWASHER, 3/8	4
16	07020905	PLATE, HARDLINE COVER LH	1
17	0703457	SHAFT, JACK CYL UPPER	1
18	0705499	SHAFT, UPPER SPADE	1
19	0707117	SHAFT, UPPER SPADE	1
20	0716141	COVER, OUTER HORIZ OUTRIGGER	1
21	0716644	SPACER, TOP	1
22	0716645	SPACER, BTM	1
23	0721901	PIN - OUTRIGGER TOP	1
24	0721902	PIN - OUTRIGGER BOTTOM	1
25	0804419	2ND STAGE OUTRIGGER BOOM WLD	1
26	0804420	3RD STAGE OUTRIGGER BOOM WLD	1
27	0807635	PAD REAR OUTRIGGER PAD	1
28	0810595	LH REAR 3-STG OUTR O/R WLDT 15	1
29	0906963	PIN - REAR OUTRIGGER PAD ASSY	1

0910571, LH 3-STAGE REAR OUTRIGGER ASSEMBLY

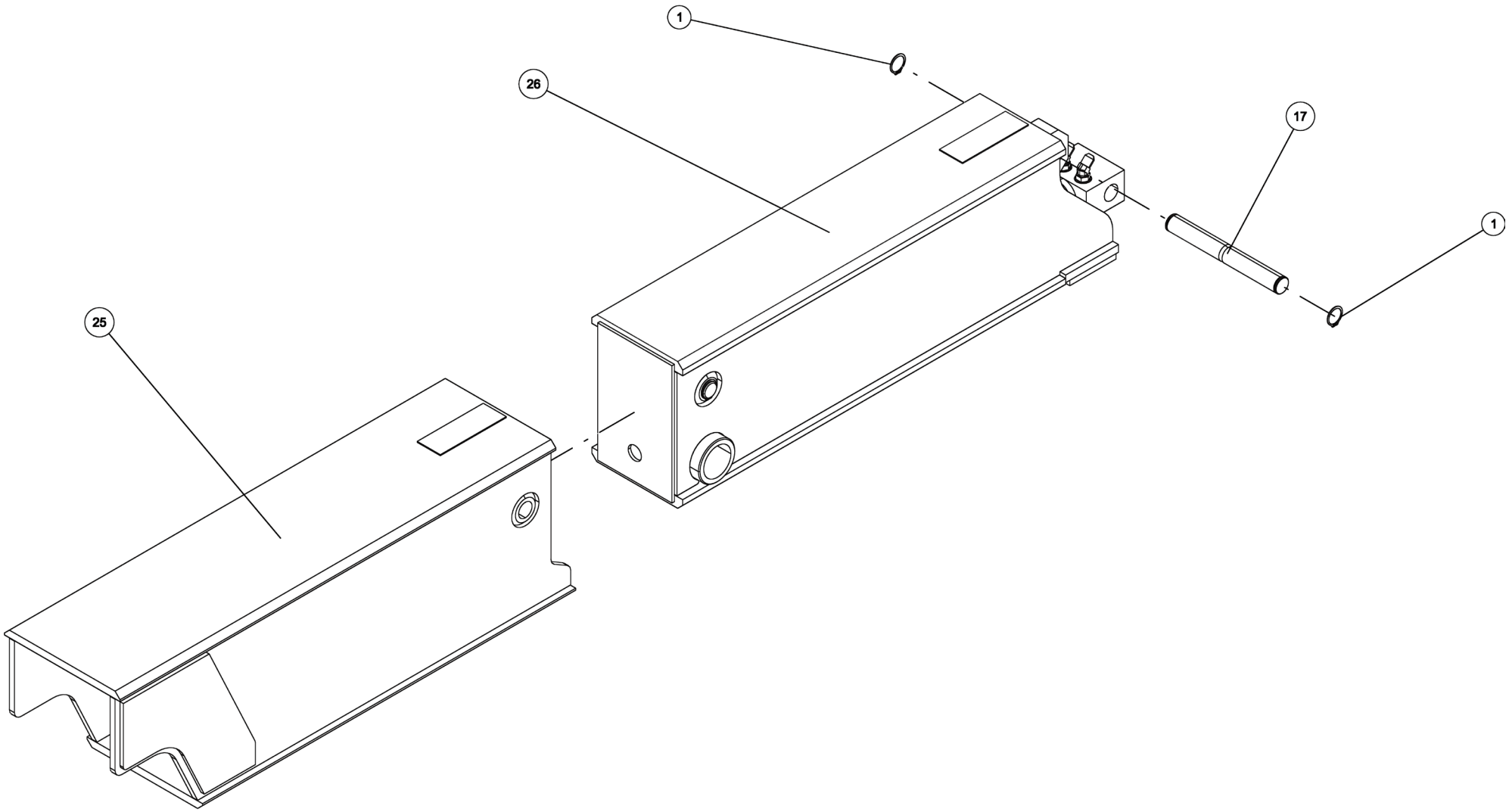

0910571, LH 3-STAGE REAR OUTRIGGER ASSEMBLY

ITEM	PART NUMBER	DESCRIPTION	QTY
	0910571	LH 3-STAGE REAR OUTRIGGER ASSY	-
1	0300110	SNAP RING, 1" 5100-100	4
2	0301422	FITTING, 6MJ-6MJ SMALL	2
3	0301522	ADAPTER, 6MJ-6MB	2
4	03015922	STAUFF CLAMP, 3/8 TWIN	2
5	03016385	TUBE, HYD 3-STG R O/R LH, EXT	1
6	03016386	TUBE, HYD 3-STG R O/R LH, RET	1
7	0302509	FITTING, ELB 45 DEG	2
8	0307001	HYD. TWIN CYL. ASSY REAR OUTR	1
9	0310707	CYLINDER, SPADE 4BOREx23STROKE	1
10	0400066	SCREW, 1/4-20X3/4 HHC GR5	4
11	0400126	SCREW, 3/8-16X1 HHC GR5	4
12	0400139	SET SCREW, 3/8-16X1-1/2 SOC	3
13	0400392	NUT, 3/8-16 LOK	3
14	0400452	LKWASHER, 1/4	4
15	0400482	LKWASHER, 3/8	4
16	07020905	PLATE, HARDLINE COVER LH	1
17	0703457	SHAFT, JACK CYL UPPER	1
18	0705499	SHAFT, UPPER SPADE	1
19	0707117	SHAFT, UPPER SPADE	1
20	0716141	COVER, OUTER HORIZ OUTRIGGER	1
21	0716644	SPACER, TOP	1
22	0716645	SPACER, BTM	1
23	0721901	PIN - OUTRIGGER TOP	1
24	0721902	PIN - OUTRIGGER BOTTOM	1
25	0804419	2ND STAGE OUTRIGGER BOOM WLD	1
26	0804420	3RD STAGE OUTRIGGER BOOM WLD	1
27	0807635	PAD REAR OUTRIGGER PAD	1
28	0810595	LH REAR 3-STG OUTR O/R WLDT 15	1
29	0906963	PIN - REAR OUTRIGGER PAD ASSY	1

0910571, LH 3-STAGE REAR OUTRIGGER ASSEMBLY

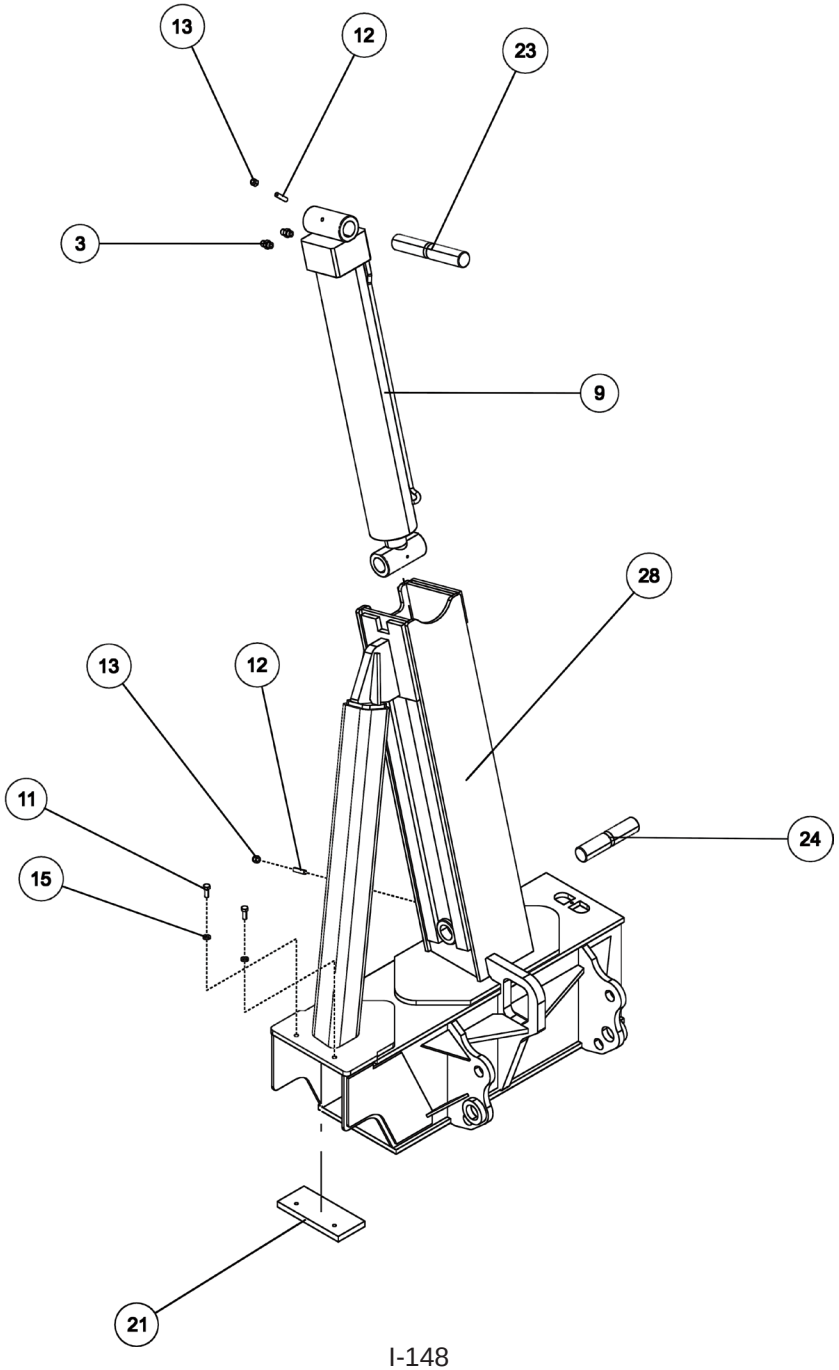

0910571, LH 3-STAGE REAR OUTRIGGER ASSEMBLY

ITEM	PART NUMBER	DESCRIPTION	QTY
	0910571	LH 3-STAGE REAR OUTRIGGER ASSY	-
1	0300110	SNAP RING, 1" 5100-100	4
2	0301422	FITTING, 6MJ-6MJ SMALL	2
3	0301522	ADAPTER, 6MJ-6MB	2
4	03015922	STAUFF CLAMP, 3/8 TWIN	2
5	03016385	TUBE, HYD 3-STG R O/R LH, EXT	1
6	03016386	TUBE, HYD 3-STG R O/R LH, RET	1
7	0302509	FITTING, ELB 45 DEG	2
8	0307001	HYD. TWIN CYL. ASSY REAR OUTR	1
9	0310707	CYLINDER, SPADE 4BOREx23STROKE	1
10	0400066	SCREW, 1/4-20X3/4 HHC GR5	4
11	0400126	SCREW, 3/8-16X1 HHC GR5	4
12	0400139	SET SCREW, 3/8-16X1-1/2 SOC	3
13	0400392	NUT, 3/8-16 LOK	3
14	0400452	LKWASHER, 1/4	4
15	0400482	LKWASHER, 3/8	4
16	07020905	PLATE, HARDLINE COVER LH	1
17	0703457	SHAFT, JACK CYL UPPER	1
18	0705499	SHAFT, UPPER SPADE	1
19	0707117	SHAFT, UPPER SPADE	1
20	0716141	COVER, OUTER HORIZ OUTRIGGER	1
21	0716644	SPACER, TOP	1
22	0716645	SPACER, BTM	1
23	0721901	PIN - OUTRIGGER TOP	1
24	0721902	PIN - OUTRIGGER BOTTOM	1
25	0804419	2ND STAGE OUTRIGGER BOOM WLD	1
26	0804420	3RD STAGE OUTRIGGER BOOM WLD	1
27	0807635	PAD REAR OUTRIGGER PAD	1
28	0810595	LH REAR 3-STG OUTR O/R WLDT 15	1
29	0906963	PIN - REAR OUTRIGGER PAD ASSY	1

0910571, LH 3-STAGE REAR OUTRIGGER ASSEMBLY

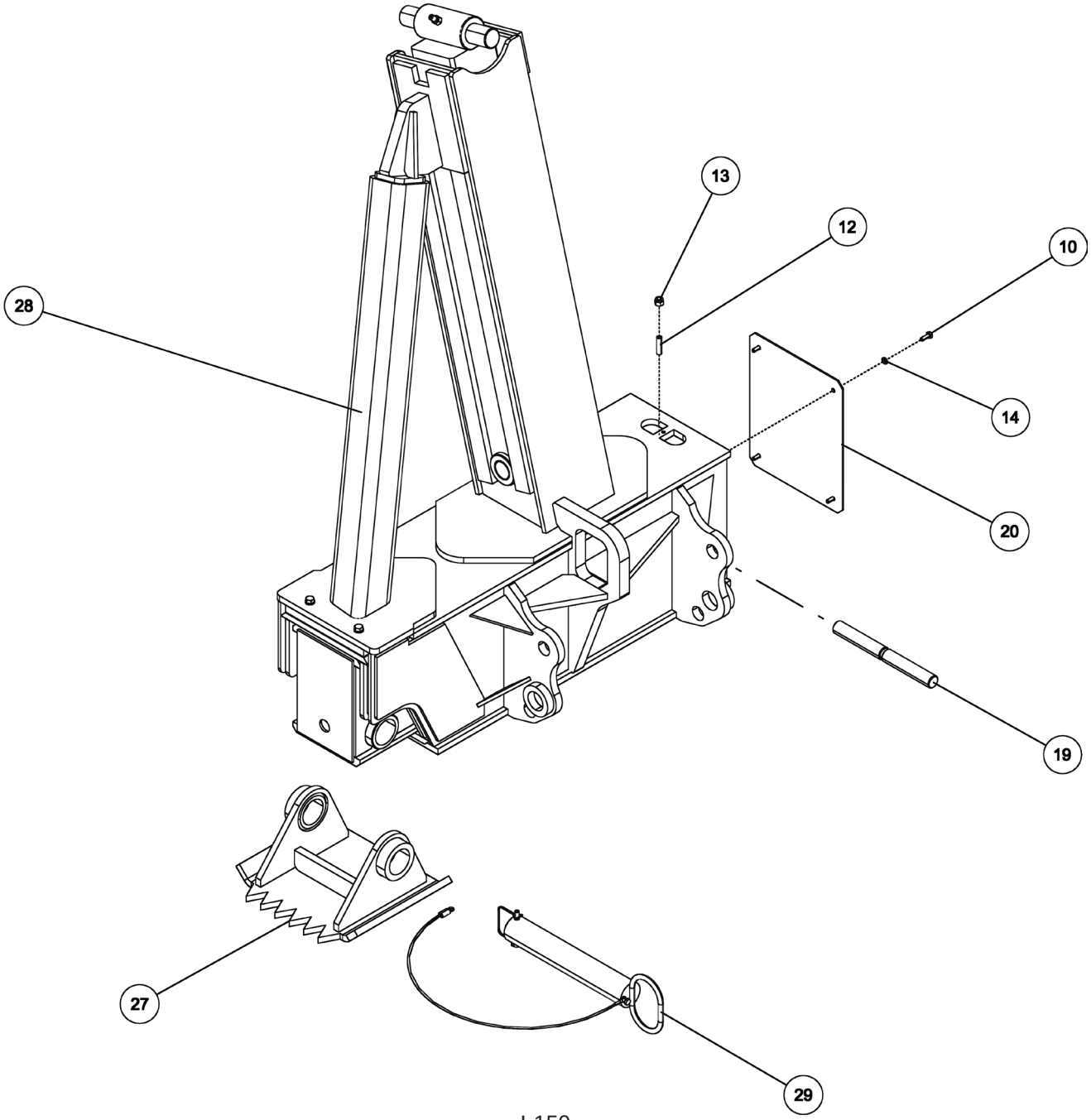

0910571, LH 3-STAGE REAR OUTRIGGER ASSEMBLY

ITEM	PART NUMBER	DESCRIPTION	QTY
	0910571	LH 3-STAGE REAR OUTRIGGER ASSY	-
1	0300110	SNAP RING, 1" 5100-100	4
2	0301422	FITTING, 6MJ-6MJ SMALL	2
3	0301522	ADAPTER, 6MJ-6MB	2
4	03015922	STAUFF CLAMP, 3/8 TWIN	2
5	03016385	TUBE, HYD 3-STG R O/R LH, EXT	1
6	03016386	TUBE, HYD 3-STG R O/R LH, RET	1
7	0302509	FITTING, ELB 45 DEG	2
8	0307001	HYD. TWIN CYL. ASSY REAR OUTR	1
9	0310707	CYLINDER, SPADE 4BOREx23STROKE	1
10	0400066	SCREW, 1/4-20X3/4 HHC GR5	4
11	0400126	SCREW, 3/8-16X1 HHC GR5	4
12	0400139	SET SCREW, 3/8-16X1-1/2 SOC	3
13	0400392	NUT, 3/8-16 LOK	3
14	0400452	LKWASHER, 1/4	4
15	0400482	LKWASHER, 3/8	4
16	07020905	PLATE, HARDLINE COVER LH	1
17	0703457	SHAFT, JACK CYL UPPER	1
18	0705499	SHAFT, UPPER SPADE	1
19	0707117	SHAFT, UPPER SPADE	1
20	0716141	COVER, OUTER HORIZ OUTRIGGER	1
21	0716644	SPACER, TOP	1
22	0716645	SPACER, BTM	1
23	0721901	PIN - OUTRIGGER TOP	1
24	0721902	PIN - OUTRIGGER BOTTOM	1
25	0804419	2ND STAGE OUTRIGGER BOOM WLD	1
26	0804420	3RD STAGE OUTRIGGER BOOM WLD	1
27	0807635	PAD REAR OUTRIGGER PAD	1
28	0810595	LH REAR 3-STG OUTR O/R WLDT 15	1
29	0906963	PIN - REAR OUTRIGGER PAD ASSY	1

0910571, LH 3-STAGE REAR OUTRIGGER ASSEMBLY

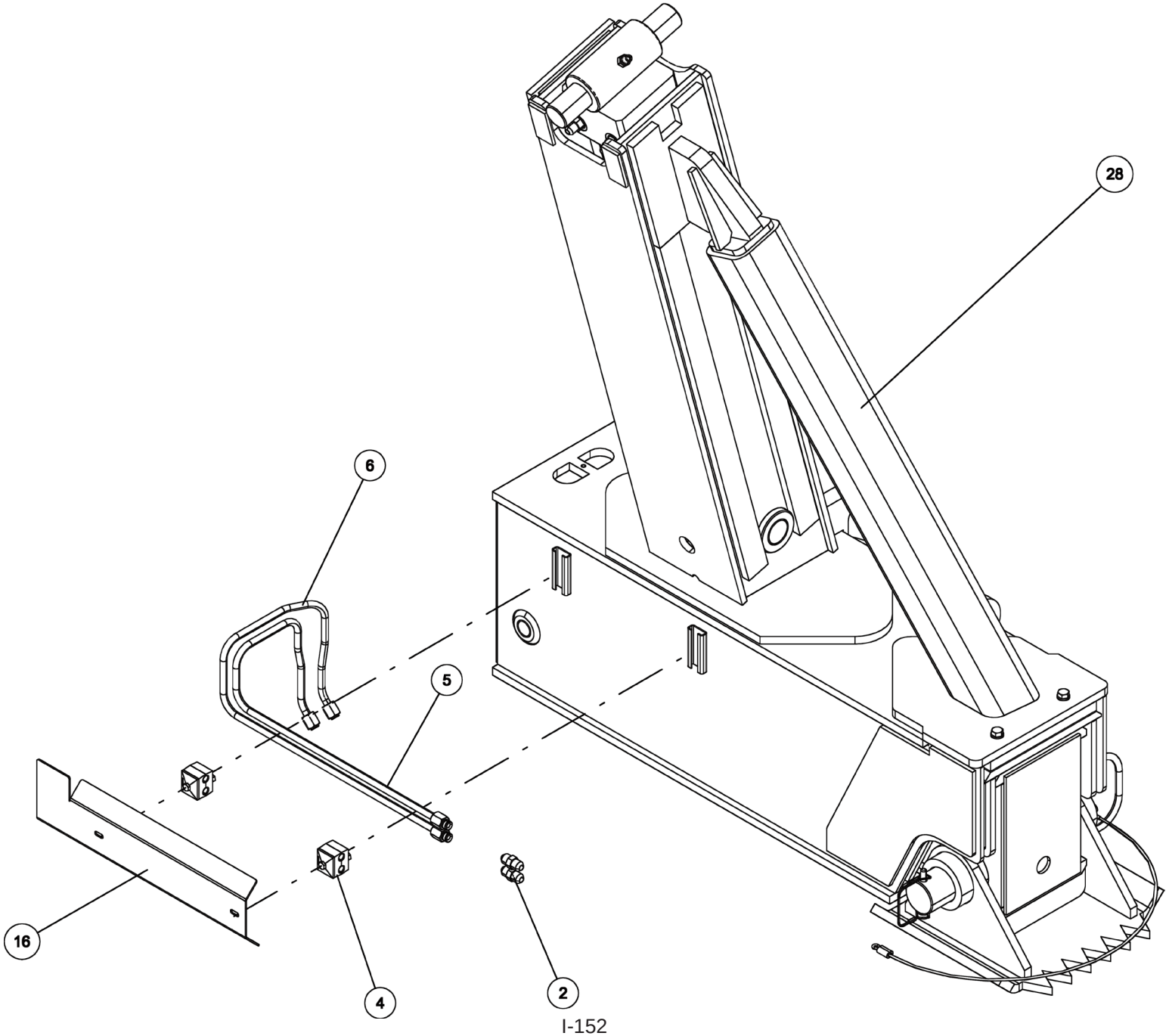

0910571, LH 3-STAGE REAR OUTRIGGER ASSEMBLY

ITEM	PART NUMBER	DESCRIPTION	QTY
	0910571	LH 3-STAGE REAR OUTRIGGER ASSY	-
1	0300110	SNAP RING, 1" 5100-100	4
2	0301422	FITTING, 6MJ-6MJ SMALL	2
3	0301522	ADAPTER, 6MJ-6MB	2
4	03015922	STAUFF CLAMP, 3/8 TWIN	2
5	03016385	TUBE, HYD 3-STG R O/R LH, EXT	1
6	03016386	TUBE, HYD 3-STG R O/R LH, RET	1
7	0302509	FITTING, ELB 45 DEG	2
8	0307001	HYD. TWIN CYL. ASSY REAR OUTR	1
9	0310707	CYLINDER, SPADE 4BOREx23STROKE	1
10	0400066	SCREW, 1/4-20X3/4 HHC GR5	4
11	0400126	SCREW, 3/8-16X1 HHC GR5	4
12	0400139	SET SCREW, 3/8-16X1-1/2 SOC	3
13	0400392	NUT, 3/8-16 LOK	3
14	0400452	LKWASHER, 1/4	4
15	0400482	LKWASHER, 3/8	4
16	07020905	PLATE, HARDLINE COVER LH	1
17	0703457	SHAFT, JACK CYL UPPER	1
18	0705499	SHAFT, UPPER SPADE	1
19	0707117	SHAFT, UPPER SPADE	1
20	0716141	COVER, OUTER HORIZ OUTRIGGER	1
21	0716644	SPACER, TOP	1
22	0716645	SPACER, BTM	1
23	0721901	PIN - OUTRIGGER TOP	1
24	0721902	PIN - OUTRIGGER BOTTOM	1
25	0804419	2ND STAGE OUTRIGGER BOOM WLD	1
26	0804420	3RD STAGE OUTRIGGER BOOM WLD	1
27	0807635	PAD REAR OUTRIGGER PAD	1
28	0810595	LH REAR 3-STG OUTR O/R WLDT 15	1
29	0906963	PIN - REAR OUTRIGGER PAD ASSY	1

0910572, RH 3-STAGE REAR OUTRIGGER ASSEMBLY

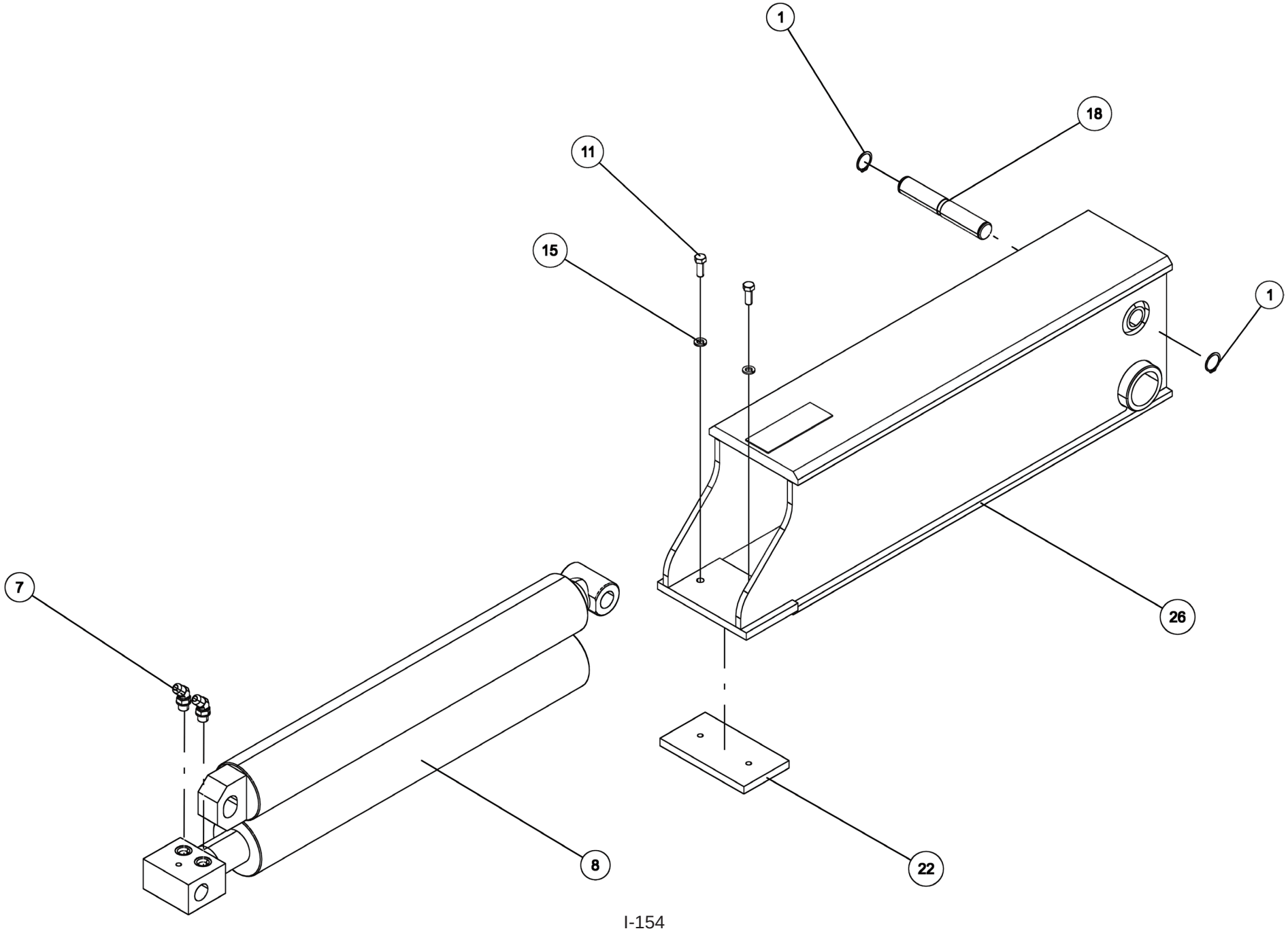

0910572, RH 3-STAGE REAR OUTRIGGER ASSEMBLY

ITEM	PART NUMBER	DESCRIPTION	QTY
	0910572	RH 3-STAGE REAR OUTRIGGER ASSY	-
1	0300110	SNAP RING, 1" 5100-100	4
2	0301422	FITTING, 6MJ-6MJ SMALL	2
3	0301522	ADAPTER, 6MJ-6MB	2
4	03015922	STAUFF CLAMP, 3/8 TWIN	2
5	03016383	TUBE, HYD 3-STG R O/R RH, RET	1
6	03016384	TUBE, HYD 3-STG R O/R RH, EXT	1
7	0302509	FITTING, ELB 45 DEG	2
8	0307001	HYD. TWIN CYL. ASSY REAR OUTR	1
9	0310707	CYLINDER, SPADE 4BOREx23STROKE	1
10	0400066	SCREW, 1/4-20X3/4 HHC GR5	4
11	0400126	SCREW, 3/8-16X1 HHC GR5	4
12	0400139	SET SCREW, 3/8-16X1-1/2 SOC	3
13	0400392	NUT, 3/8-16 LOK	3
14	0400452	LKWASHER, 1/4	4
15	0400482	LKWASHER, 3/8	4
16	07020904	PLATE, HARDLINE COVER RH	1
17	0703457	SHAFT, JACK CYL UPPER	1
18	0705499	SHAFT, UPPER SPADE	1
19	0707117	SHAFT, UPPER SPADE	1
20	0716141	COVER, OUTER HORIZ OUTRIGGER	1
21	0716644	SPACER, TOP	1
22	0716645	SPACER, BTM	1
23	0721901	PIN - OUTRIGGER TOP	1
24	0721902	PIN - OUTRIGGER BOTTOM	1
25	0804419	2ND STAGE OUTRIGGER BOOM WLD	1
26	0804420	3RD STAGE OUTRIGGER BOOM WLD	1
27	0807635	PAD REAR OUTRIGGER PAD	1
28	0810596	RH REAR 3-STG OUTR O/R WLDT 15	1
29	0906963	PIN - REAR OUTRIGGER PAD ASSY	1

0910572, RH 3-STAGE REAR OUTRIGGER ASSEMBLY

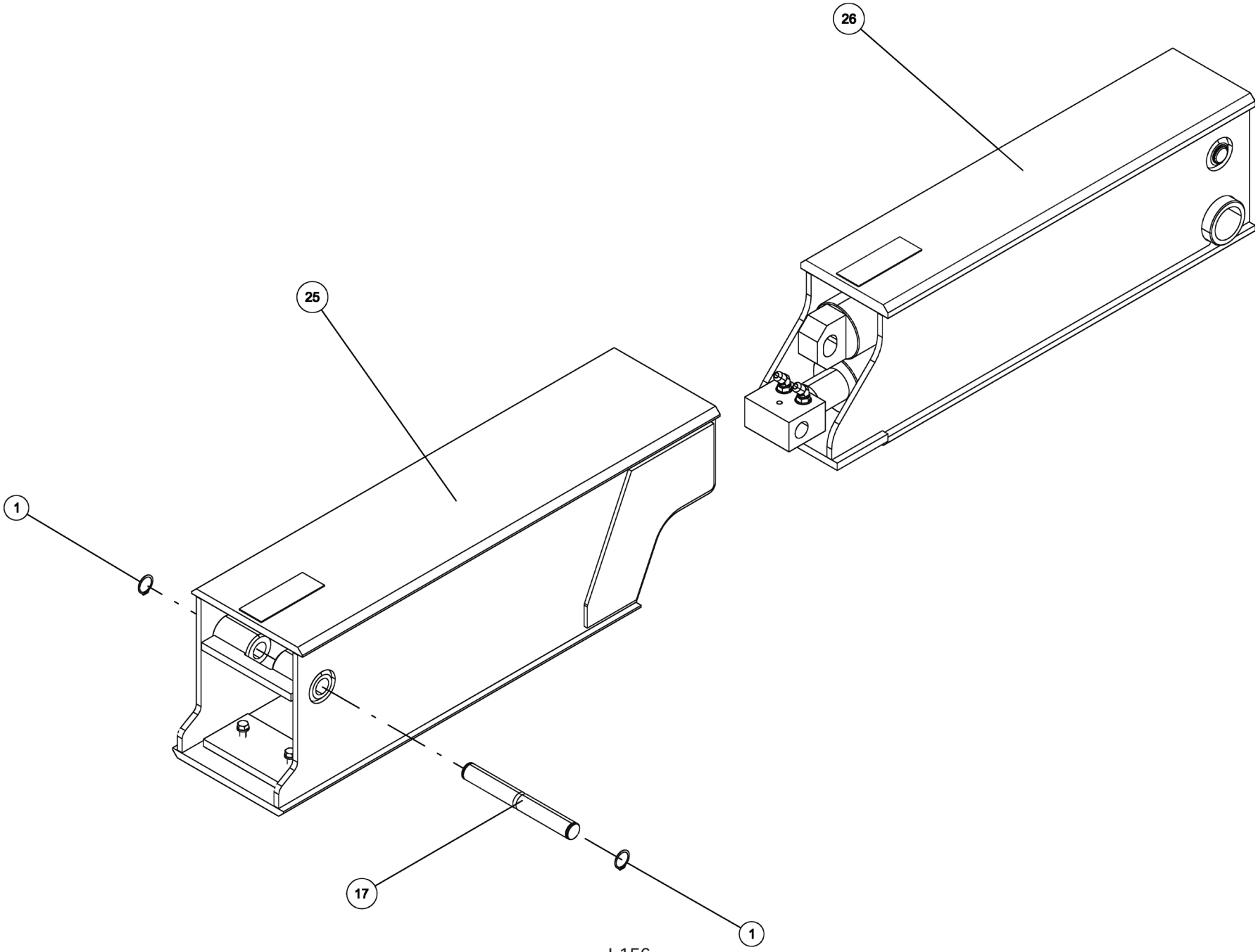

0910572, RH 3-STAGE REAR OUTRIGGER ASSEMBLY

ITEM	PART NUMBER	DESCRIPTION	QTY
	0910572	RH 3-STAGE REAR OUTRIGGER ASSY	-
1	0300110	SNAP RING, 1" 5100-100	4
2	0301422	FITTING, 6MJ-6MJ SMALL	2
3	0301522	ADAPTER, 6MJ-6MB	2
4	03015922	STAUFF CLAMP, 3/8 TWIN	2
5	03016383	TUBE, HYD 3-STG R O/R RH, RET	1
6	03016384	TUBE, HYD 3-STG R O/R RH, EXT	1
7	0302509	FITTING, ELB 45 DEG	2
8	0307001	HYD. TWIN CYL. ASSY REAR OUTR	1
9	0310707	CYLINDER, SPADE 4BOREx23STROKE	1
10	0400066	SCREW, 1/4-20X3/4 HHC GR5	4
11	0400126	SCREW, 3/8-16X1 HHC GR5	4
12	0400139	SET SCREW, 3/8-16X1-1/2 SOC	3
13	0400392	NUT, 3/8-16 LOK	3
14	0400452	LKWASHER, 1/4	4
15	0400482	LKWASHER, 3/8	4
16	07020904	PLATE, HARDLINE COVER RH	1
17	0703457	SHAFT, JACK CYL UPPER	1
18	0705499	SHAFT, UPPER SPADE	1
19	0707117	SHAFT, UPPER SPADE	1
20	0716141	COVER, OUTER HORIZ OUTRIGGER	1
21	0716644	SPACER, TOP	1
22	0716645	SPACER, BTM	1
23	0721901	PIN - OUTRIGGER TOP	1
24	0721902	PIN - OUTRIGGER BOTTOM	1
25	0804419	2ND STAGE OUTRIGGER BOOM WLD	1
26	0804420	3RD STAGE OUTRIGGER BOOM WLD	1
27	0807635	PAD REAR OUTRIGGER PAD	1
28	0810596	RH REAR 3-STG OUTR O/R WLDT 15	1
29	0906963	PIN - REAR OUTRIGGER PAD ASSY	1

0910572, RH 3-STAGE REAR OUTRIGGER ASSEMBLY

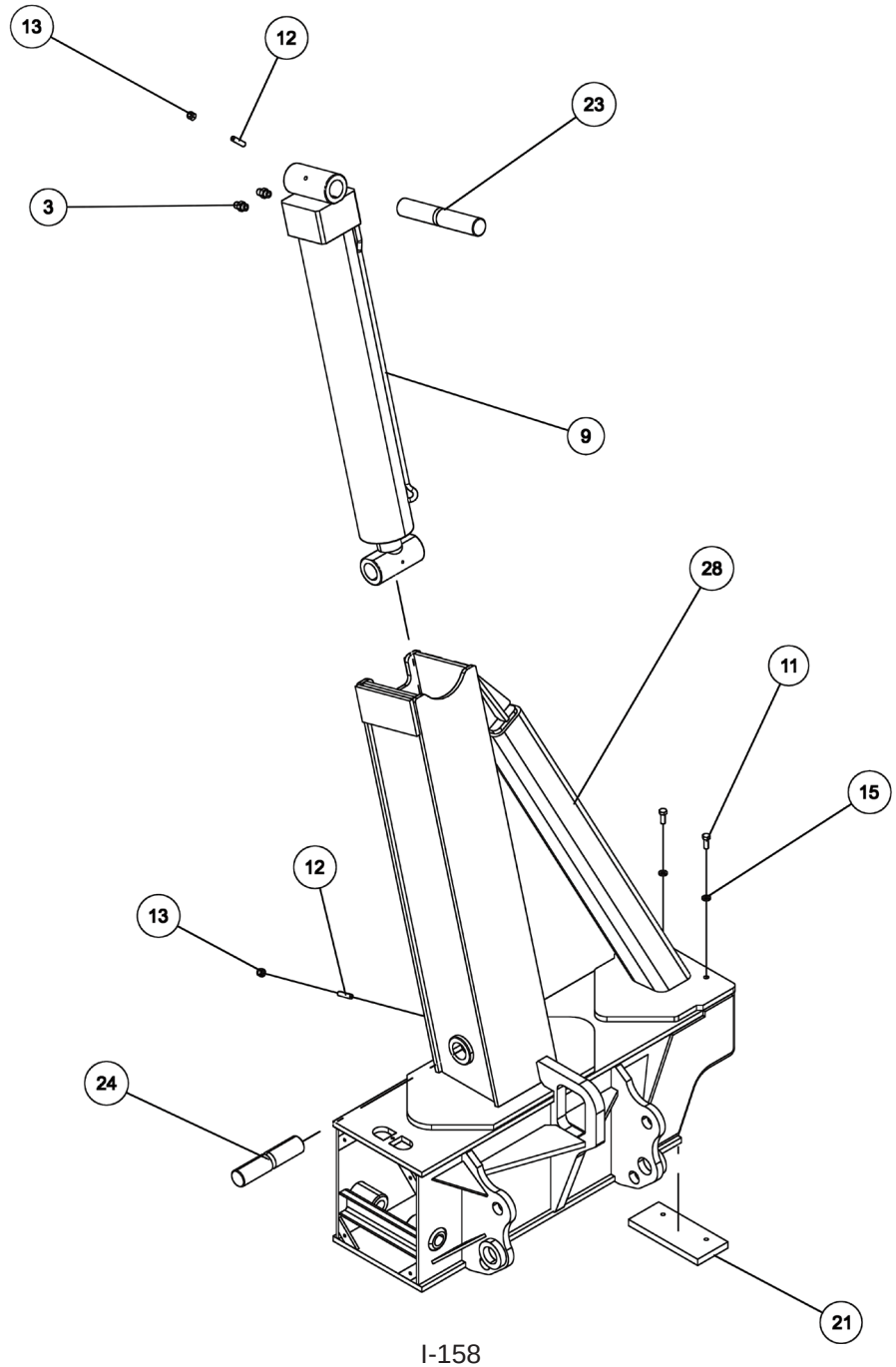

0910572, RH 3-STAGE REAR OUTRIGGER ASSEMBLY

ITEM	PART NUMBER	DESCRIPTION	QTY
	0910572	RH 3-STAGE REAR OUTRIGGER ASSY	-
1	0300110	SNAP RING, 1" 5100-100	4
2	0301422	FITTING, 6MJ-6MJ SMALL	2
3	0301522	ADAPTER, 6MJ-6MB	2
4	03015922	STAUFF CLAMP, 3/8 TWIN	2
5	03016383	TUBE, HYD 3-STG R O/R RH, RET	1
6	03016384	TUBE, HYD 3-STG R O/R RH, EXT	1
7	0302509	FITTING, ELB 45 DEG	2
8	0307001	HYD. TWIN CYL. ASSY REAR OUTR	1
9	0310707	CYLINDER, SPADE 4BOREx23STROKE	1
10	0400066	SCREW, 1/4-20X3/4 HHC GR5	4
11	0400126	SCREW, 3/8-16X1 HHC GR5	4
12	0400139	SET SCREW, 3/8-16X1-1/2 SOC	3
13	0400392	NUT, 3/8-16 LOK	3
14	0400452	LKWASHER, 1/4	4
15	0400482	LKWASHER, 3/8	4
16	07020904	PLATE, HARDLINE COVER RH	1
17	0703457	SHAFT, JACK CYL UPPER	1
18	0705499	SHAFT, UPPER SPADE	1
19	0707117	SHAFT, UPPER SPADE	1
20	0716141	COVER, OUTER HORIZ OUTRIGGER	1
21	0716644	SPACER, TOP	1
22	0716645	SPACER, BTM	1
23	0721901	PIN - OUTRIGGER TOP	1
24	0721902	PIN - OUTRIGGER BOTTOM	1
25	0804419	2ND STAGE OUTRIGGER BOOM WLD	1
26	0804420	3RD STAGE OUTRIGGER BOOM WLD	1
27	0807635	PAD REAR OUTRIGGER PAD	1
28	0810596	RH REAR 3-STG OUTR O/R WLDT 15	1
29	0906963	PIN - REAR OUTRIGGER PAD ASSY	1

0910572, RH 3-STAGE REAR OUTRIGGER ASSEMBLY

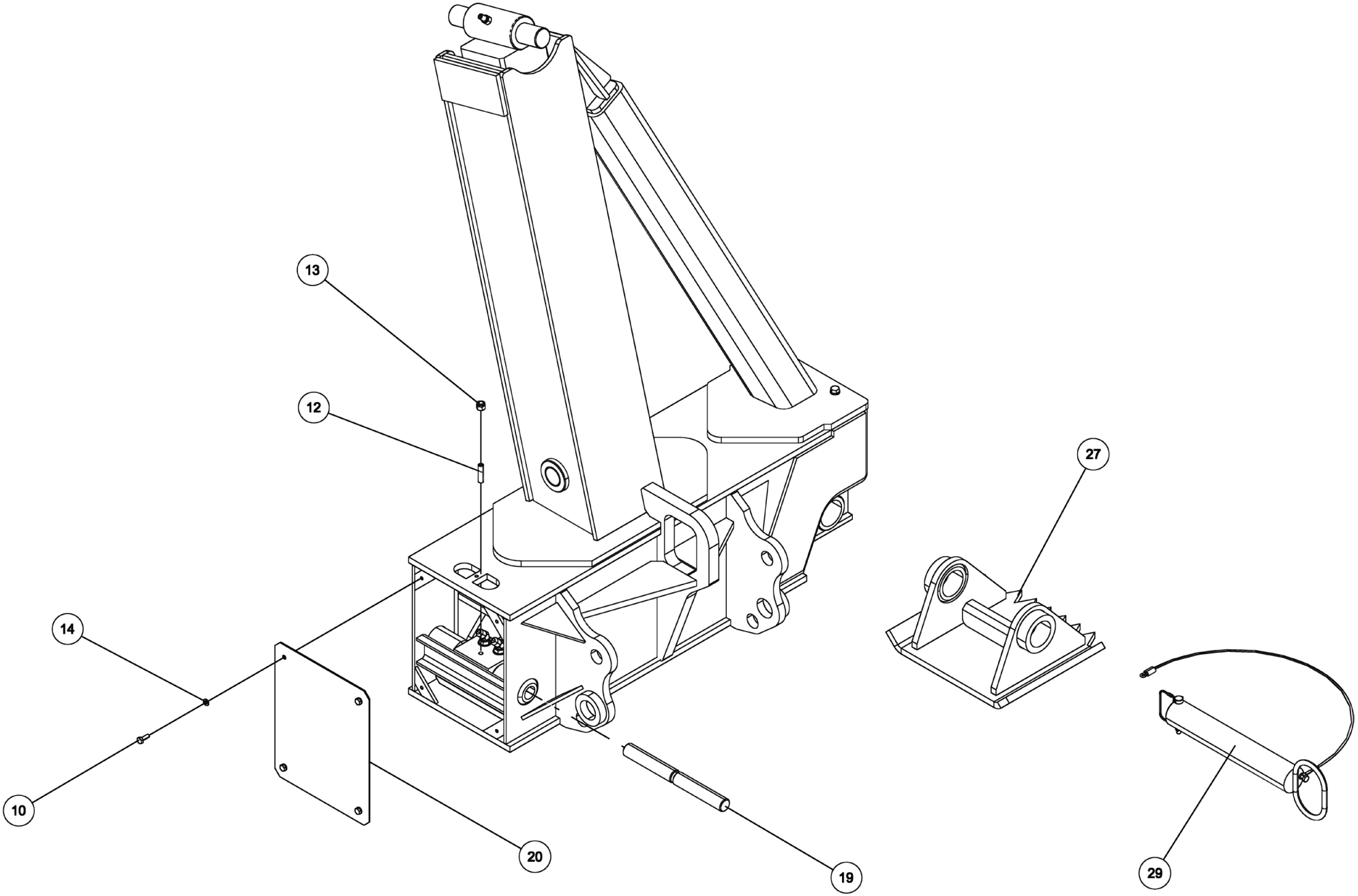

0910572, RH 3-STAGE REAR OUTRIGGER ASSEMBLY

ITEM	PART NUMBER	DESCRIPTION	QTY
	0910572	RH 3-STAGE REAR OUTRIGGER ASSY	-
1	0300110	SNAP RING, 1" 5100-100	4
2	0301422	FITTING, 6MJ-6MJ SMALL	2
3	0301522	ADAPTER, 6MJ-6MB	2
4	03015922	STAUFF CLAMP, 3/8 TWIN	2
5	03016383	TUBE, HYD 3-STG R O/R RH, RET	1
6	03016384	TUBE, HYD 3-STG R O/R RH, EXT	1
7	0302509	FITTING, ELB 45 DEG	2
8	0307001	HYD. TWIN CYL. ASSY REAR OUTR	1
9	0310707	CYLINDER, SPADE 4BOREx23STROKE	1
10	0400066	SCREW, 1/4-20X3/4 HHC GR5	4
11	0400126	SCREW, 3/8-16X1 HHC GR5	4
12	0400139	SET SCREW, 3/8-16X1-1/2 SOC	3
13	0400392	NUT, 3/8-16 LOK	3
14	0400452	LKWASHER, 1/4	4
15	0400482	LKWASHER, 3/8	4
16	07020904	PLATE, HARDLINE COVER RH	1
17	0703457	SHAFT, JACK CYL UPPER	1
18	0705499	SHAFT, UPPER SPADE	1
19	0707117	SHAFT, UPPER SPADE	1
20	0716141	COVER, OUTER HORIZ OUTRIGGER	1
21	0716644	SPACER, TOP	1
22	0716645	SPACER, BTM	1
23	0721901	PIN - OUTRIGGER TOP	1
24	0721902	PIN - OUTRIGGER BOTTOM	1
25	0804419	2ND STAGE OUTRIGGER BOOM WLD	1
26	0804420	3RD STAGE OUTRIGGER BOOM WLD	1
27	0807635	PAD REAR OUTRIGGER PAD	1
28	0810596	RH REAR 3-STG OUTR O/R WLDT 15	1
29	0906963	PIN - REAR OUTRIGGER PAD ASSY	1

0910572, RH 3-STAGE REAR OUTRIGGER ASSEMBLY

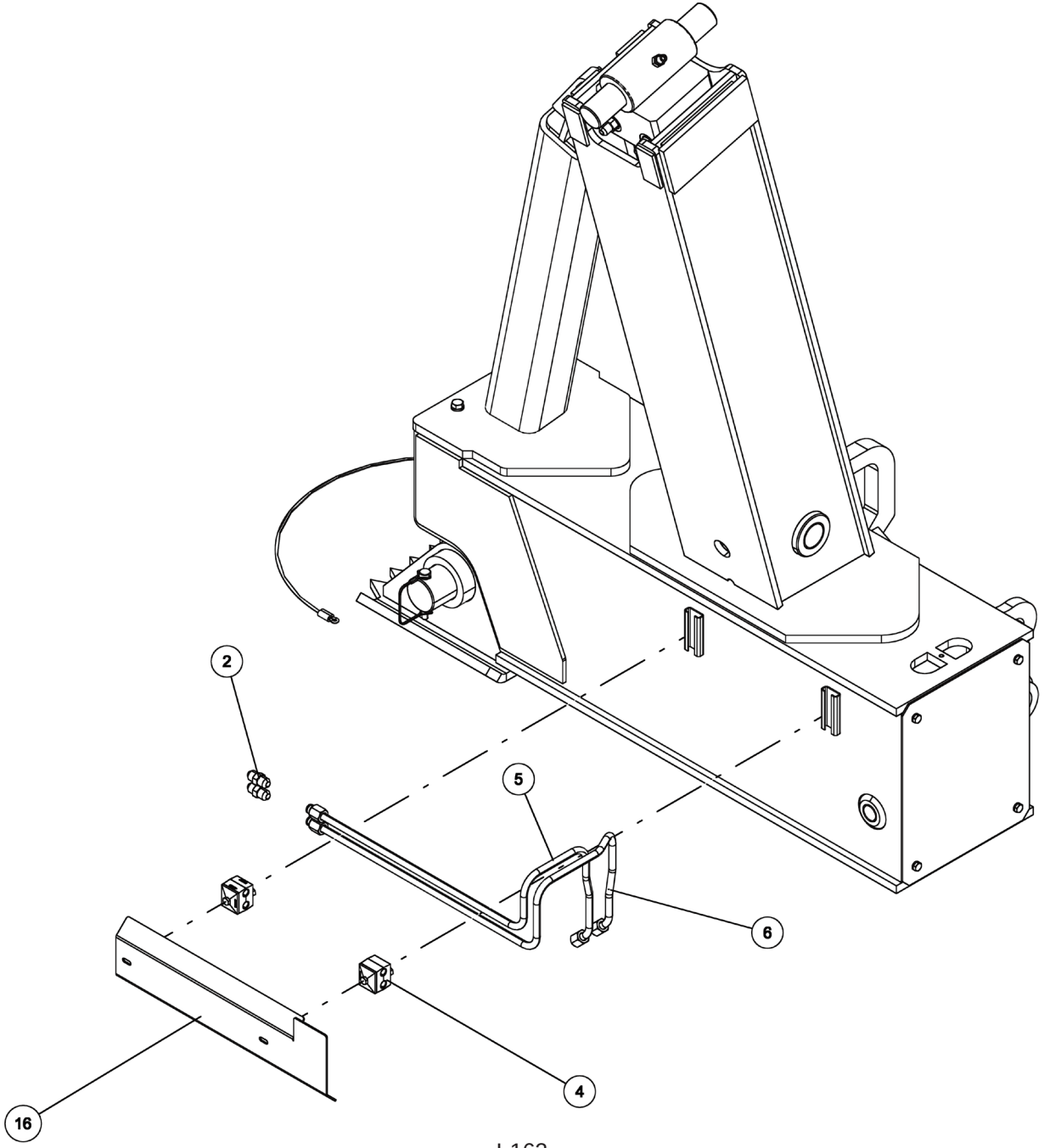

0910572, RH 3-STAGE REAR OUTRIGGER ASSEMBLY

ITEM	PART NUMBER	DESCRIPTION	QTY
	0910572	RH 3-STAGE REAR OUTRIGGER ASSY	-
1	0300110	SNAP RING, 1" 5100-100	4
2	0301422	FITTING, 6MJ-6MJ SMALL	2
3	0301522	ADAPTER, 6MJ-6MB	2
4	03015922	STAUFF CLAMP, 3/8 TWIN	2
5	03016383	TUBE, HYD 3-STG R O/R RH, RET	1
6	03016384	TUBE, HYD 3-STG R O/R RH, EXT	1
7	0302509	FITTING, ELB 45 DEG	2
8	0307001	HYD. TWIN CYL. ASSY REAR OUTR	1
9	0310707	CYLINDER, SPADE 4BOREx23STROKE	1
10	0400066	SCREW, 1/4-20X3/4 HHC GR5	4
11	0400126	SCREW, 3/8-16X1 HHC GR5	4
12	0400139	SET SCREW, 3/8-16X1-1/2 SOC	3
13	0400392	NUT, 3/8-16 LOK	3
14	0400452	LKWASHER, 1/4	4
15	0400482	LKWASHER, 3/8	4
16	07020904	PLATE, HARDLINE COVER RH	1
17	0703457	SHAFT, JACK CYL UPPER	1
18	0705499	SHAFT, UPPER SPADE	1
19	0707117	SHAFT, UPPER SPADE	1
20	0716141	COVER, OUTER HORIZ OUTRIGGER	1
21	0716644	SPACER, TOP	1
22	0716645	SPACER, BTM	1
23	0721901	PIN - OUTRIGGER TOP	1
24	0721902	PIN - OUTRIGGER BOTTOM	1
25	0804419	2ND STAGE OUTRIGGER BOOM WLD	1
26	0804420	3RD STAGE OUTRIGGER BOOM WLD	1
27	0807635	PAD REAR OUTRIGGER PAD	1
28	0810596	RH REAR 3-STG OUTR O/R WLDT 15	1
29	0906963	PIN - REAR OUTRIGGER PAD ASSY	1

0911167, SPADE ASSEMBLY

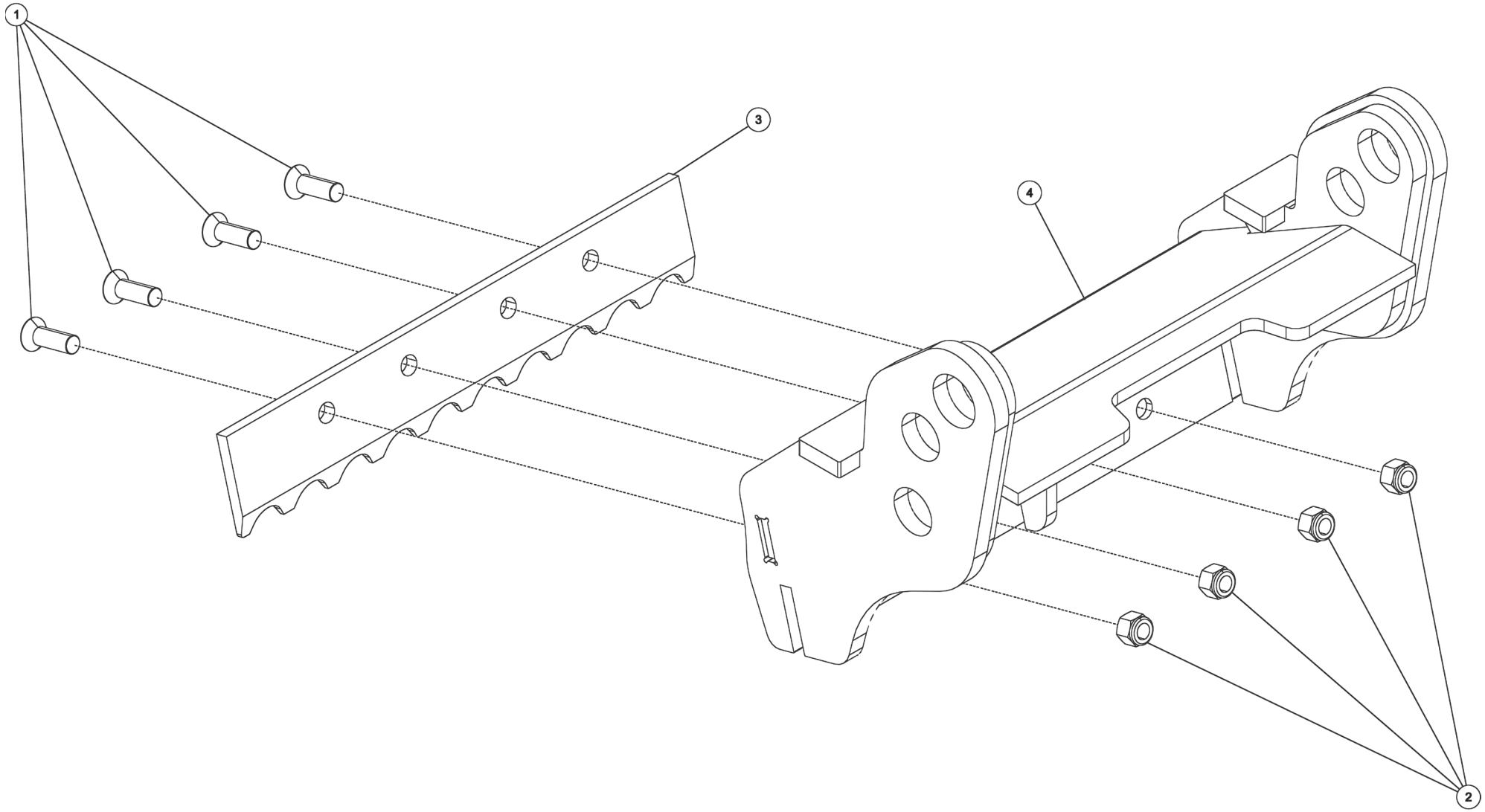

0911167, SPADE ASSEMBLY

ITEM	PART NUMBER	DESCRIPTION	QTY
	0911167	SPADE ASSY - REAR OUTRIGGER	-
1	0400193	SCREW, 1/2-13X1-1/2 FHS	4
2	0400416	NUT, 1/2-13 LOK GR8	4
3	0724616	PLATE BLADE SPADE	1
4	0810034	SPADE - REAR OUTRIGGERS	1

0910615, OUTRIGGER CONTROL VALVE KIT

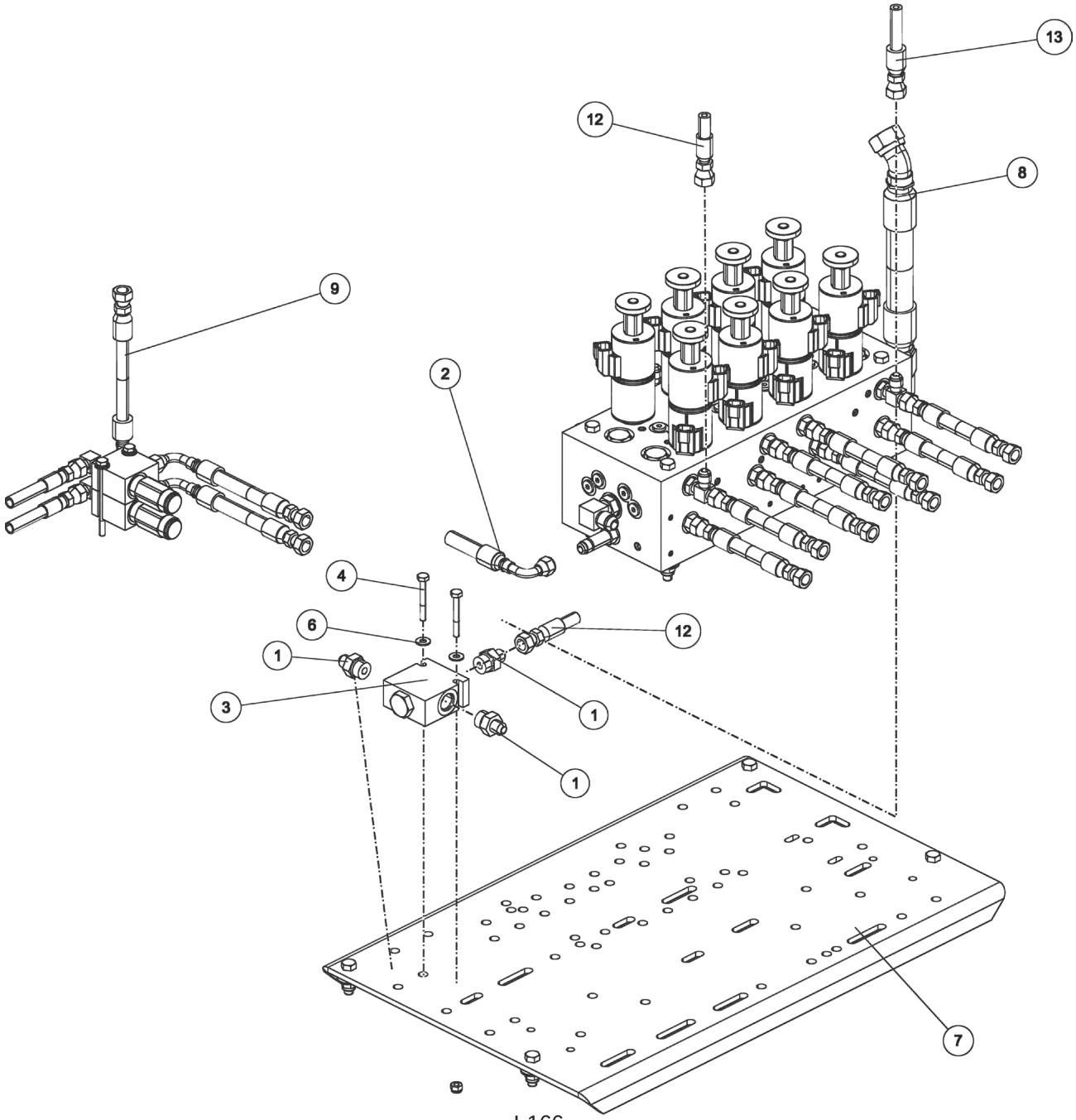

0910615, OUTRIGGER CONTROL VALVE KIT

ITEM	PART NUMBER	DESCRIPTION	QTY
	0910615	OUTRIGGER CONT VALVE KIT	-
1	0300044	FITT, HYD CONN. 6MJ-8MB	3
2	0301473	HOSE HYD, 18" LG	1
3	0302000	HOSE HYD, 24"	1
4	0310406	VALVE, SHUTTLE LS10-30-8T-N	1
5	0310500	HARNESS - OUTRIGGER WIRING	1
6	0400078	SCREW, 1/4-20X2 HHC GR5	2
7	0400367	NUT, 1/4-20 LOK	2
8	0400451	WASHER, 1/4	2
9	0910616	OUTRIGGER CONT VALVE KIT	1
10	0910635	OUTRIGGER BLEED VALVE ASSY	1
11	0910915	KIT, FRONT VALVE MOUNTING	1

0910616, OUTRIGGER CONTROL VALVE KIT

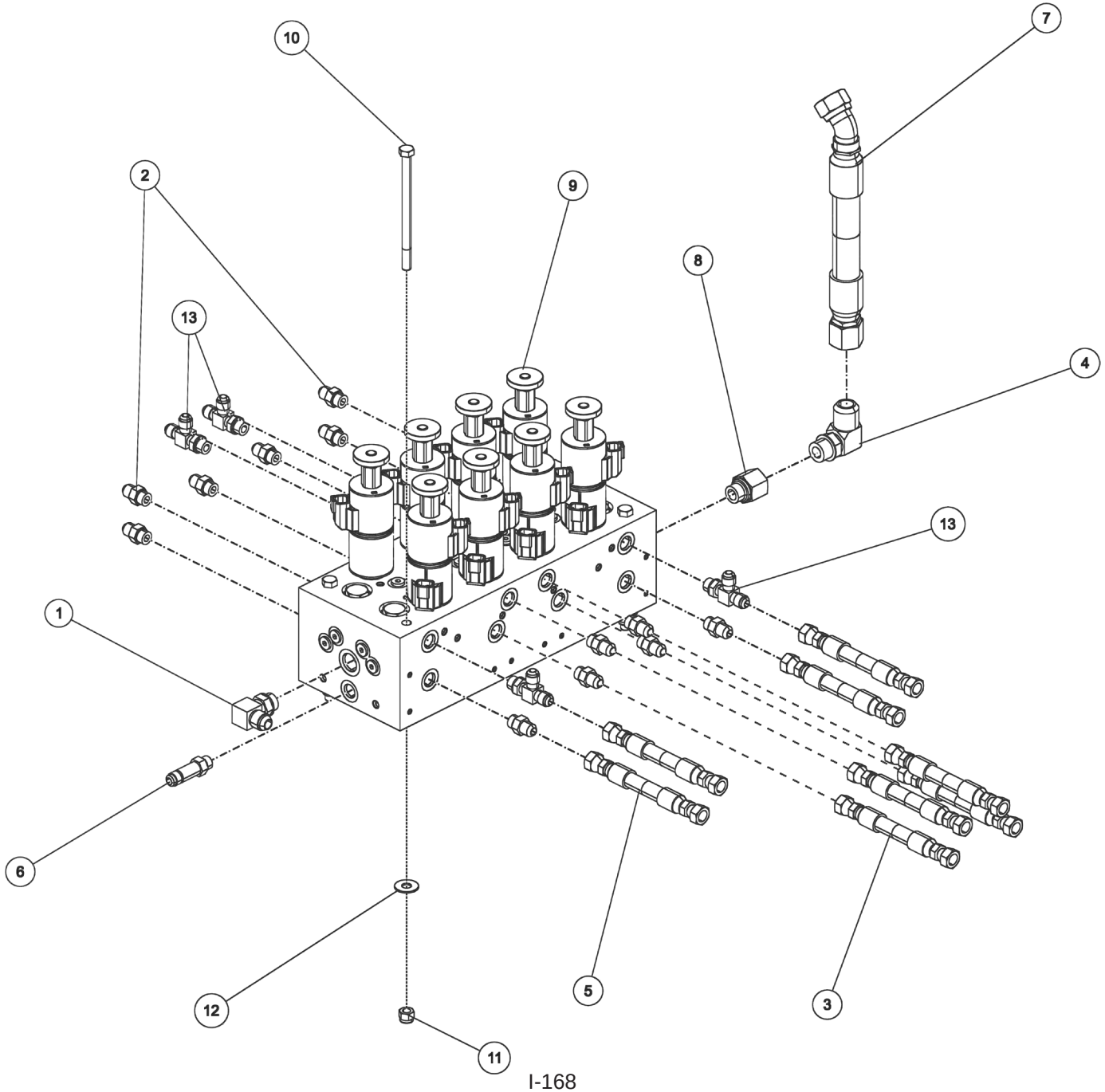

0910616, OUTRIGGER CONTROL VALVE KIT

ITEM	PART NUMBER	DESCRIPTION	QTY
	0910616	OUTRIGGER CONT VALVE KIT	-
1	0301388	ELBOW, 8MJ-8MB90	1
2	0301522	ADAPTER, 6MJ-6MB	12
3	0302056	HOSE HYD, 183"	4
4	0302085	FITTING, 90 DEG ADPTR	1
5	0302372	HOSE HYD, 240" LG	4
6	0302510	ADAPTER, 6MJ-6MBL	1
7	0303339	HOSE HYD, 45" LG	1
8	0306633	FITTING, 8MB-10FB	1
9	0310358	VALVE,SOLENOID 12V OUTRIG CTRL	1
10	0400143	SCREW, 3/8-16X5-1/2 HHC GR5	4
11	0400392	NUT, 3/8-16 LOK	4
12	0400480	WASHER, 3/8	4
13	9012594	FITT,HYD RUN TEE, 6MJx6MBx6MJ	4

0910635, OUTRIGGER BLEED VALVE ASSEMBLY

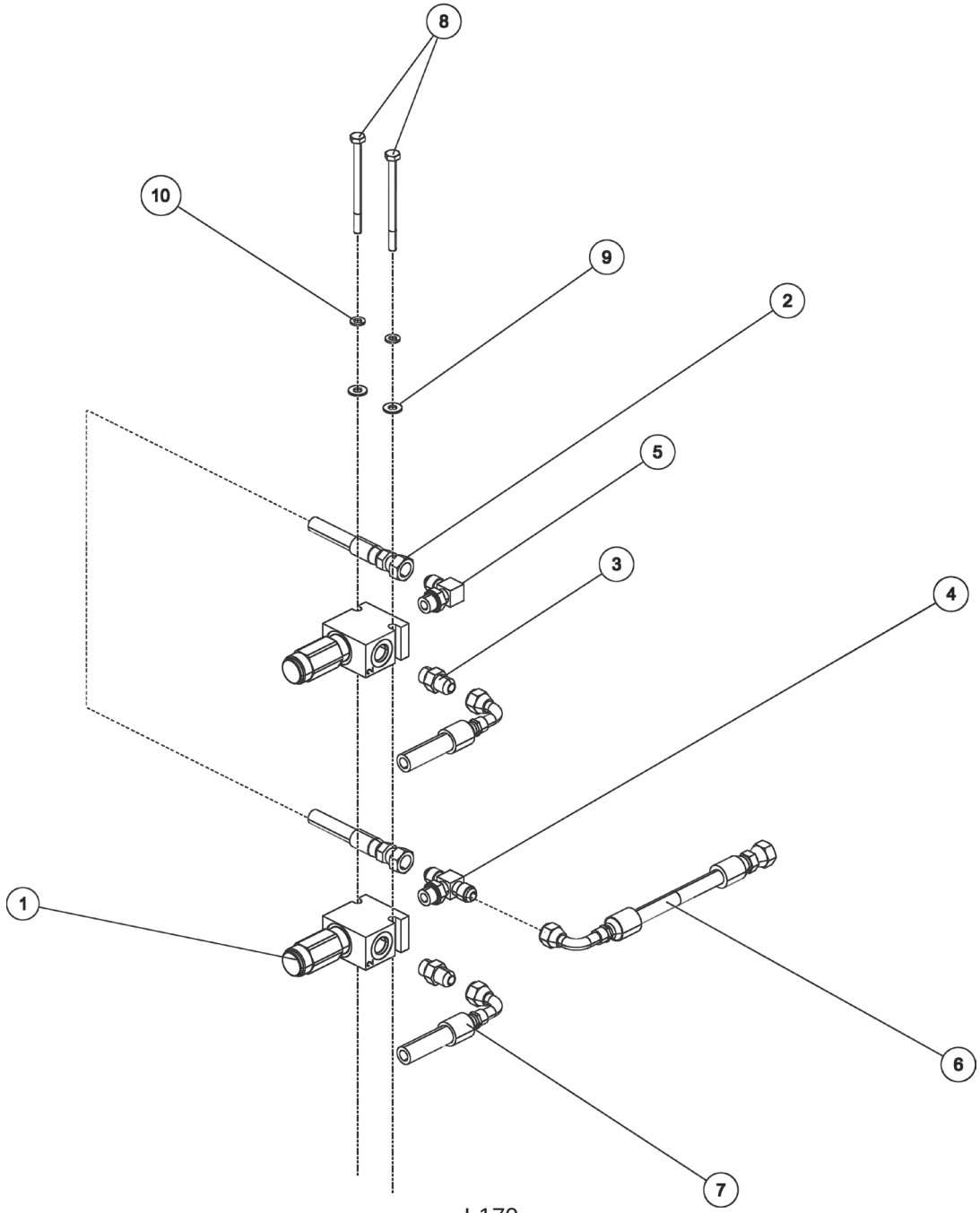

0910635, OUTRIGGER BLEED VALVE ASSEMBLY

ITEM	PART NUMBER	DESCRIPTION	QTY
	0910635	OUTRIGGER BLEED VALVE ASSY	-
1	03000389	RELIEF VALVE, WALVOIL RV08	2
2	0301427	HOSE HYD, 11" 5000 PSI	1
3	0301522	ADAPTER, 6MJ-6MB	2
4	0301619	FITT, 6MJ-6MJ-6MB BRANCH TEE	1
5	0301620	FITTING, HYD. 6MJ - 6MB90	1
6	0302881	HOSE HYD, 45"	1
7	0302926	HOSE HYD, 29" LONG	1
8	0400081	SCREW, 1/4-20X3-1/2 HHC GR5	2
9	0400451	WASHER, 1/4	2
10	0400452	LKWASHER, 1/4	2

0910915, FRONT VALVE MOUNTING

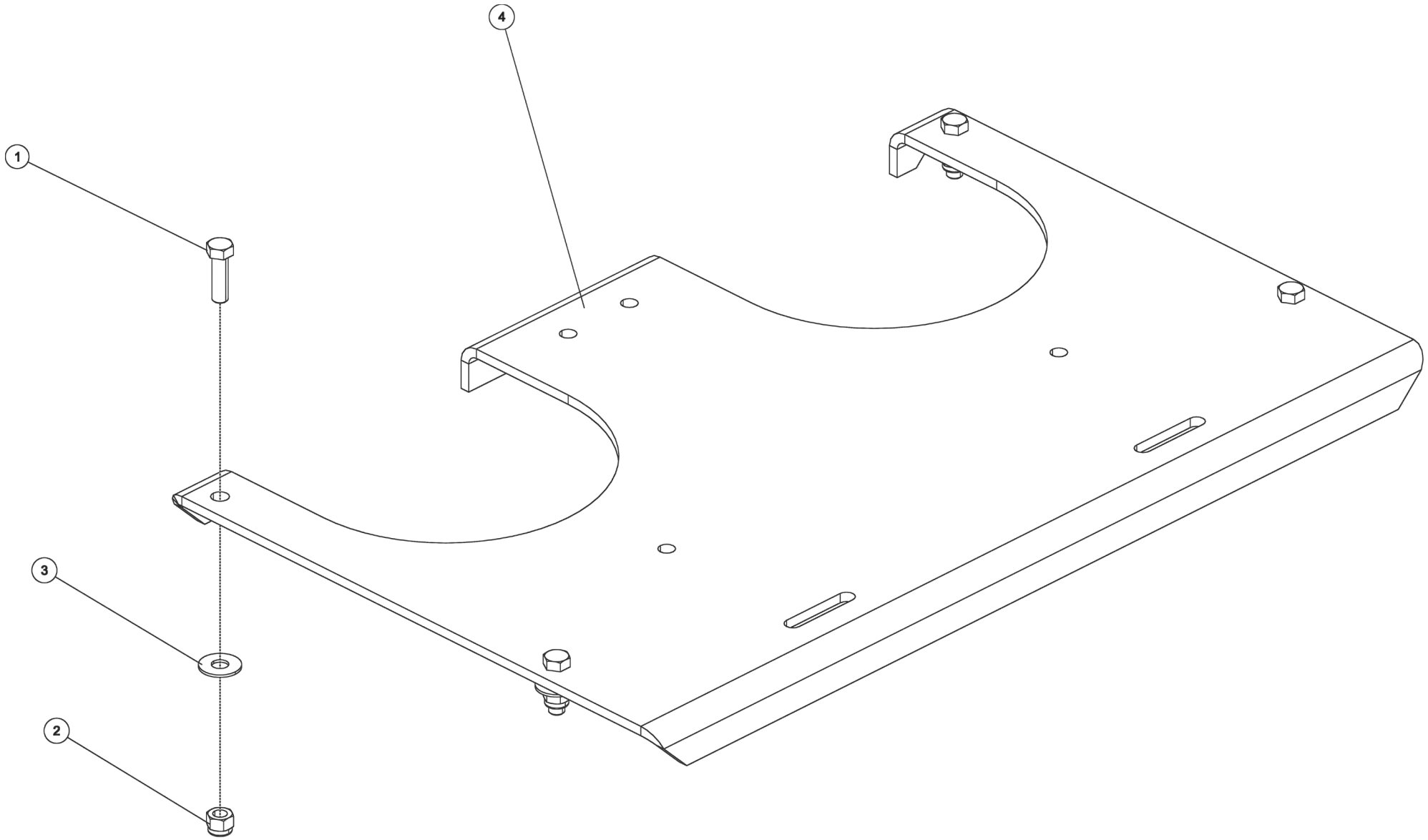

0910915, FRONT VALVE MOUNTING

ITEM	PART NUMBER	DESCRIPTION	QTY
	0910915	KIT, FRONT VALVE MOUNTING	-
1	0400122	SCREW, 3/8-16X1-1/4 HHC GR5	4
2	0400392	NUT, 3/8-16 LOK	4
3	0400480	WASHER, 3/8	4
4	0723933	PLATE - FRONT VALVE MOUNTING	1

0910935, CROSSBAR XHD 5X5 ASSEMBLY

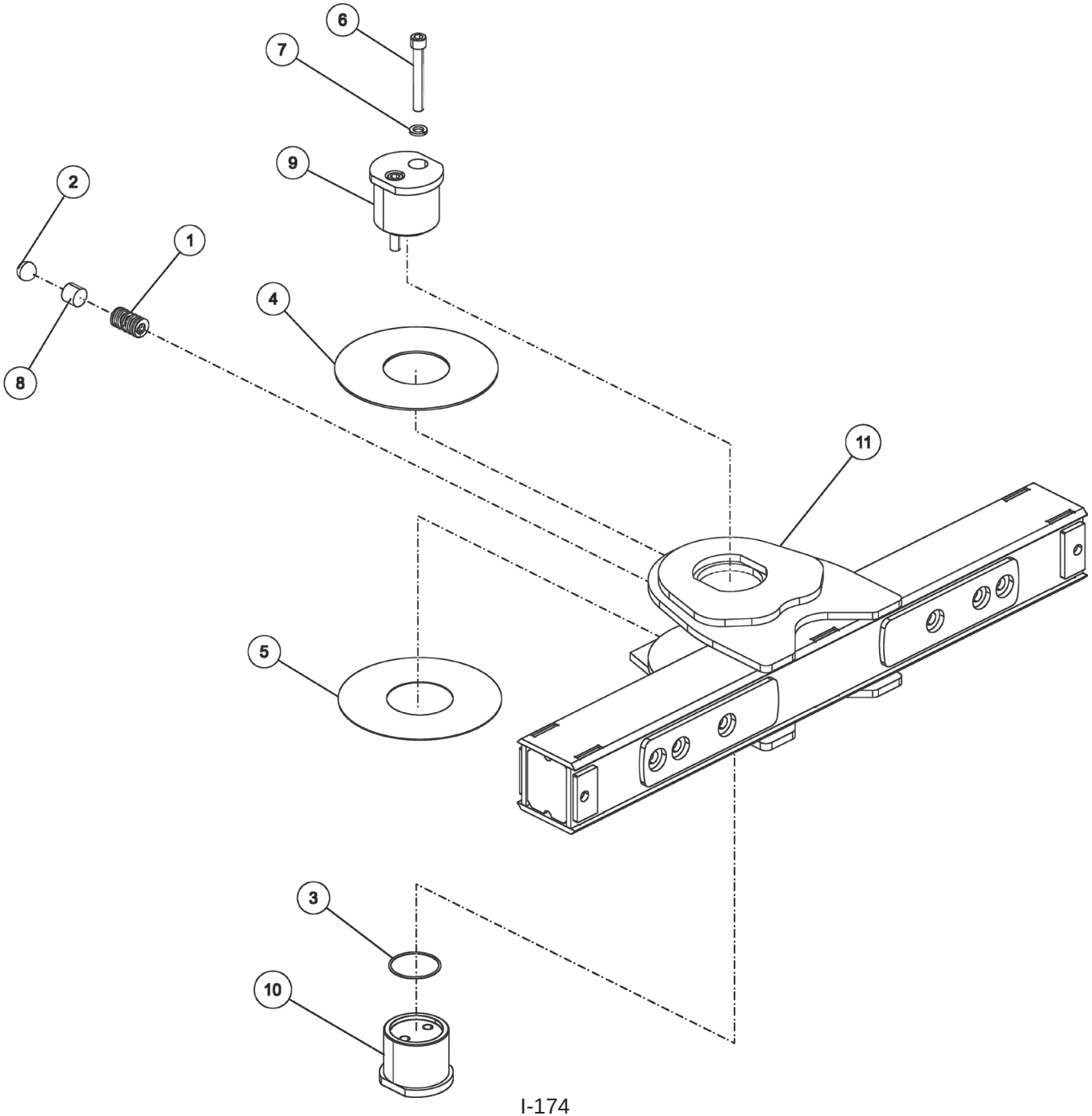

0910935, CROSSBAR XHD 5X5 ASSEMBLY

ITEM	PART NUMBER	DESCRIPTION	QTY
	0910935	XBAR ASY HRDWR-XHD 5X5 CENTURY	-
1	0301197	COMP.SPRING,CROSS BAR,FI	1
2	0301398	STEEL BALL, 1-3/16 DIA	1
3	0301822	O-RING - PIVOT PIN	1
4	0303097	THRUST WASHER - 1/8 THK	1
5	0303098	THRUST WASHER - 1/16 THK	1
6	0400271	SCREW, 5/8-11X4-1/2 HHC	2
7	0400508	LKWASHER, 5/8	2
8	07011109	SPACER, DETENT BALL SPRING	1
9	0724980	PIN-TOP HALF PIVOT	1
10	0724981	PIN-BOTTOM HALF PIVOT	1
11	0807124	CROSSBAR WELDMENT 25K, CENTURY	1

0911237, ILLUMINATED LEGEND RH LOWER ASSEMBLY

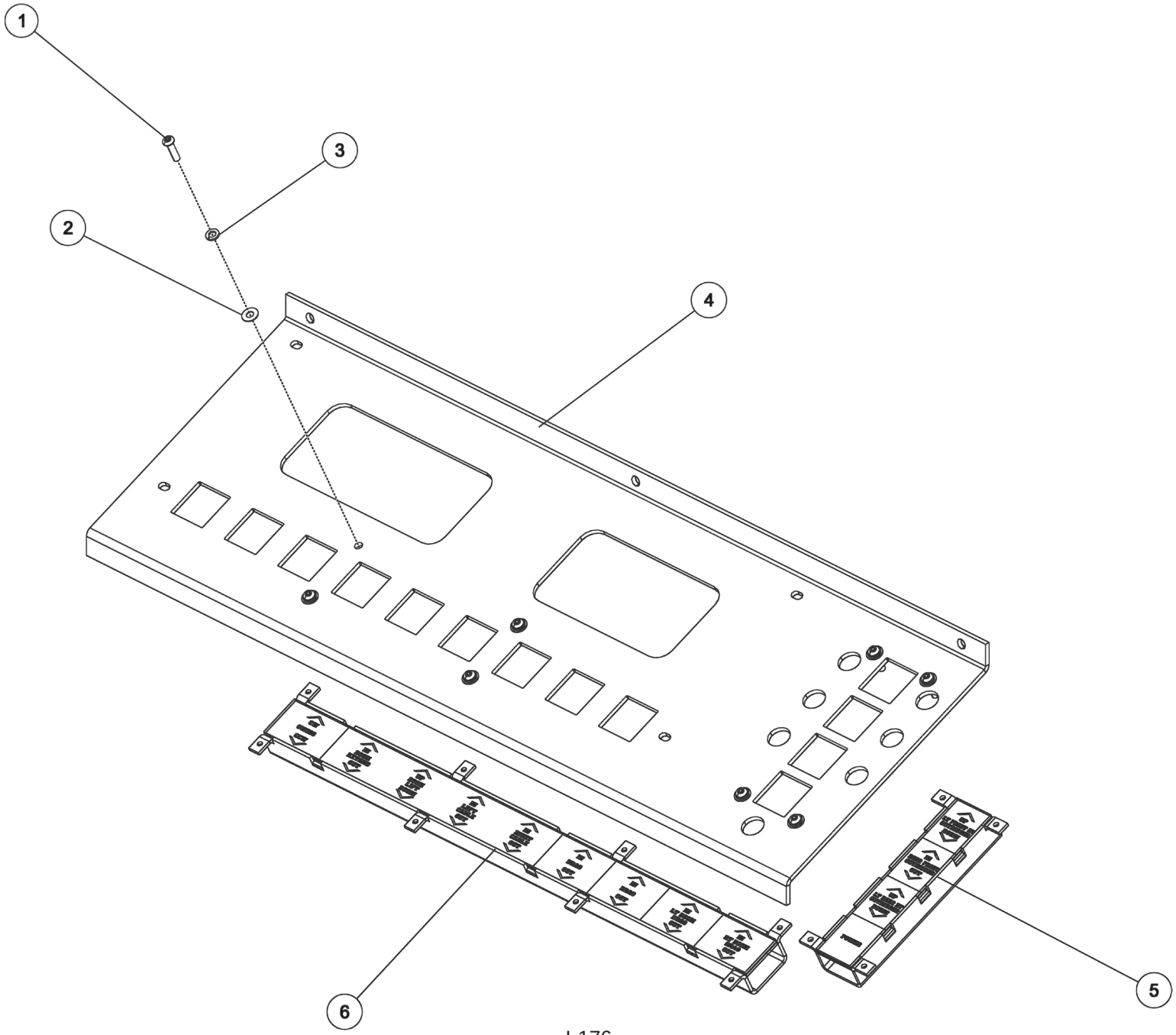

0911237, ILLUMINATED LEGEND RH LOWER ASSEMBLY

ITEM	PART NUMBER	DESCRIPTION	QTY
	0911237	ILLUM LEGEND ASSY RH LWR WLV	-
1	04000381	SS BHSCS 1/4-20 X 1	8
2	0400454	WASHER, 1/4 SS	8
3	0402111	LKWASHER, 1/4 SS	8
4	0727011	APANEL, CONTROL	1
5	09000120	ILLUMINATED LEGEND ASSY	1
6	09000142	ILLUMINATED LEGEND ASSY 24.75	1

09000120, ILLUMINATED LEGEND ASSEMBLY

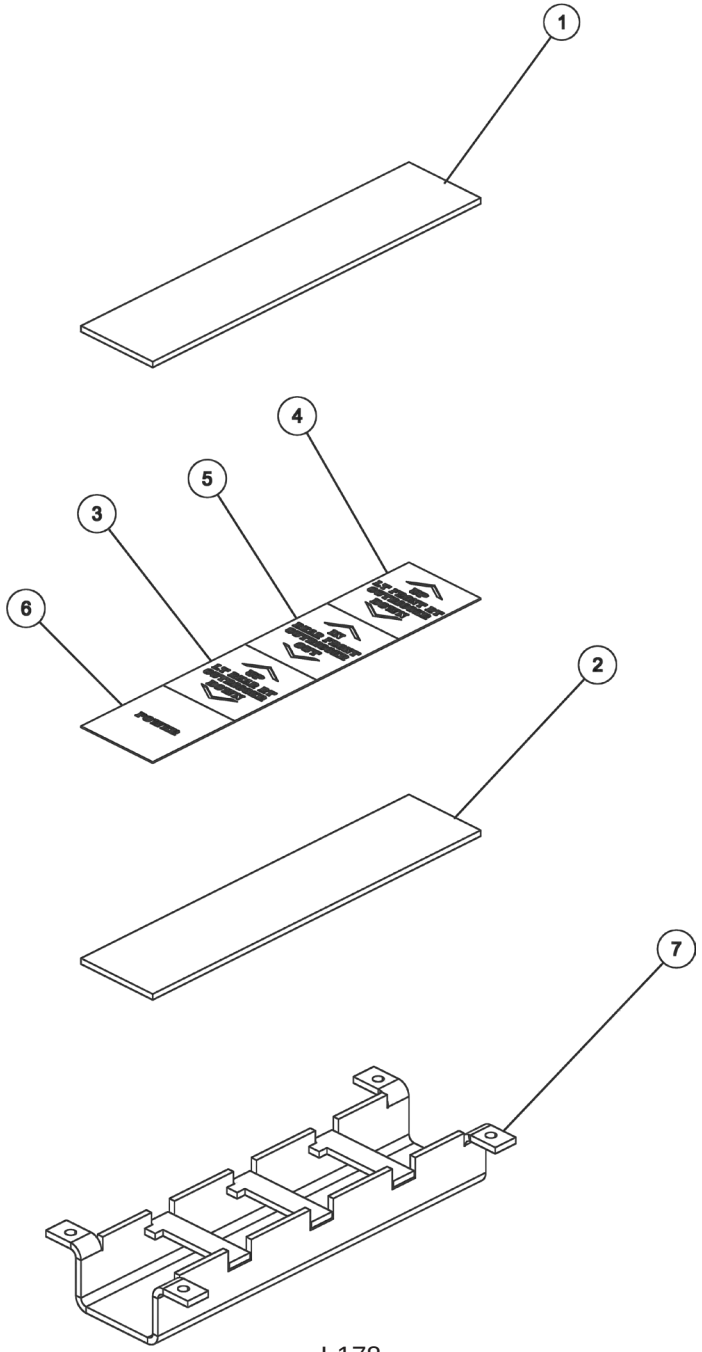

09000120, ILLUMINATED LEGEND ASSEMBLY

ITEM	PART NUMBER	DESCRIPTION	QTY
	09000120	ILLUMINATED LEGEND ASSY	-
1	0310093	PLASTIC, DUST COVER-CLEAR 8	1
2	0310095	PLASTIC, COLOR LENS -RED 8	1
3	0501579	LEGEND, PANEL-REAR OUTRIGGER	1
4	0501580	LEGEND, PANEL-FRONT OUTRIGGER	1
5	0501618	LEGEND,PANEL- REAR/ FRT OUTRIG	1
6	0501620	LEGEND,PANEL- POWER	1
7	0807114	CHANNEL,LIGHT&LEGEND WLMT 8	1

09000142, ILLUMINATED LEGEND ASSEMBLY

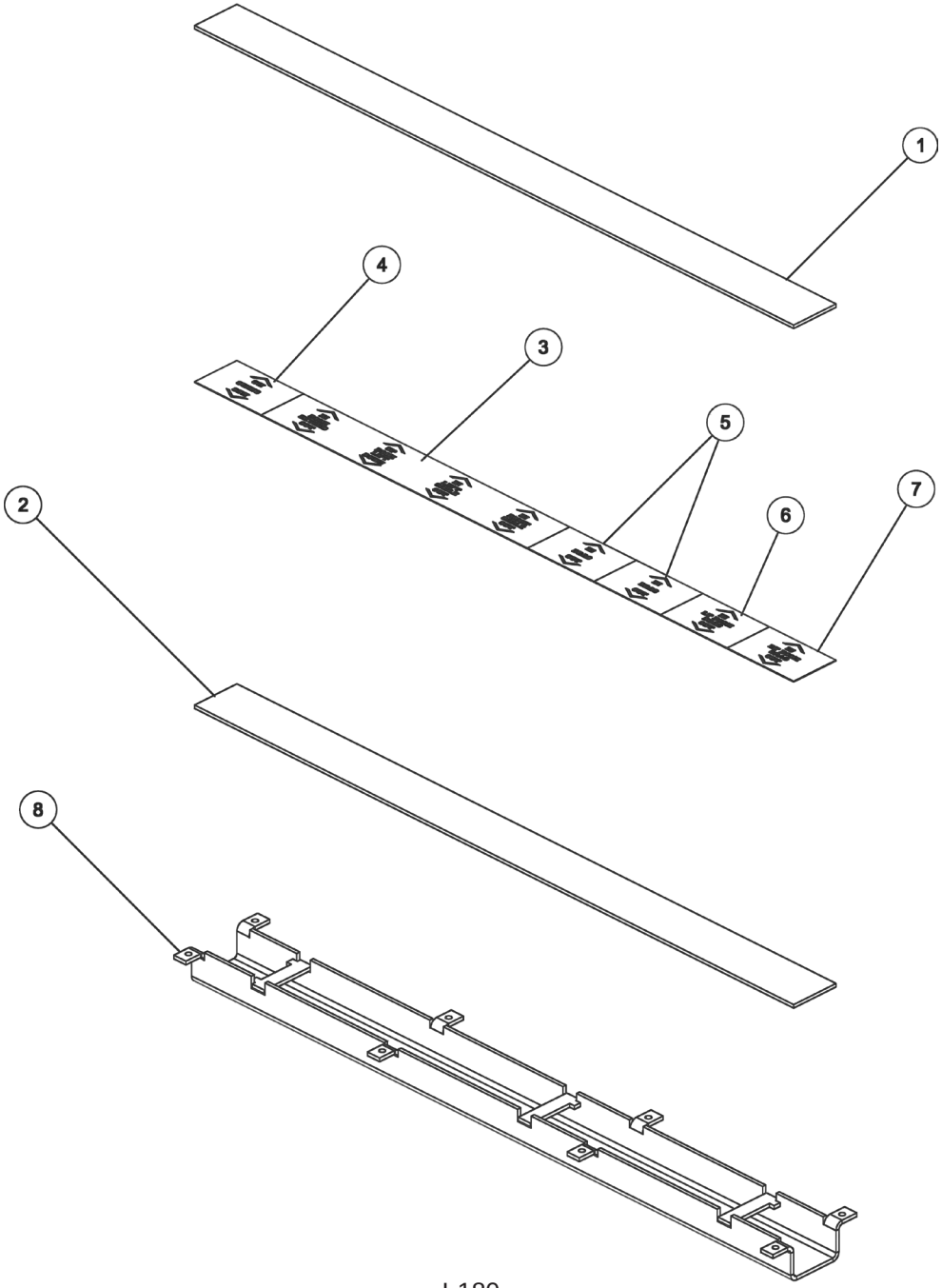

09000142, ILLUMINATED LEGEND ASSEMBLY

ITEM	PART NUMBER	DESCRIPTION	QTY
	09000142	ILLUMINATED LEGEND ASSY 24.75	-
1	0310002	PLASTIC, DUST COVER-CLEAR 24.7	1
2	0310003	PLASTIC, COLOR LENS -RED 24.75	1
3	0501584	LEGEND, PANEL-BOOM/CABLE	1
4	0501585	LEGEND, PANEL-SWING	1
5	0501586	LEGEND, PANEL-DRAG	2
6	0501621	LEGEND,PANEL- LT BOOM DRAG	1
7	0501622	LEGEND,PANEL- RT BOOM DRAG	1
8	0807056	CHANNEL,LIGHT&LEGEND WLMT 24.7	1

0911324, RIGHT HAND CONTROL STATION ASSEMBLY

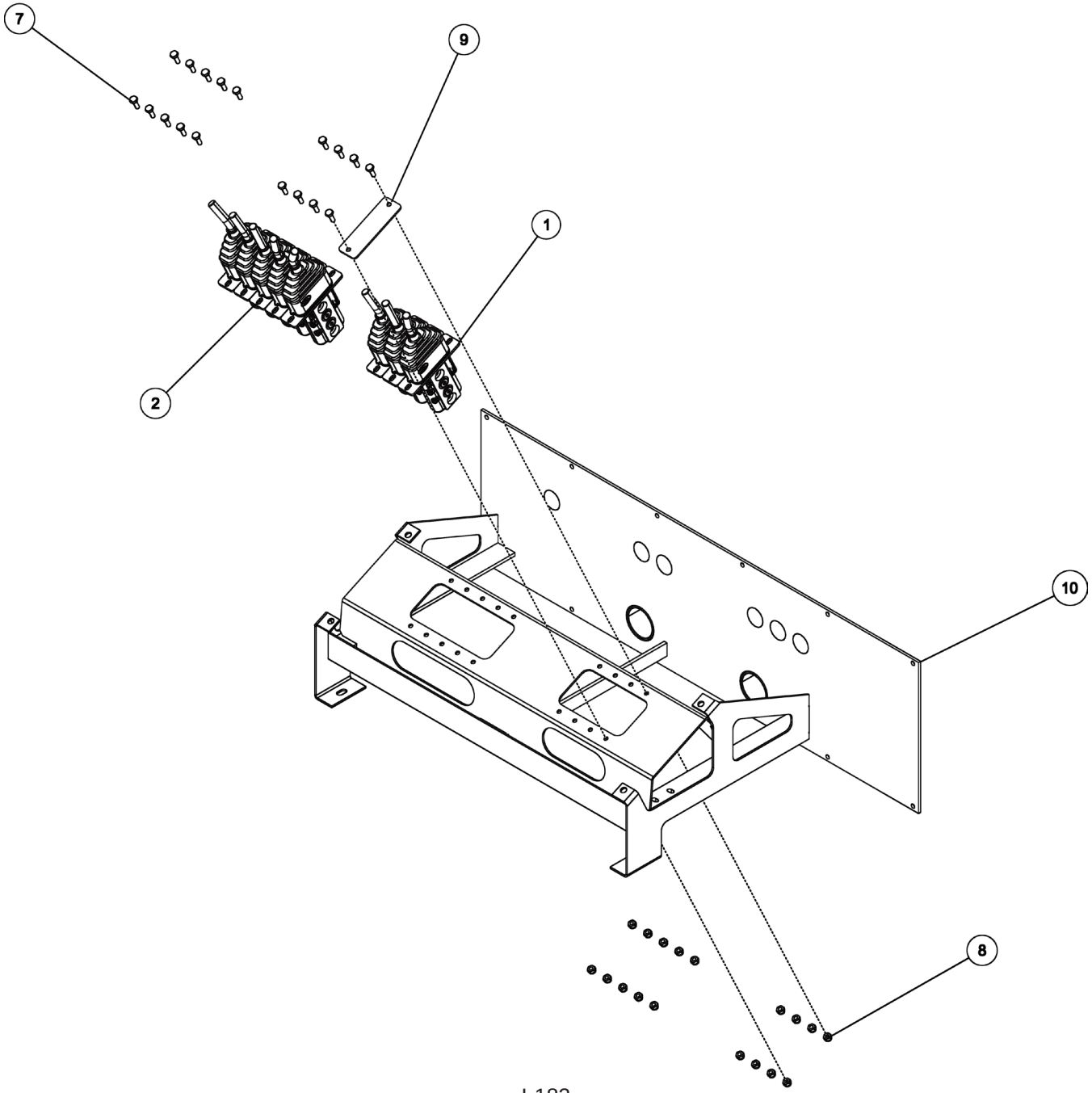

0911324, RIGHT HAND CONTROL STATION ASSEMBLY

ITEM	PART NUMBER	DESCRIPTION	QTY
	0911324	RH CTL STATION ASSY 5 WINCH WV	-
1	03016755	VLV-3 SPL PILOT W/THREADED HDL	1
2	03016757	VLV-5 SPL PILOT W/THREADED HDL	1
3	0301781	FITTING, SWV NUT RUN TEE	2
4	0301998	HOSE HYD, 24" LG	2
5	0302695	ADAPTER, 6MJ-4MB	2
6	0311427	FITTING, 4MJ-4MB 45	1
7	0400066	SCREW, 1/4-20X3/4 HHC GR5	1
8	0400367	NUT, 1/4-20 LOK	1
9	0724777	PLATE-JOYSTICK COVER	1
10	0810056	CNTRL FRAME WLDMT-RT PILOT VLV	1
11	IC209	FTG-90DEG ADPTR 1/4 ORB	2

0911324, RIGHT HAND CONTROL STATION ASSEMBLY

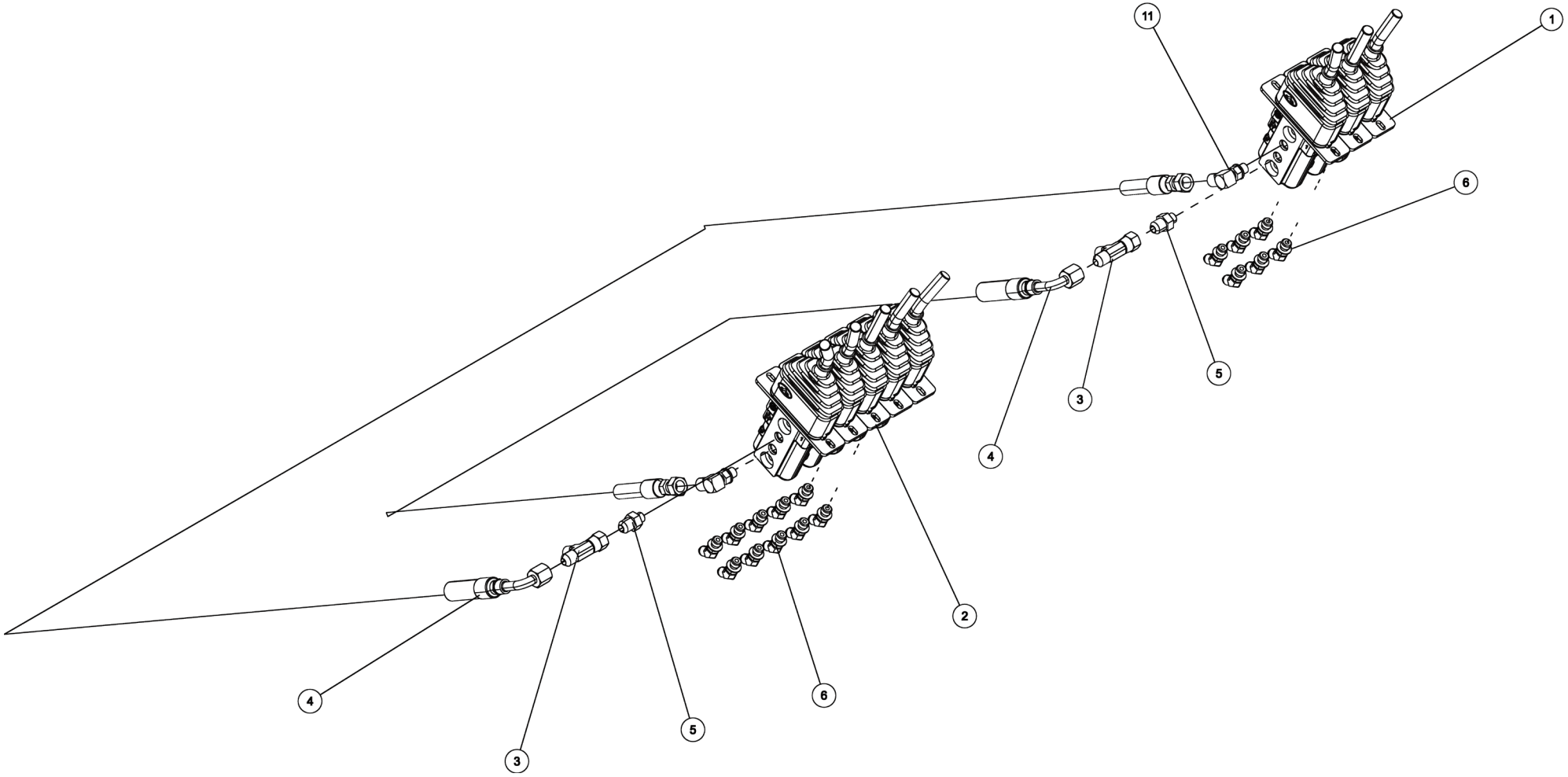

0911324, RIGHT HAND CONTROL STATION ASSEMBLY

ITEM	PART NUMBER	DESCRIPTION	QTY
	0911324	RH CTL STATION ASSY 5 WINCH WV	-
1	03016755	VLV-3 SPL PILOT W/THREADED HDL	1
2	03016757	VLV-5 SPL PILOT W/THREADED HDL	1
3	0301781	FITTING, SWV NUT RUN TEE	2
4	0301998	HOSE HYD, 24" LG	2
5	0302695	ADAPTER, 6MJ-4MB	2
6	0311427	FITTING, 4MJ-4MB 45	1
7	0400066	SCREW, 1/4-20X3/4 HHC GR5	1
8	0400367	NUT, 1/4-20 LOK	1
9	0724777	PLATE-JOYSTICK COVER	1
10	0810056	CNTRL FRAME WLDMT-RT PILOT VLV	1
11	IC209	FTG-90DEG ADPTR 1/4 ORB	2

0911957, D-RING KIT

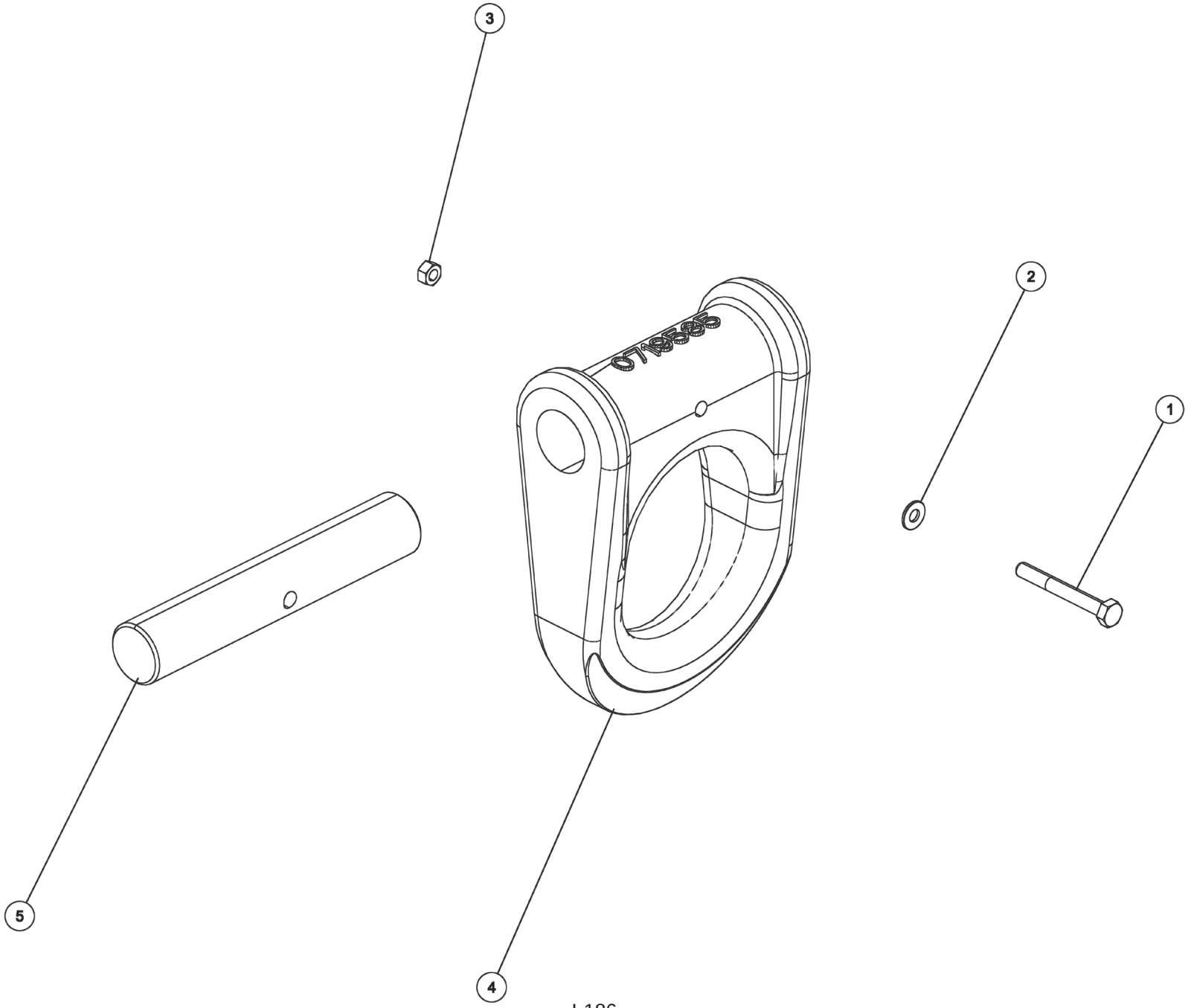

0911957, D-RING KIT

ITEM	PART NUMBER	DESCRIPTION	QTY
	0906532	SWIVEL - BOOM ASSEMBLY	-
1	0300113	GREASE FITTING, 1/4-28 STR	1
2	0303441	SHEAVE-10" DIA X 1.5 BORE	1
3	0400133	SCREW, 3/8-16X3 HHC GR5	1
4	0400150	SCREW, 3/8-16X2-1/2 HHC GR5	2
5	0400392	NUT, 3/8-16 LOK	3
6	0700801	GUIDE, BTM CABLE	2
7	0716134	SHEAVE SHAFT	1
8	0803313	GUIDE-CABLE WELDMENT	1
9	0804449	BOOM END SWIVEL WLDT-INTEGRATD	1

0912071, 1135 MAIN BOOM ASSEMBLY

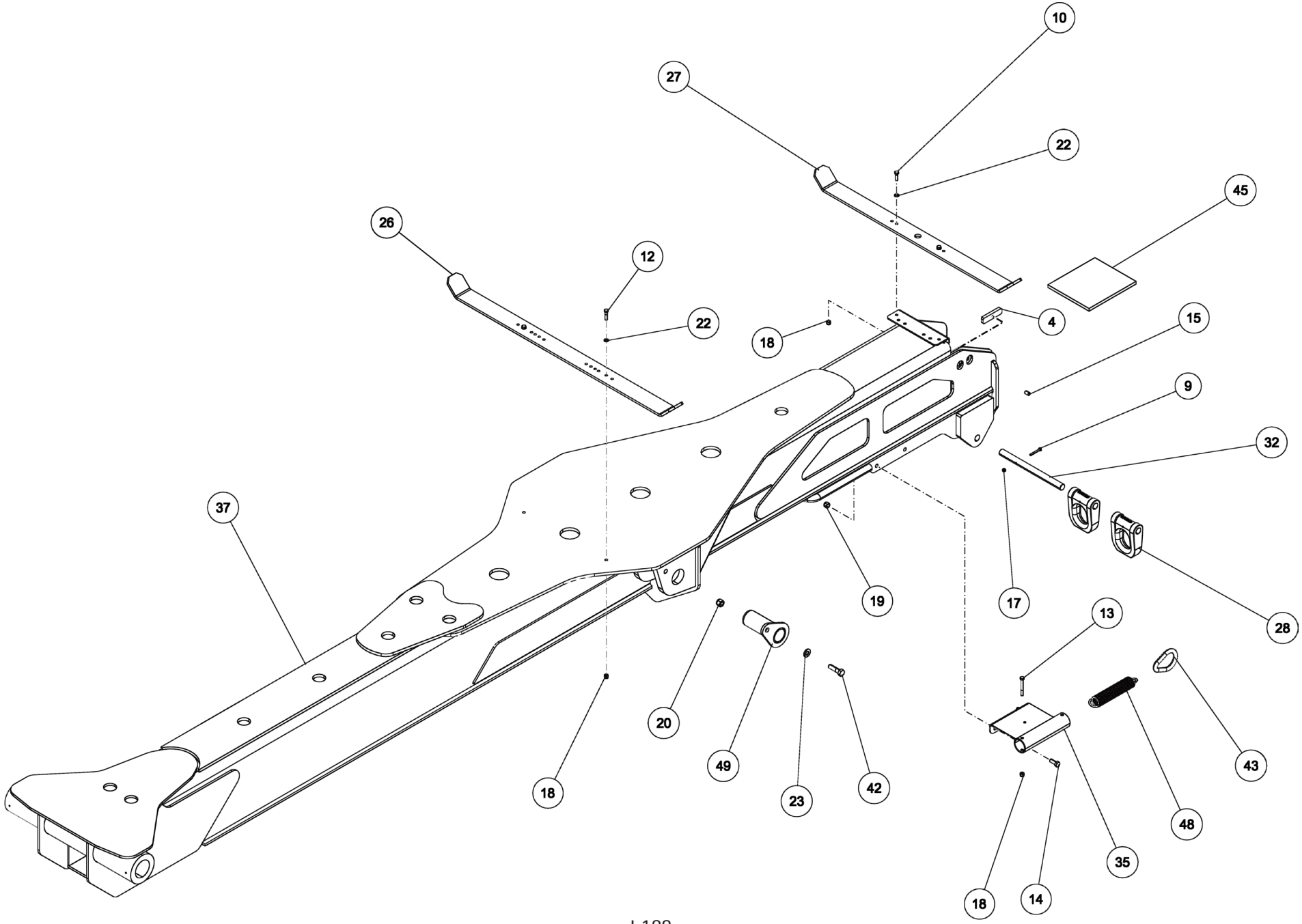

0912071, 1135 MAIN BOOM ASSEMBLY

ITEM	PART NUMBER	DESCRIPTION	QTY
	0912071	ASSY, 1135 BOOM	-
1	0300113	GREASE FITTING, 1/4-28 STR	2
2	0301895	GREASE FITTING, 1/8 STR PTF	1
3	0302276	FITTING, ELB 90 DEG	2
4	0303490	PAD-WEAR 1/2" X 1" X 4"	2
5	0306743	CYL - BOOM EXTEND	1
6	0311460	1/4" GREASE TUBING	1
7	0311575	1/4x1/4 PTC SWIVEL MALE ELBOW	1
8	0400059	SCREW, 1/4-20X5/8 HHC GR5	2
9	0400078	SCREW, 1/4-20X2 HHC GR5	1
10	0400122	SCREW, 3/8-16X1-1/4 HHC GR5	2
11	0400126	SCREW, 3/8-16X1 HHC GR5	2
12	0400132	SCREW, 3/8-16X1-1/2 HHC GR5	2
13	0400133	SCREW, 3/8-16X3 HHC GR5	4
14	0400177	SCREW, 1/2-13X1-1/4 HHC GR5	4
15	0400204	SET SCREW, 1/2-13X3/4 SOC	4
16	0400349	SCREW, 3/8-16X3/4 FHS	2
17	0400367	NUT, 1/4-20 LOK	1
18	0400392	NUT, 3/8-16 LOK	1
19	0400408	NUT, 1/2-13 LOK	4
20	0400426	NUT, 5/8-11 LOK GR8	2
21	0400452	LKWASHER, 1/4	2
22	0400482	LKWASHER, 3/8	8
23	0400503	WASHER, 5/8 GR8	2
24	0400554	PIN, 3/8X1 SPR	6
25	0400771	SCREW, 3/8-16X1-1/2 HHC GR8	2

ITEM	PART NUMBER	DESCRIPTION	QTY
26	0706042	WING, CABLE LONG 1040&1040B	1
27	0706043	WING, CABLE MED 1040&1040B	1
28	0712380	D-RING	2
29	0715951	PIN, EXT CYL BASE	1
30	0715952	PIN, EXT CYL ROD	1
31	0719585	D-RING, TOWING	2
32	0722817	PIN	1
33	0722957	PIN	2
34	0807637	INNER BOOM WLDMT 1130	1
35	0807844	CABLE TIEBACK WELDMENT	2
36	0810012	SPIDER CLAMP	1
37	0810611	BOOM, OUTER 1135	1
38	0906532	SWIVEL - BOOM ASSEMBLY	2
39	3012-793001	PLATE - LUBE MTG.	1
40	9010024	FITT, BRASS CONN 1/4T-1/8MP	1
41	9012552	BULKHEAD ADAPTER 1/8M-1/8F NPT	1
42	9044409	SCREW, 5/8-11X2-1/4 HHC GR8 YZ	2
43	9048800	5/8 WELDLESS CHAIN LINK	2
44	915040501	CLAMP PLATE	2
45	930100002	LOWER WEAR PAD-RECOVERY	1
46	945030001	PAD RETAINING PLATE-UPPE	1
47	945030004	UPPER WEAR PAD-RECOVERY	1
48	945030007	CABLE TIE BACK SPRING-1	2
49	945351500	PIN WELD'T LOWER LIFT CY	2
50	HD0151	SNAP RING, 2"INTERNAL	4

0912071, 1135 MAIN BOOM ASSEMBLY

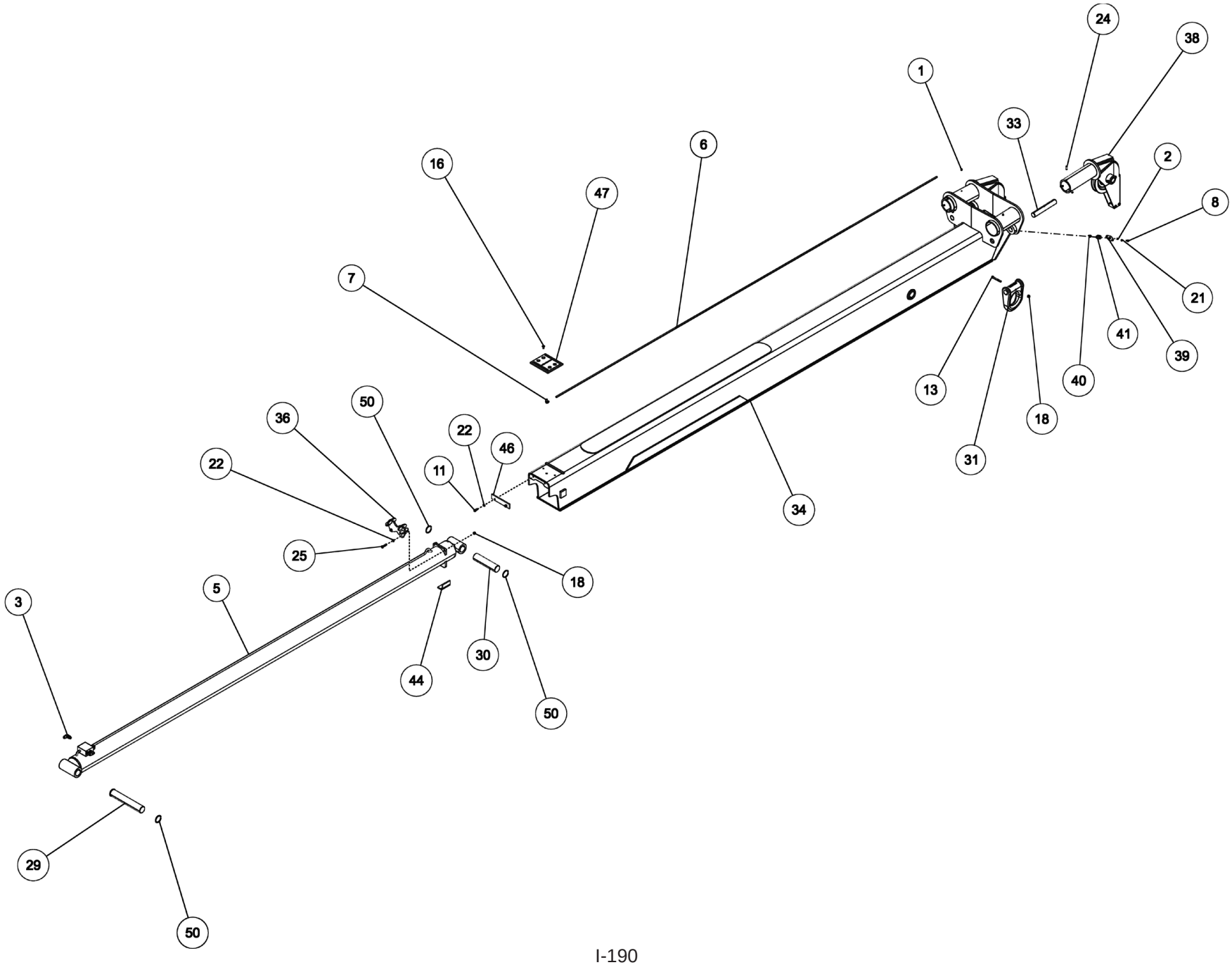

0912071, 1135 MAIN BOOM ASSEMBLY

ITEM	PART NUMBER	DESCRIPTION	QTY
	0912071	ASSY, 1135 BOOM	-
1	0300113	GREASE FITTING, 1/4-28 STR	2
2	0301895	GREASE FITTING, 1/8 STR PTF	1
3	0302276	FITTING, ELB 90 DEG	2
4	0303490	PAD-WEAR 1/2" X 1" X 4"	2
5	0306743	CYL - BOOM EXTEND	1
6	0311460	1/4" GREASE TUBING	1
7	0311575	1/4x1/4 PTC SWIVEL MALE ELBOW	1
8	0400059	SCREW, 1/4-20X5/8 HHC GR5	2
9	0400078	SCREW, 1/4-20X2 HHC GR5	1
10	0400122	SCREW, 3/8-16X1-1/4 HHC GR5	2
11	0400126	SCREW, 3/8-16X1 HHC GR5	2
12	0400132	SCREW, 3/8-16X1-1/2 HHC GR5	2
13	0400133	SCREW, 3/8-16X3 HHC GR5	4
14	0400177	SCREW, 1/2-13X1-1/4 HHC GR5	4
15	0400204	SET SCREW, 1/2-13X3/4 SOC	4
16	0400349	SCREW, 3/8-16X3/4 FHS	2
17	0400367	NUT, 1/4-20 LOK	1
18	0400392	NUT, 3/8-16 LOK	1
19	0400408	NUT, 1/2-13 LOK	4
20	0400426	NUT, 5/8-11 LOK GR8	2
21	0400452	LKWASHER, 1/4	2
22	0400482	LKWASHER, 3/8	8
23	0400503	WASHER, 5/8 GR8	2
24	0400554	PIN, 3/8X1 SPR	6
25	0400771	SCREW, 3/8-16X1-1/2 HHC GR8	2

ITEM	PART NUMBER	DESCRIPTION	QTY
26	0706042	WING, CABLE LONG 1040&1040B	1
27	0706043	WING, CABLE MED 1040&1040B	1
28	0712380	D-RING	2
29	0715951	PIN, EXT CYL BASE	1
30	0715952	PIN, EXT CYL ROD	1
31	0719585	D-RING, TOWING	2
32	0722817	PIN	1
33	0722957	PIN	2
34	0807637	INNER BOOM WLDMT 1130	1
35	0807844	CABLE TIEBACK WELDMENT	2
36	0810012	SPIDER CLAMP	1
37	0810611	BOOM, OUTER 1135	1
38	0906532	SWIVEL - BOOM ASSEMBLY	2
39	3012-793001	PLATE - LUBE MTG.	1
40	9010024	FITT, BRASS CONN 1/4T-1/8MP	1
41	9012552	BULKHEAD ADAPTER 1/8M-1/8F NPT	1
42	9044409	SCREW, 5/8-11X2-1/4 HHC GR8 YZ	2
43	9048800	5/8 WELDLESS CHAIN LINK	2
44	915040501	CLAMP PLATE	2
45	930100002	LOWER WEAR PAD-RECOVERY	1
46	945030001	PAD RETAINING PLATE-UPPE	1
47	945030004	UPPER WEAR PAD-RECOVERY	1
48	945030007	CABLE TIE BACK SPRING-1	2
49	945351500	PIN WELD'T LOWER LIFT CY	2
50	HD0151	SNAP RING, 2"INTERNAL	4

0906532, SWIVEL, BOOM ASSEMBLY

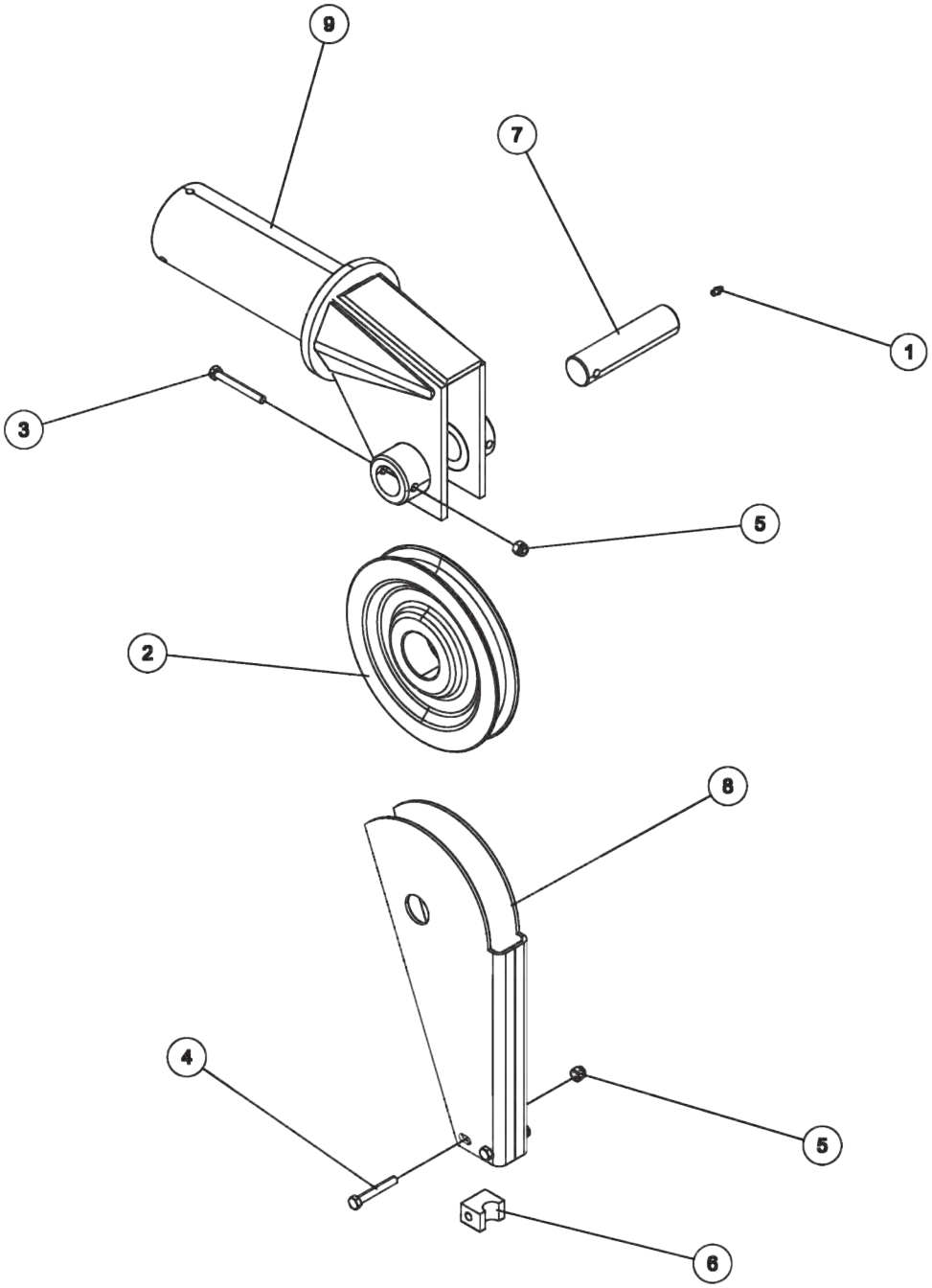

0906532, SWIVEL, BOOM ASSEMBLY

ITEM	PART NUMBER	DESCRIPTION	QTY
	0906532	SWIVEL - BOOM ASSEMBLY	-
1	0300113	GREASE FITTING, 1/4-28 STR	1
2	0303441	SHEAVE-10" DIA X 1.5 BORE	1
3	0400133	SCREW, 3/8-16X3 HHC GR5	1
4	0400150	SCREW, 3/8-16X2-1/2 HHC GR5	2
5	0400392	NUT, 3/8-16 LOK	3
6	0700801	GUIDE, BTM CABLE	2
7	0716134	SHEAVE SHAFT	1
8	0803313	GUIDE-CABLE WELDMENT	1
9	0804449	BOOM END SWIVEL WLDT-INTEGRATD	1

124004464, HEEL PLATE

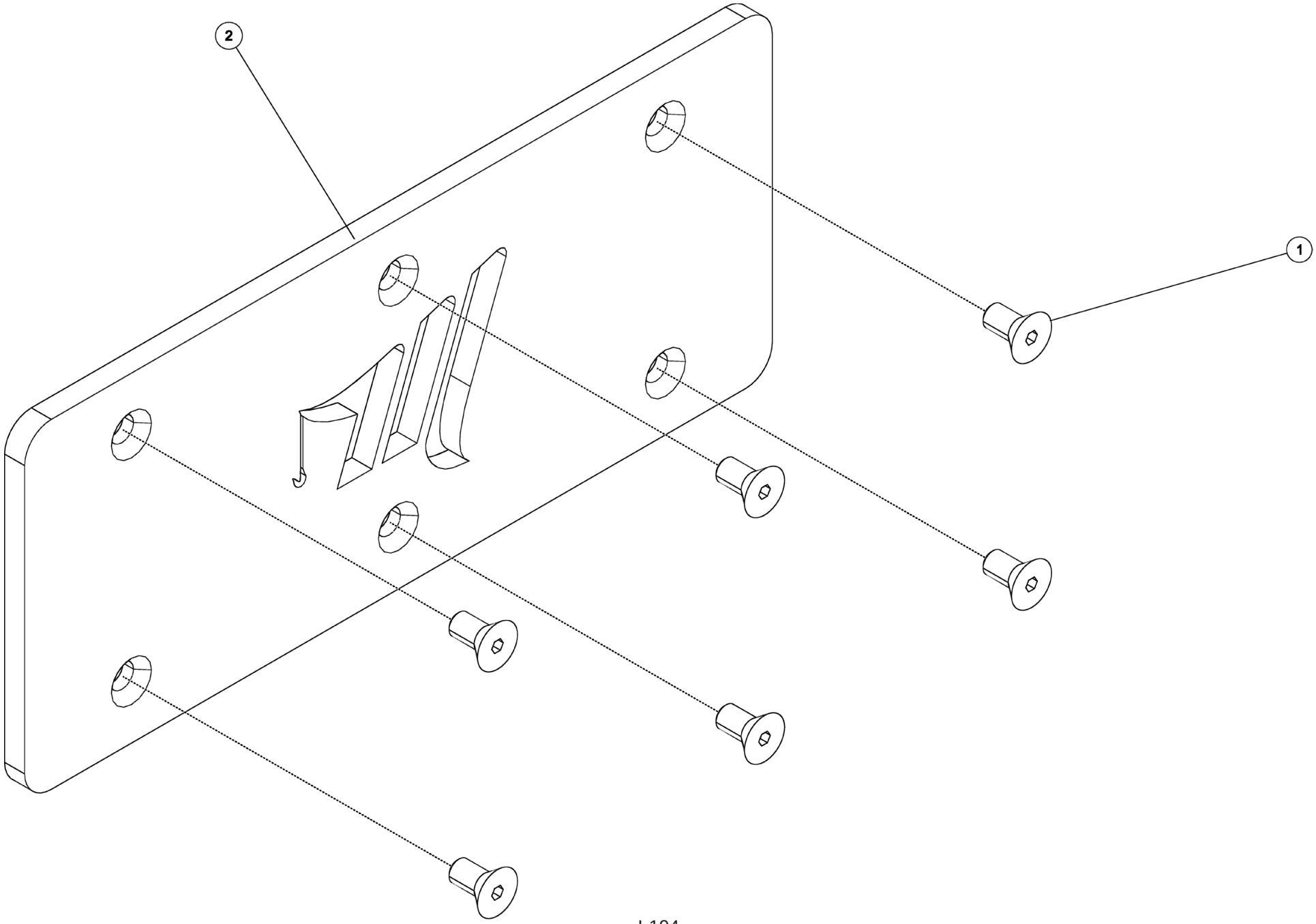

124004464, HEEL PLATE

ITEM	PART NUMBER	DESCRIPTION	QTY
	124004464	ALUM HEEL PLATE-14" SDU4&COACH	-
1	0400155	SCREW, 3/8-16X3/4 FHS	6
2	0724683	UNDERLIFT HEEL BOARD-LOWRIDER	1

NOTES

NOTES

CENTURY®

Miller Industries Towing Equipment Inc.
8503 Hilltop Drive • Ooltewah, Tennessee 37363
(423) 238-4171 • www.millerind.com