CENTURY®

LEGENDARY LEADERSHIP

OWNER'S MANUAL

SERIES 12 LCG CARRIERS GENERATION II

INSTALLATION, OPERATION, MAINTENANCE & PARTS

NOTE: MANUAL including SPECIFICATIONS, subject to change without notice
All ratings specified are based on structural factors only,
not vehicle capacities or capabilities.

CENTURY®
Miller Industries PA Carrier Division.
2577 Kirila Dr.
Hermitage, PA 16148

FORM NO. 0540025
REV. 12/2023
PRICE $25.00

Section V - PARTS

This Section is provided by the manufacturer for the purpose of ordering any component part of the **Series 12 GEN II Carrier** that may be required when part replacement is necessary. Be certain to use only original equipment replacement parts for warranty purposes as well as for keeping your **Series 12 GEN II Carrier** in its original state and optimum operating capacities.

When ordering replacement or spare parts be sure to provide the following information to your carrier manufacturer authorized representative.

1. **Manual Number & Date of Publication**
2. **Manual Page Number**
3. **Page Title**
4. **Reference Number of Part Desired**
5. **Part Number**
6. **Part Description**
7. **Quantity of Part Desired**

Providing this information will help ensure that the correct parts will be delivered to you in an expedient manner without delay. Should additional information be required for repair or replacement of certain components, contact your **MILLER INDUSTRIES DISTRIBUTOR.**

The Manufacturer reserves the right, without notice or obligation, to improve or modify their products, which may change the specifications, models and feature availability.

Section V - PARTS
REMOVABLE TUBE RAIL SIDES

ASSEMBLY #	BED LENGTH	REMOVABLE TUBE RAIL SIDE COMBINATIONS
09009171-190	19 TO 20.5 FT	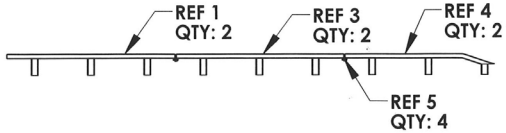
09009171-210	21 TO 22 FT	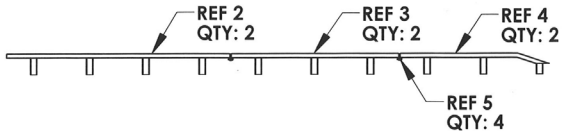

REF	PART #	DESCRIPTION	QTY
1	346071F	FRONT REMOVABLE TUBE RAIL - 3 POST	SEE CHART
2	346095F	FRONT REMOVABLE TUBE RAIL - 4 POST	SEE CHART
3	346071M	MIDDLE REMOVABLE TUBE RAIL - 3 POST	SEE CHART
4	346064	REAR REMOVABLE TUBE RAIL - 3 POST	SEE CHART
5	0306070	LYNCH PIN - 7/16 x 1-3/4 IN.	SEE CHART

ALUMINUM BED ASSEMBLY

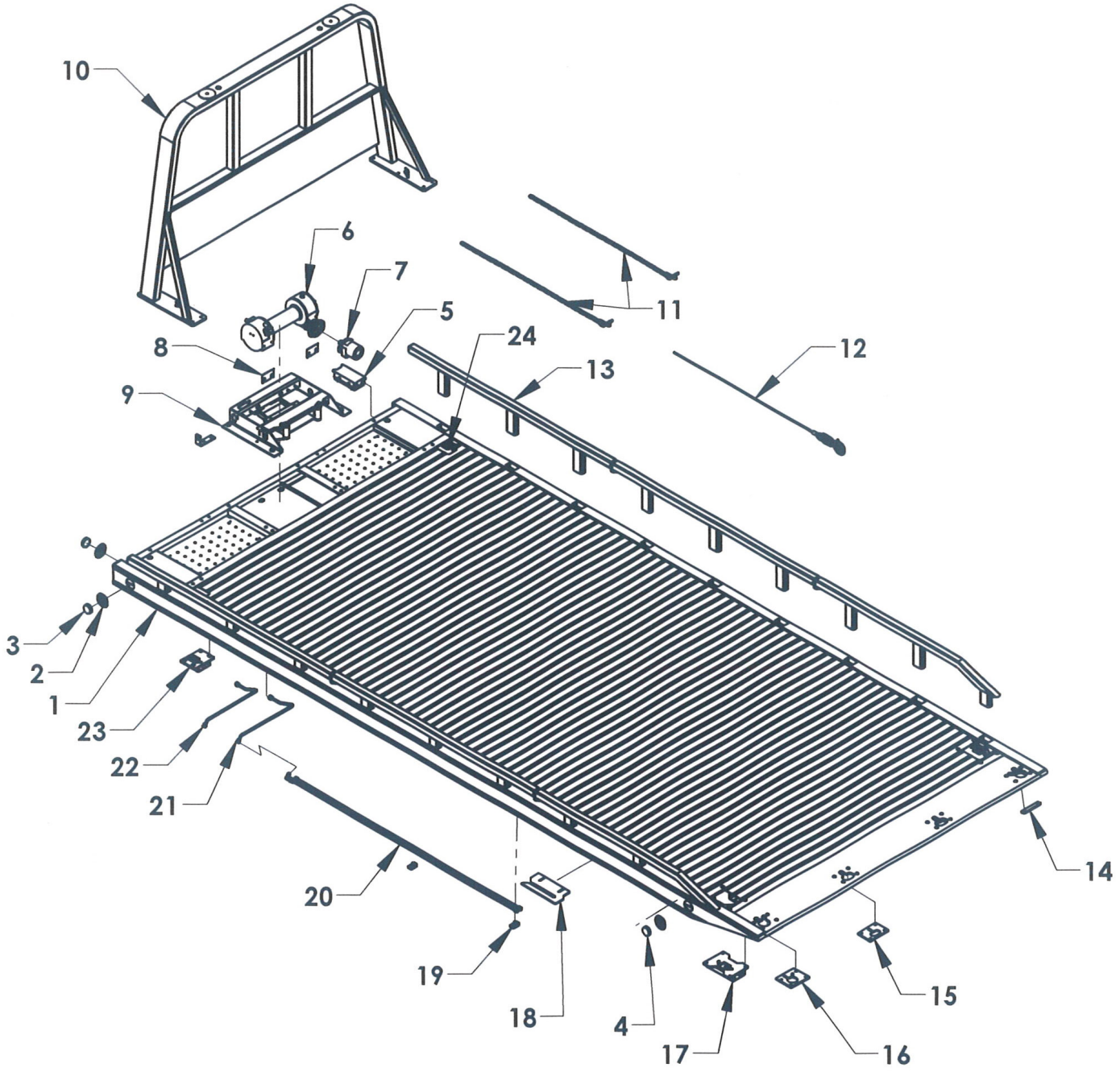

ALUMINUM BED ASSEMBLY GEN II
REMOVABLE RAIL

REF. NO.	QTY	PART NUMBER	DESCRIPTION
1	1	301812L3CCT102-XXX	SERIES 12 G3 AL BED WELDMENT
			XXX= 205, 210, 215, 220
2	6	0311516	2-1/2" MARKER LIGHT GROMMET
3	4	0311513	2-1/2" AMBER MARKER LIGHT
4	2	0311512	2-1/2" RED MARKER LIGHT
5	1	0303385	10 POST JUNCTION BOX
6	1	0308698	RAMSEY 8000 LB WORM GEAR WINCH
7	1	0320147	RAMSEY WINCH MOTOR 5 CUBIC INCH
8	2	0701172	SPACER WINCH BRACKET
9	1	0940425	WINCH MOUNTING FRAME
10	1	0809558-XX	CAB PROTECTOR
			XX= 38, 45, 48, 50, 52, 54, 57, 60, 62, 64
11	2	0302493	FRONT SAFETY CHAIN ASSEMBLY 5/16 x 8'
12	1	0301669	WINCH CABLE ASSEMBLY
13	1	09009171-XXX	REMOVABLE TUBE RAIL (SEE CHART)
14	2	07004889	APPROACH SKID PLATE
15	2	34521	ALUM APPROACH PLATE CHAINLOCK
16	2	07007442	ALUM APPROACH PLATE CHAINLOCK - 2 WAY
17	X	08001669	CHAINLOCK - SIDE CHAIN BINDER
18	1	33813	ANTI-TILT PLATE
19	2	0751188	FLUID TUBE MOUNTING BLOCK - LOWER
20	2	383S1-XXX	SERIES 10/12/16 UNDER BODY FLUID TUBE
			XXX= 205, 210, 215, 220
21	1	0751975-R	WINCH MOTOR FLUID TUBE-S12 G2-RAMSEY-LONG
22	1	0751974-R	WINCH MOTOR FLUID TUBE-S12 G2-RAMSEY-SHORT
23	1	08004844L	CHAINLOCK-FRONT CHAIN BINDER - LH
24	1	08004844R	CHAINLOCK-FRONT CHAIN BINDER - RH

REMOVABLE BLADE RAIL SIDES

ASSEM #	BED LENGTH	REMOVABLE BLADE RAIL SIDE COMBINATIONS
34B175	17.5 FT	1, 8, 10
34B180	18.0 FT	2, 8, 10
34B185	18.5 FT	3, 8, 10
34B190	19.0 FT	4, 8, 10
34B195	19.5 FT	5, 8, 10
34B200	20.0 FT	6, 8, 10
34B205	20.5 FT	7, 8, 10
34B210	21.0 FT	4, 9, 10
34B215	21.5 FT	5, 9, 10
34B220	22.0 FT	6, 9, 10

REF	PART #	DESCRIPTION	QTY
1	34B060FL & R	FRONT REMOVABLE BLADE RAIL - 2 POST	SEE CHART
2	34B066FL & R	FRONT REMOVABLE BLADE RAIL - 2 POST	SEE CHART
3	34B072FL & R	FRONT REMOVABLE BLADE RAIL - 2 POST	SEE CHART
4	34B078FL & R	FRONT REMOVABLE BLADE RAIL - 3 POST	SEE CHART
5	34B084FL & R	FRONT REMOVABLE BLADE RAIL - 3 POST	SEE CHART
6	34B090FL & R	FRONT REMOVABLE BLADE RAIL - 3 POST	SEE CHART
7	34B096FL & R	FRONT REMOVABLE BLADE RAIL - 3 POST	SEE CHART
8	34B072ML & R	MIDDLE REMOVABLE BLADE RAIL - 3 POST	SEE CHART
9	34B096ML & R	MIDDLE REMOVABLE BLADE RAIL - 4 POST	SEE CHART
10	34B064RL & R	REAR REMOVABLE BLADE RAIL - 3 POST	SEE CHART

STEEL BED ASSEMBLY GEN II
REMOVABLE TUBE RAIL

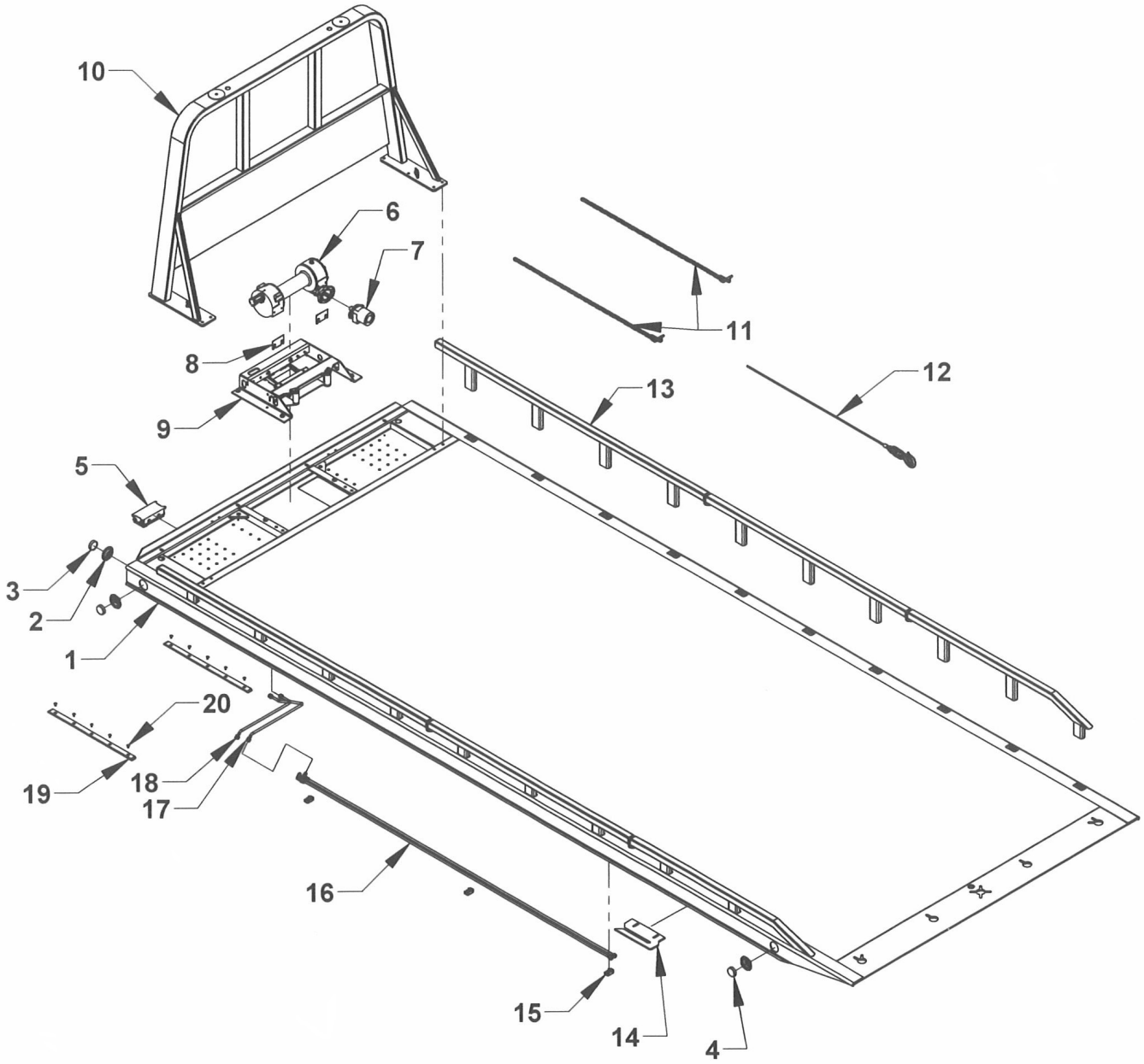

STEEL BED ASSEMBLY GEN II
REMOVABLE TUBE RAIL

REF. NO.	QTY	PART NUMBER	DESCRIPTION
1	1	30284162XXX	SERIES 12 G2 ST BED WELDMENT XXX= 205, 210, 215, 220, 225, 230, 250, 260
2	6	0311516	2-1/2" MARKER LIGHT GROMMET
3	4	0311513	2-1/2" AMBER MARKER LIGHT
4	2	0311512	2-1/2" RED MARKER LIGHT
5	1	0303385	10 POST JUNCTION BOX
6	1	0308698	RAMSEY 8000 LB WORM GEAR WINCH
7	1	0320147	RAMSEY WINCH MOTOR 5 CUBIC INCH
8	2	0701172	SPACER WINCH BRACKET
9	1	0940425	WINCH MOUNTING FRAME
10	1	0809558-XX	CAB PROTECTOR XX= 48, 50, 52, 54, 57, 60, 62, 64, 68
11	2	0302493	FRONT SAFETY CHAIN ASSEMBLY 5/16 x 8'
12	1	0301669	WINCH CABLE ASSEMBLY
13	1	09009171-XXX	REMOVABLE TUBE RAIL (SEE CHART)
14	1	33813	ANTI-TILT PLATE
15	3	0751188	FLUID TUBE MOUNTING BLOCK - LOWER
16	2	383S1-XXX	SERIES 10/12/16 UNDER BODY FLUID TUBE XXX=205, 210, 215, 220, 225, 230, 250, 260
17	1	0751975-R	WINCH MOTOR FLUID TUBE-S12 G2-RAMSEY-LONG
18	1	0751974-R	WINCH MOTOR FLUID TUBE-S12 G2-RAMSEY-SHORT
19	2	07005597	I-BEAM WEAR PAD
20	10	04000844	FHSCS 5/16-18 x 5/8 ZP

STEEL BED ASSEMBLY - BLADE SIDES
GEN 2 SERIES 12 RIGHT APPROACH

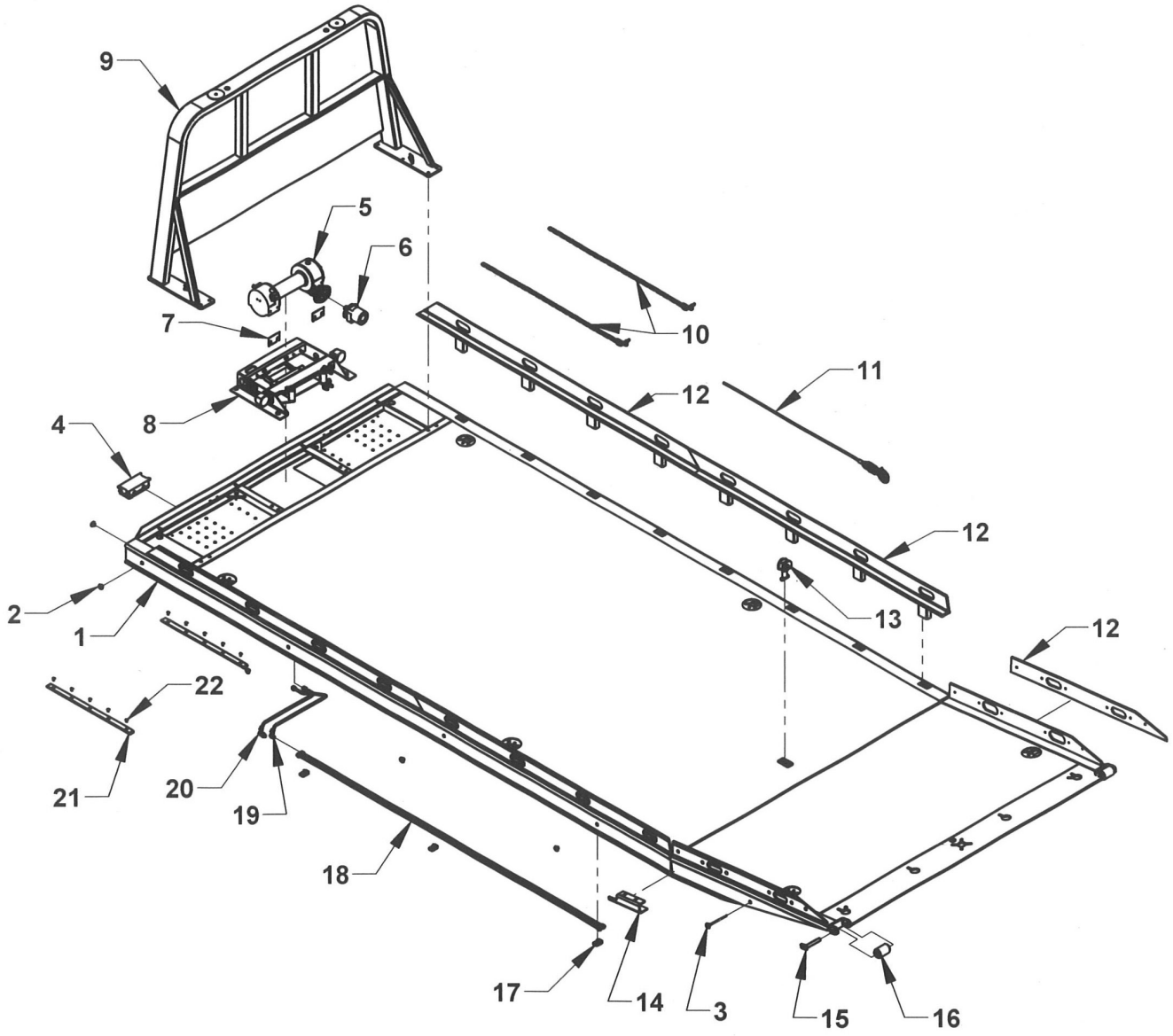

STEEL BED ASSEMBLY - BLADE SIDES
GEN 2 SERIES 12 RIGHT APPROACH

REF. NO.	. QTY	PART NUMBER	DESCRIPTION
1	1	3028122RXXX	S12 G2 RA STEEL BED WELDMENT XXX = 205, 210, 215, 220
2	10	0311521	3/4" AMBER MARKER LIGHT W/GROMMET
3	2	0311522	3/4" RED MARKER LIGHT W/GROMMET
4	1	0303385	10 POST JUNCTION BOX
5	1	0308698	RAMSEY 8000 LB WORM GEAR
6	1	0320147	WINCH MOTOR 5 CUBIC INCH
7	2	0701172	SPACER, WINCH BRACKET
8	1	0940425	WINCH MOUNTING FRAME
9	1	0809558-XX	CAB PROTECTOR XX = 38, 45, 48, 50, 52, 54, 57, 60, 62, 64
10	2	0302493	FRONT SAFETY CHAIN ASSEMBLY - 5/16 x 8'
11	1	0301669	WINCH CABLE ASSEMBLY
12	1	09001210-XXX	RIGHT APPROACH BLADE RAIL SIDES XXX= 205, 210, 215, 220
13	1	0805324	CABLE GUIDE WELDMENT (HOOK STYLE)
14	1	0750465	ANTI-TILT PLATE RA
15	2	0806252	ROLLER TIP WHEEL KEEPER PIN
16	2	0721483	ROLLER
17	3	0751188	FLUID TUBE MOUNTING BLOCK-LOWER
18	2	383S1-XXX	SERIES 10/12/16 UNDER BODY FLUID TUBE XXX = 205, 210, 215, 220
19	1	0751975-R	WINCH MOTOR FLUID TUBE-S12 G2-RAMSEY-LONG
20	1	0751974-R	WINCH MOTOR FLUID TUBE-S12 G2-RAMSEY-SHORT
21	2	07005597	I-BEAM WEAR PAD
22	10	04000844	FHSCS 5/16-18 x 5/8 ZP

RIGHT APPROACH REMOVABLE BLADE RAIL SIDES

ASSEMBLY #	BED LENGTH	REMOVABLE BLADE RAIL SIDE COMBINATIONS
09001210-190	19.0 FT	1 8 9
09001210-195	19.5 FT	2 8 9
09001210-200	20.0 FT	3 8 9
09001210-205	20.5 FT	4 8 9
09001210-210	21.0 FT	5 8 9
09001210-215	21.5 FT	6 8 9
09001210-220	22.0 FT	7 8 9

REF	PART #	DESCRIPTION	QTY
1	08001089-190L & R	RA FRONT REMOVABLE BLADE RAIL - 3 POST	SEE CHART
2	08001089-195L & R	RA FRONT REMOVABLE BLADE RAIL - 3 POST	SEE CHART
3	08001089-200L & R	RA FRONT REMOVABLE BLADE RAIL - 3 POST	SEE CHART
4	08001089-205L & R	RA FRONT REMOVABLE BLADE RAIL - 4 POST	SEE CHART
5	08001089-210L & R	RA FRONT REMOVABLE BLADE RAIL - 4 POST	SEE CHART
6	08001089-215L & R	RA FRONT REMOVABLE BLADE RAIL - 4 POST	SEE CHART
7	08001089-220L & R	RA FRONT REMOVABLE BLADE RAIL - 4 POST	SEE CHART
8	0809192L & R	RA MIDDLE REMOVABLE BLADE RAIL - 4 POST	SEE CHART
9	0751006L & R	RA REAR REMOVABLE BLADE RAIL	SEE CHART

STEEL BED ASSEMBLY
GEN 2 SERIES 12 SST

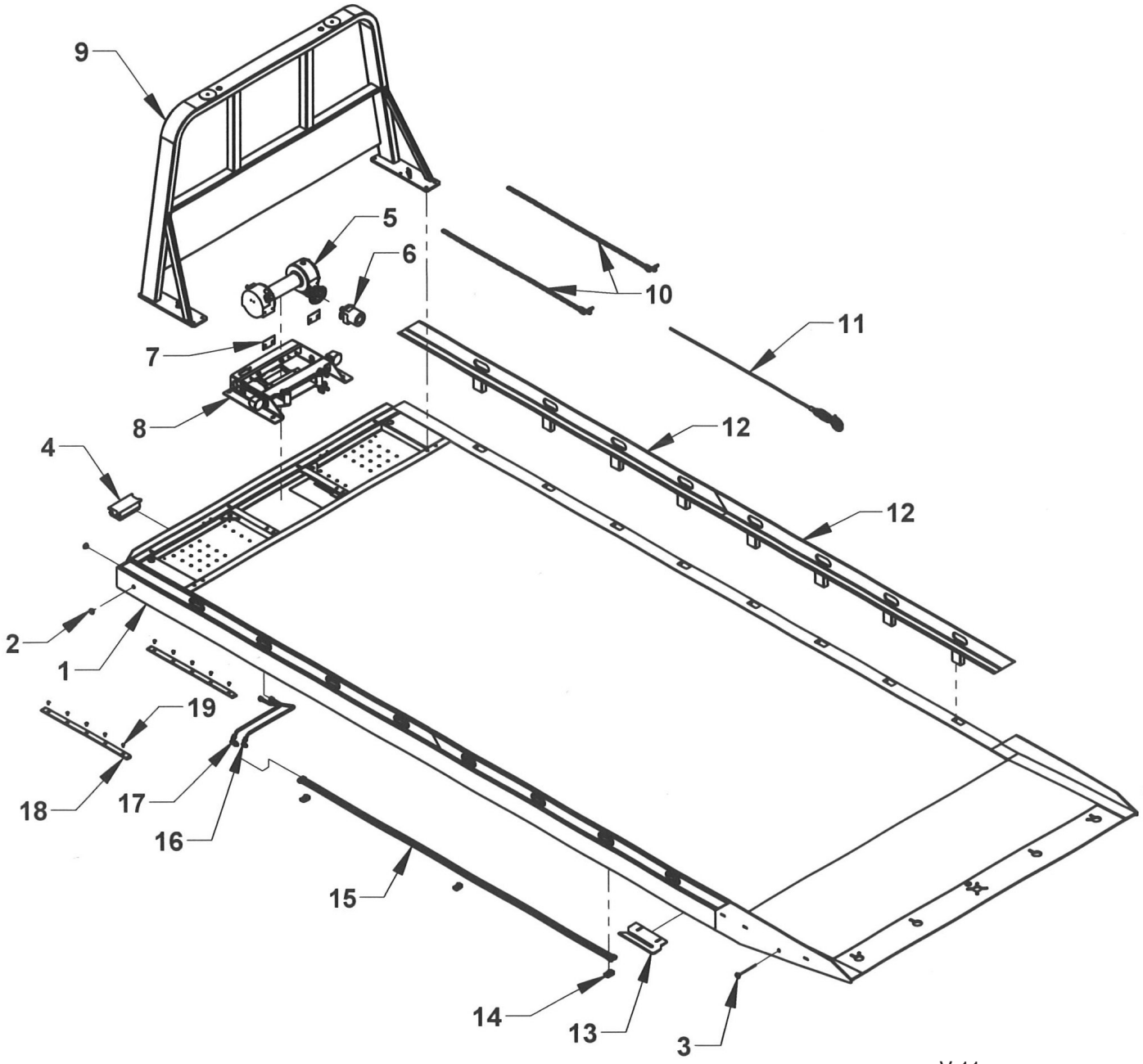

STEEL BED ASSEMBLY
GEN 2 SERIES 12 SST BLADE RAIL SIDES

REF. NO.	. QTY	PART NUMBER	DESCRIPTION
1	1	30284122LSXXX	S12 G2 SST BLADE RAIL SIDES BED WELDMENT XXX = 205, 210, 215, 220
2	4	0311521	3/4" AMBER MARKER LIGHT W/GROMMET
3	2	0311522	3/4" RED MARKER LIGHT W/GROMMET
4	1	0303385	10 POST JUNCTION BOX
5	1	0308698	RAMSEY 8000 LB WORM GEAR
6	2	0320147	WINCH MOTOR 5 CUBIC INCH
7	1	0701172	SPACER, WINCH BRACKET
8	1	0940425	WINCH MOUNTING FRAME
9	1	0809558-XX	CAB PROTECTOR XX = 38, 45, 48, 50, 52, 54, 57, 60, 62, 64
10	2	0302493	FRONT SAFETY CHAIN ASSEMBLY - 5/16 x 8'
11	1	0301669	WINCH CABLE ASSEMBLY
12	1	0909446-XXX	SST BLADE RAIL SIDES XXX = 205, 210, 215, 220
13	1	33813	ANTI-TILT PLATE
14	3	0751188	FLUID TUBE MOUNTING BLOCK-LOWER
15	2	383S1-XXX	SERIES 10/12/16 UNDER BODY FLUID TUBE XXX = 205, 210, 215, 220
16	1	0751975-R	WINCH MOTOR FLUID TUBE-S12 G2-RAMSEY-LONG
17	1	0751974-R	WINCH MOTOR FLUID TUBE-S12 G2-RAMSEY-SHORT
18	2	07005597	I-BEAM WEAR PAD
19	10	04000844	FHSCS 5/16-18 x 5/8 ZP

SST REMOVABLE BLADE RAIL SIDES

ASSEMBLY #	BED LENGTH	REMOVABLE BLADE RAIL SIDE COMBINATIONS
0909446-190	19.0 FT	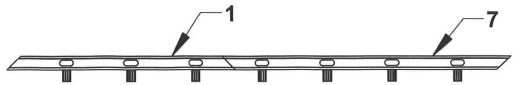
0909446-195	19.5 FT	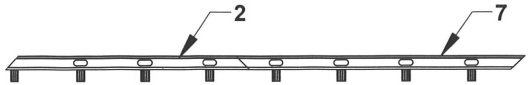
0909446-200	20.0 FT	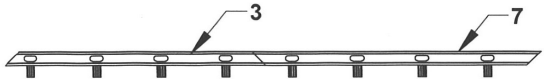
0909446-205	20.5 FT	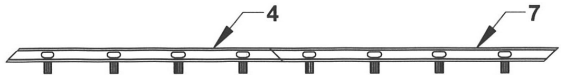
0909446-210	21.0 FT	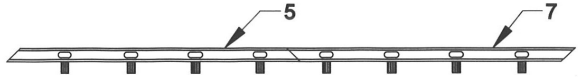
0909446-215	21.5 FT	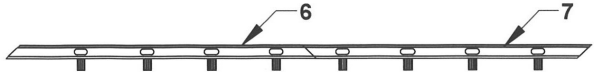
0909446-220	22.0 FT	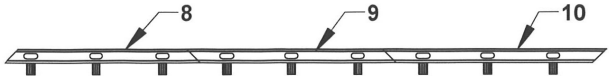

REF	PART #	DESCRIPTION	QTY
1	0809846-190L & R	SST FRONT REMOVABLE BLADE RAIL - 3 POST	SEE CHART
2	0809846-195L & R	SST FRONT REMOVABLE BLADE RAIL - 4 POST	SEE CHART
3	0809846-200L & R	SST FRONT REMOVABLE BLADE RAIL - 4 POST	SEE CHART
4	0809846-205L & R	SST FRONT REMOVABLE BLADE RAIL - 4 POST	SEE CHART
5	0809846-210L & R	SST FRONT REMOVABLE BLADE RAIL - 4 POST	SEE CHART
6	0809846-215L & R	SST FRONT REMOVABLE BLADE RAIL - 4 POST	SEE CHART
7	0809686L & R	SST REAR REMOVABLE BLADE RAIL - 4 POST	SEE CHART
8	0809846-220L & R	SST FRONT REMOVABLE BLADE RAIL - 3 POST	SEE CHART
9	0809195L & R	SST MIDDLE REMOVABLE BLADE RAIL - 3 POST	SEE CHART
10	0809770L & R	SST REAR REMOVABLE BLADE RAIL - 3 POST	SEE CHART

IGUS TRACK AND BOLT KIT - 09020735
120" SLIDEBACK CYLINDER STROKE

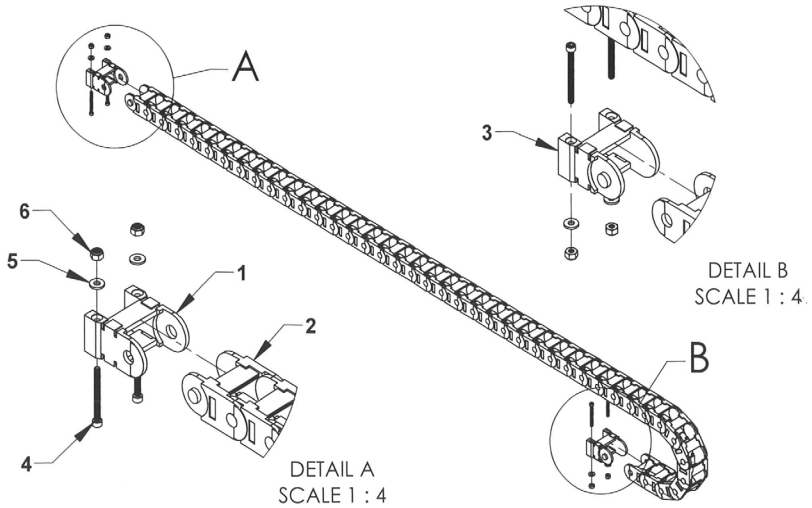

REF	QTY	PART #	DESCRIPTION
	1	09020735	IGUS 200.03.055 41 LINK TRACK & BOLT KIT
1	1	03017004	IGUS 2000.03.1 END LINK - FEMALE
2	45	03005615	IGUS 200.03.055 LINK
3	1	03017005	IGUS 2100.03.2 END LINK - MALE
4	4	0403165	BOLT SHCS #10-24 UNC x 2 ZP
5	4	0400450	FLAT WASHER #10 SAE ZP
6	4	0400358	NUT NYLOK #10-24 UNC ZP

IGUS TRACK AND BOLT KIT - 09020734
120" SLIDEBACK CYLINDER STROKE

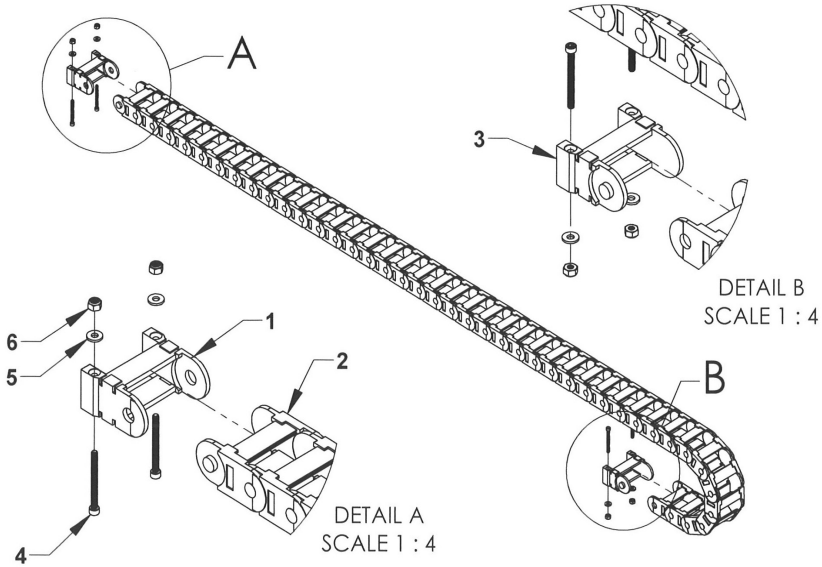

REF	QTY	PART #	DESCRIPTION
	1	09020734	IGUS 200.05.055 41 LINK TRACK & BOLT KIT
1	1	03017002	IGUS 2000.05.1 END LINK - FEMALE
2	41	03011188	IGUS 200.05.055 LINK
3	1	03017003	IGUS 2100.05.2 END LINK - MALE
4	4	0403165	BOLT SHCS #10-24 UNC x 2 ZP
5	4	0400450	FLAT WASHER #10 SAE ZP
6	4	0400358	NUT NYLOK #10-24 UNC ZP

12 SERIES LCG SUBFRAME COMPONENTS

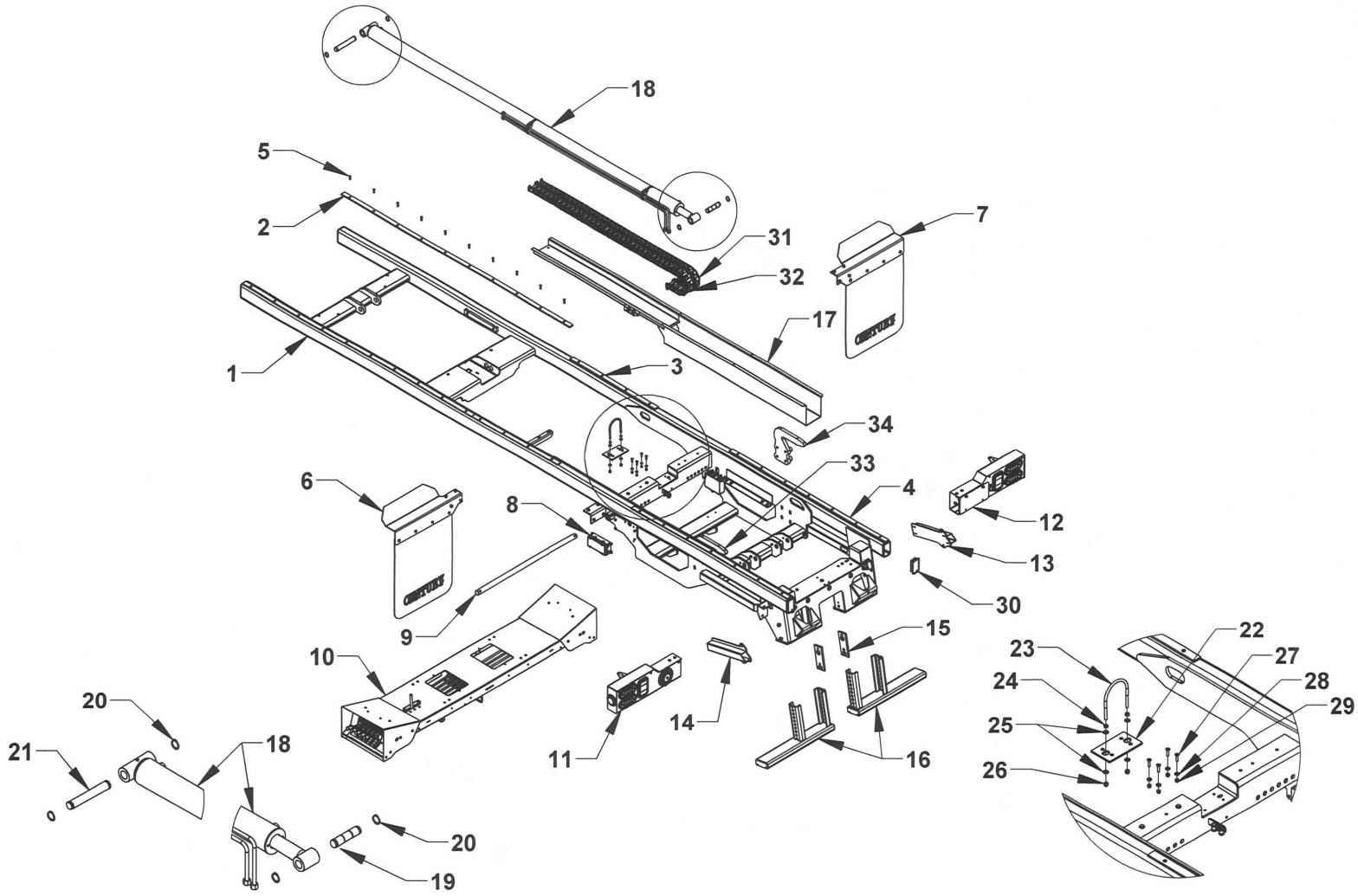

12 SERIES GEN 2 LCG SUBFRAME ASSEMBLY

REF NO.	NO REQ'D	PART NUMBER	DESCRIPTION
1	1	0809839	SERIES 12 G2 SUBFRAME WELDMENT
2	2	0308928-96	SUBFRAME BEARING PAD 5/16 x 1-1/2 x 96
3	2	0308928-36	SUBFRAME BEARING PAD 5/16 x 1-1/2 x 36
4	2	0308928-66N	NYLATRON SUBFRAME BEARING PAD 5/16 x 1-1/2 x 66
5	42	04000321	BOLT 5/16 -18 x 1-1/4 COUNTERSUNK TORX ST
6	1	0751024L	ALUM SPLASH GUARD LEFT REAR RIGHT FRONT
7	1	0751024R	ALUM SPLASH GUARD RIGHT REAR LEFT FRONT
8	1	0303385	10 POST JUNCTION BOX
9	1	0750952	S12 LCG HINGE PIN
10	1	183126	6-SPOOL CONTROL STATION
11	1	0940325L	CENTURY TAIL LIGHT HOUSING GROUP - LH
12	1	0940325R	CENTURY TAIL LIGHT HOUSING GROUP - RH
13	1	0809287R	L-ARM STORAGE TUBE SLIDE-IN 4K RH (STANDARD)
	1	160540R	L-ARM STORAGE TUBE SCOOP 4K RH (OPTIONAL)
	1	160535R	L-ARM STORAGE TUBE DROP-IN 4K RH (OPTIONAL)
14	1	0809287L	L-ARM STORAGE TUBE SLIDE-IN 4K LH (STANDARD)
	1	160540L	L-ARM STORAGE TUBE SCOOP 4K LH (OPTIONAL)
	1	160535L	L-ARM STORAGE TUBE DROP-IN 4K LH (OPTIONAL)
15	2	0750409	STABILIZER WHEEL LIFT GUIDE PAD
16	2	160525	STABILIZER EXTENSION STAND-LOW PROFILE
17	1	08098242	LCG DUAL BAY HOSE TRAY
18	1	72A35120	SLIDEBACK CYLINDER 3.5 BORE x 120 STROKE
19	1	32117	SLIDEBACK CYLINDER MOUNTING PIN 1.230
20	4	86125E	1-1/4 SNAP RING - EXTERNAL
21	1	13302010	S12 LCG SLIDEBACK CYLINDER MOUNTING PIN
22	1	0751223	LCG 12/16/20 S/B CYLINDER SUPPORT PAD
23	1	81286	U-BOLT 3/8-16 UNC
24	2	04001267	3/8-16 HEX NUT
25	4	0400480	3/8 FLAT WASHER
26	2	0400392	NYLON LOCK NUT 3/8-16 UNC
27	4	0403162	BOLT 5/16-18 UNC - ALLEN COUNTERSUNK
28	4	0400465	5/16 FLAT WASHER
29	4	0400382	NYLON LOCK NUT 5/16-18 UNC
30	2	0308748	5 x 3 x 5/16 SUBFRAME TUBE PLUG
31	1	09020735	IGUS 200.03.005 41 LINK TRACK AND BOLT KIT
32	1	09020734	IGUS 200.05.005 41 LINK TRACK AND BOLT KIT
33	1	0809759L	RIGHT APPROACH REAR BED-LOCK - LH
34	1	0809759R	RIGHT APPROACH REAR BED-LOCK - RH

12 SERIES LCG TAIL LIGHT COMPONENTS

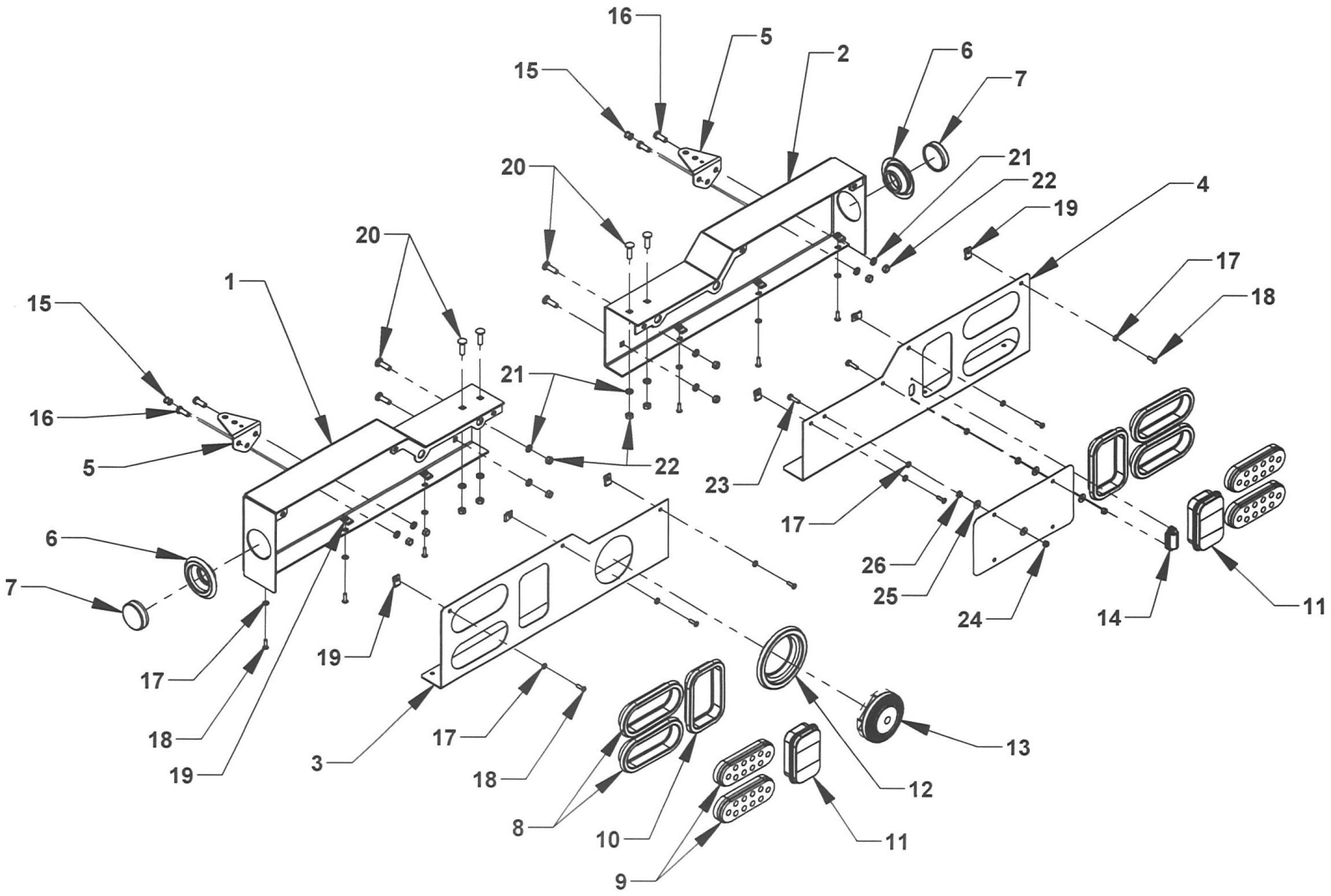

TAIL LIGHT COMPONENTS

REF	QTY	PART NO.	DESCRIPTION
1	1	0809517L	TAIL LIGHT HOUSING WELDMENT - LH
2	1	0809517R	TAIL LIGHT HOUSING WELDMENT - RH
3	1	0751892L	12/16/20 LCG TAIL LIGHT HOUSING BEZEL - LH G2
4	1	0751892R	12/16/20 LCG TAIL LIGHT HOUSING BEZEL - RH G2
5	2	0750672	WORK LIGHT MOUNTING BRACKET
6	2	0311516	2-1/2 IN. MARKER LIGHT GROMMET
7	2	0311512	2-1/2 IN. RED MARKER LIGHT
8	4	0311503	6 IN. OVAL GROMMET
9	4	0311498	6 IN. OVAL RED LIGHT
10	2	0311511	CARRIER TAIL LIGHT GROMMET
11	2	0311510	CARRIER BACK UP LIGHT
12	1	0311528	BACK UP ALARM GROMMET
13	1	0306385	BACK UP ALARM
14	1	0311525	LICENSE PLATE LIGHT
15	2	0306113	TAIL LIGHT WIRE GROMMET
16	4	0400126	BOLT, HHCS 3/8-16 UNC x 1
17	14	0402111	LOCK WASHER - 1/4 SAE SS
18	12	0400071	SCREW 1/4-20 UNC x 3/4 RD HD PHIL SS
19	12	0400371	"U" NUT 1/4-20 UNC
20	8	0403053	BOLT, CARRIAGE 3/8-16 UNC x 1-1/4 SS
21	12	0402121	LOCK WASHER - 3/8 SAE SS
22	12	0402122	HEX NUT 3/8-16 UNC SS
23	2	0402021	BOLT, HHCS 1/4-20 UNC x 1 SS
24	2	0403052	NYLON LOCK NUT 1/4-20 UNC SS
25	4	0402110	FLAT WASHER 1/4 SAE SS
26	2	0400366	JAM NUT 1/4-20 UNC

4,000 LB.WHEEL LIFT
GEN 2 LCG

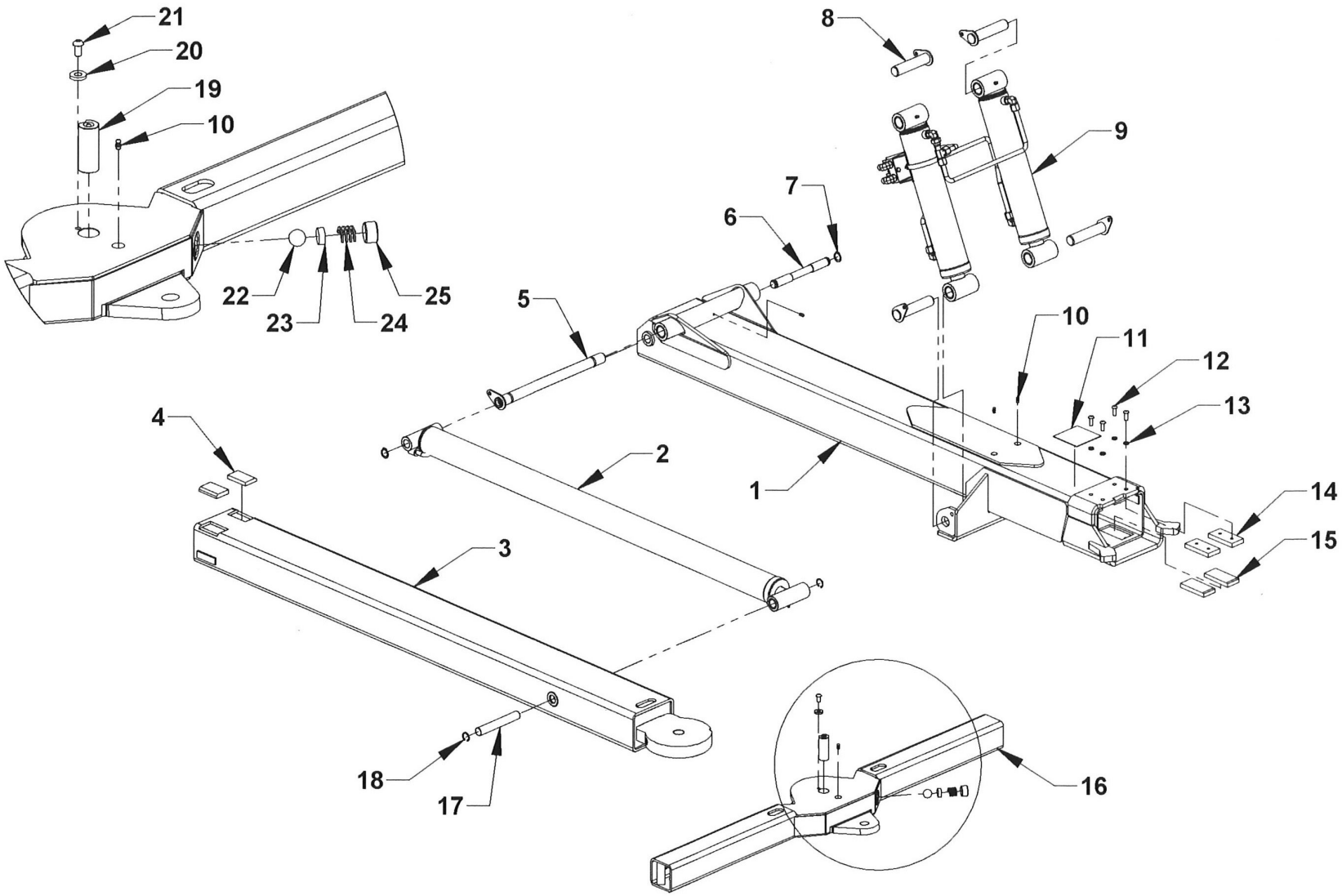

4,000 LB. WHEEL LIFT - GEN 2

REF. NO.	NO. REQ'D	PART NUMBER	DESCRIPTION
1	1	10270408	UNDERLIFT OUTER BOOM TUBE - 4K
2	1	72A30054	UNDERLIFT EXTEND CYLINDER 3.0 x 54
3	1	0811159	UNDERLIFT INNER BOOM TUBE 4K
4	2	65613	WEAR PAD 1/2 x 2 x 3
5	1	0809411U	WHEEL LIFT BOOM HINGE PIN
6	1	729352	PIN-CARRIER W/L EXTEND CYLINDER BASE
7	2	86100E	SNAP RING 1" EXTERNAL
8	4	14710	KEEPER PIN 1.23 x 4.50
9	1	72A33013G	UNDERLIFT CYLINDER FLUID TUBE GROUP
10	4	7B130	GREASE FITTING 1/4-28
11	1	0540041	UNDERLIFT RATING PLATE 4K
12	4	0403139	BOLT BHCS 3/8-16 UNC x 1
13	4	0400482	LOCK WASHER 3/8
14	2	63595H	WEAR PAD NYLATRON NSM 1/2 x 2 x 4 W/HOLES
15	2	63595	WEAR PAD NYLATRON NSM 1/2 x 2 x 4
16	1	0811160	CROSSBAR 4K (3.5 x 3.5)
17	1	72940	CYLINDER PIN 0.980 x 6.625
18	2	86100I	SNAP RING 1" INTERNAL
19	1	0940433	CROSSBAR PIVOT PIN
20	1	0720463	WASHER PIVOT PIN RETAINER 3/8
21	1	0403004	BOLT BHSC 3/8-16 UNC x 3/4
22	1	0308129	DETENT BALL 1"
23	1	07003396	SPACER CROSSBAR DETENT
24	1	0308131	SPRING CROSSBAR DETENT
25	1	0308130	PLUG CROSSBAR DETENT

WHEEL-LIFT CROSSBAR ATTACHMENTS

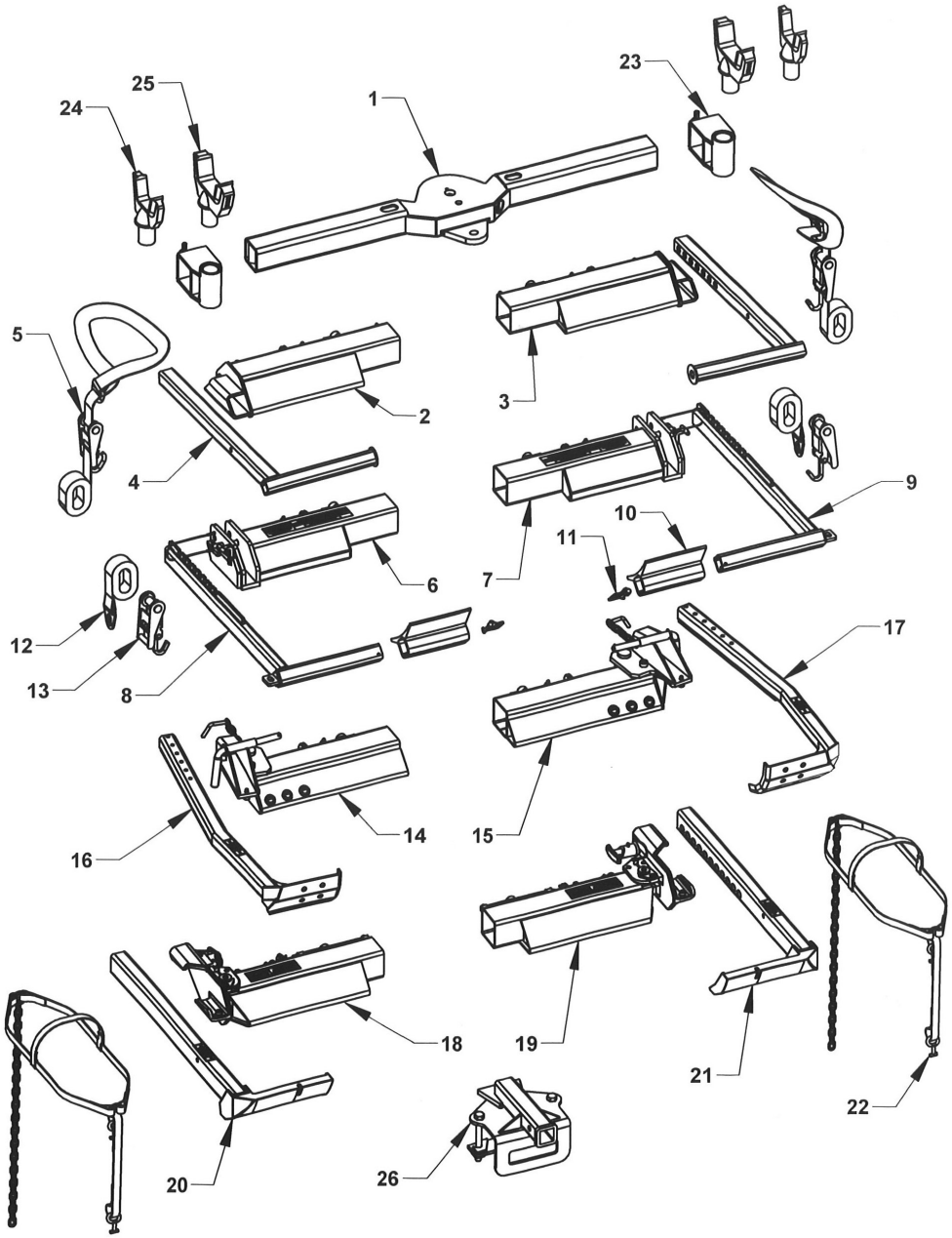

WHEEL LIFT CROSSBAR ATTACHMENTS

REF NO.	NO REQ'D	PART NUMBER	DESCRIPTION
1	1	0811160	CROSSBAR 4K (3.5 x 3.5)
2	1	0809283L	4-INCH WHEEL GRID - LH
3	1	0809283R	4-INCH WHEEL GRID - RH
4	2	08006748	STEEL L-ARM 4000 LB
5	2	0308664	STRAP AND RATCHET PIVOT ASSEMBLY
6	1	0940434L	WHEEL GRID (DROP-IN L-ARM) - LH
7	1	0940434R	WHEEL GRID (DROP-IN L-ARM) - RH
8	1	65250L	4000 LB L-ARM - LH
9	1	65250R	4000 LB L-ARM - RH
10	2	65245	REMOVABLE PAN (CHEVRON)
11	2	84911	SAFETY PIN, 5/16 (CHEVRON)
12	2	65285	WHEEL STRAP WITH D-RING
13	2	65280A	RATCHET AND HOOK
14	1	8800800	LH WHEEL GRID
15	1	8800900	RH WHEEL GRID
16	1	8700190	LH WHEEL RETAINER
17	1	8700180	RH WHEEL RETAINER
18	1	0909499L	WHEEL GRID 3WP - LH
19	1	0909499R	WHEEL GRID 3WP - RH
20	1	0904156	3-WAY PIVOT L-ARM - LH
21	1	0904157	3-WAY PIVOT L-ARM - RH
22	2	0902382	1 INCH NYLON POLY COAT BASKET STRAP
	2	65287	BASKET TIRE STRAP - MEDIUM-LARGE, BLUE
23	2	65460	3-1/2 INCH FORK HOLDER
24	2	663530	FRAME FORK, 3 INCH CAST
25	2	663545	FRAME FORK SHORT, 4-1/2 INCH CAST
26	1	0940458	REESE HITCH RECEIVER, COMMON GEN2

4,000 LB. UNDERLIFT
GEN 2 LCG

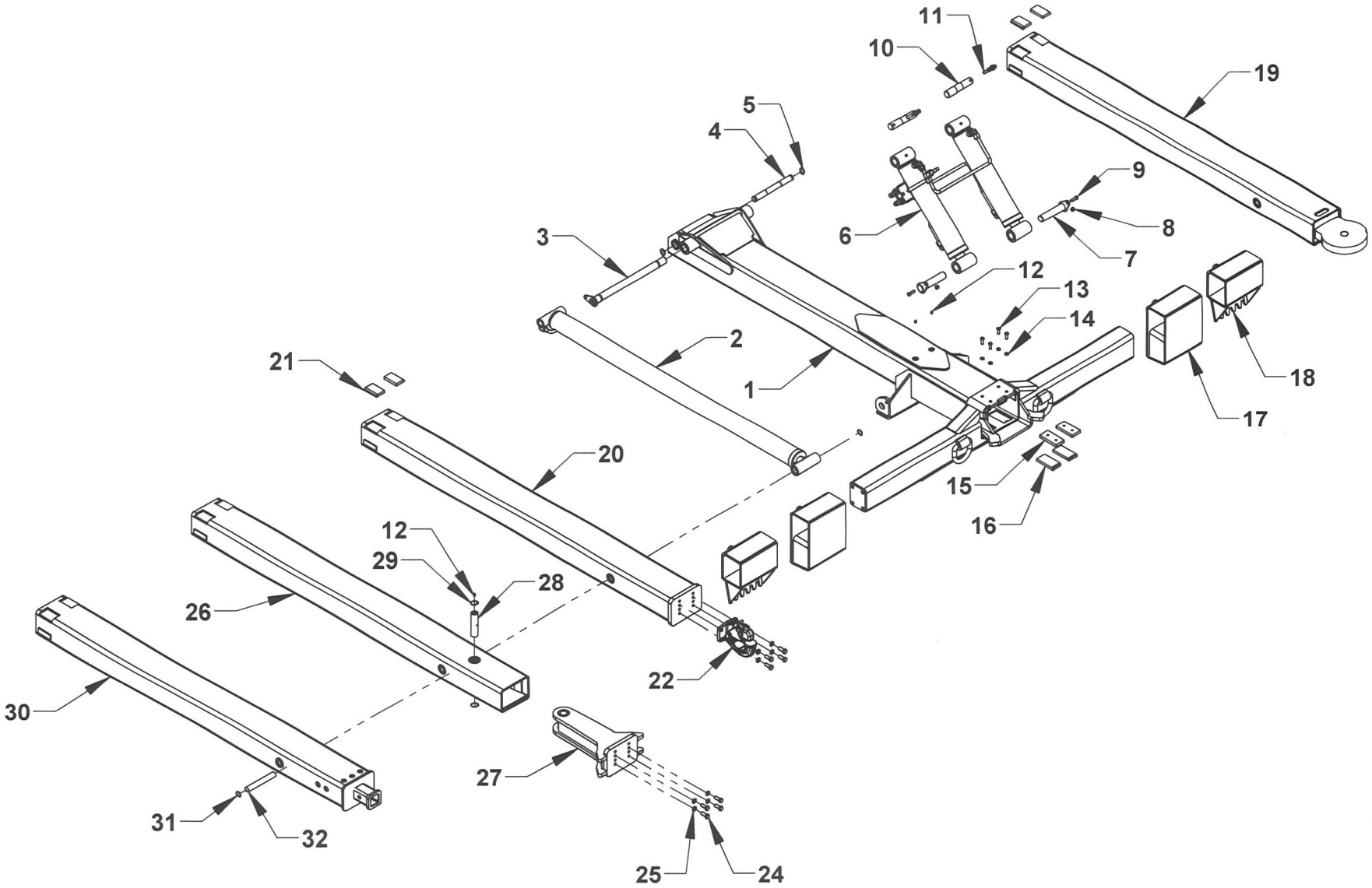

4,000 LB. UNDERLIFT - GEN 2

REF. NO.	. QTY	PART NUMBER	DESCRIPTION
1	1	10270408DS	WHEEL LIFT OUTER BOOM TUBE
2	1	72A30054	WL EXTEND CYLINDER 3.0 BORE x 54 STROKE
3	1	0809411U	WHEEL LIFT BOOM HINGE PIN
4	1	729352	PIN - WHEEL LIFT EXTEND CYLINDER BASE
5	2	86100E	SNAP RING 1' EXTERNAL
6	2	72A33013G	LIFT CYLINDER 3.25 BORE x 13 STROKE
7	2	14710	KEEPER PIN 1.23 x 5.50
8	4	0400392	NYLON LOCK NUT 3/8-16 UNC
9	4	0403154	BOLT, HHCS 3/8-16 UNC x 1-1/4
10	2	13068	PIN - TILT CYLINDER BASE
11	2	84680	KEEPER PIN 3/8 ROD END
12	3	7B130	GREASE FITTING 1/4-28
13	4	0403139	BOLT, BHCS 3/8-16 UNC x 1
14	4	0400482	LOCK WASHER 3/8
15	2	63595H	WEAR PAD NYLATRON NSM 1/2 x 2 x 4 W/HOLES
16	2	63595	WEAR PAD NYLATRON NSM 1/2 x 2 x 4
17	2	0809898-54	DOCK STABILIZER EXTENSION STAND (OPTIONAL)
18	2	0809646-54	DOCK STABILIZER SPADE (OPTIONAL)
19	1	0811159	4K INNER BOOM TUBE
20	1	10244P	4K INNER PINTLE BOOM TUBE
21	2	65613	WEAR PAD 1/2 x 2 x 3 NSM BEVELED
22	1	174017156	PINTLE HOOK ATTACHMENT
23	1	174017159	PINTLE BALL ATTACHMENT
24	4	0400177	BOLT, HEX 1/2-13 UNC x 1-1/4
25	4	0400491	WASHER 1/2 LOCK
26	1	102404-PP	4K INNER BOOM-PIVOTING PINTLE
27	1	143355	PIVOTING PINTLE HEAD WELDMENT - 4K
28	1	143142PP	PIN - PIVOTING PINTLE HEAD 4K
29	2	86125I	SNAP RING 1-1/4 INTERNAL
30	1	10244R	4K INNER BOOM - REESE RECEIVER
31	2	86100I	SNAP RING 1" INTERNAL
32	1	72940	CYLINDER PIN

UNDERLIFT CYLINDER FLUID TUBE GROUP

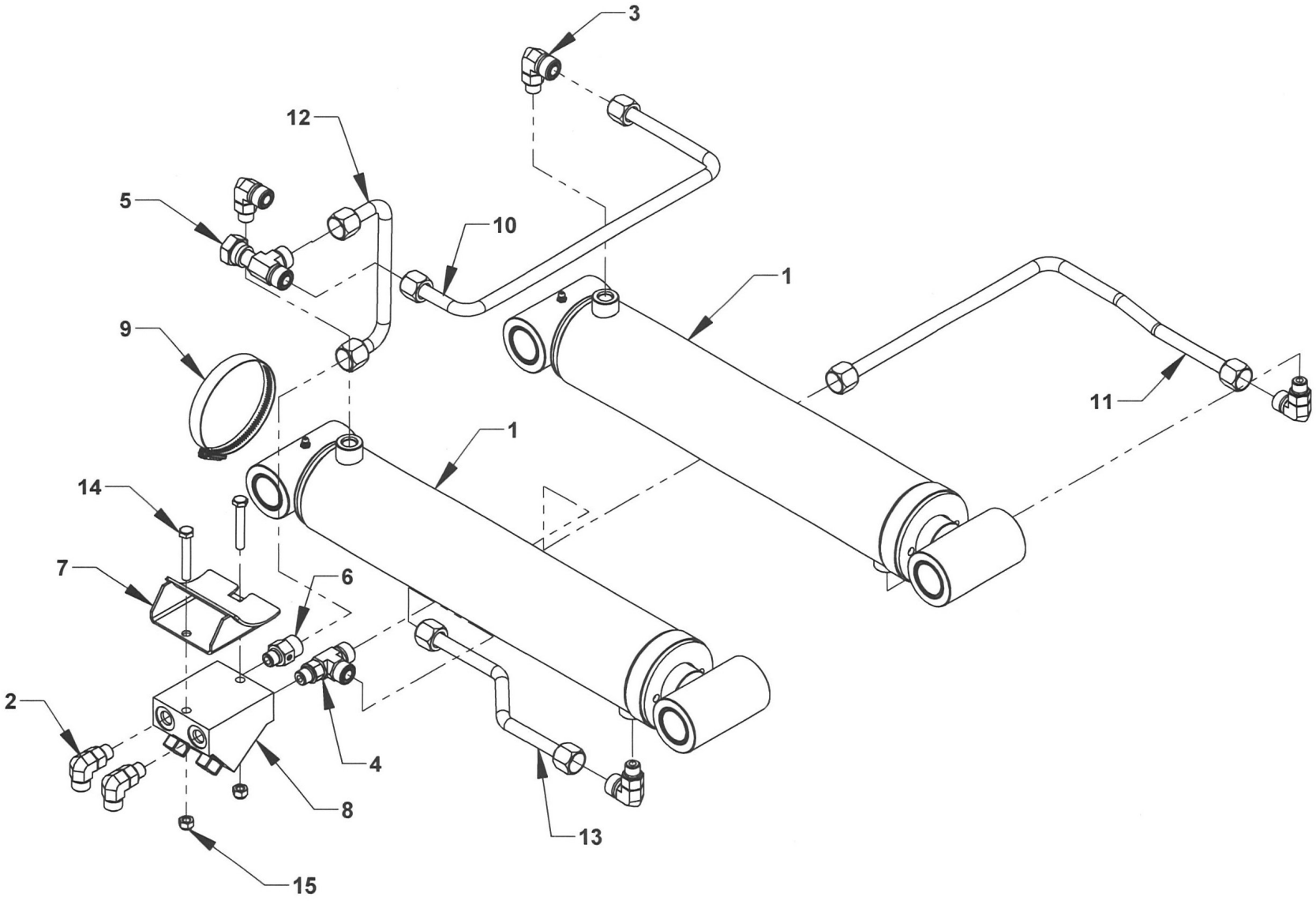

UNDERLIFT CYLINDER FLUID TUBE GROUP

REF. NO.	QTY	PART NUMBER	DESCRIPTION
1	2	72A33013	LIFT CYLINDER 3.25 x 1.75 x 13.00
		75FT33013	FLUID TUBE KIT
2	2	ADPTR-FF1868T0606S	ADAPTER 90 ORS/ORB 6 x 6
3	4	ADPTR-FF1868T0806S	ADAPTER 90 ORS/ORB 8 x 6
4	1	ADPTR-FF1865T0806S	ADAPTER TEE ORS/ORS/ORB 8 x 8 x 6
5	1	ADPTR-FF2114T0808S	ADAPTER TEE ORS 8 x 8
6	1	ADPTR-FF1852T0806	ADAPTER STRAIGHT ORS/ORB 8 x 6
7	1	0809875-325	UNDERLIFT VALVE MOUNTING BRACKET
8	1	74345	DUAL COUNTERBALANCE VALVE CBCG-XVN
9	1	03017065	BAND CLAMP #56, 4 x 9/16 SS
10	1	72H33013L2	UNDERLIFT FLUID TUBE ASSEMBLY - LEFT
11	1	72H33013L1	UNDERLIFT FLUID TUBE ASSEMBLY - LEFT
12	1	72H33013R2	UNDERLIFT FLUID TUBE ASSEMBLY - RIGHT
13	1	72H33013R1	UNDERLIFT FLUID TUBE ASSEMBLY - RIGHT
14	2	0400824	BOLT HHCS 5/16-18 UNC x 1-3/4 GR5 ZINC
15	2	0400382	NYLON LOCK NUT 5/16-18 UNC GR5 ZINC

PIVOT L-ARM RECEIVER GROUP

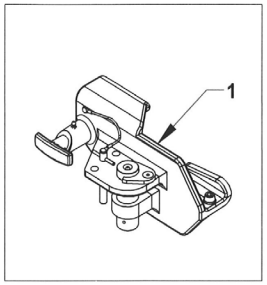

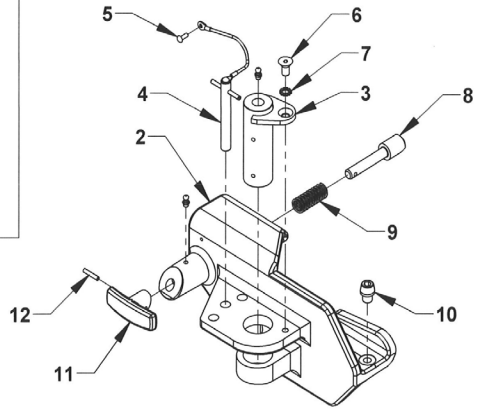

REF	QTY	PART NO.	DESCRIPTION
1	1	09007328L	PIVOT L-ARM RECEIVER GROUP-LH
		09007328R	PIVOT L-ARM RECEIVER GROUP-RH
2	1	0719079	PIVOT L-ARM RECEIVER CASTING-LH
		0719080	PIVOT L-ARM RECEIVER CASTING-RH
3	1	0802187	L-ARM RECEIVER CASTING PIVOT PIN
4	1	0904744	PIN ASSEMBLY
	1	0714415	PIVOT LOCK PIN
	1	0303918	LANYARD
	1	0400044	DRIVE SCREW #10-24 x 1/2 ROUND HEAD
5	1	0400044	DRIVE SCREW #10-24 x 1/2 ROUND HEAD
6	1	0400349	SCREW 3/8-16 x 1/2 FHSC
7	1	0400481	LOCK WASHER 3/8 EXTERNAL TOOTH
8	1	0707505	7/8 CAM PIN
9	1	0302641	CAM PIN SPRING
10	1	0712933	SCREW 1/2-13 x 1/2 TAPERED SOCKET CAP
11	1	0302648	T-HANDLE
12	1	0400559	ROLL PIN 3/16 -1

AUTOGRIP WHEEL LIFT

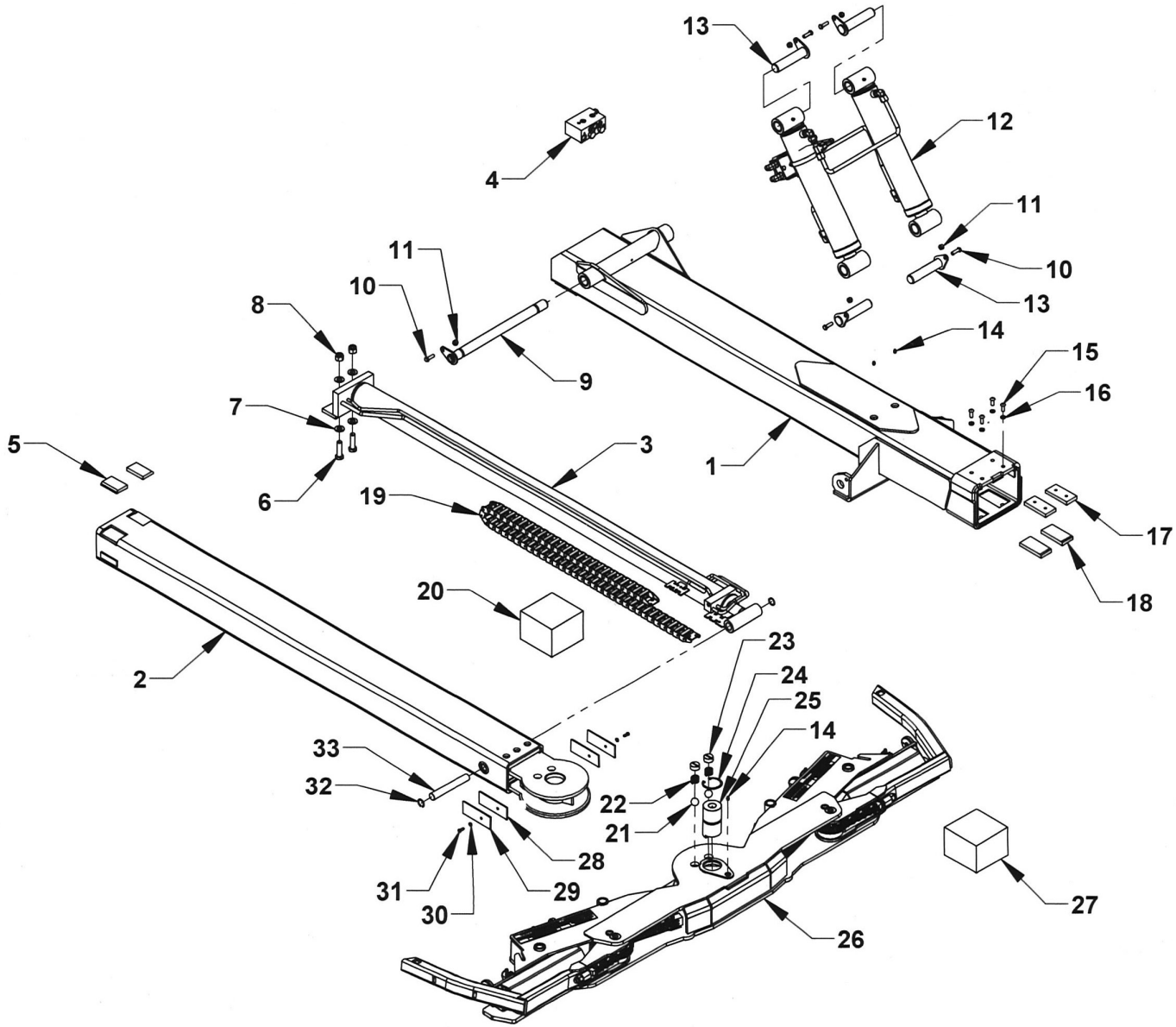

AUTOGRIP WHEEL LIFT

REF NO.	NO REQ'D	PART NUMBER	DESCRIPTION
1	1	10270410	AUTOGRIP OUTER BOOM TUBE - GEN2 LCG 4K
2	1	08021745	AUTOGRIP INNER TUBE GEN3
3	1	72136	AUTOGRIP EXTEND CYLINDER - CARRIER
4	1	74341	FLOW DIVIDER COUNTER BALANCE VALVE
5	2	65613	WEAR PAD 1/2 x 2 x 3 NSM BEVELED
6	2	0403141	BOLT HHCS 5/8-11 UNC x 2-1/4
7	4	0400505	FLAT WASHER 5/8
8	2	0400421	NYLON LOCK NUT 5/8-11 UNC
9	1	0809411U	WHEEL LIFT BOOM HINGE PIN
10	5	0400122	BOLT, HHCS 3/8-16 UNC x 1-1/4
11	5	0400392	NYLON LOCK NUT 3/8-16 UNC
12	2	72A33013G	LIFT CYLINDER 3.25 x 1.75 x 13.00
13	4	14710	KEEPER PIN 1.23 x 4.50
14	3	7B130	GREASE FITTING 1/4-28 UNF
15	4	0403139	BOLT, BHCS 3/8-16 UNC x 1
16	4	0400482	LOCK WASHER 3/8"
17	2	63595H	WEAR PAD NYLATRON NSM 1/2 x 2 x 4 WITH HOLES
18	2	63595	WEAR PAD NYLATRON NSM 1/2 x 2 x 4
19	1	69757	AUTOGRIP HOSE TRACK 58 LINKS
20	1	75048	HOSE KIT IGUS TRACK
21	2	0308129	BALL CHROME 1" GRADE 16/25
22	2	0300066	AUTOGRIP DETENT SPRING GEN2
23	2	643272	AUTOGRIP DETENT SCREW GEN2
24	1	86250I	SNAP RING 2-1/2" INTERNAL
25	1	644402	AUTOGRIP CROSSBAR PIVOT PIN GEN2
26	1	644002CA	AUTOGRIP CROSSBAR GEN2
27	1	75048C	HOSE KIT ARM CYLINDERS
28	2	64304R	RUBBER GASKET FOR 64304C
29	2	64304C	HOSE CLAMP FOR SIDE OF AUTOGRIP II YOKE
30	2	0400452	LOCK WASHER 1/4"
31	2	0403142	BOLT, BUTTON HEAD 1/4-20 x 3/4
32	2	86100I	SNAP RING 1" INTERNAL
33	1	72940	CYLINDER PIN 0.980 x 6-5/8

DOCK STABILIZER

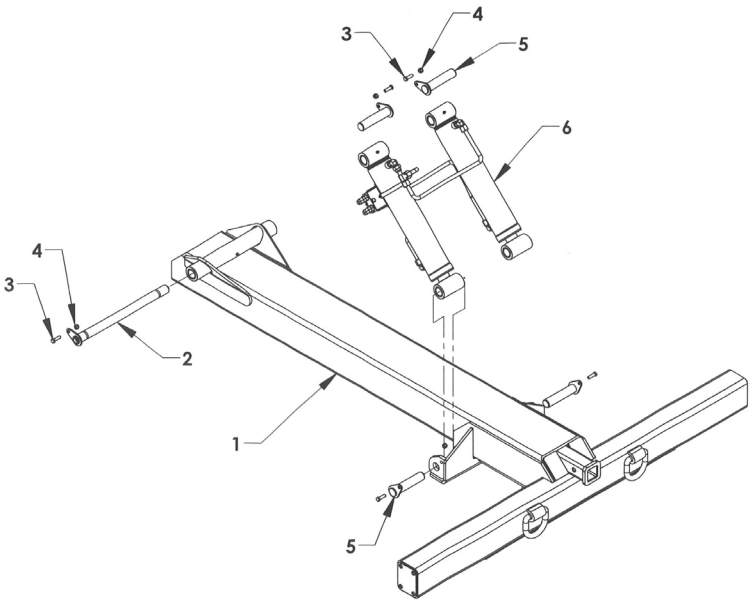

REF NO.	NO REQ'D	PART NUMBER	DESCRIPTION
1	1	0810010-12	DOCK STABILIZER WELDMENT
2	1	0809411U	WHEEL LIFT BOOM HINGE PIN
3	5	0400122	BOLT HHCS, 3/8-16 UNC x 1-1/4
4	5	0400392	NYLON LOCK NUT, 3/8-16 UNC
5	4	14710	KEEPER PIN 1.23 x 5.50
6	2	72A33013G	UNDERLIFT CYL FLUID TUBE GRP

AUTOGRIP DOCK STABILIZER WHEEL LIFT

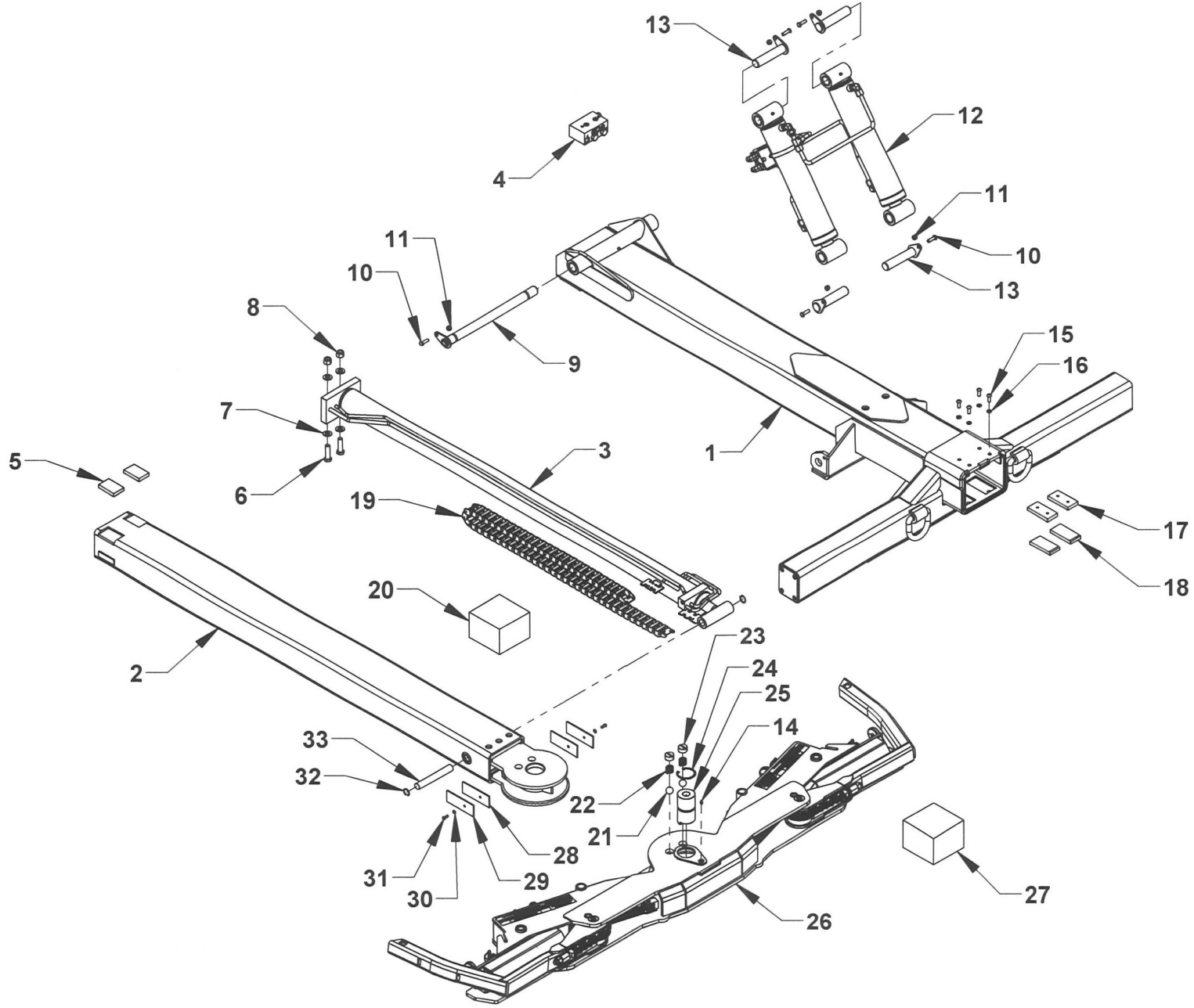

AUTOGRIP DOCK STABILIZER WHEEL LIFT

REF. NO.	QTY	PART NUMBER	DESCRIPTION
1	1	08017311	DOCK STABILIZER AUTOGRIP OUTER BOOM TUBE - 4K
2	1	08021745	AUTOGRIP INNER TUBE GEN3
3	1	72136	AUTOGRIP EXTEND CYLINDER - CARRIER
4	1	74341	FLOW DIVIDER COUNTER BALANCE VALVE
5	2	65612	WEAR PAD 1/2 x 2 x 3 NSM
6	2	0403141	BOLT, HHCS 5/8-11 UNC x 2-1/4
7	4	0400505	FLAT WASHER 5/8
8	2	0400421	NYLON LOCK NUT 5/8-11 UNC
9	1	0809411U	WHEEL LIFT BOOM HINGE PIN
10	5	0400122	BOLT HHCS 3/8-16 UNC x 1-1/4
11	5	0400392	NYLON LOCK NUT 3/8-16 UNC
12	2	72A33013	LIFT CYLINDER 3.25 x 1.75 x 13.00
13	4	14710	KEEPER PIN 1.23 x 4.50
14	3	7B130	GREASE FITTING 1/4-28 UNF
15	4	0403139	BOLT BHCS 3/8-16 UNC x 1
16	4	0400482	LOCK WASHER 3/8
17	2	63595H	WEAR PAD NYLATRON NSM 1/2 x 2 x 4 W/HOLES
18	2	63595	WEAR PAD NYLATRON NSM 1/2 x 2 x 4
19	1	69757	AUTOGRIP HOSE TRACK 58 LINKS
20	1	75048	HOSE KIT IGUS TRACK
21	2	0308129	BALL CHROME 1 IN. (GRADE 16/25)
22	2	0300066	AUTOGRIP DETENT SPRING GEN2
23	2	643272	AUTOGRIP DETENT SCREW GEN2
24	1	86250I	SNAP RING 2-1/2 INTERNAL
25	1	644402	AUTOGRIP CROSSBAR PIVOT PIN GEN2
26	1	644002CA	AUTOGRIP CROSSBAR GEN2
27	1	75048C	HOSE KIT ARM CYLINDERS
28	2	64304R	RUBBER GASKET FOR 64304C
29	2	64304C	HOSE CLAMP FOR SIDE OF AUTOGRIP II YOKE
30	2	0400452	LOCK WASHER 1/4
31	2	0403142	BOLT BHCS 1/4-20 x 3/4
32	2	86100I	SNAP RING 1" INTERNAL
33	1	72940	CYLINDER PIN 0.980 x 6-5/8

AUTOGRIP II COMPONENTS

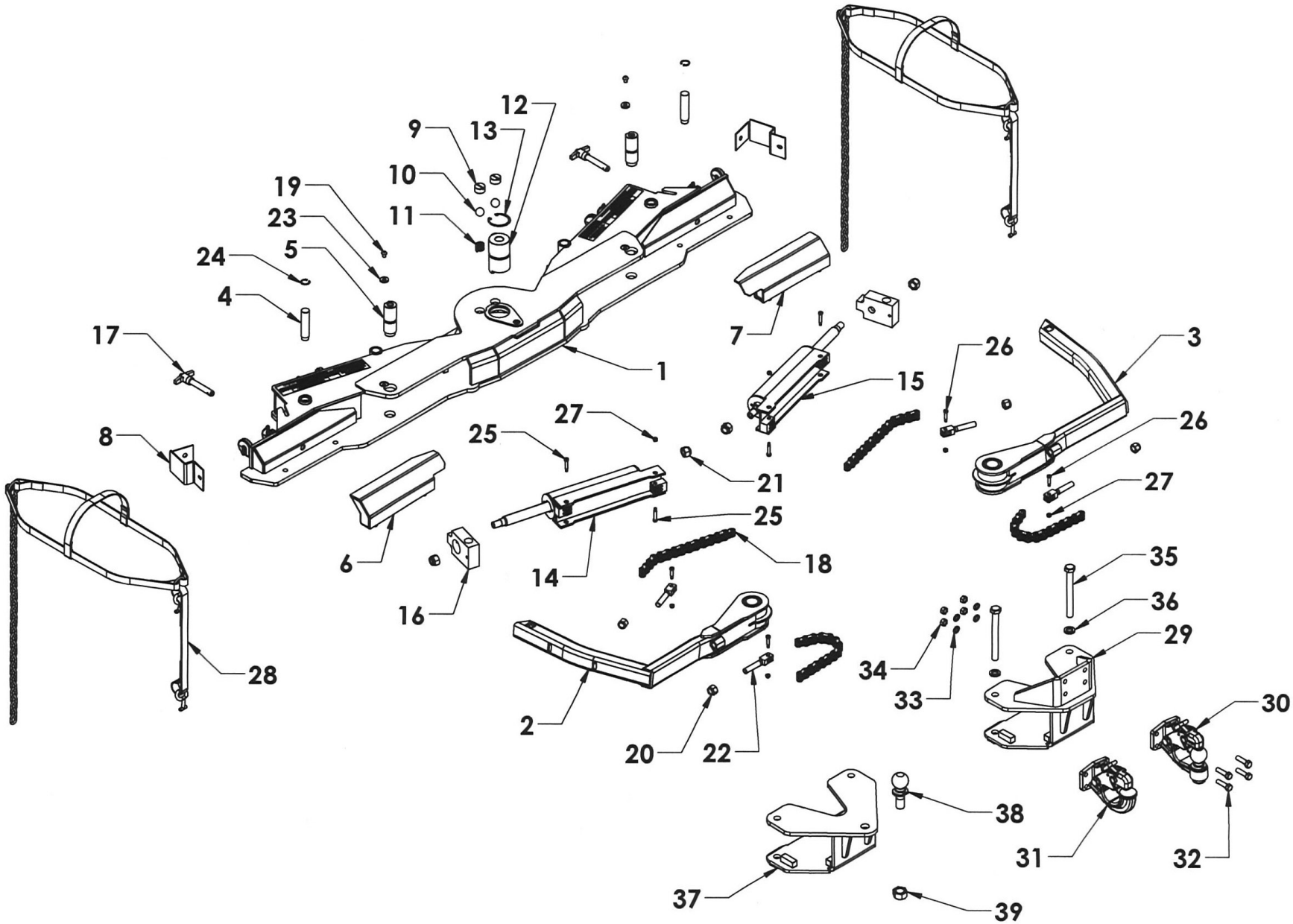

AUTOGRIP II COMPONENTS

REF NO.	NO REQ'D	PART NUMBER	DESCRIPTION
1	1	644002	CROSSBAR WELDMENT
2	1	644352CL	WHEEL RETAINER - LH
3	1	644352CR	WHEEL RETAINER - RH
4	2	644432	WHEEL RETAINER CYLINDER PIN
5	2	644452	ARM PIVOT PIN
6	1	697402L	WHEEL SPACER - LH
7	1	697402R	WHEEL SPACER - RH
8	2	644292	HOSE GUARD
9	2	643272	SCREW-PLUG CROSSBAR DETENT
10	2	0308129	BALL CHROME 1" (GRADE 16/25)
11	2	03000066	AUTOGRIP GEN2 DETENT SPRING
12	1	644402	CROSSBAR PIN
13	1	862501	SNAP RING 2.500 INCH INTERNAL
14	2	720152L	WHEEL RETAINER CYLINDER - LH
15	2	720152R	WHEEL RETAINER CYLINDER - RH
16	2	727162	L-ARM CYLINDER END BLOCK
17	2	84291	T-PIN 5/8 x 3
18	4	87440	AUTOGRIP ARM CHAIN
19	2	0403140	BOLT HGCS 3/8-16 UNC x 1/2
20	4	0400421	5/8-11 NYLON LOCK NUT
21	4	0400430	3/4-10 NYLON LOCK NUT
22	4	64441	CHAIN CLEVIS
23	2	0720463	WASHER PIVOT PIN RETAINER - 3/8
24	2	86100I	SNAP-RING 1.000 INCH INTERNAL
25	4	0403163	BOLT SHCS 5/16 x 1-1/4 SHOULDER 1/4-20
26	4	0403164	BOLT SHCS 5/16 x 1 SHOULDER 1/4-20
27	8	0400367	NYLON LOCK NUT 1/4-20
28	2	0902382	1 INCH NYLON POLY COAT BASKET STRAP
		65287	BLUE BASKET TIRE STRAP - TRUCK (OPT)
29	1	694520	AUTOGRIP PINTLE ADAPTOR (OPTIONAL)
30	1	174017159	PINTLE BALL ATTACHMENT (OPTIONAL)
31	1	174017156	PINTLE HOOK ATTACHMENT (OPTIONAL)
32	4	0403058	BOLT, HHCS 1/2-13 x 1-3/4 GR8
33	4	0400491	LOCK WASHER, 1/2
34	4	0400407	HEX NUT 1/2-13 UNC
35	2	0403092	BOLT, HHCS 3/4-10 UNC x 7 GR8
36	2	0403082	LOCK WASHER 3/4
37	1	08011929	AUTOGRIP TOWBALL ADAPTOR (OPTIONAL)
38	1	03004649	TOWBALL
39	1	83711	NUT 1.000" RAMCO LOCK

INBOARD TILT CYLINDERS

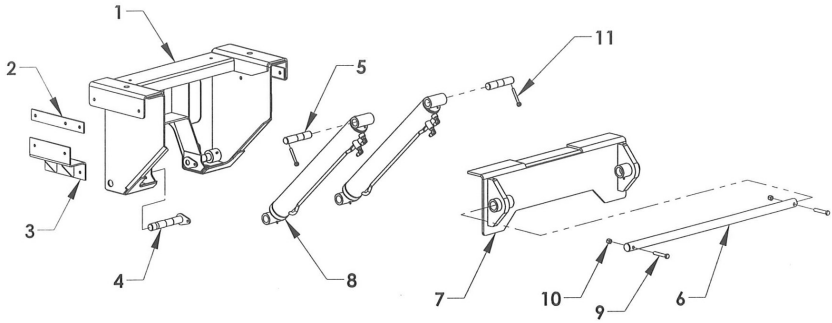

REF	PART #	DESCRIPTION	QTY
1	1A8002	INBOARD SADDLE	1
2	1A821S	SADDLE SHIM	2
3	1A925	FRAME MOUNTING BRACKET	2
4	1A828A	INBOARD SADDLE TILT PIN	2
5	13068	PIN - TILT CYLINDER BASE	2
6	0750952	HINGE PIN - 1-1/2 x 41-3/8	1
7	0809533	HINGE ANGLE	1
8	721092	CYLINDER - CARRIER TILT	2
9	0403159	BOLT 1/2-20 UNF x 3 GRADE 5	2
10	0403160	NYLON LOCK NUT 1/2-20 UNF	2
11	84680	PIN EYE	2

12 LCG INBOARD TILT CYLINDERS OUTBOARD SADDLES (OPTIONAL)

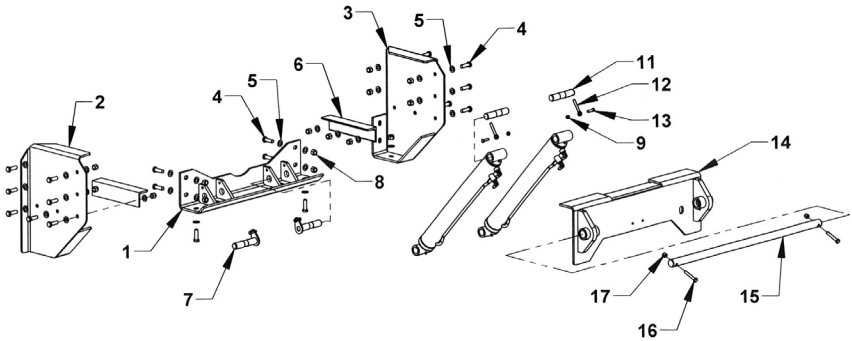

REF	PART#	QTY	DESCRIPTION
1	1A560	1	SADDLE CONNECTING ANGLE
2	1A540L	1	OUTBOARD SADDLE, LH
3	1A540R	1	OUTBOARD SADDLE, RH
4	0400274	20	BOLT, HHCS 5/8-11 UNC x 2
5	0400505	40	FLAT WASHER 5/8
6	1A743	2	SADDLE MOUNTING ANGLE
7	1A525	2	OUTBOARD SADDLE TILT PIN
8	0400421	20	5/8-11 NYLOCK NUT Z
9	0400392	4	NYLON LOCK NUT 3/8-16 UNC
10	721092	2	TILT CYLINDER 3 BORE x 23 STROKE
11	13068	2	PIN - TILT CYLINDER BASE
12	84680	2	PIN EYE
13	0400132	4	BOLT, HHCS 3/8-16 UNC x 1-1/2
14	0809533	1	HINGE ANGLE
15	0750952	1	HINGE PIN - 1-1/2 x 41-3/8
16	0403159	2	BOLT, HHCS 1/2-20 x 3 Z
17	0403160	2	NYLON LOCK NUT 1/2-20 UNC

12 GAL. INBOARD OIL RESERVOIR GROUP-763100G

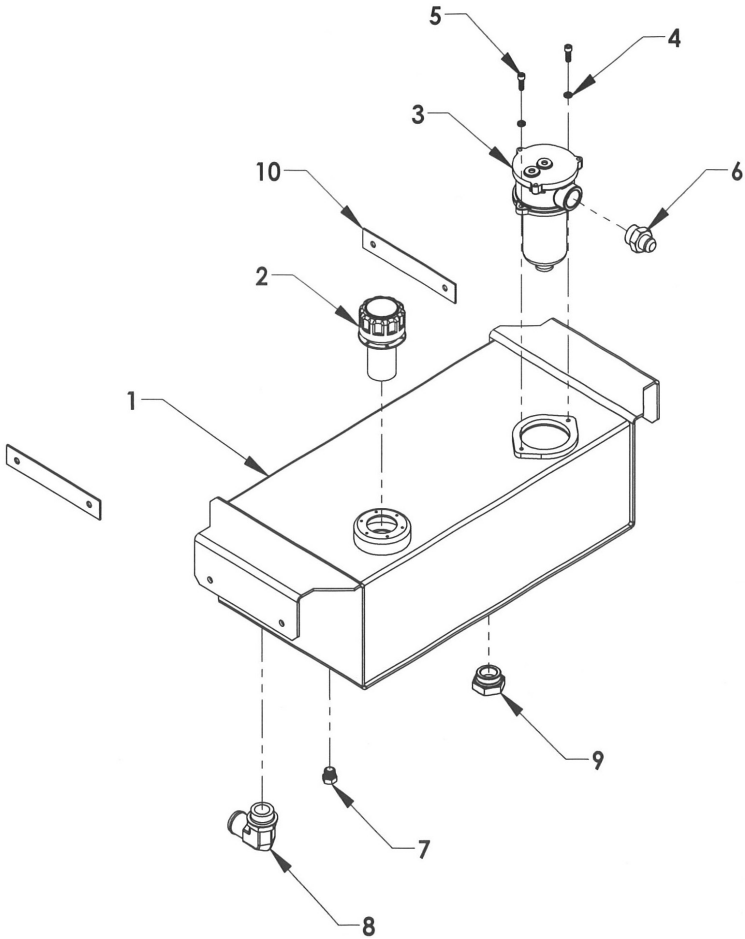

REF	PART #	QTY	DESCRIPTION
1	763100	1	INBOARD OIL RESERVOIR WELDMENT
2	76213	1	FILLER BREATHER CAP
3	76270	1	FILTER ASSEMBLY
	76271	1	REPLACEMENT FILTER ELEMENT
4	0402118	2	LOCK WASHER 5/16 SS
5	04001427	2	BH CAP CREW 5/16-18 UNC x 7/8 SS
6	0301368	1	ADAPTOR 202702-16 x 12
7	03006085	1	ADAPTOR 900598 (DRAIN PLUG)
8	77C92	1	20 x 24 SUCTION HOSE FITTING 90 °
9	77620	1	ADAPTOR 900598-20 (DRAIN PLUG)
10	763106	2	FRAME WIDTH SHIM

14 GAL. OUTBOARD OIL TANK GROUP

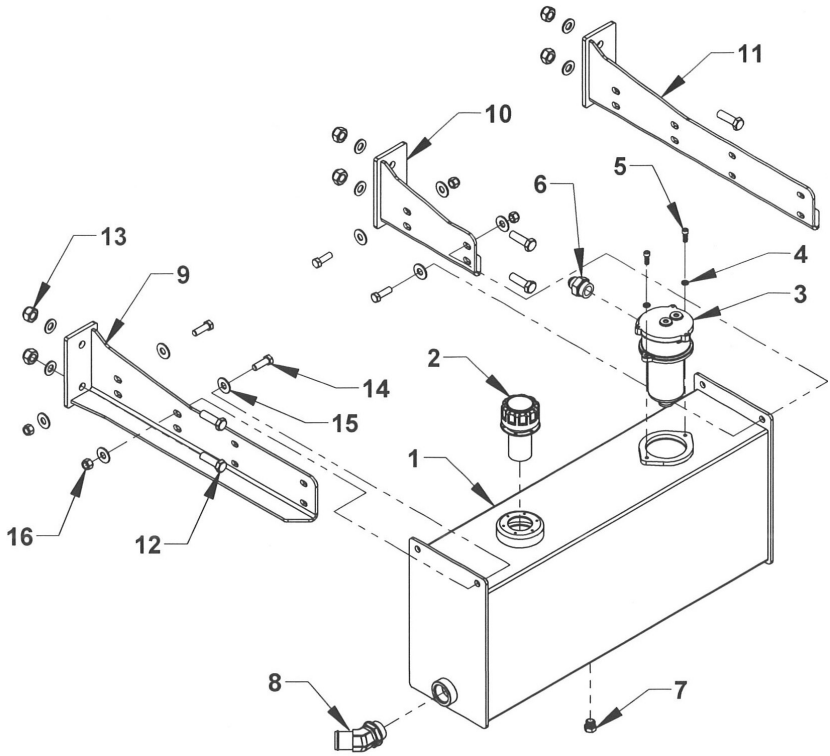

REF	PART#	QTY	DESCRIPTION
1	762110G	1	14 GAL. OUTBOARD OIL TANK WELDMENT
2	76213G	1	FILLER BREATHER CAP ASSEMBLY
3	76270	1	FILTER ASSEMBLY
	76271	1	REPLACEMENT FILTER ELEMENT
4	0402118	2	LOCK WASHER 5/16 SS
5	04001427	2	BHCS SCHS 5/16-18 UNC x 7/8 SS
6	0301368	1	ADAPTOR 202702 16 x 12
7	03006085	1	ADAPTOR 900598-8 (MAGNETIC DRAIN PLUG)
8	03006341	1	20 x 24 SUCTION HOSE FITTING 45°
9	37855R	1	TANK MTG. BRACKET - RH
	37858R	1	TANK MTG. BRACKET (SHORT) - RH
10	37858L	1	TANK MTG. BRACKET (SHORT) -LH
11	37855L	1	TANK MTG. BRACKET - LH
12	0400274	6	BOLT 5/8-11 x 2 UNC GR8
13	0400426	6	NYLON LOCK NUT 5/8-11 UNC ZINC PLATED
14	0400181	6	BOLT 1/2-13 UNC x 1-1/2 GR5
15	0400492	8	FLAT WASHER 1/2 ZINC PLATED
16	0403100	4	NYLON LOCK NUT 1/2-13 UNC ZINC PLATED

DIRECT MOUNT PUMP - 18 GPM

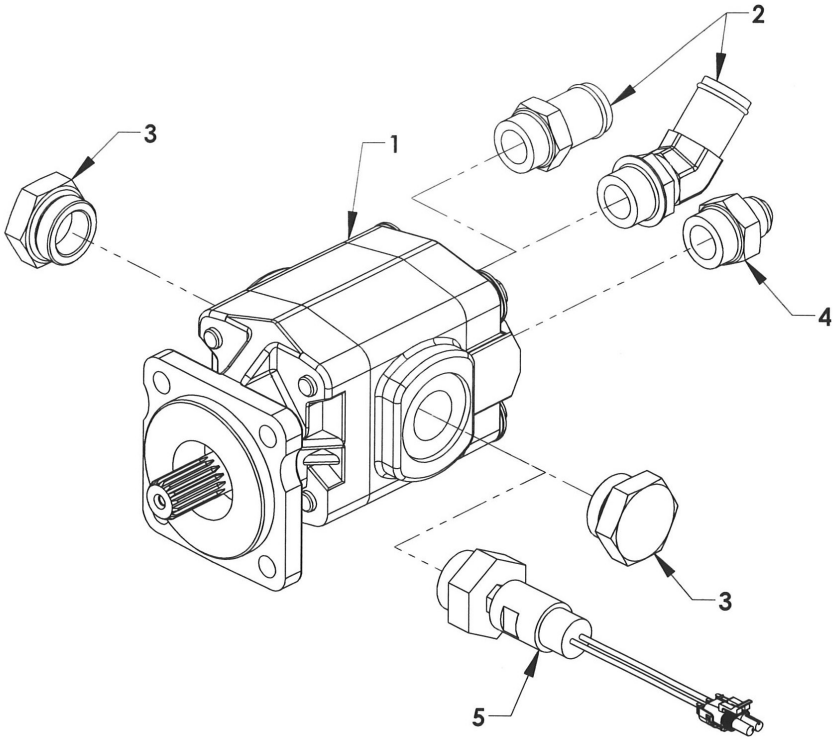

REF	PART #	QTY	DESCRIPTION
1	0320144	1	18 GPM , 1 IN.15 SPLINE SHAFT, SAE 4-BOLT FLANGE
2	03006339	1	#16-45 M O-RING x 1-1/4 M NIPPLE
	77C82	1	#16 M O-RING x 1-1/4 M NIPPLE
3	77620	2	1-1/4 O-RING PLUG 900598-20
4	0301368	1	#16 M O-RING x 3/4 MJIC
5	0909434	1	PRESSURE TRANSDUCER (OPTIONAL)

2 AIR VALVE CONTROL STATION

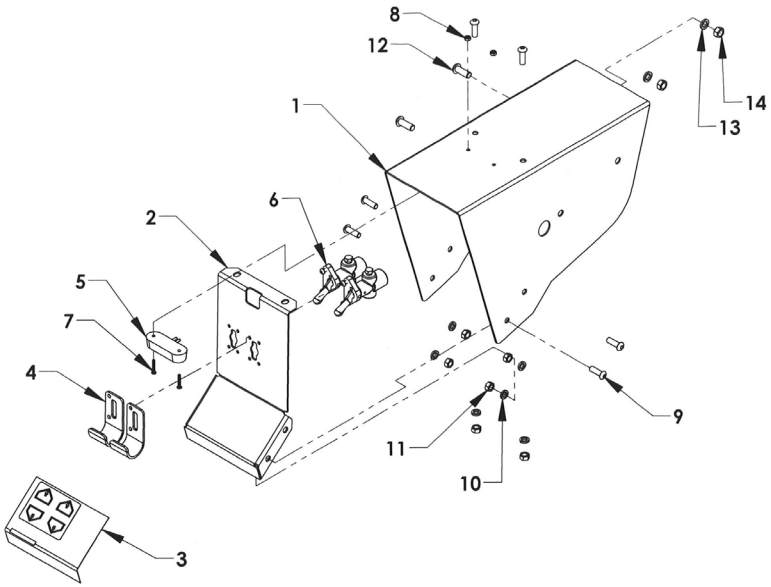

REF.	PART #	QTY	DESCRIPTION
1	0752655	1	2-TOGGLE AIR VALVE CONTROL HOOD
2	0752656L	1	2-TOGGLE AIR VALVE CONTROL PANEL - LEFT
	0752656R	1	2-TOGGLE AIR VALVE CONTROL PANEL - RIGHT
3	18221L	1	2-TOGGLE AIR VALVE CONTROL PLACARD - LEFT
	18221R	1	2-TOGGLE AIR VALVE CONTROL PLACARD - RIGHT
	18238L		2-TOGGLE AIR DUAL WINCH CONTROL PLACARD - LEFT
	18238R		2-TOGGLE AIR DUAL WINCH CONTROL PLACARD - RIGHT
4	18145	2	TOGGLE AIR GUARD
5	0320161	1	CONTROL LIGHT
6	71716	2	TOGGLE AIR VALVE
7	04000281	2	SCREW PRH #6-32 UNC x 7/8 SS
8	0403147	2	NUT, NYLON #6-32 UNC SS
9	0403079	6	BOLT BHCS 5/16-18 UNC x 1 SS
10	0402118	6	LOCK WASHER 5/16 SS
11	0403074	6	NUT,NYLON 5/16-18 UNC SS
12	04001085	2	BOLT HHCS 3/8-16 UNC x 1 SS
13	0402121	2	LOCK WASHER 3/8-16 SS
14	0402122	2	NUT, NYLON 3/8-16 UNC

6-SPOOL CONTROL STATION

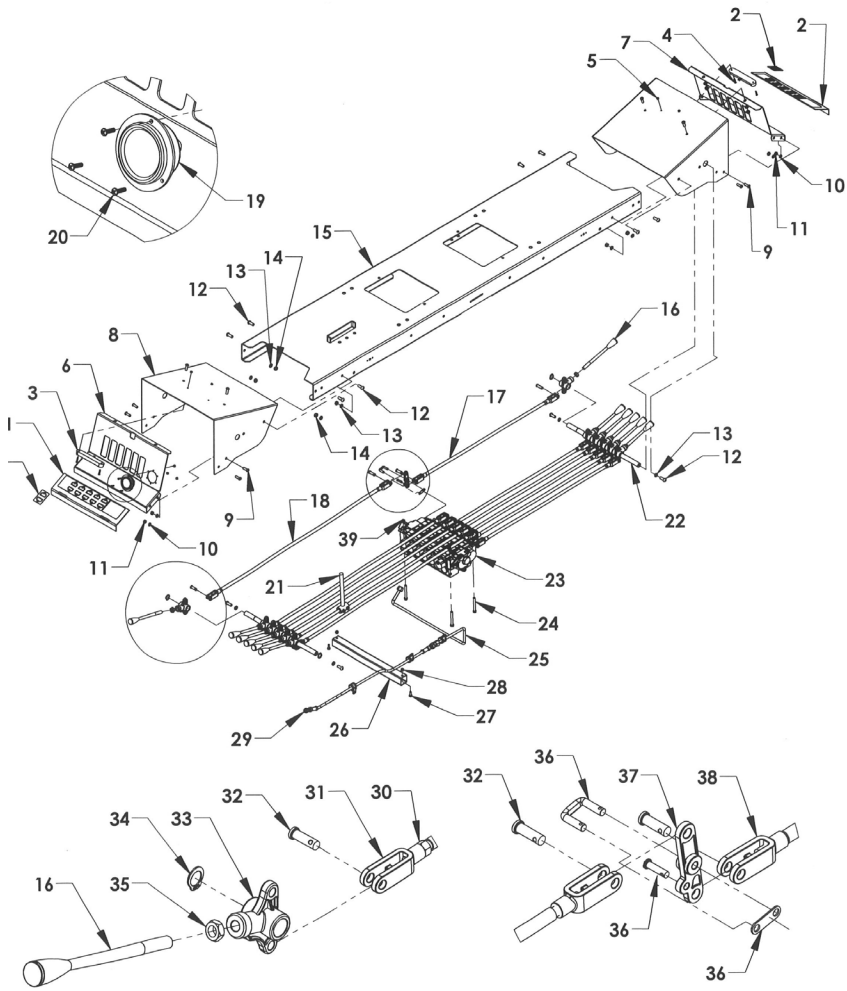

6-SPOOL CONTROL STATION

REF. NO.	NO. REQ'D	PART NUMBER	DESCRIPTION
1	1	18212L	5 SPOOL/6 SPOOL CONTROL PLACARD-LH
	1	18237	CONTROL PLACARD AUTOGRIP OVERLAY
2	1	18212R	5 SPOOL/6 SPOOL CONTROL PLACARD-RH
	1	18237	CONTROL PLACARD AUTOGRIP OVERLAY
3	2	0320162	LED CONTROL STATION LIGHT - 6 IN.
4	4	04000281	SCREW, PHILLIPS #6-32 UNC x 7/8
5	7	04000262	NYLON LOCK NUT #6-32 SS
6	1	0752652L	CONTROL PANEL - LH
7	1	0752652R	CONTROL PANEL - RH
8	2	0752651	CONTROL HOOD
9	12	0403079	BHCS 5/16-18 UNC x 5/8
10	12	0402118	LOCK WASHER 5/16 SS
11	12	0403074	HEX NUT 5/16-18 UNC
12	12	04001085	BHCS 3/8-16 UNC x 1 SS
13	12	0402121	LOCK WASHER 3/8 SS
14	8	0402122	NYLON LOCK NUT 3/8-16 UNC
15	1	181286W	CONTROL BOX ARM WELDMENT - 79.5 IN
16	6	0320048-GY	CONTROL HANDLE 8" - GRAY
	2	0320048-RD	CONTROL HANDLE 8" - RED
	4	0320048-BL	CONTROL HANDLE 8" - BLUE
17	6	7A528W	CONTROL ROD 28-1/2
18	6	7A538W	CONTROL ROD 37-3/4
19	1	0320157	PRESSURE GAUGE HYDRAULIC - 2 IN.
20	6	04000282	SCREW PHILLIPS #6-32 x 1/2
21	1	0809904	ANTI-TILT CONTROL ROD WELDMENT
22	2	7A5753-17	CONTROL HANDLE CROSS ROD 3/4 x 17
23	1	74116	VALVE BODY GRESEN 6 SPOOL
	1	74115	VALVE BODY GRESEN 5 SPOOL (COMMON)
24	3	0403169	HHCS 5/16-18 UNC x 2-3/4
25	1	0752718-5	CONTROL STATION GAUGE FLUID TUBE - 5 SP
	1	0752718-6	CONTROL STATION GAUGE FLUID TUBE - 6 SP
26	1	18335	CONTROL STATION WIRE TUBE - 6 SP
27	2	0400066	HHCS 1/4-20 UNC x 3/4
28	2	0400367	NYLON LOCK NUT 1/4-40 UNC
29	1	0320169	PRESSURE GAUGE HOSE
30	12	0403115	NUT 3/8-24 UNF RH
31	12	84530	CLEVIS - RIGHT HAND THREAD
32	24	84620	CLEVIS PIN 3/8 x 1-1/8
33	12	7A1155	CONTROL HANDLE PIVOT BASE
34	4	86075E	SNAP RING 3/4 EXTERNAL
35	12	0400410	1/2-13 UNC JAM NUT ZP
36	6	7A010	CLEVIS PIN AND LINK ASSEMBLY
37	6	7A121	BELL CRANK
38	12	84540	CLEVIS - LEFT HAND THREAD
39	3	0400382	NYLON LOCK NUT 5/16-18 UNC

9-SPOOL CONTROL STATION

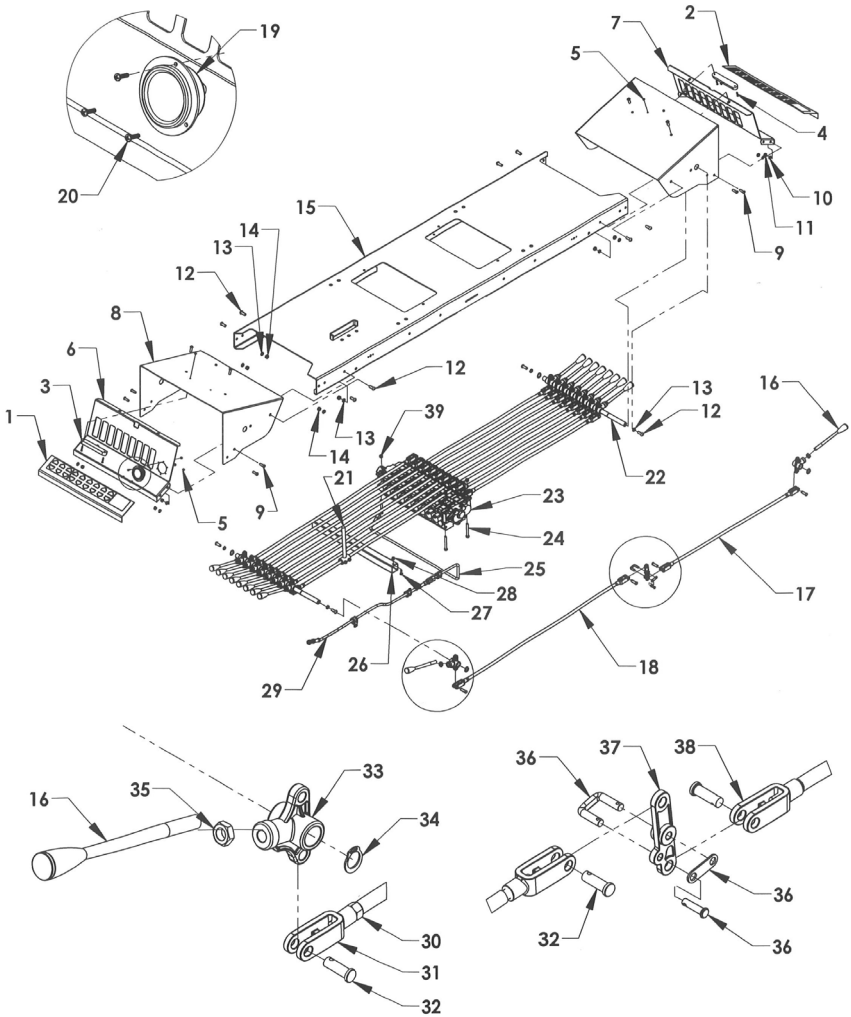

9-SPOOL CONTROL STATION

REF. NO.	NO. REQ'D	PART NUMBER	DESCRIPTION
1	1	18219L	CONTROL PLACARD 4-CAR AUTOGRIP-LH
	1	18218L	CONTROL PLACARD 4-CAR-LH
	1	18224L	CONTROL PLACARD SIDEPULLER OVERLAY-LH
	1	18235L	CONTROL PLACARD DUAL DECK - LH
	1	18236L	CONTROL PLACARD DUAL DECK AG OVERLAY-LH
2	1	18219R	CONTROL PLACARD 4-CAR AUTOGRIP RH
	1	18218R	CONTROL PLACARD 4-CAR-RH
	1	18224R	CONTROL PLACARD SIDEPULLER OVERLAY-RH
	1	18235R	CONTROL PLACARD DUAL DECK-RH
	1	18236R	CONTROL PLACARD DUAL DECK AG OVERLAY-RH
3	2	0320162	LED CONTROL STATION LIGHT - 6 IN.
4	4	04000281	SCREW, PHILLIPS #6-32 UNC x 7/8
5	7	04000262	NYLON LOCK NUT #6-32 SS
6	1	0752654L	CONTROL PANEL - LH
7	1	0752654R	CONTROL PANEL - RH
8	2	0752653	CONTROL HOOD
9	12	0403079	BHCS 5/16-18 UNC x 5/8
10	12	0402118	LOCK WASHER 5/16 SS
11	12	0403074	HEX NUT 5/16-18 UNC
12	12	04001085	BHCS 3/8-16 UNC x 1 SS
13	12	0402121	LOCK WASHER 3/8 SS
14	8	0402122	NYLON LOCK NUT 3/8-16 UNC
15	1	181289W	CONTROL BOX ARM WELDMENT - 79.5 IN
16	6	0320048-GY	CONTROL HANDLE 8" - GRAY
	4	0320048-RD	CONTROL HANDLE 8" - RED
	6	0320048-BL	CONTROL HANDLE 8" - BLUE
	2	0320048-GR	CONTROL HANDLE 8" - GREEN
17	9	7A528W	CONTROL ROD 28-1/2
18	9	7A538W	CONTROL ROD 37-3/4
19	1	0320157	PRESSURE GAUGE HYDRAULIC - 2 IN.
20	3	04000282	SCREW PHILLIPS #6-32 x 1/2
21	1	0809904	ANTI-TILT CONTROL ROD WELDMENT
22	2	7A5753-20	CONTROL HANDLE CROSS ROD 3/4 x 20-3/4
23	1	74118	VALVE BODY GRESEN 8-SPOOL
	1	74119	VALVE BODY GRESEN 9 SPOOL
24	3	0403169	HHCS 5/16-18 UNC x 2-3/4
25	1	0752718-8	CONTROL STATION GAUGE FLUID TUBE - 8 SP
	1	0752718-9	CONTROL STATION GAUGE FLUID TUBE - 9 SP
26	1	18336	CONTROL STATION WIRE TUBE - 9 SPOOL
27	2	0400366	HHCS 1/4-20 UNC x 3/4
28	2	0400367	NYLON LOCK NUT 1/4-20 UNC
29	1	0320169	PRESSURE GAUGE HOSE
30	18	0403115	NUT 3/8-24 UNF RH
31	18	84530	CLEVIS - RIGHT HAND THREAD
32	36	84620	CLEVIS PIN 3/8 x 1-1/8
33	18	7A1155	CONTROL HANDLE PIVOT BASE
34	4	86075E	SNAP RING 3/4 EXTERNAL
35	18	0400410	1/2-13 UNC JAM NUT ZP
36	9	7A010	CLEVIS PIN AND LINK ASSEMBLY
37	9	7A121	BELL CRANK
38	18	84540	CLEVIS - LEFT HAND THREAD
39	3	0400382	NYLON LOCK NUT 5/16-18 UNC

REMOTE AIR CYLINDERS 6-SPOOL

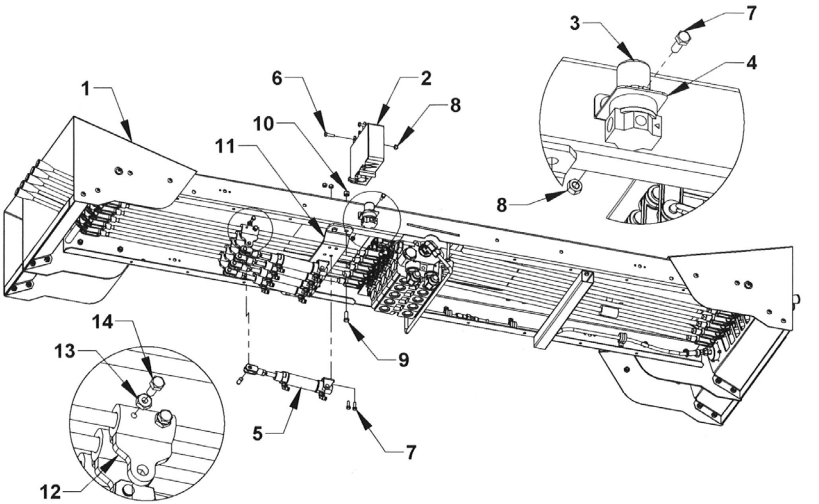

REF. NO.	QTY	PART NUMBER	DESCRIPTION
1	1	183126	6-SPOOL CONTROL STATION
2	1	0308726-2	RADIO CONTROL RECEIVER BOX 2-FUNCTION
		0308726-4	RADIO CONTROL RECEIVER BOX 4-FUNCTION
		0308726-6	RADIO CONTROL RECEIVER BOX 6-FUNCTION
		0308726-8	RADIO CONTROL RECEIVER BOX 8-FUNCTION
		0308726-10	RADIO CONTROL RECEIVER BOX 10-FUNCTION
		0308726-12	RADIO CONTROL RECEIVER BOX 12-FUNCTION
		0308726-16	RADIO CONTROL RECEIVER BOX 16-FUNCTION
3	1	71713	AIR PRESSURE REGULATOR
4	1	0752351	AIR PRESSURE REGULATOR MTG BRACKET
5	X	0308711	AIR CYLINDER 2 INCH STROKE
6	3	0403043	BOLT HHCS 1/4-20 UNC x 1 GR5
7	X	0400066	BOLT HHCS 1/4-20 UNC x 3/4 GR5
8	X	0400367	NUT NYLOK 1/4-20 UNC
9	4	0400126	BOLT HHCS 3/8-18 UNC x 1 GR5
10	4	0400392	NUT NYLOC 3/8-16 UNC
11	1	181381	AIR CYLINDER MTG BRKT 6-SPOOL GEN2
12	X	0809905	BOLT-ON AIR CYLINDER PLATE WELDMENT
13	X	0400366	NUT HEX 1/4-20 UNC
14	X	0400059	BOLT HHCS 1/4-20 UNC x 5/8 GR5

REMOTE AIR CYLINDERS 9-SPOOL

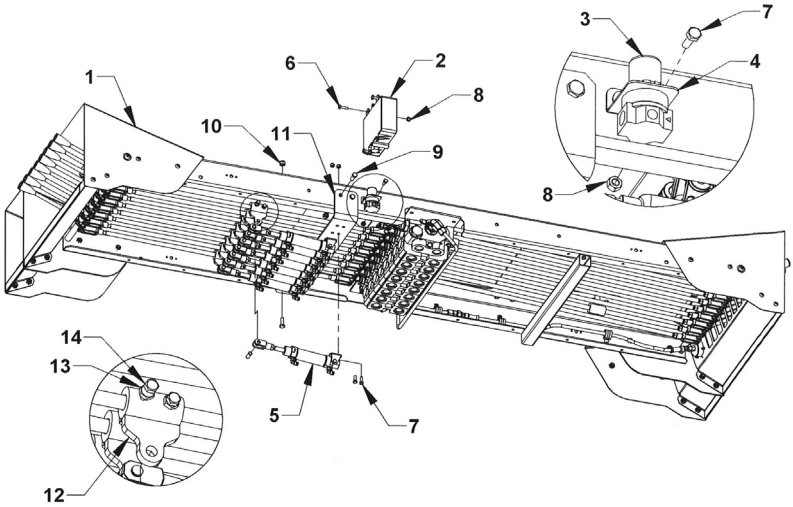

REF. NO.	. QTY	PART NUMBER	DESCRIPTION
1	1	183129	9-SPOOL CONTROL STATION
2	1	0308726-2	RADIO CONTROL RECEIVER BOX 2-FUNCTION
		0308726-4	RADIO CONTROL RECEIVER BOX 4-FUNCTION
		0308726-6	RADIO CONTROL RECEIVER BOX 6-FUNCTION
		0308726-8	RADIO CONTROL RECEIVER BOX 8-FUNCTION
		0308726-10	RADIO CONTROL RECEIVER BOX 10-FUNCTION
		0308726-12	RADIO CONTROL RECEIVER BOX 12-FUNCTION
		0308726-16	RADIO CONTROL RECEIVER BOX 16-FUNCTION
3	1	71713	AIR PRESSURE REGULATOR
4	1	0752351	AIR PRESSURE REGULATOR MTG BRACKET
5	X	0308711	AIR CYLINDER 2 INCH STROKE
6	3	0403043	BOLT HHCS 1/4-20 UNC x 1 GR5
7	X	0400066	BOLT HHCS 1/4-20 UNC x 3/4 GR5
8	X	0400367	NUT NYLOK 1/4-20 UNC
9	4	0400126	BOLT HHCS 3/8-18 UNC x 1 GR5
10	4	0400392	NUT NYLOK 3/8-16 UNC
11	1	181391	AIR CYLINDER MTG BRKT 9-SPOOL GEN2
12	X	0809905	BOLT-ON AIR CYLINDER PLATE WELDMENT
13	X	0400366	NUT HEX 1/4-20 UNC
14	X	0400059	BOLT HHCS 1/4-20 UNC x 5/8 GR5

RAMSEY 234 HYDRAULIC WINCH

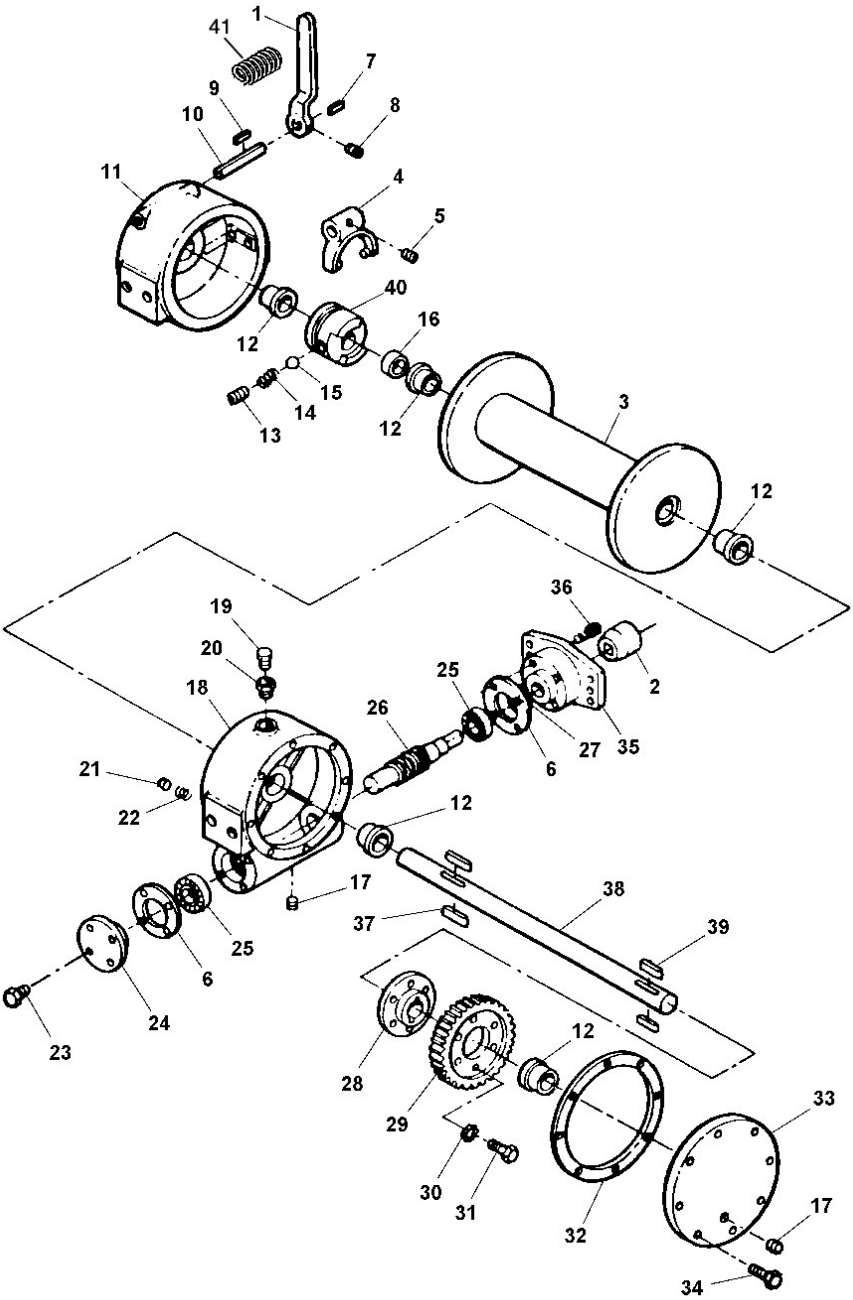

RAMSEY 234 HYDRAULIC WINCH

REF. NO.	NO. REQ'D	PART NUMBER	DESCRIPTION
1	1	0300261	LEVER
2	1	0300290	COUPLING
3	1	0300381	DRUM
4	1	0300398	YOKE
5	1	0300399	SCREW
6	2	0300447	GASKET
7	1	0300448	KEY
8	1	0300449	SCREW
9	1	0300450	KEY
10	1	0300451	SHAFT
11	1	0300452	CLUTCH HOUSING
12	5	0300453	BUSHING
13	1	0300454	SCREW
14	1	0300455	SPRING
15	1	0300456	BALL
16	1	0300458	SPACER
17	2	0300459	PLUG
18	1	0300460	HOUSING
19	1	0300461	PLUG
20	1	0300462	REDUCER
21	1	0300463	DRAG BRAKE
22	1	0300464	SPRING
23	16	0300465	SCREW
24	1	0300466	CAP
25	2	0300467	BEARING
26	1	0300468	WORM
27	1	0300471	SEAL
28	1	0300472	HUB
29	1	0300473	GEAR
30	6	0300474	WASHER
31	6	0300475	SCREW
32	1	0300476	GASKET
33	1	0600477	COVER
34	4	0300569	SCREW
35	1	0300694	CAP ADAPTOR
36	1	0300695	SCREW
37	2	--	KEY
38	1	--	SHAFT
39	2	--	KEY
40	1	--	CLUTCH
41	1	0308608	TORSION SPRING
*	1	0308698	4 TON WORM WINCH ASSEMBLY

* When ordering specify winch serial number.

RAMSEY HD234 MANUAL-SHIFT WINCH GROUP W/SINGLE CLUTCH CONTROL ROD ASSEMBLY (UNDERWIND)

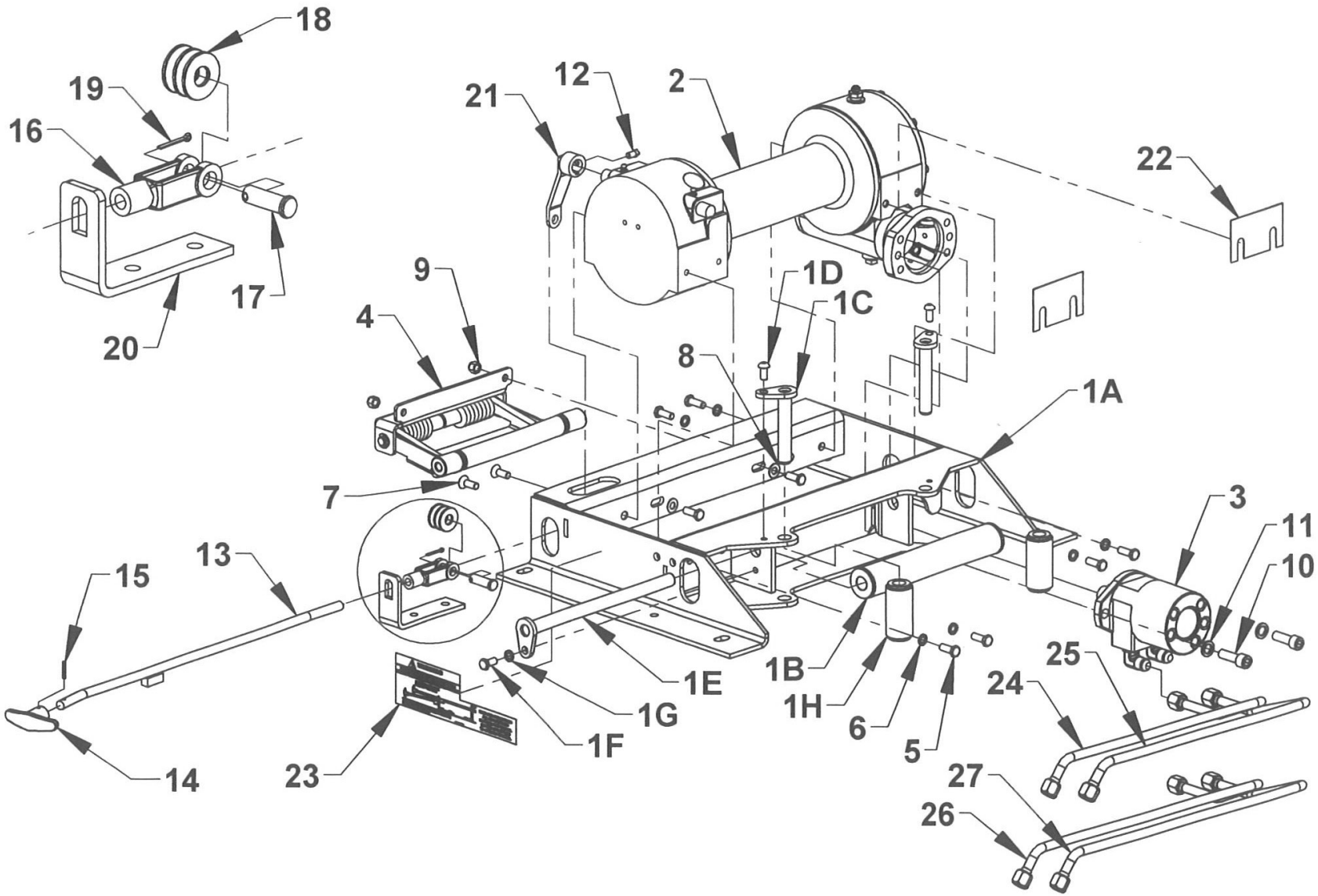

RAMSEY HD234 MANUAL-SHIFT WINCH GROUP W/SINGLE CLUTCH CONTROL ROD ASSEMBLY (UNDERWIND)

REF. NO.	NO. REQ'D	PART NUMBER	DESCRIPTION
1	1	0940425	RAMSEY HD234 WINCH MTG FRAME-GEN2
1A	1	0811139	RAMSEY HD234 WINCH MOUNTING FRAME
1B	1	0940428	ROLLER ASSEMBLY - 1-3/4 DIAMETER
1C	1	0811142	VERTICAL ROLLER KEEPER PIN - RAMSEY 8K
1D	2	0403004	BOLT- BHCS 3/8-16 UNC x 3/4 ZP
1E	2	0811145	ROLLER GUIDE KEEPER PIN - RAMSEY 8K WORM
1F	1	0400121	BOLT- HHCS 3/8-16 UNC x 3/4 ZP
1G	1	0400482	LOCK WASHER 3/8 ZP
1H	2	0709877G	RAMSEY HD234 VERTICAL ROLLER W/BUSHINGS
2	1	0308698	RAMSEY WINCH HD234 LEVER LOCK MANUAL SHIFT
3	1	0320147	WINCH MOTOR 5 CUBIC INCH
4	1	03020146	RAMSEY ROLLER TENSIONER-HD234
5	8	0400126	BOLT- HHCS 3/8-16 UNC x 1 ZP
6	6	0400482	LOCK WASHER 3/8 ZP
7	2	0403137	BOLT FHSCS 3/8-16 x 1 GRB
8	2	0400480	FLAT WASHER 3/8 ZP
9	2	0400392	NUT NYLOC 3/8-16 ZP
10	2	0400238	BOLT SHCS 1/2-13 x 1-1/2 GRB
11	2	0400491	LOCK WASHER 1/2 ZP
12	1	0400116	SET SCREW SQHD 5/16-18 x 1/2 ZP
13	1	0805170	RAMSEY WINCH CLUTCH CONTROL ROD
14	1	0301532	MILLER T-HANDLE
15	1	0400560	ROLL PIN 5/32 x 1
16	1	0301588	ADJUSTABLE YOKE
17	1	0400537	CLEVIS PIN 1/2 x 1-1/2 ZP
18	3	0400492	WASHER 1/2 FLAT
19	1	0400540	COTTER PIN 3/32 x 1
20	1	0710918	RAMSEY CLUTCH HANDLE MOUNTING ANGLE
21	1	0805151	BELL CRANK ARM
22	2	0701172-18	SHIM-RAMSEY HD234
23	1	0500815	WINCH SAFETY DECAL
24	1	0752167-R	S10-16 CNV RAMSEY HD234 FLUID TUBE-SHORT
25	1	0752168-R	S10-16 CNV RAMSEY HD234 FLUID TUBE-LONG
26	1	0751974-R	S12-16 LCG RAMSEY HD234 FLUID TUBE-SHORT
27	1	0751975-R	S12-16 LCG RAMSEY HD234 FLUID TUBE-LONG

RAMSEY HD234 MANUAL-SHIFT WINCH GROUP WITH DUAL CLUTCH CONTROL ROD ASSEMBLY

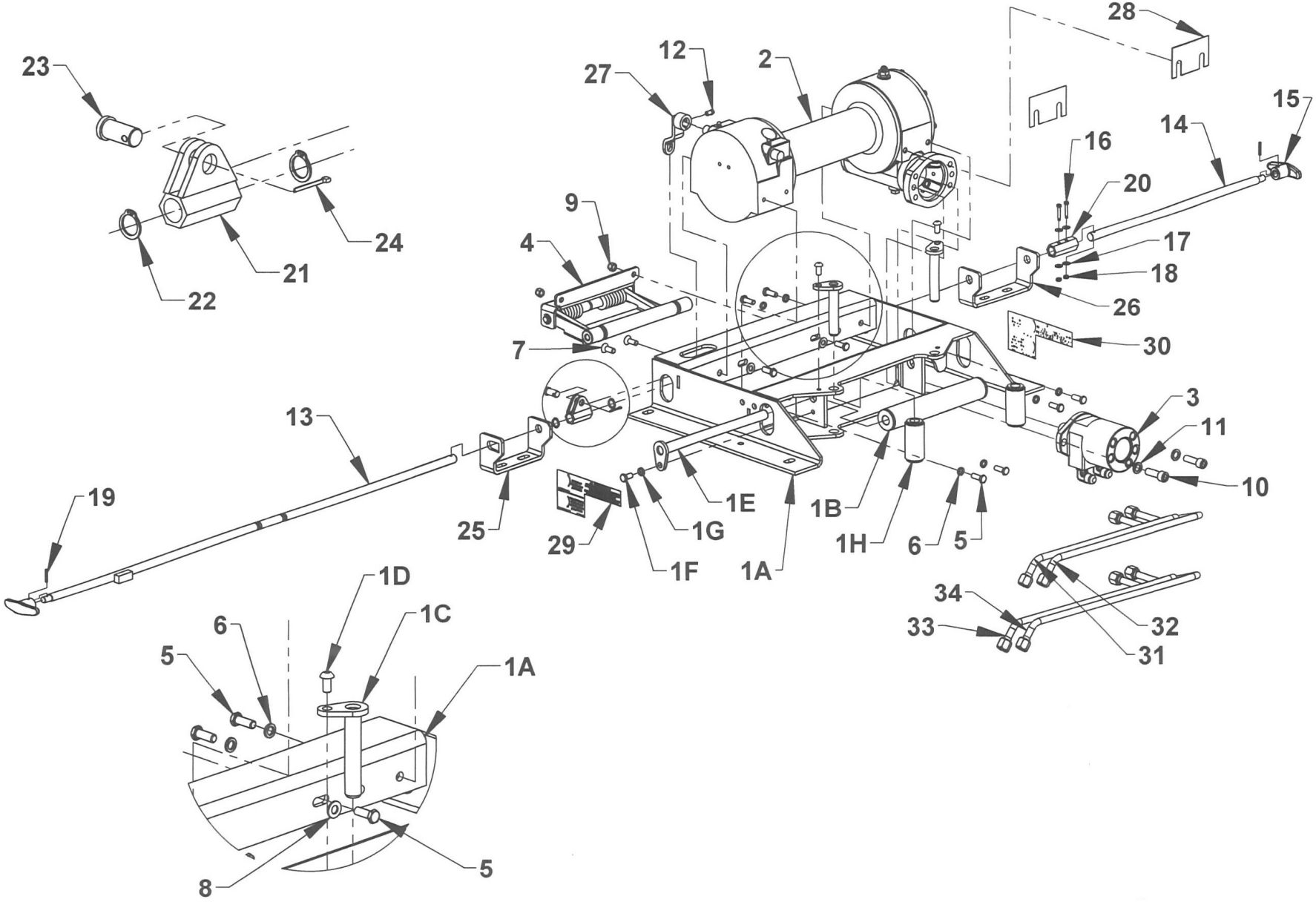

RAMSEY HD234 MANUAL-SHIFT WINCH GROUP WITH DUAL CLUTCH CONTROL ROD ASSEMBLY

REF. NO.	NO. REQ'D	PART NUMBER	DESCRIPTION
1	1	0940425	RAMSEY HD234 WINCH MTG FRAME-GEN2
1A	1	0811139	RAMSEY HD234 WINCH MOUNTING FRAME
1B	1	0940428	ROLLER ASSEMBLY - 1-3/4 DIAMETER
1C	2	0811142	VERTICAL ROLLER KEEPER PIN - RAMSEY 8K
1D	2	0403004	BOLT- BHCS 3/8-16 UNC x 3/4 ZP
1E	1	0811145	ROLLER GUIDE KEEPER PIN - RAMSEY 8K WORM
1F	1	0400121	BOLT- HHCS 3/8-16 UNC x 3/4 ZP
1G	1	0400482	LOCK WASHER 3/8 ZP
1H	2	0709877G	RAMSEY HD234 VERTICAL ROLLER W/BUSHINGS
2	1	0308698	RAMSEY WINCH HD234 LEVER LOCK MANUAL SHIFT
3	1	0320147	WINCH MOTOR 5 CUBIC INCH
4	1	03020146	RAMSEY ROLLER TENSIONER-HD234
5	8	0400126	BOLT- HHCS 3/8-16 UNC x 1 ZP
6	6	0400482	LOCK WASHER 3/8 ZP
7	2	0403137	BOLT FHSCS 3/8-16 x 1 GRB
8	2	0400480	FLAT WASHER 3/8 ZP
9	2	0400392	NUT NYLOC 3/8-16 ZP
10	2	0400238	BOLT SHCS 1/2-13 x 1-1/2 GRB
11	2	0400491	LOCK WASHER 1/2 ZP
12	1	0400116	SET SCREW SQHD 5/16-18 x 1/2 GRB
13	1	08002469	DUAL CLUTCH HANDLE ROD - 45"
14	1	07004181	DUAL CLUTCH HANDLE ROD - 19"
15	2	0301532	MILLER T-HANDLE
16	2	0403170	BOLT SSB #10 x 1 #8-32 SS
17	4	0403005	FLAT WASHER #10 SS
18	2	04003908	NUT #8-32 HEX NYLOC SS
19	2	0400560	ROLL PIN 5/32 x 1
20	1	07004182	DUAL CLUTCH CONTROL ROD COUPLING
21	1	08002489	DUAL CLUTCH HANDLE BUSHING
22	2	86062E	SNAP RING 5/8 EXTERNAL
23	1	04000341	CLEVIS PIN 1/2 x 1 ZP
24	1	0400540	COTTER PIN 3/32 x 1
25	1	07004164	DUAL CLUTCH HANDLE MTG ANGLE - LH
26	1	07004165	DUAL CLUTCH HANDLE MTG ANGLE - RH
27	1	08002468	DUAL HANDLE CLUTCH CRANK ARM
28	2	0701172-18	SHIM-RAMSEY HD234
29	1	05000522L	WINCH SAFETY DECAL - LH
30	1	0500522R	WINCH SAFETY DECAL - RH
31	1	0752167-R	S10-16 CNV RAMSEY HD234 FLUID TUBE-SHORT
32	1	0752168-R	S10-16 CNV RAMSEY HD234 FLUID TUBE-LONG
33	1	0751974-R	S12-16 LCG RAMSEY HD234 FLUID TUBE-SHORT
34	1	0751975-R	S12-16 LCG RAMSEY HD234 FLUID TUBE-LONG

RAMSEY HD234 AIR-SHIFT WINCH GROUP

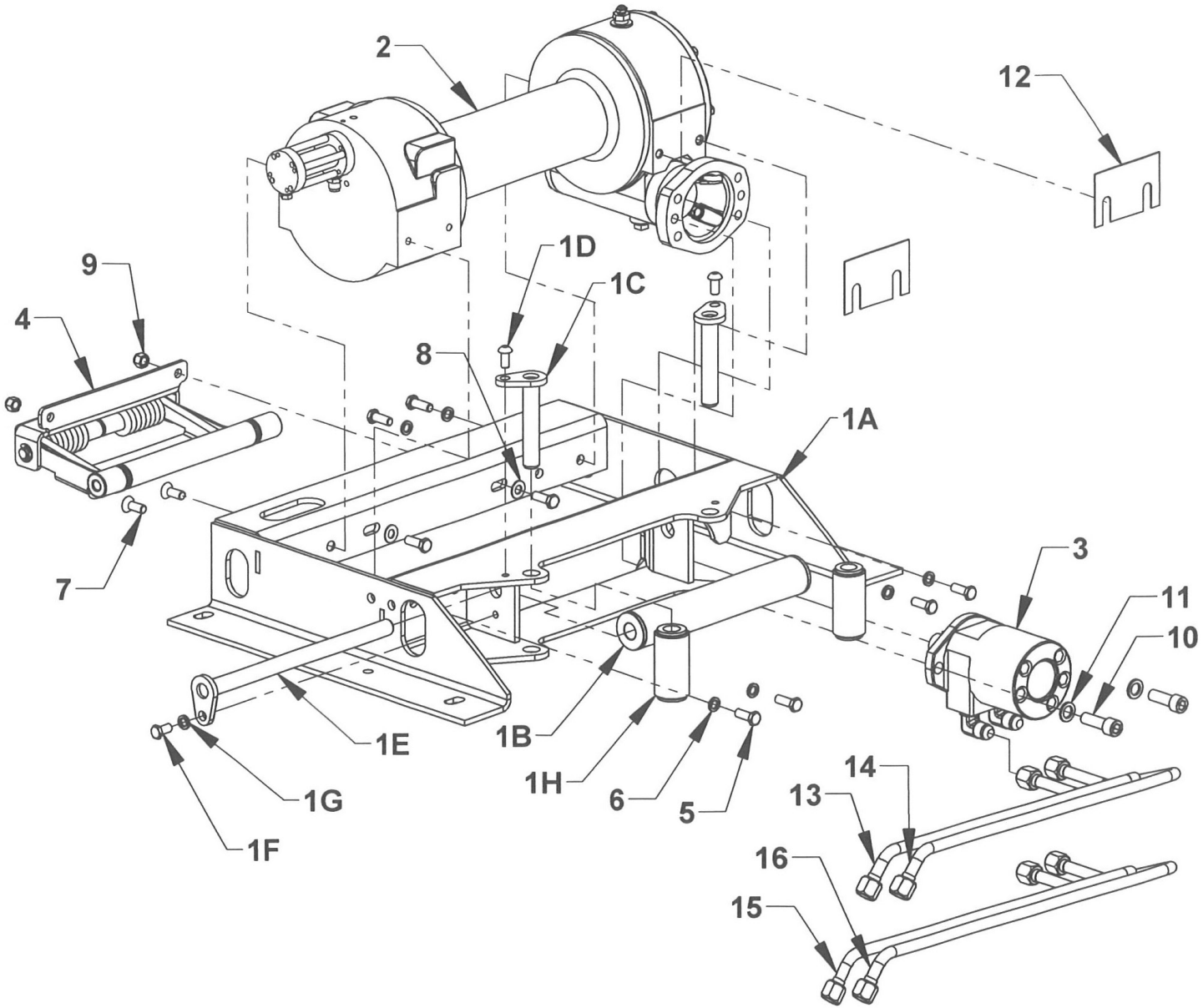

RAMSEY HD234 AIR-SHIFT WINCH GROUP

REF. NO.	NO. REQ'D	PART NUMBER	DESCRIPTION
1	1	0940425	RAMSEY HD234 WINCH MTG FRAME-GEN2
1A	1	0811139	RAMSEY HD234 WINCH MOUNTING FRAME
1B	1	0940428	ROLLER ASSEMBLY - 1-3/4 DIAMETER
1C	2	0811142	VERTICAL ROLLER KEEPER PIN - RAMSEY 8K
1D	2	0403004	BOLT- BHCS 3/8-16 UNC x 3/4 ZP
1E	1	0811145	ROLLER GUIDE KEEPER PIN - RAMSEY 8K WORM
1F	1	0400121	BOLT- HHCS 3/8-16 UNC x 3/4 ZP
1G	1	0400482	LOCK WASHER 3/8 ZP
1H	2	0709877G	RAMSEY HD234 VERTICAL ROLLER W/BUSHINGS
2	1	0308535	RAMSEY WINCH HD234 SHIFT
3	1	0320147	WINCH MOTOR 5 CUBIC INCH
4	1	03020146	RAMSEY ROLLER TENSIONER-HD234
5	8	0400126	BOLT- HHCS 3/8-16 UNC x 1 ZP
6	6	0400482	LOCK WASHER 3/8 ZP
7	2	0403137	BOLT FHSCS 3/8-16 x 1 GRB
8	2	0400480	FLAT WASHER 3/8 ZP
9	2	0400392	NUT NYLOCK 3/8-16 ZP
10	2	0400238	BOLT SHCS 1/2-13 x 1-1/2 GRB
11	2	0400491	LOCK WASHER 1/2 ZP
12	2	0701172-18	SHIM-RAMSEY HD234
13	1	0752167-R	S10-16 CNV RAMSEY HD234 FLUID TUBE-SHORT
14	1	0752168-R	S10-16 CNV RAMSEY HD234 FLUID TUBE-LONG
15	1	0751974-R	S12-16 LCG RAMSEY HD234 FLUID TUBE-SHORT
16	1	0751975-R	S12-16 LCG RAMSEY HD234 FLUID TUBE-LONG

RAMSEY WINCH - 0940421-0810AM
8K SIERRA PLANETARY MANUAL SHIFT

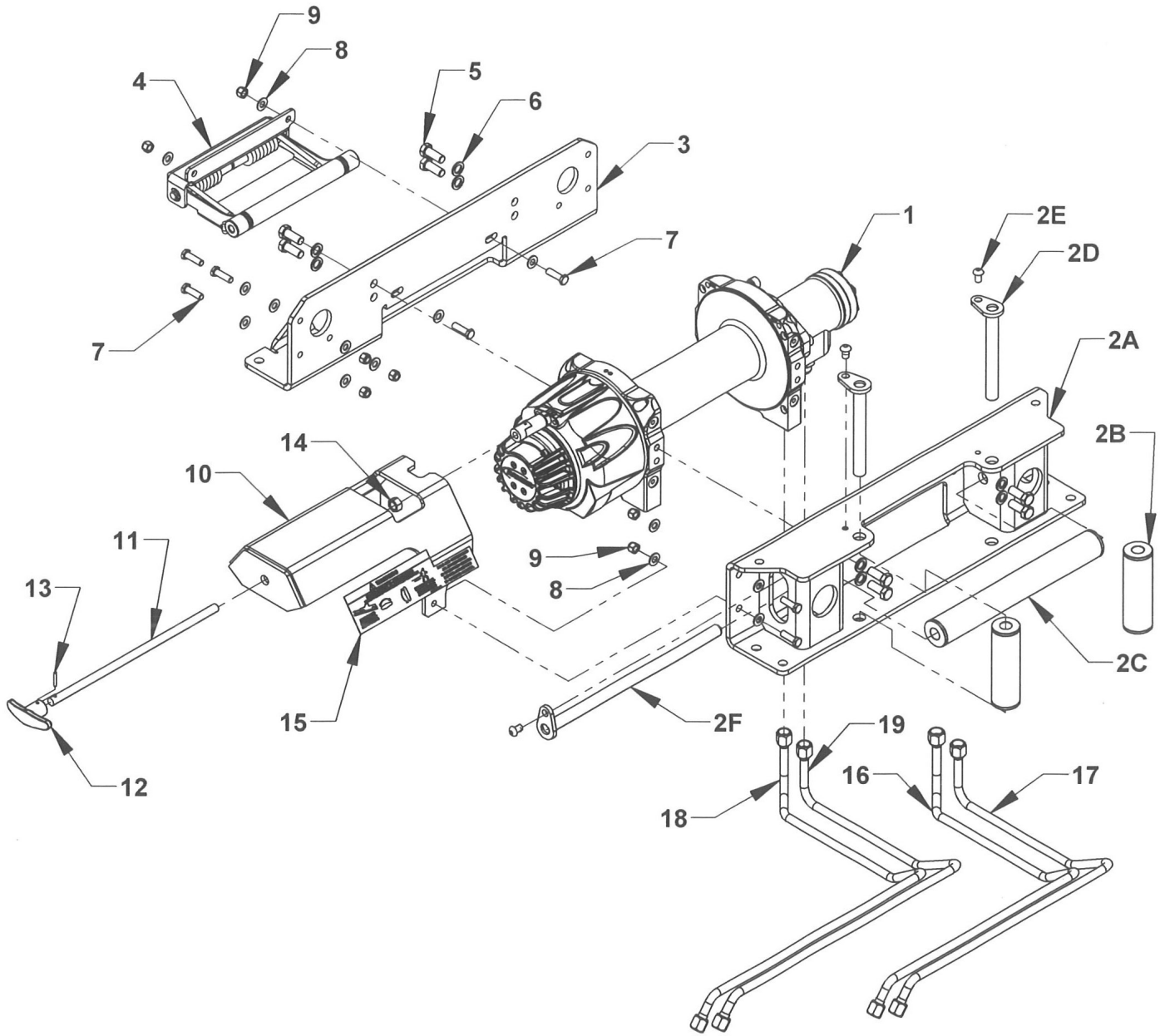

RAMSEY WINCH - 0940421-0810AM
8K SIERRA PLANETARY MANUAL SHIFT

REF. NO.	NO. REQ'D	PART NUMBER	DESCRIPTION
1	1	0320127-0810AM	RAMSEY SIERRA 8K PLANETARY WINCH
2	1	0940422	RAMSEY SIERRA ROLLER GUIDE ASSEMBLY
2A	1	0811127	RAMSEY SIERRA ROLLER GUIDE
2B	2	0809640	ROLLER ASSEMBLY - 1.75 DIAMETER
2C	1	A901520	ROLLER ASSEMBLY - 1.75 DIAMETER
2D	2	0809641	ROLLER GUIDE KEEPER PIN
2E	3	0403161	BOLT 3/8-16 UNC x 5/8 BUTTON HEAD
2F	1	A901525	ROLLER GUIDE KEEPER PIN
3	1	0811128	RAMSEY SIERRA FRONT MTG CHANNEL
4	1	03019524	SIERRA CABLE TENSIONER GEN 2
5	8	0400177	BOLT HHCS 1/2-13 UNC x 1-1/4
6	8	0400491	WASHER 1/2 LOCK
7	7	0400122	BOLT HHCS 3/8-16 UNC x 1-1/4
8	14	0400480	FLAT WASHER 3/8 SAE ZP
9	7	0400392	NYLON LOCK NUT 3/8-16 UNC
10	7	08011591	RAMSEY SIERRA T-HANDLE SUPPORT BRKT
11	1	0752684	RAMSEY SIERRA REMOTE CLUTCH ROD
12	1	0301532	MILLER T- HANDLE
13	1	0400560	ROLL PIN 1/8 x 7/8
14	1	0400407	NUT HEX 1/2
15	1	05002123	FREE SPOOL DECAL RAMSEY SIERRA
16	1	0752167-RS08	S10-16 CNV SIERRA FLUID TUBE-SHORT
17	1	0752168-RS08	S10-16 CNV SIERRA FLUID TUBE-LONG
18	1	0751974-RS08	S12-16 LCG SIERRA FLUID TUBE-SHORT
19	1	0751975-RS08	S12-16 LCG SIERRA FLUID TUBE-LONG

RAMSEY WINCH - 0940421-0810AM
8K SIERRA PLANETARY MANUAL SHIFT
DUAL HANDLE CLUTCH CONTROL ROD ASSEMBLY

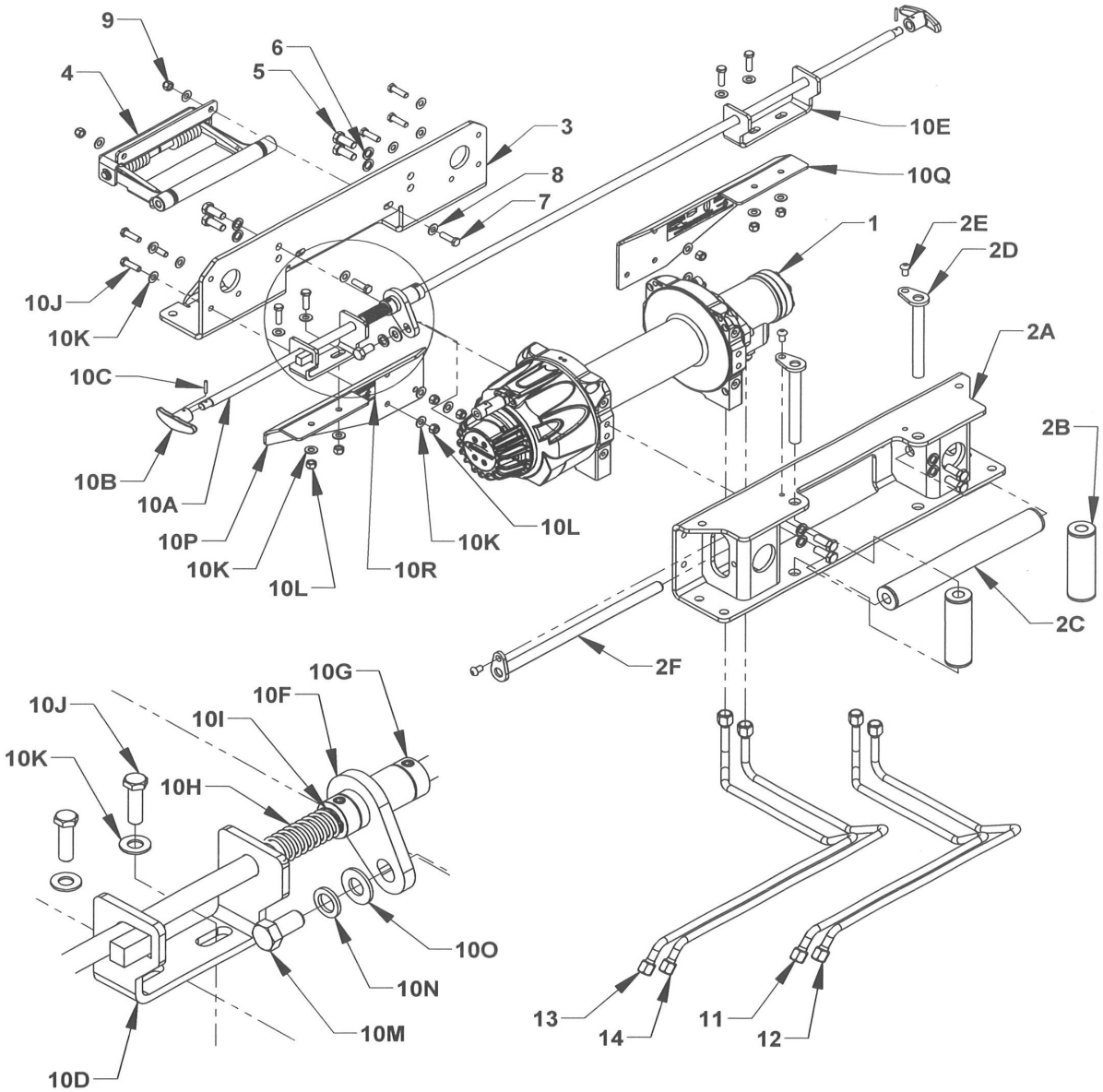

RAMSEY WINCH - 0940421-0810AM
8K SIERRA PLANETARY MANUAL SHIFT
DUAL HANDLE CLUTCH CONTROL ROD ASSEMBLY

REF. NO.	QTY	PART NUMBER	DESCRIPTION
1	1	0320127-0810AM	RAMSEY SIERRA 8K PLANETARY WINCH
2	1	0940422	RAMSEY SIERRA ROLLER GUIDE ASSEMBLY
2A	1	0811127	RAMSEY SIERRA ROLLER GUIDE
2B	2	0809640	ROLLER ASSEMBLY - 1.75 DIAMETER
2C	1	A901520	ROLLER ASSEMBLY - 1.75 DIAMETER
2D	2	0809641	ROLLER GUIDE KEEPER PIN
2E	3	0403161	BOLT 3/8-16 UNC x 5/8 BUTTON HEAD
2F	1	A901525	ROLLER GUIDE KEEPER PIN
3	1	0811128	RAMSEY SIERRA FRONT MTG CHANNEL
4	1	03019524	SIERRA CABLE TENSIONER GEN 2
5	8	0400177	BOLT HHCS 1/2-13 UNC x 1-1/4
6	8	0400491	WASHER 1/2 LOCK
7	2	0400122	BOLT HHCS 3/8-16 UNC x 1-1/4
8	4	0400480	FLAT WASHER 3/8 SAE ZP
9	2	0400392	NYLON LOCK NUT 3/8-16 UNC
10	1	09011048	RAMSEY SIERRA DUAL HANDLE ROD ASSEM
10A	1	08009068	SIERRA DUAL HANDLE CONTROL ROD - 64"
10B	2	0301532	MILLER T- HANDLE
10C	2	0400560	ROLL PIN 5/32 x 1
10D	1	07021447	DUAL CLUTCH HANDLE MTG CHANNEL - LH
10E	1	07004165	DUAL CLUTCH HANDLE MTG CHANNEL - RH
10F	1	08009269	DUAL HANDLE KEEPER BUSHING
10G	2	03012489	SET SCREW COLLAR 5/8 SHAFT, 5/16-18 x 1/4 SET SCREW
10H	1	03012928	SPRING COMPRESSION 3 x .875 OD x .091" WIRE DIA.
10I	2	86062E	SNAP RING 5/8 EXTERNAL
10J	10	0400122	BOLT HHCS 3/8-16 UNC x 1-1/4
10K	20	0400480	FLAT WASHER 3/8 SAE ZP
10L	10	0400392	NYLON LOCK NUT 3/8-16 UNC
10M	1	0400176	BOLT HHS 1/2-13 UNC x 1
10N	1	0400491	WASHER 1/2 LOCK
10O	1	0403040	FLAT WASHER 1/2 SAE ZP
10P	1	07014129L	RAMSEY SIERRA DUAL HANDLE MTG BRACKET - LH
10Q	1	07014129R	RAMSEY SIERRA DUAL HANDLE MTG BRACKET - RH
10R	2	05001603	FREE SPOOL DECAL RAMSEY SIERRA DUAL HANDLE
11	1	0752167-RS08	S10-16 CNV SIERRA FLUID TUBE-SHORT
12	1	0752168-RS08	S10-16 CNV SIERRA FLUID TUBE-LONG
13	1	0751974-RS08	S12-16 LCG SIERRA FLUID TUBE-SHORT
14	1	0751975-RS08	S12-16 LCG SIERRA FLUID TUBE-LONG

RAMSEY WINCH - 0940421-0810AA
8K SIERRA PLANETARY AIR SHIFT

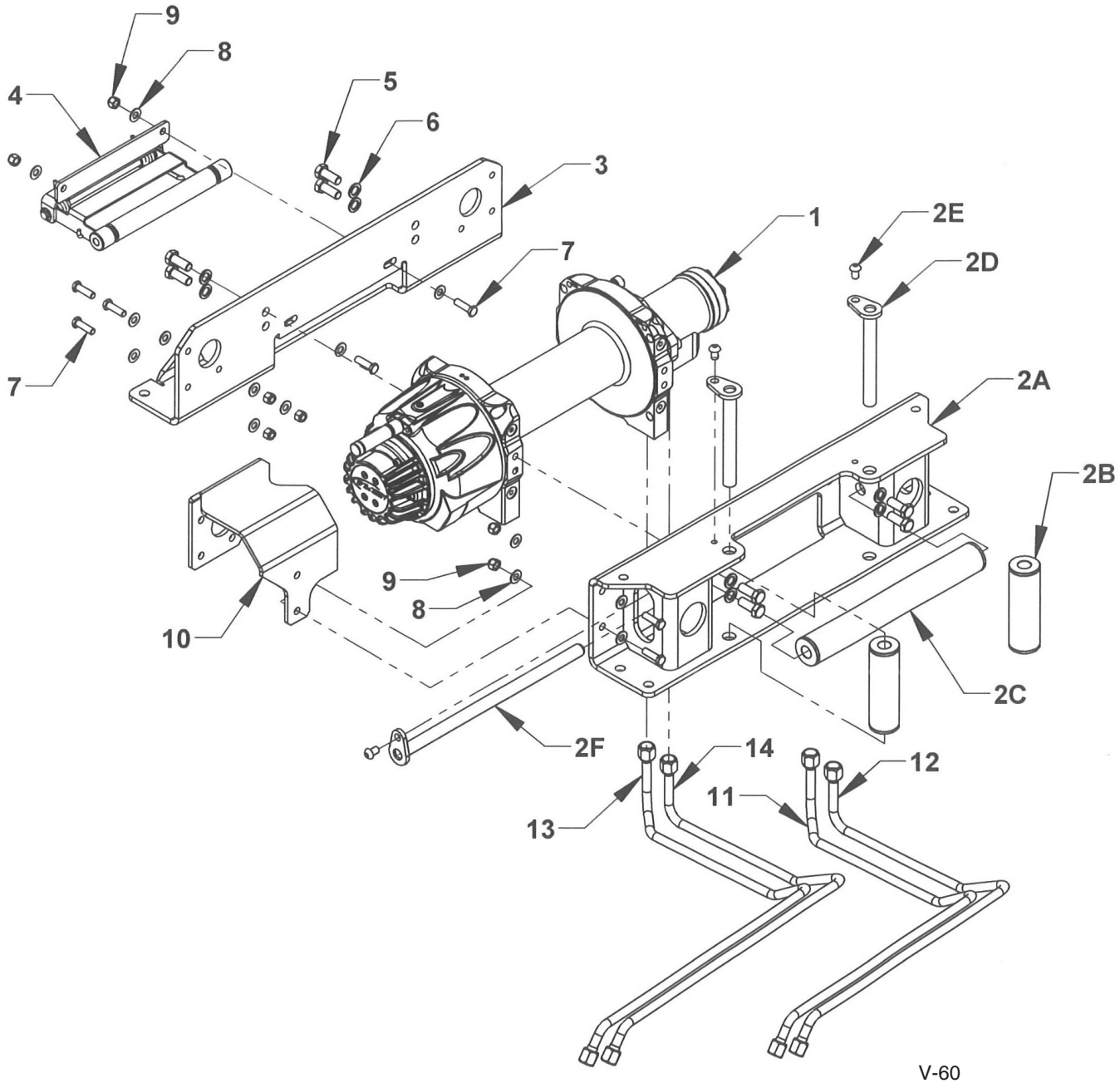

RAMSEY WINCH - 0940421-0810AA
8K SIERRA PLANETARY AIR SHIFT

REF. NO.	NO. REQ'D	PART NUMBER	DESCRIPTION
1	1	0320127-0810AA	RAMSEY SIERRA 8K PLANETARY WINCH
2	1	0940422	RAMSEY SIERRA ROLLER GUIDE ASSEMBLY
2A	1	0811127	RAMSEY SIERRA ROLLER GUIDE
2B	2	0809640	ROLLER ASSEMBLY - 1.75 DIAMETER
2C	1	A901520	ROLLER ASSEMBLY - 1.75 DIAMETER
2D	2	0809641	ROLLER GUIDE KEEPER PIN
2E	3	0403161	BOLT 3/8-16 UNC x 5/8 BUTTON HEAD
2F	1	A901525	ROLLER GUIDE KEEPER PIN
3	1	0811128	RAMSEY SIERRA FRONT MTG CHANNEL
4	1	03019524	SIERRA CABLE TENSIONER GEN 2
5	8	0400177	BOLT HHCS 1/2-13 UNC x 1-1/4
6	8	0400491	WASHER 1/2 LOCK
7	7	0400122	BOLT HHCS 3/8-16 UNC x 1-1/4
8	14	0400480	FLAT WASHER 3/8 SAE ZP
9	7	0400392	NYLON LOCK NUT 3/8-16 UNC
10	1	07005433	RAMSEY SIERRA AIR CYLINDER GUARD
11	1	0752167-RS08	S10-16 CNV SIERRA FLUID TUBE-SHORT
12	1	0752168-RS08	S10-16 CNV SIERRA FLUID TUBE-LONG
13	1	0751974-RS08	S12-16 LCG SIERRA FLUID TUBE-SHORT
14	1	0751975-RS08	S12-16 LCG SIERRA FLUID TUBE-LONG

RAMSEY WINCH - 09023899-0810AM
8K OMEGA PLANETARY MANUAL SHIFT

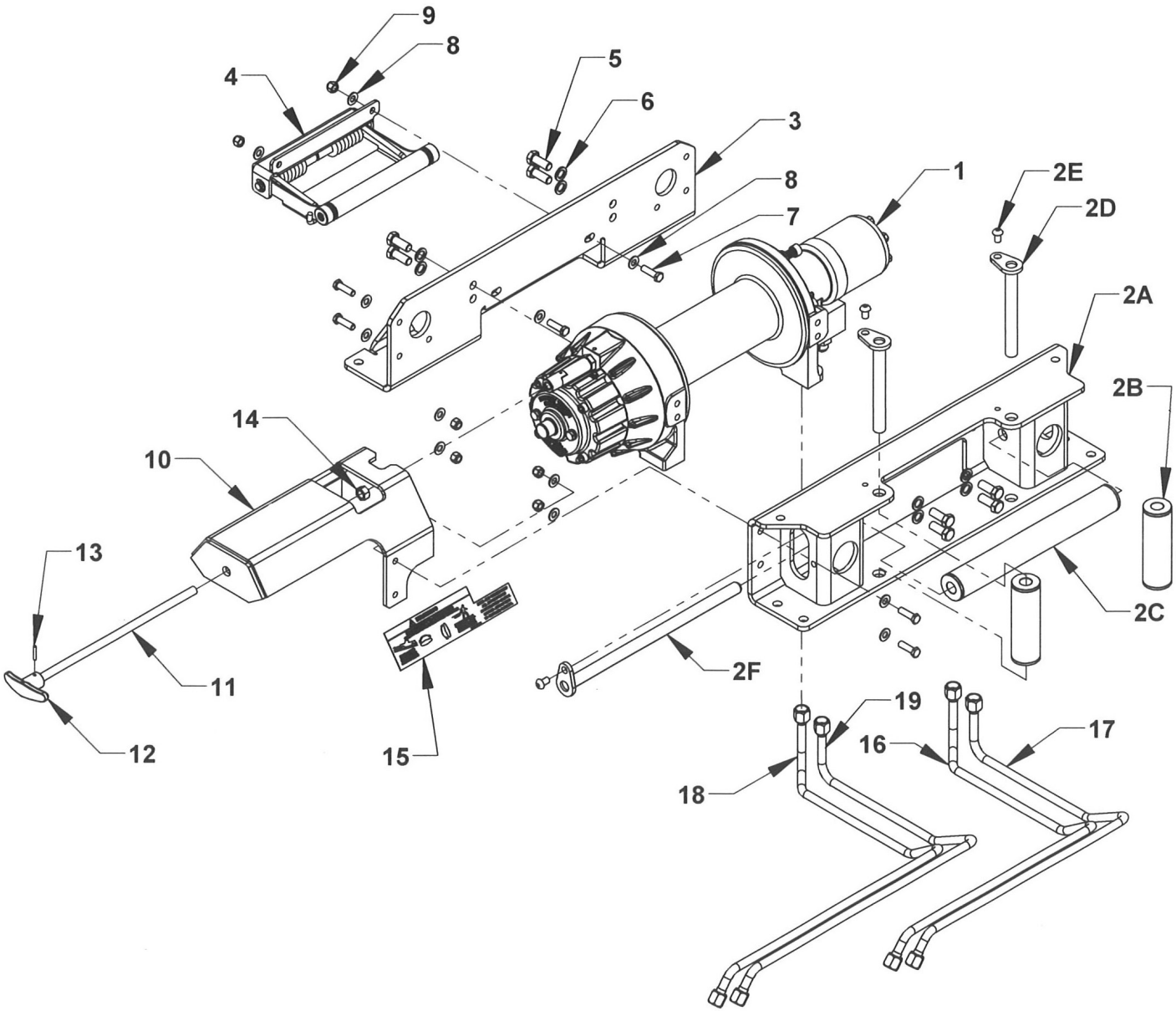

RAMSEY WINCH - 09023899-0810AM
8K OMEGA PLANETARY MANUAL SHIFT

REF. NO.	NO. REQ'D	PART NUMBER	DESCRIPTION
1	1	03026291-0810AM	RAMSEY OMEGA 8K PLANETARY WINCH
2	1	0940422	RAMSEY OMEGA ROLLER GUIDE ASSEMBLY
2A	1	0811127	RAMSEY OMEGA ROLLER GUIDE
2B	2	0809640	ROLLER ASSEMBLY - 1.75 DIAMETER
2C	1	A901520	ROLLER ASSEMBLY - 1.75 DIAMETER
2D	2	0809641	ROLLER GUIDE KEEPER PIN
2E	3	0403161	BOLT 3/8-16 UNC x 5/8 BUTTON HEAD
2F	1	A901525	ROLLER GUIDE KEEPER PIN
3	1	0811128	RAMSEY OMEGA FRONT MTG CHANNEL
4	1	03025735	OMEGA CABLE TENSIONER GEN 2
5	8	0400177	BOLT HHCS 1/2-13 UNC x 1-1/4
6	8	0400491	WASHER 1/2 LOCK
7	7	0400122	BOLT HHCS 3/8-16 UNC x 1-1/4
8	14	0400480	FLAT WASHER 3/8 SAE ZP
9	7	0400392	NYLON LOCK NUT 3/8-16 UNC
10	1	08011591	RAMSEY OMEGA T-HANDLE SUPPORT BRKT
11	1	0752684	RAMSEY OMEGA REMOTE CLUTCH ROD
12	1	0301532	MILLER T- HANDLE
13	1	0400560	ROLL PIN 1/8 x 7/8
14	1	0400407	NUT HEX 1/2
15	1	05002123	FREE SPOOL DECAL RAMSEY OMEGA
16	1	0752167-RS12	S10-16 CNV OMEGA FLUID TUBE-SHORT
17	1	0752168-RS12	S10-16 CNV OMEGA FLUID TUBE-LONG
18	1	0751974-RS12	S12-16 LCG OMEGA FLUID TUBE-SHORT
19	1	0751975-RS12	S12-16 LCG OMEGA FLUID TUBE-LONG

RAMSEY WINCH - 09023899-0810AM
8K OMEGA PLANETARY MANUAL SHIFT
DUAL HANDLE CLUTCH CONTROL ROD ASSEMBLY

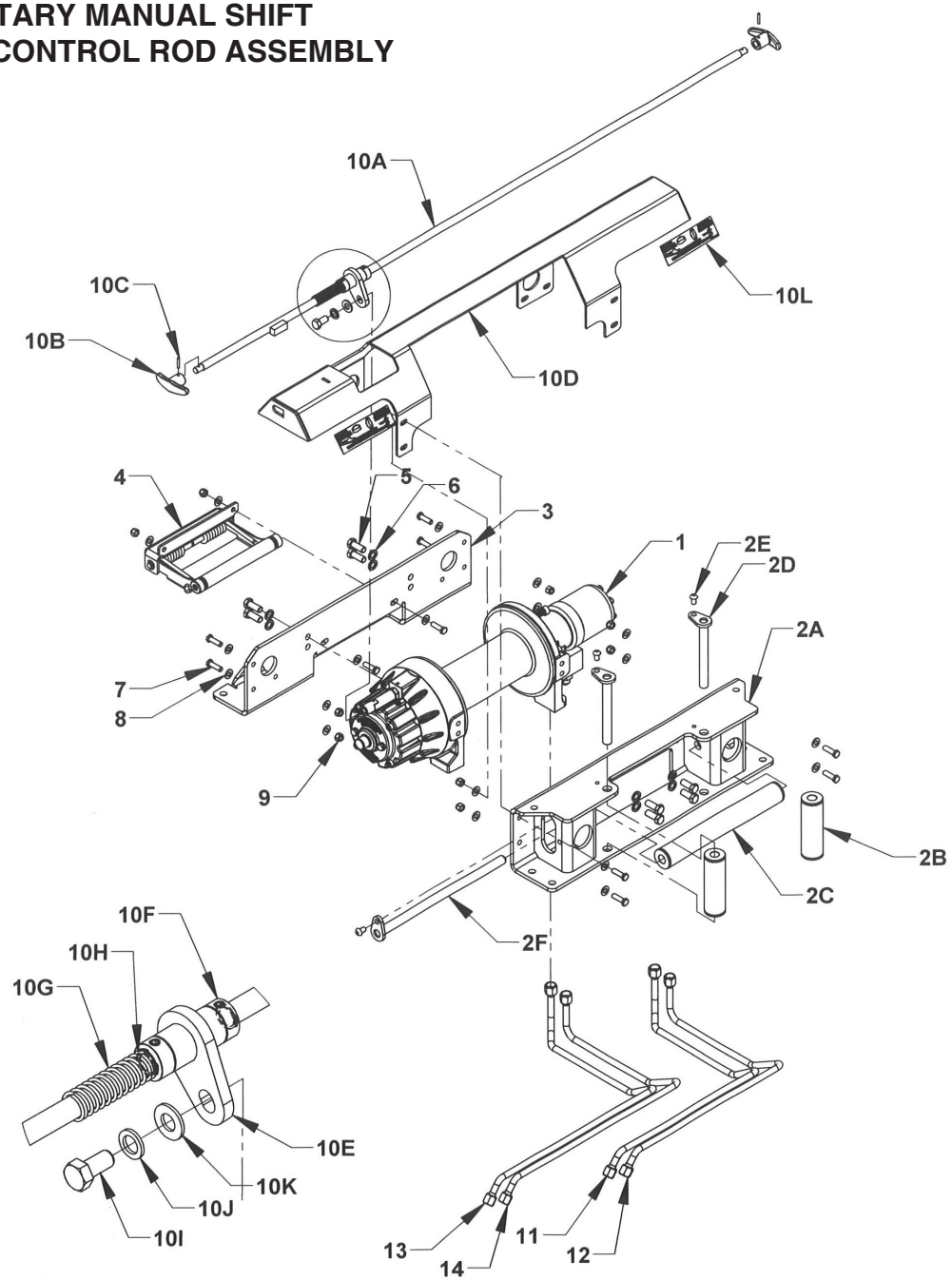

RAMSEY WINCH - 09023899-0810AM
8K OMEGA PLANETARY MANUAL SHIFT
DUAL HANDLE CLUTCH CONTROL ROD ASSEMBLY

REF. NO.	QTY	PART NUMBER	DESCRIPTION
1	1	0320127-0810AM	RAMSEY OMEGA 8K PLANETARY WINCH
2	1	0940422	RAMSEY ROLLER GUIDE ASSEMBLY
2A	1	0811127	RAMSEY ROLLER GUIDE
2B	2	0809640	ROLLER ASSEMBLY - 1.75 DIAMETER
2C	1	A901520	ROLLER ASSEMBLY - 1.75 DIAMETER
2D	2	0809641	ROLLER GUIDE KEEPER PIN
2E	3	0403161	BOLT 3/8-16 UNC x 5/8 BUTTON HEAD
2F	1	A901525	ROLLER GUIDE KEEPER PIN
3	1	0811128	RAMSEY FRONT MTG CHANNEL
4	1	03025735	OMEGA CABLE TENSIONER
5	8	0400177	BOLT HHCS 1/2-13 UNC x 1-1/4
6	8	0400491	WASHER 1/2 LOCK
7	10	0400122	BOLT HHCS 3/8-16 UNC x 1-1/4
8	20	0400480	FLAT WASHER 3/8 SAE ZP
9	10	0400392	NYLON LOCK NUT 3/8-16 UNC
10	1	09022538	OMEGA DUAL HANDLE FREE SPOOL ASSEMBLY
10A	1	08009068	OMEGA DUAL HANDLE CONTROL ROD - 64"
10B	2	0301532	MILLER T- HANDLE
10C	2	0400560	ROLL PIN 5/32 x 1
10D	1	08019903	OMEGA T-HANDLE SUPPORT BRACKET
10E	1	08019921	DUAL HANDLE KEEPER BUSHING
10F	2	03012489	SET SCREW COLLAR 5/8 SHAFT, 5/16-18 x 1/4 SET SCREW
10G	1	03012928	SPRING COMPRESSION 3 x .875 OD x .091" WIRE DIA.
10H	2	86062E	SNAP RING 5/8 EXTERNAL
10I	1	0400176	BOLT HHS 1/2-13 UNC x 1
10J	2	0400491	WASHER 1/2 LOCK
10K	1	0403040	FLAT WASHER 1/2 SAE ZP
10L	2	05001603	FREE SPOOL DECAL RAMSEY DUAL HANDLE
11	1	0752167-RS12	S10-16 CNV OMEGA FLUID TUBE-SHORT
12	1	0752168-RS12	S10-16 CNV OMEGA FLUID TUBE-LONG
13	1	0751974-RS12	S12-16 LCG OMEGA FLUID TUBE-SHORT
14	1	0751975-RS12	S12-16 LCG OMEGA FLUID TUBE-LONG

RAMSEY WINCH - 09023899-0810AA
8K OMEGA PLANETARY AIR SHIFT

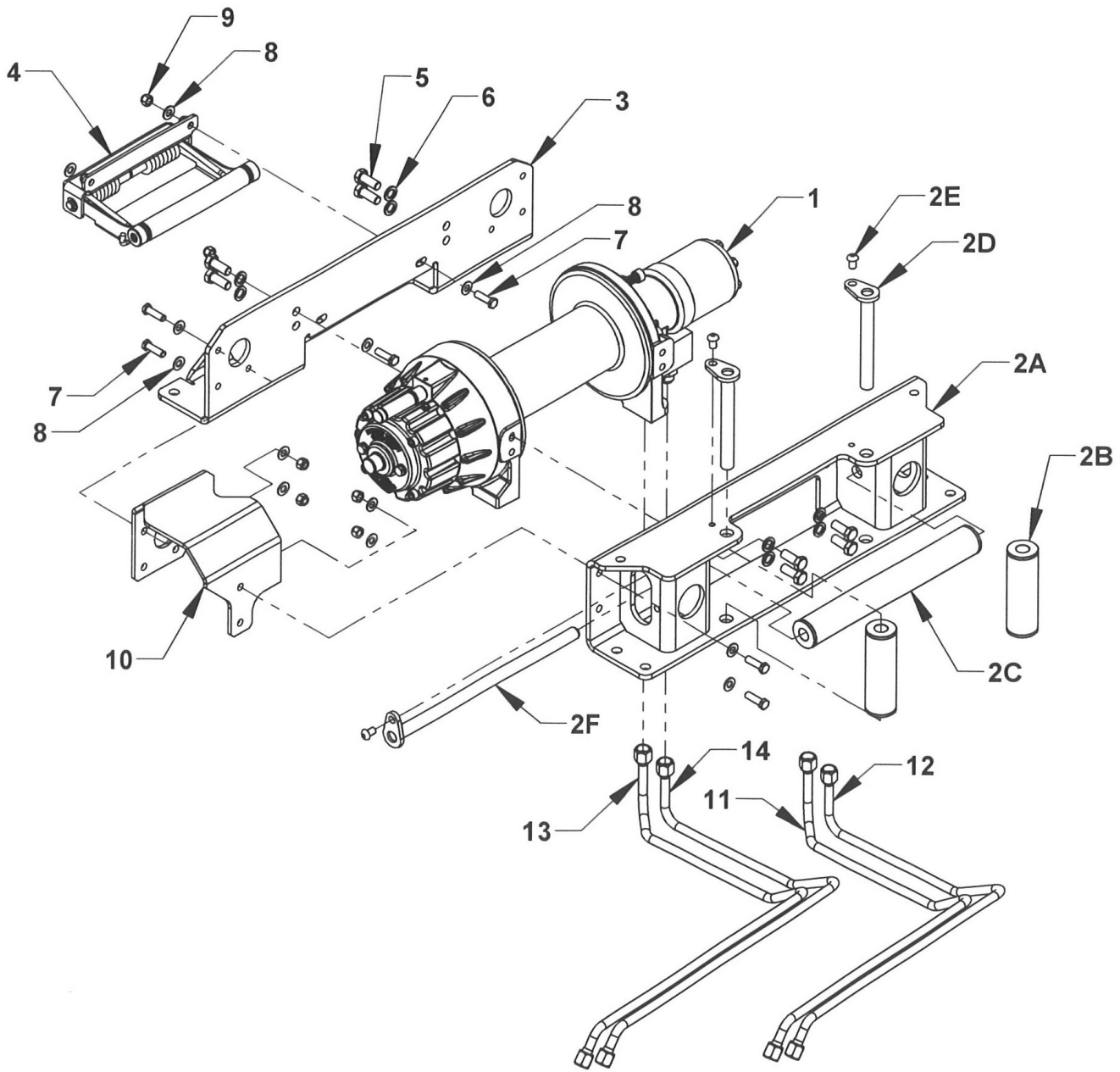

RAMSEY WINCH - 09023899-0810AA
8K OMEGA PLANETARY AIR SHIFT

REF. NO.	NO. REQ'D	PART NUMBER	DESCRIPTION
1	1	03026291-0810AA	RAMSEY OMEGA 8K PLANETARY WINCH
2	1	0940422	RAMSEY ROLLER GUIDE ASSEMBLY
2A	1	0811127	RAMSEY ROLLER GUIDE
2B	2	0809640	ROLLER ASSEMBLY - 1.75 DIAMETER
2C	1	A901520	ROLLER ASSEMBLY - 1.75 DIAMETER
2D	2	0809641	ROLLER GUIDE KEEPER PIN
2E	3	0403161	BOLT 3/8-16 UNC x 5/8 BUTTON HEAD
2F	1	A901525	ROLLER GUIDE KEEPER PIN
3	1	0811128	RAMSEY FRONT MTG CHANNEL
4	1	03025735	OMEGA CABLE TENSIONER GEN 2
5	8	0400177	BOLT HHCS 1/2-13 UNC x 1-1/4
6	8	0400491	WASHER 1/2 LOCK
7	7	0400122	BOLT HHCS 3/8-16 UNC x 1-1/4
8	14	0400480	FLAT WASHER 3/8 SAE ZP
9	7	0400392	NYLON LOCK NUT 3/8-16 UNC
10	1	07005433	RAMSEY AIR CYLINDER GUARD
11	1	0752167-RS12	S10-16 CNV OMEGA FLUID TUBE-SHORT
12	1	0752168-RS12	S10-16 CNV OMEGA FLUID TUBE-LONG
13	1	0751974-RS12	S12-16 LCG OMEGA FLUID TUBE-SHORT
14	1	0751975-RS12	S12-16 LCG OMEGA FLUID TUBE-LONG

DP WINCH - 09013369-0810AM
8K DP PLANETARY MANUAL SHIFT

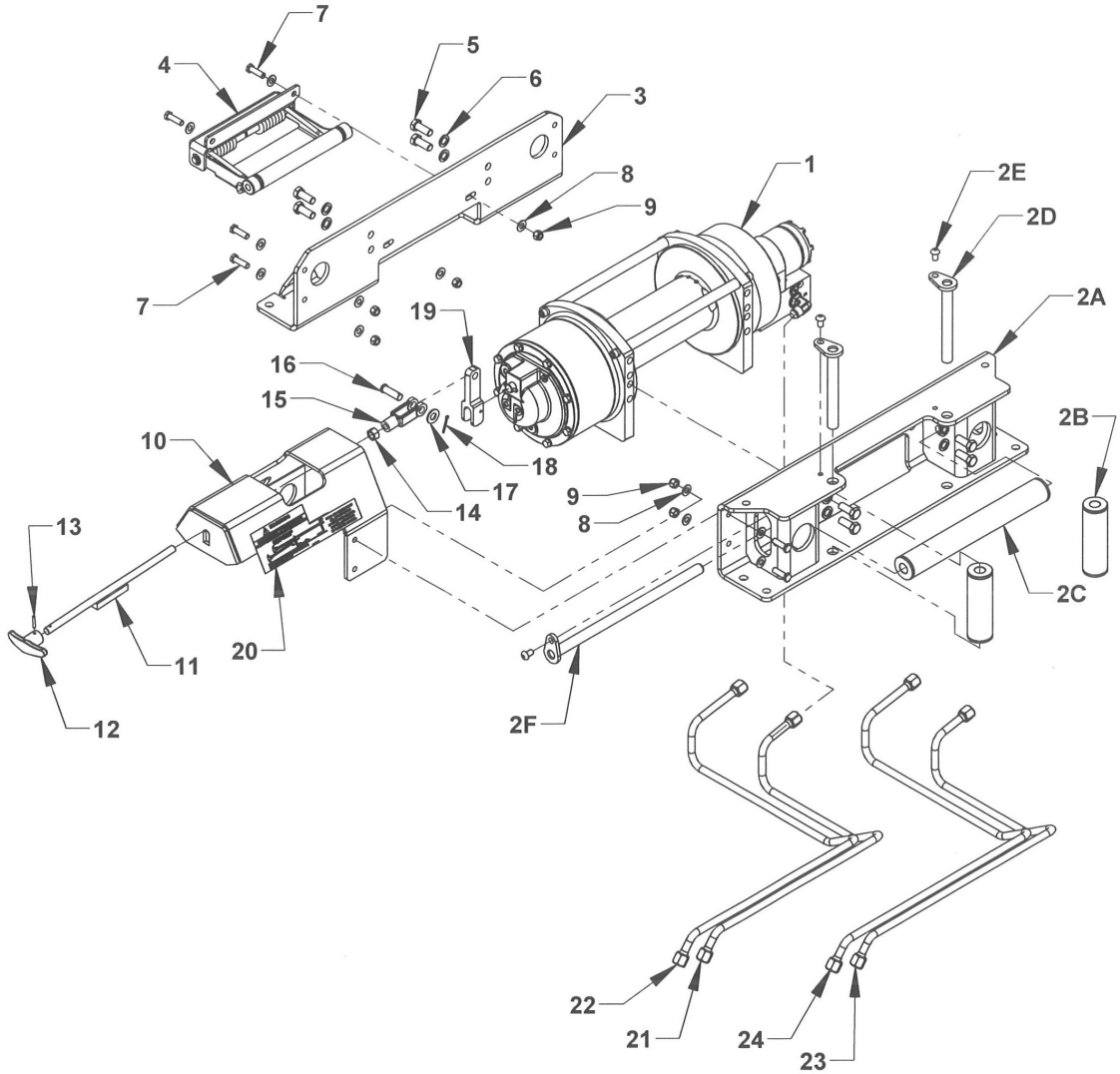

DP WINCH - 09013369-0810AM
8K DP PLANETARY MANUAL SHIFT

REF. NO.	QTY	PART NUMBER	DESCRIPTION
1	1	03015100-0810AM	DP 8K PLANETARY WINCH MANUAL SHIFT
		03015100-1210AM	DP 12K PLANETARY WINCH MANUAL SHIFT
		03015100-1510AM	DP 15K PLANETARY WINCH MANUAL SHIFT
2	1	09011914	DP 8K-15K ROLLER GUIDE FRAME ASSEMBLY
2A	1	08010128	DP 8K-15K ROLLER GUIDE FRAME
2B	2	0809640	ROLLER ASSEMBLY 1.75 DIAMETER x 5.625
2C	1	A901520	ROLLER ASSEMBLY 1.75 DIAMETER x 13.500
2D	2	0809641	ROLLER GUIDE KEEPER PIN 6.348
2E	3	0403161	BOLT 3/8-16 UNC x 5/8 BUTTON HEAD
2F	1	A901525	ROLLER GUIDE KEEPER PIN 14.535
3	1	08010129	DP FRONT MOUNTING FRAME
4	1	03015381	DP WINCH TENSIONER
5	8	0400177	BOLT HHCS 1/2-13 UNC x 1-1/4
6	8	0400491	LOCK WASHER 1/2
7	6	0400122	BOLT HHCS 3/8-16 UNC 1-1/4
8	12	0400480	FLAT WASHER 3/8
9	6	1400392	NYLON LOCK NUT 3/8-16 UNC
10	1	08011569	DP T-HANDLE SUPPORT BRACKET
11	1	08011568	DP T-HANDLE CLUTCH ROD
12	1	0301532	MILLER T-HANDLE
13	1	0400560	ROLL PIN .532 x 1
14	1	0400407	NUT HEX 1/2
15	1	0301588	CLUTCH CONTROL ADJUSTABLE YOKE
16	1	0400537	CLEVIS PIN 1/2 x 1-1/2
17	1	0403040	FLAT WASHER 1/2
18	1	0400540	COTTER PIN 3/32 x 1
19	1	03017221	DP WINCH LEVER
20	1	0500815	WINCH SAFETY DECAL
21	1	0752167-DP08	S10-16 CNV DP FLUID TUBE-SHORT
22	1	0752168-DP08	S10-16 CNV DP FLUID TUBE-LONG
23	1	0751974-DP08	S12-16 LCG DP FLUID TUBE-SHORT
24	1	0751975-DP08	S12-16 LCG DP FLUID TUBE-LONG

NOTE: Items 21 through 24 are not included in 09013369-0810AM.

DP WINCH - 09013369-0810AA
8K DP PLANETARY AIR SHIFT

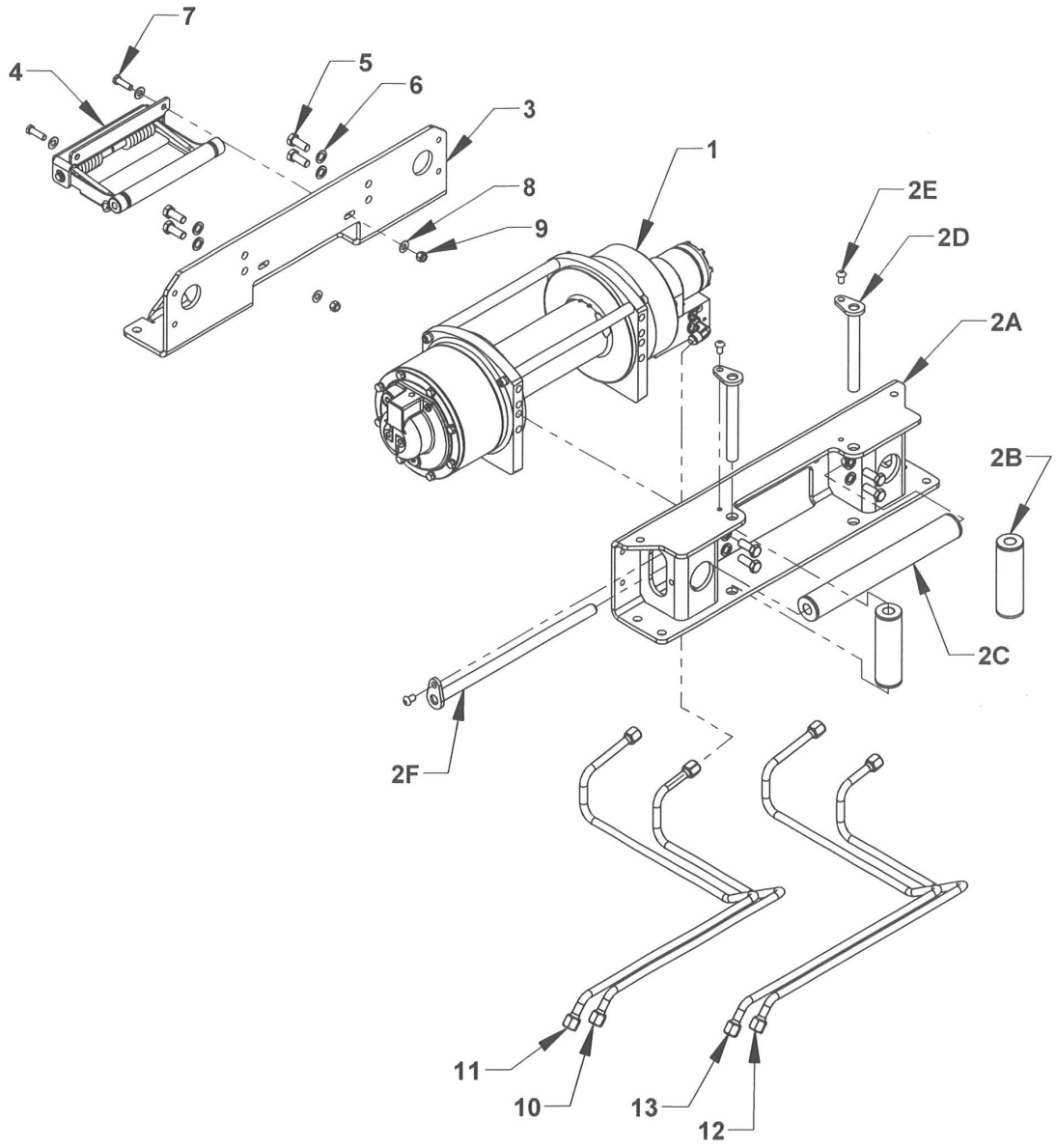

DP WINCH - 09013369-0810AA
8K DP PLANETARY AIR SHIFT

REF. NO.	QTY	PART NUMBER	DESCRIPTION
1	1	03015100-0810AA	DP 8K PLANETARY WINCH AIR SHIFT
		03015100-1210AA	DP 12K PLANETARY WINCH AIR SHIFT
		03015100-1510AA	DP 15K PLANETARY WINCH AIR SHIFT
2	1	09011914	DP 8K-15K ROLLER GUIDE FRAME ASSEMBLY
2A	1	08010128	DP 8K-15K ROLLER GUIDE FRAME
2B	2	0809640	ROLLER ASSEMBLY 1.75 DIAMETER x 5.625
2C	1	A901520	ROLLER ASSEMBLY 1.75 DIAMETER x 13.500
2D	2	0809641	ROLLER GUIDE KEEPER PIN 6.348
2E	3	0403161	BOLT 3/8-16 UNC x 5/8 BUTTON HEAD
2F	1	A901525	ROLLER GUIDE KEEPER PIN 14.535
3	1	08010129	DP FRONT MOUNTING FRAME
4	1	03015381	DP WINCH TENSIONER
5	8	0400177	BOLT HHCS 1/2-13 UNC x 1-1/4
6	8	0400491	LOCK WASHER 1/2
7	2	0400122	BOLT HHCS 3/8-16 UNC x 1-1/4
8	4	0400480	FLAT WASHER 3/8
9	2	1400392	NYLON LOCK NUT 3/8-16 UNC
10	1	0752167-DP08	S10-16 CNV DP FLUID TUBE-SHORT
11	1	0752168-DP08	S10-16 CNV DP FLUID TUBE-LONG
12	1	0751974-DP08	S12-16 LCG DP FLUID TUBE-SHORT
13	1	0751975-DP08	S12-16 LCG DP FLUID TUBE-LONG

NOTE: Items 10 through 13 are not included in 09013369-0810AM.

8K COMEUP WINCH - 0940283-0810AM

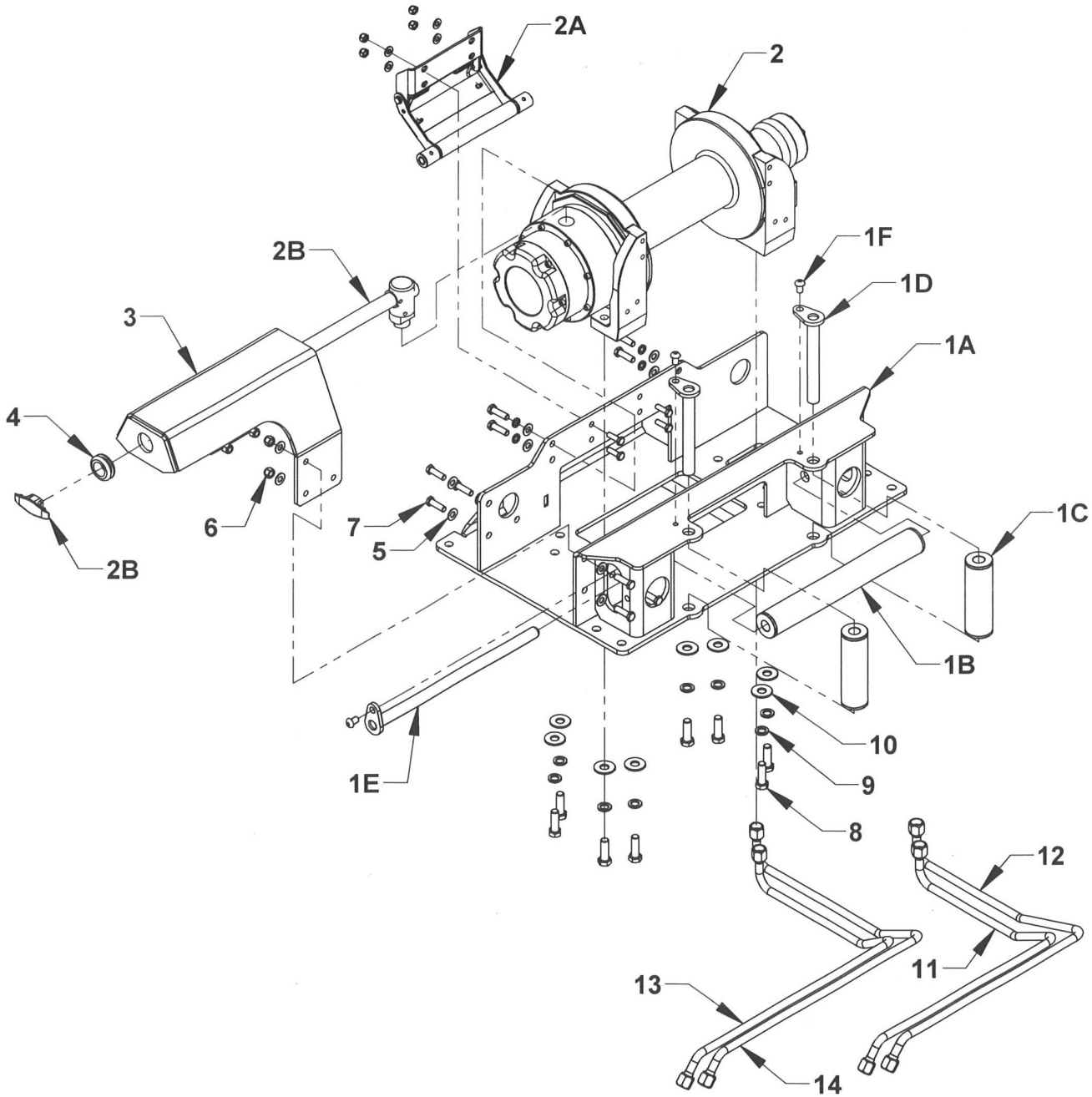

8K COMEUP WINCH - 0940283-0810AM

REF. NO.	NO. REQ'D	PART NUMBER	DESCRIPTION
1	1	0940281	COMEUP 8K-12K WINCH FRAME ASSEMBLY
1A	1	0809713	COMEUP FRAME WELDMENT
1B	1	A901520	ROLLER ASSEMBLY - 1.750 DIAMETER x 13.500
1C	2	0809640	ROLLER ASSEMBLY - 1.750 DIAMETER x 5.625
1D	2	0809641	ROLLER GUIDE KEEPER PIN - 6.348
1E	1	A901525	ROLLER GUIDE KEEPER PIN - 14.535
1F	3	0403161	BOLT, BHCS 3/8-16 UNC x 5/8
2	1	0308986-0810AM	COMEUP 8K WINCH-ROTATION MANUAL SHIFT
		0308986-1210AM	COMEUP 12K WINCH-ROTATION MANUAL SHIFT
		0308986-1510AM	COMEUP 15K WINCH-ROTATION MANUAL SHIFT
2A	1	0320128	COMEUP WINCH TENSIONER
2B	1	0320129	COMEUP T-HANDLE CLUTCH - 16
3	1	08011590	COMEUP T-HANDLE SUPPORT BRACKET
4	1	98718	GROMMET 1.00 ID x 0.25 GROOVE
5	12	0400480	FLAT WASHER 3/8
6	6	0400392	NUT NYLOK 3/8-16 UNC
7	6	0400148	BOLT HHCS 3/8-16 UNC x 1-1/2 GR5
8	8	0400181	BOLT HHCS 1/2-13 UNC x 1-1/2 GR5
9	8	0400491	LOCK WASHER 1/2
10	8	0400492	WASHER 1/2
11	1	0752167-C	S10-16 CNV COMEUP FLUID TUBE-SHORT
12	1	0752168-C	S10-16 CNV COMEUP FLUID TUBE-LONG
13	1	0751974-C	S12-16 LCG COMEUP FLUID TUBE-SHORT
14	1	0751975-C	S12-16 LCG COMEUP FLUID TUBE-LONG

8K COMEUP WINCH - 0940283-0810AA

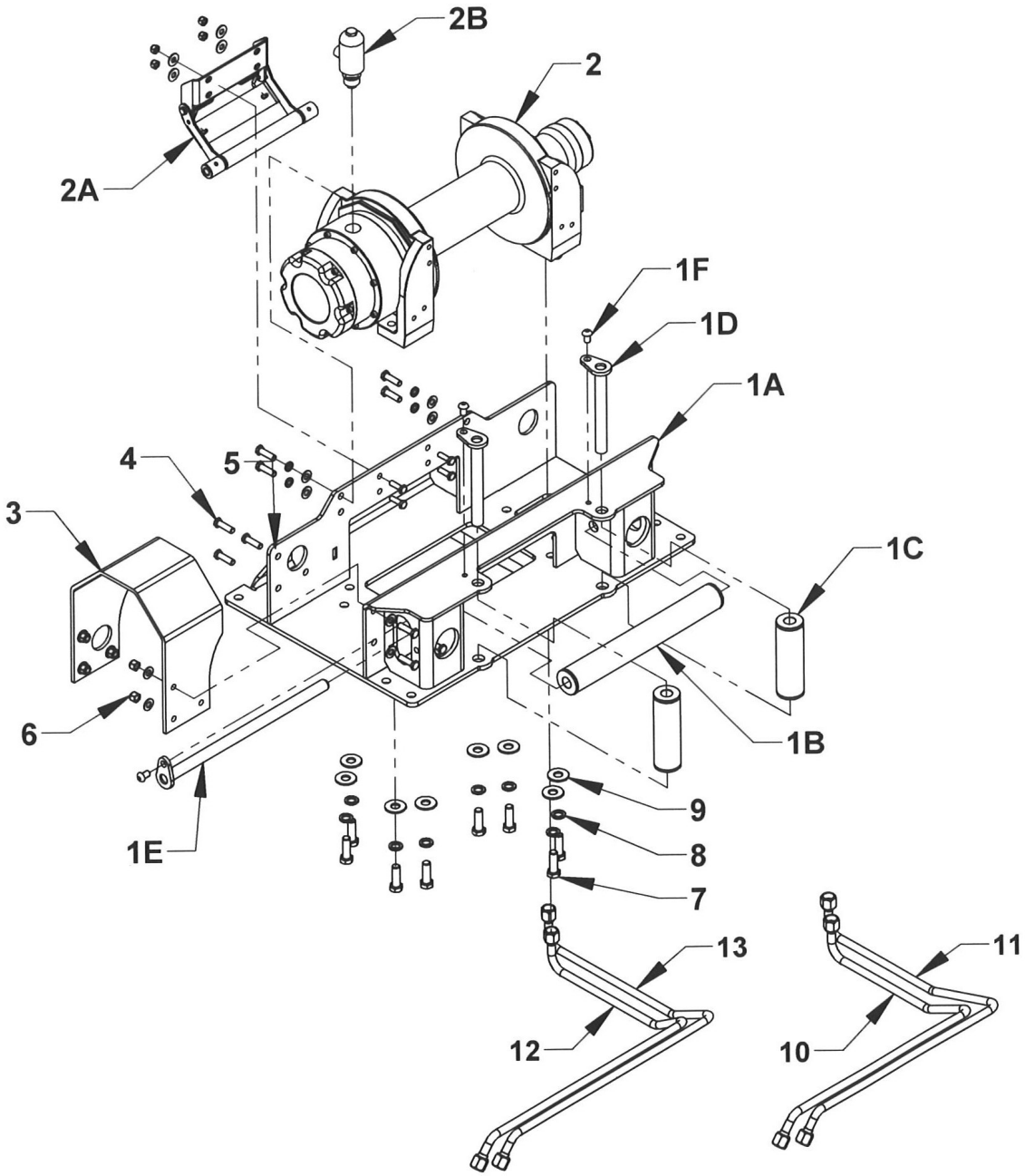

8K COMEUP WINCH - 0940283-0810AA

REF. NO.	NO. REQ'D	PART NUMBER	DESCRIPTION
1	1	0940281	COMEUP 8K-12K WINCH FRAME ASSEMBLY
1A	1	0809713	COMEUP FRAME WELDMENT
1B	1	A901520	ROLLER ASSEMBLY - 1.750 DIAMETER x 13.500
1C	2	0809640	ROLLER ASSEMBLY - 1.750 DIAMETER x 5.625
1D	2	0809641	ROLLER GUIDE KEEPER PIN - 6.348
1E	1	A901525	ROLLER GUIDE KEEPER PIN - 14.535
1F	3	0403161	BOLT, BHCS 3/8-16 UNC x 5/8
2	1	0308986-0810AA	COMEUP 8K WINCH-ROTATION AIR SHIFT
		0308986-1210AA	COMEUP 12K WINCH-ROTATION AIR SHIFT
		0308986-1510AA	COMEUP 15K WINCH-ROTATION AIR SHIFT
2A	1	0320128	COMEUP WINCH TENSIONER
2B	1	0308955	COMEUP FREE SPOOL AIR CYLINDER
3	1	0752482	COMEUP AIR CYLINDER GUARD
4	6	0400148	BOLT HHCS 3/8-16 UNC x 1-1/2 GR5
5	12	0400480	FLAT WASHER 3/8
6	6	040392	NUT NYLOK 3/8-16 UNC
7	8	0400181	BOLT HHCS 1/2-13 UNC x 1-1/2 GR5
8	8	0400491	LOCK WASHER 1/2
9	8	0400492	WASHER 1/2
10	1	0752167-C	S10-16 CNV COMEUP FLUID TUBE-SHORT
11	1	0752168-C	S10-16 CNV COMEUP FLUID TUBE-LONG
12	1	0751974-C	S12-16 LCG COMEUP FLUID TUBE-SHORT
13	1	0751975-C	S12-16 LCG COMEUP FLUID TUBE-LONG

WARN WINCH - MANUAL FREE SPOOL

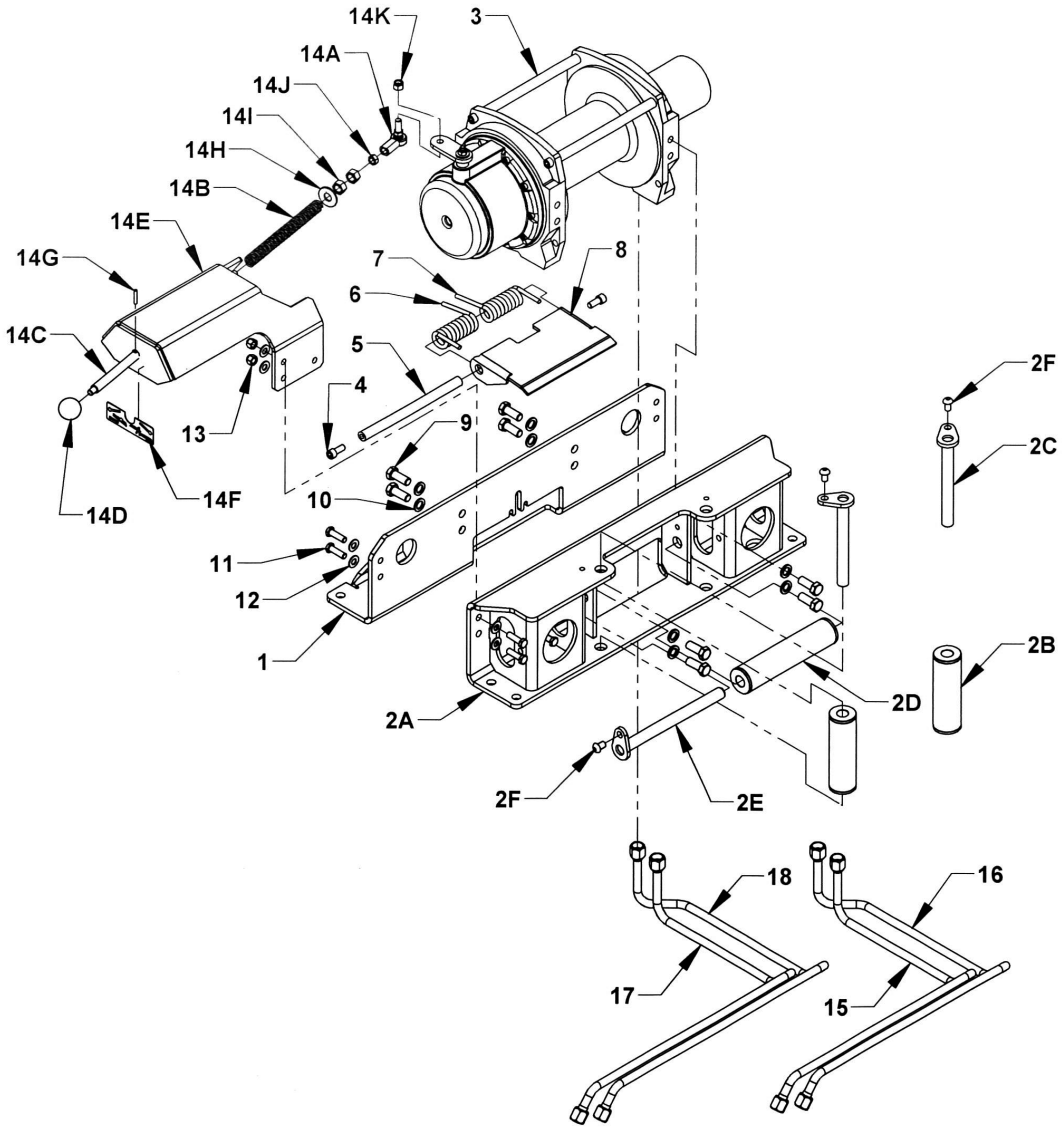

WARN WINCH - MANUAL FREE SPOOL

REF. NO.	NO. REQ'D	PART NUMBER	DESCRIPTION
1	1	0809644	MTG FRAME WELDMENT - FRONT
2	1	0940240	WARN MTG FRAME REAR ASSEMBLY
2A	1	0809639	MTG FRAME WLDMNT - ROLLER GUIDE REAR
2B	2	0809640	ROLLER GUIDE BUSHING 1.75 x 5.625
2C	2	0809641	ROLLER GUIDE KEEPER PIN
2D	1	A9R281	ROLLER GUIDE BUSHING 1.75 x 7.875
2E	1	A902095	ROLLER GUIDE KEEPER PIN
2F	3	0403161	BOLT, BHCS 3/8-16 UNC x 5/8
3	1	0308936-0908AM	WINCH 9K, 8 IN. DRUM MANUAL SHIFT
		0308936-1208AM	WINCH 12K, 8 IN. DRUM MANUAL SHIFT
		0308936-1508AM	WINCH 15K, 8 IN. DRUM MANUAL SHIFT
4	2	0403109	BOLT, SHCS 3/8-16 UNC x 7/8
5	1	0751337	TENSION PLATE PIVOT ROD
6	1	0308935R	TENSION SPRING
7	1	0308935L	TENSION SPRING
8	1	0751268	TENSION PLATE
9	8	0400177	BOLT HHCS 1/2-13 UNC x 1-1/4
10	8	0400491	LOCK WASHER 1/2
11	5	0400122	BOLT HHCS 3/8-16 UNC x 1-1/4
12	10	0400480	FLAT WASHER 3/8
13	5	0400392	NYLON LOCK NUT 3/8-16 UNC
14	1	09013709	CLUTCH CONTROL ASSEMBLY WARN WINCH
14A	1	718732	ROD END BEARING
14B	1	71875	WINCH SPRING
14C	1	71873	WINCH CLUTCH ROD
14D	1	718731	WINCH CLUTCH ROD KNOB
14E	1	08011592	WINCH-MANUAL FREE SPOOL BRACKET
14F	1	05002124	FREE SPOOL DECAL WARN WINCH
14G	1	0405559	SPLIT PIN 3/16 x 1
14H	1	0400492	FLAT WASHER 1/2
14I	2	0400407	HEX NUT 1/2-13 UNC
14J	1	0402122	HEX NUT 3/8-16 UNC
14K	1	0400392	NYLON LOCK NUT 3/8-16 UNC
15	1	0752167-W	S10-16 CNV WARN FLUID TUBE-SHORT
16	1	0752168-W	S10-16 CNV WARN FLUID TUBE-LONG
17	1	0751974-W	S12-16 LCG WARN FLUID TUBE-SHORT
18	1	0751975-W	S12-16 LCG WARN FLUID TUBE-LONG

WARN WINCH - AIR FREE SPOOL

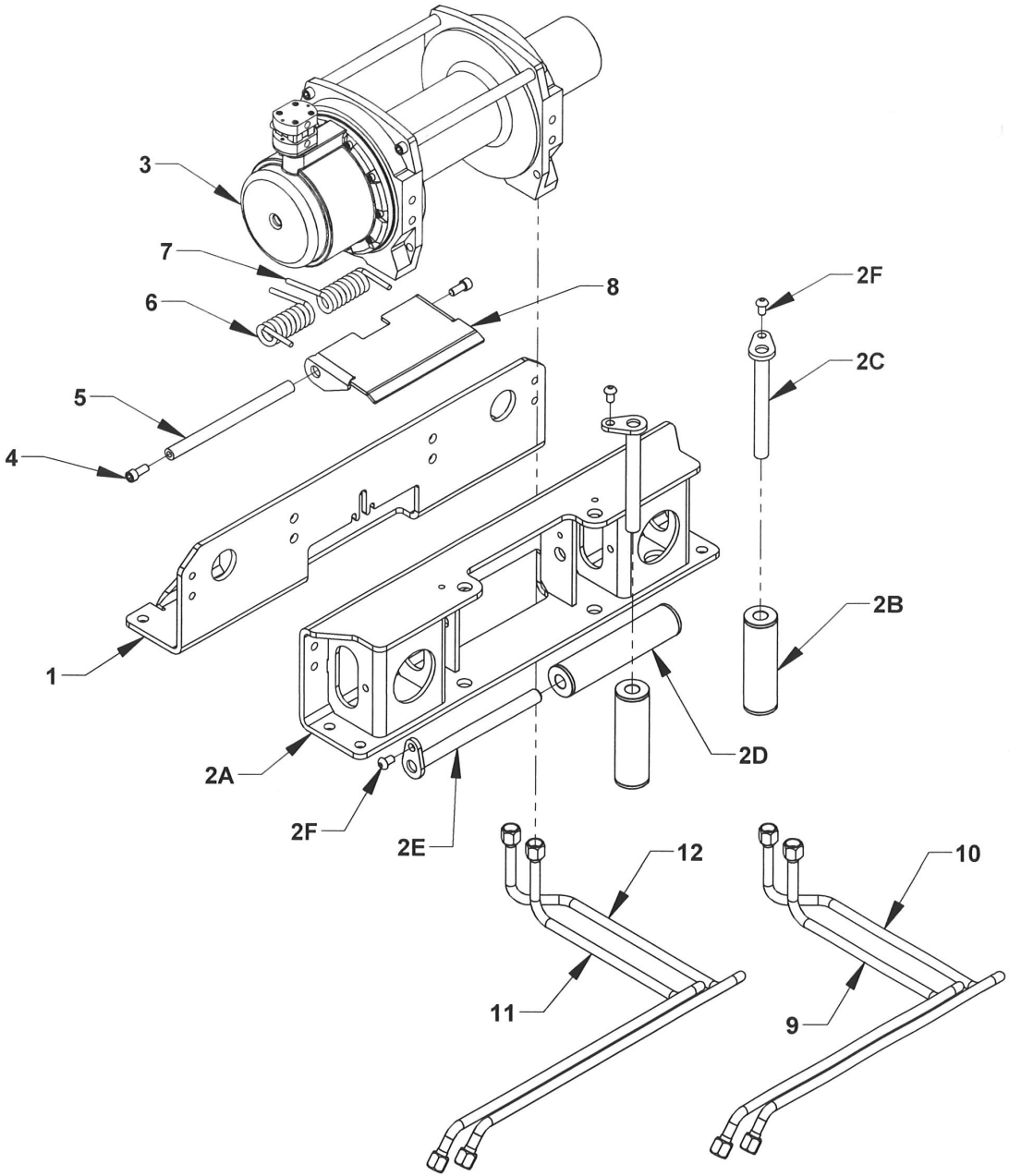

WARN WINCH - AIR FREE SPOOL

REF. NO.	NO. REQ'D	PART NUMBER	DESCRIPTION
1	1	0809644	MTG FRAME WELDMENT - FRONT
2	1	0940240	WARN MTG FRAME REAR ASSEMBLY
2A	1	0809639	MTG FRAME WLDMNT - ROLLER GUIDE REAR
2B	2	0809640	ROLLER GUIDE BUSHING 1.75 x 5.625
2C	2	0809641	ROLLER GUIDE KEEPER PIN
2D	1	A9R281	ROLLER GUIDE BUSHING 1.75 x 7.875
2E	1	A902095	ROLLER GUIDE KEEPER PIN
2F	3	0403161	BOLT, BHCS 3/8-16 UNC x 5/8
3	1	0308936-0908AA	WINCH 9K, 8 IN. DRUM AIR SHIFT
	1	0308936-1208AA	WINCH 12K, 8 IN. DRUM AIR SHIFT
	1	0308936-1508AA	WINCH 15K, 8 IN. DRUM AIR SHIFT
4	2	0403109	BOLT, SHCS 3/8-16 UNC x 7/8
5	1	0751337	TENSION PLATE PIVOT ROD
6	1	0308935R	TENSION SPRING
7	1	0308935L	TENSION SPRING
8	1	0751268	TENSION PLATES
9	1	0752167-W	S10-16 CNV WARN FLUID TUBE-SHORT
10	1	0752168-W	S10-16 CNV WARN FLUID TUBE-LONG
11	1	0751974-W	S12-16 LCG WARN FLUID TUBE-SHORT
12	1	0751975-W	S12-16 LCG WARN FLUID TUBE-LONG

OPTIONAL DASHBOARD PANEL

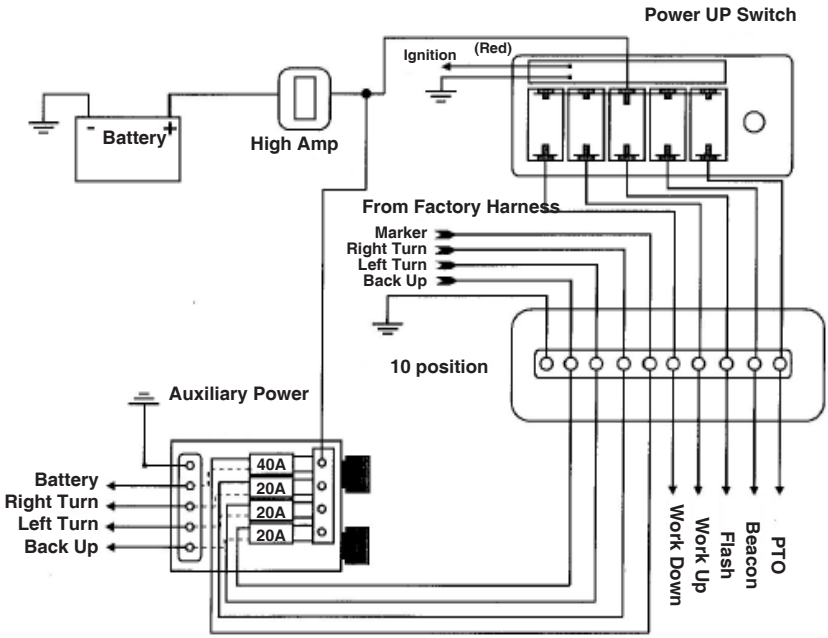

LIGHT KIT

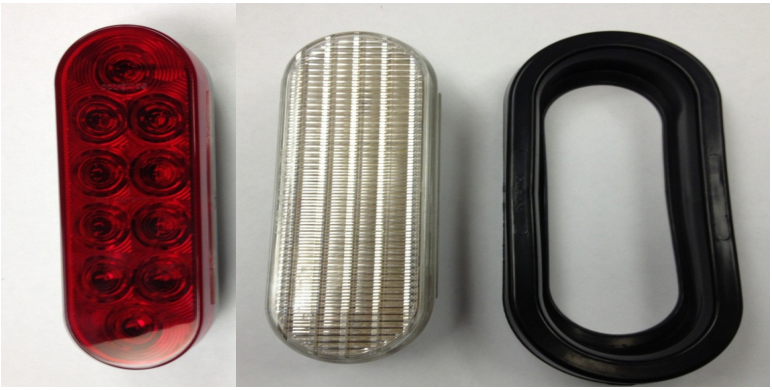

REF. NO.	PART NUMBER	DESCRIPTION
1	0311498	LIGHT 6" OVAL RED LED - STOP/TURN
2	0311500	LIGHT 6" OVAL REVERSE LED
3	3011503	LIGHT 6" GROMMET

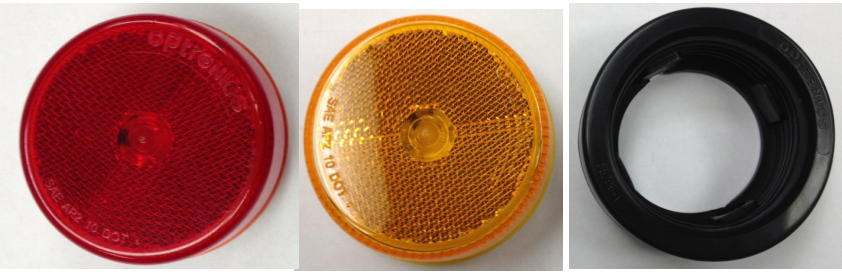

REF. NO.	PART NUMBER	DESCRIPTION
1	0311512	LIGHT 2.5" RED REFLEX LED (MCL59RB)
2	0311513	LIGHT 2.5" AMBER REFLEX LED (MCL59AB)
3	0311516	LIGHT 2.5" GROMMET

LIGHT KIT

REF. NO.	PART NUMBER	DESCRIPTION
1	0311514	LIGHT 2.5" ROUND CLEAR/RED LED MARKER LIGHT
2	0311515	LIGHT 2.5" ROUND CLEAR/AMBER LED MARKER LIGHT
3	3011516	LIGHT 2.5" GROMMET

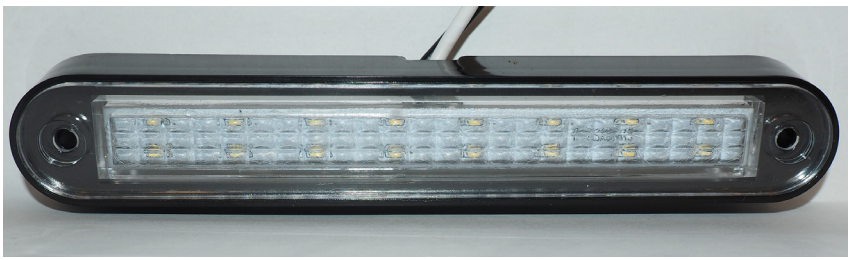

REF. NO.	PART NUMBER	DESCRIPTION
1	0320162	6 IN. CONTROL STATION LED LIGHT

LIGHT KIT & PRESSURE GAUGE

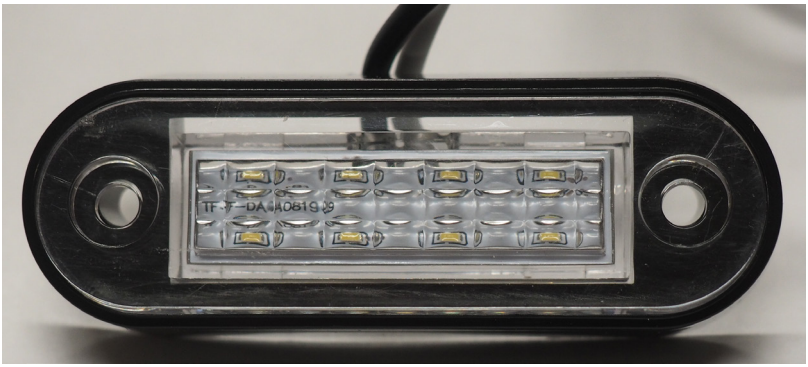

REF. NO.	PART NUMBER	DESCRIPTION
1	0320161	3 IN. CONTROL STATION LED LIGHT

REF. NO.	PART NUMBER	DESCRIPTION
1	0320157	2 IN. HYDRAULIC PRESSURE GAUGE

LIGHT KIT

REF. NO.	PART NUMBER	DESCRIPTION
1	0311519	RED 3/4 LED ICC LIGHT

REF. NO.	PART NUMBER	DESCRIPTION
1	0311520	RED 3/4 LED LIGHT

LIGHT KIT

REF. NO.	PART NUMBER	DESCRIPTION
1	0311521	AMBER 3/4 ROUND LED LIGHT

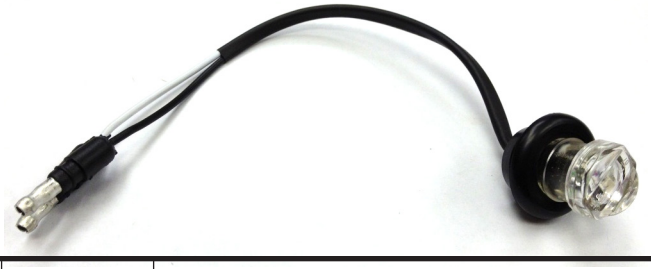

REF. NO.	PART NUMBER	DESCRIPTION
1	0311522	CLEAR/RED 3/4 ROUND LED LIGHT

REF. NO.	PART NUMBER	DESCRIPTION
1	0311523	CLEAR/AMBER 3/4 ROUND LED LIGHT

LIGHT KIT

REF. NO.	PART NUMBER	DESCRIPTION
1	0308359	MARKER LIGHT RED REFLEX LED

REF. NO.	PART NUMBER	DESCRIPTION
1	0308360	MARKER LIGHT AMBER REFLEX LED

LIGHT KIT

REF. NO.	PART NUMBER	DESCRIPTION
1	0308969R	MARKER LIGHT RED REFLEX LED

REF. NO.	PART NUMBER	DESCRIPTION
1	0308969A	MARKER LIGHT AMBER REFLEX LED

LIGHT KIT

REF. NO.	PART NUMBER	DESCRIPTION
1	0312578	MILLENNIUM MARKER LIGHT CLEAR/AMBER

REF. NO.	PART NUMBER	DESCRIPTION
1	0312579	MILLENNIUM MARKER LIGHT CLEAR/RED

LIGHT KIT

REF. NO.	PART NUMBER	DESCRIPTION
1	0308491	REFLECTOR - AMBER

REF. NO.	PART NUMBER	DESCRIPTION
1	0308490	REFLECTOR - RED

LIGHT KIT

REF. NO.	PART NUMBER	DESCRIPTION
1	0311510	RECTANGULAR REFLEX BACK UP
1	0311511	RECTANGULAR REFLEX BACK UP GROMMET

MANUAL SLIDEWINDER - 315200 (SHORT TRACK)

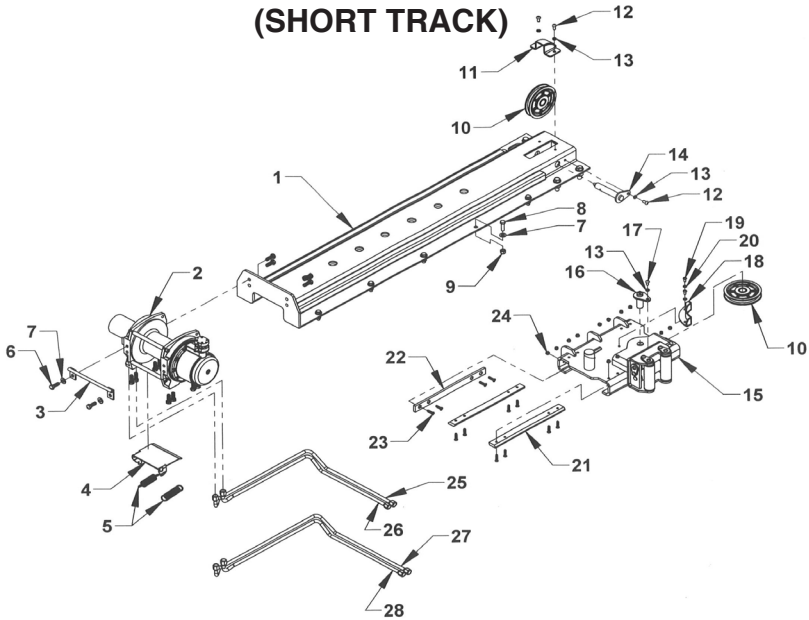

REF	QTY	PART #	DESCRIPTION
1	1	315210	SLIDE TRACK - SHORT
2	1	711096	SERIES 9 WINCH - 6.5 INCH DRUM
	1	711126	SERIES 12 WINCH - 6.5 INCH DRUM
3	1	7189065	AIR LINE TRANSFER BRACKET
4	1	A90065	CABLE TENSIONER PLATE
5	2	A9018S	TENSION SPRING 40 LB/INCH
6	14	0400733	BOLT M12-1.75 MM x 35 HHC 8.8
7	20	0403040	FLAT WASHER 1/2 SAE
8	14	0400181	BOLT 1/2-13 UNC x 1-1/2 HHC GR5
9	14	0403100	NUT NYLOCK 1/2-13 UNC
10	2	69125	6 x 1 PULLEY
11	1	315225	CABLE GUIDE
12	4	0400878	BOLT 3/8-16 UNJC x 3/4 BHC
13	5	0400482	LOCK WASHER 3/8
14	1	315230	PULLEY PIN
15	1	315310	SLIDE CARRIAGE
16	1	315330	PULLEY PIN
17	1	0403161	BOLT 3/8 -16 UNC x 5/8 BHC
18	1	315325	CABLE GUIDE
19	2	0403158	BOLT 5/16 -18 UNC x 5/8 BHC
20	2	0400464	LOCK WASHER 5/16
21	1	315320	SLIDE PAD
22	2	315323	FRONT SLIDE PAD
23	12	04000321	SCREW 5/16-18 UNC x 1-1/4 FH TORX
24	12	0400382	NUT NYLOCK 5/16-18 UNC
25	1	383SW0944	ST SLIDEWINDER FLUID TUBE-LONG
26	1	383SW0940	ST SLIDEWINDER FLUID TUBE-SHORT
27	1	07005356	G2 SHORT TRACK SLIDEWINDER FLUID TUBE-LONG
28	1	07005355	G2 SHORT TRACK SLIDEWINDER FLUID TUBE-SHORT

MANUAL SLIDEWINDER - 315204 (LONG TRACK)

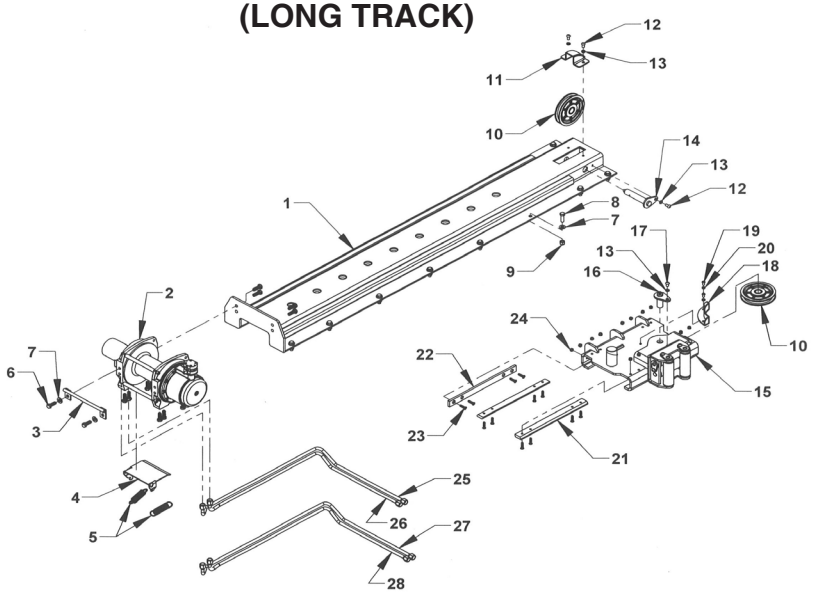

REF	QTY	PART #	DESCRIPTION
1	1	315214	SLIDE TRACK - LONG
2	1	711096	SERIES 9 WINCH - 6.5 INCH DRUM
	1	711126	SERIES 12 WINCH - 6.5 INCH DRUM
3	1	7189065	AIR LINE TRANSFER BRACKET
4	1	A90065	CABLE TENSIONER PLATE
5	2	A9018S	TENSION SPRING 40 LB/INCH
6	14	0400733	BOLT M12-1.75 MM x 35 HHC 8.8
7	22	0403040	FLAT WASHER 1/2 SAE
8	16	0400181	BOLT 1/2-13 UNC x 1-1/2 HHC GR5
9	16	0403100	NUT NYLOCK 1/2-13 UNC
10	2	69125	6 x 1 PULLEY
11	1	315225	CABLE GUIDE
12	4	0400878	BOLT 3/8-16 UNC x 3/4 BHC
13	5	0400482	LOCK WASHER 3/8
14	1	315230	PULLEY PIN
15	1	315310	SLIDE CARRIAGE
16	1	315330	PULLEY PIN
17	1	0403161	BOLT 3/8 -16 UNC x 5/8 BHC
18	1	315325	CABLE GUIDE
19	2	0403158	BOLT 5/16 -18 UNC x 5/8 BHC
20	2	0400464	LOCK WASHER 5/16
21	1	315320	SLIDE PAD
22	2	315323	FRONT SLIDE PAD
23	12	04000321	SCREW 5/16-18 UNC x 1-1/4 FH TORX
24	12	0400382	NUT NYLOCK 5/16-18 UNC
25	1	0751932	G2 LONG TRACK LCG FLUID TUBE-LONG
26	1	0751933	G2 LONG TRACK LCG FLUID TUBE-SHORT
27	1	0752598	G2 LONG TRACK CNV FLUID TUBE-LONG
28	1	0752599	G2 LONG TRACK CNV FLUID TUBE-SHORT

Section V - PARTS

33" ALUMINUM TOOLBOX - 377000

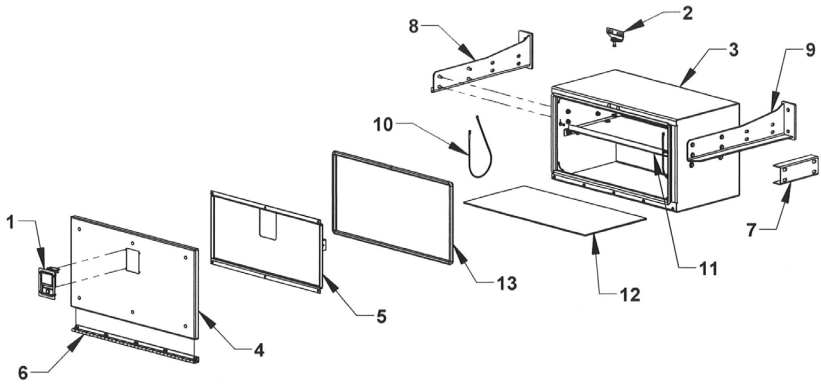

NOTE: 377000 DOES NOT INCLUDE MOUNTING BRACKETS

REF	PART #	QTY	DESCRIPTION
1	54658	1	ROTARY PADDLE LATCH
	54657	1	GASKET FOR PADDLE LATCH
	81111	4	#8-32 x 1/2 STAINLESS ONE WAY SCREW
	83111	4	#8-32 STAINLESS KEPT NUT
2	376182	1	STRIKER PIN MOUNTING PLATE
	54659	1	STRIKER PIN
	0403072	2	STAINLESS CARRIAGE BOLT 5/16-18 x 3/4
	0400465	4	FLAT WASHER 5/16
	0400464	2	LOCK WASHER 5/16
	0403151	2	NUT 5/16-18
	0400382	1	NYLON LOCK NUT 5/16-18
3	377100W	1	BOX WELDMENT
4	37741	1	DOOR WELDMENT
	37740	1	DOOR ASSEMBLY
	81100	6	STAINLESS CARRIAGE BOLT 1/4-20 x 3/4
	0400367	6	NYLON LOCK NUT 1/4-20
5	37744	1	DOOR REINFORCEMENT
6	37735	1	HINGE
	811014	2	SS SOCKET BUTTON HEAD BOLT 1/4-20 x 7/8
	811012	3	SS SOCKET BUTTON HEAD BOLT 1/4-20 x 3/4
	811010	5	SS SOCKET BUTTON HEAD BOLT 1/4-20 x 5/8
	0400367	10	NYLON LOCK NUT 1/4-20
7	37760	1	TANDEM BOX SPACER CHANNEL (OPTIONAL)
8	37855R	1	TANK AND TOOLBOX MTG BRACKET-RH
9	37855L	1	TANK AND TOOLBOX MTG BRACKET-LH
10	5A221	2	LANYARD-21 INCH
11	37770	1	SHELF
12	03002300	1	TOOLBOX MAT 33"
13	18151S	8 FT	TRIM SEAL - 3/8 WITH 5/8 BULB - 96 IN.

Section V - PARTS
49" ALUMINUM TOOLBOX - 378000

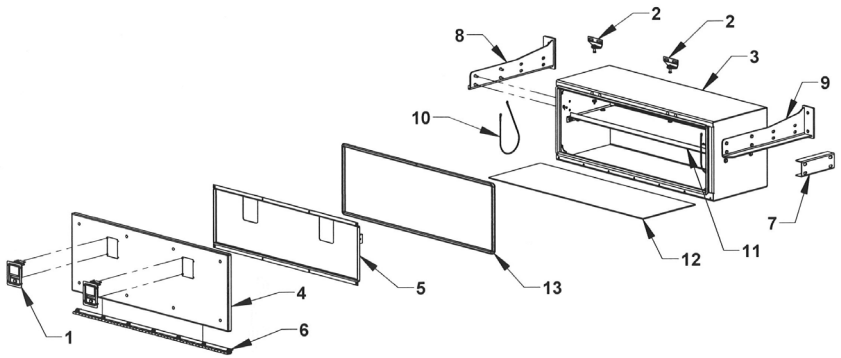

NOTE: 378000 DOES NOT INCLUDE MOUNTING BRACKETS

REF	PART #	QTY	DESCRIPTION
1	54658	2	ROTARY PADDLE LATCH
	54657	2	GASKET FOR PADDLE LATCH
	81111	8	#8-32 x 1/2 STAINLESS ONE WAY SCREW
	83111	8	#8-32 STAINLESS KEPT NUT
2	376182	2	STRIKER PIN MOUNTING PLATE
	54659	2	STRIKER PIN
	0403072	4	STAINLESS CARRIAGE BOLT 5/16-18 x 3/4
	0400465	8	FLAT WASHER 5/16
	0400464	4	LOCK WASHER 5/16
	0403151	4	NUT 5/16-18
	0400382	2	NYLON LOCK NUT 5/16-18
3	378100W	1	BOX WELDMENT
4	37841	1	DOOR WELDMENT
	37840	1	DOOR ASSEMBLY
	81100	8	STAINLESS CARRIAGE BOLT 1/4-20 x 3/4
	0400367	8	NYLON LOCK NUT 1/4-20
5	37844	1	DOOR REINFORCEMENT
6	37835	1	HINGE
	811014	2	SS SOCKET BUTTON HEAD BOLT 1/4-20 x 7/8
	811012	5	SS SOCKET BUTTON HEAD BOLT 1/4-20 x 3/4
	811010	7	SS SOCKET BUTTON HEAD BOLT 1/4-20 x 5/8
	0400367	14	NYLON LOCK NUT 1/4-20
7	37760	1	TANDEM BOX SPACER CHANNEL (OPTIONAL)
8	37855R	1	TANK AND TOOLBOX MTG BRACKET-RH
9	37855L	1	TANK AND TOOLBOX MTG BRACKET-LH
10	5A221	2	LANYARD-21 INCH
11	37670	1	SHELF
12	03002301	1	TOOLBOX MAT 49"
13	18151S	11 FT.	TRIM SEAL - 3/8 WITH 5/8 BULB - 132 IN.

Section V - PARTS

65" ALUMINUM TOOLBOX - 379000

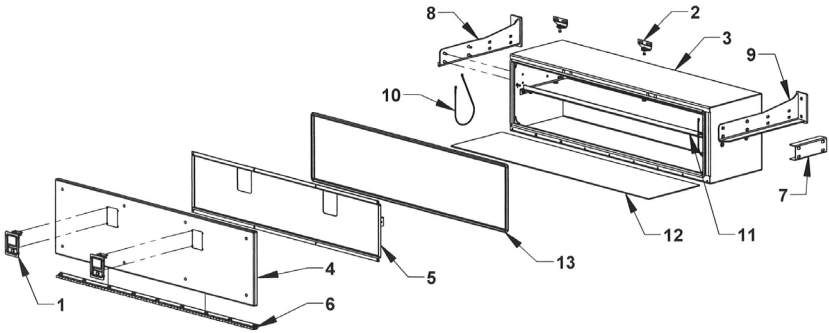

NOTE: 379000 DOES NOT INCLUDE MOUNTING BRACKETS

REF	PART #	QTY	DESCRIPTION
1	54658	2	ROTARY PADDLE LATCH
	54657	2	GASKET FOR PADDLE LATCH
	81111	8	#8-32 x 1/2 STAINLESS ONE WAY SCREW
	83111	8	#8-32 STAINLESS KEPT NUT
2	376182	2	STRIKER PIN MOUNTING PLATE
	54659	2	STRIKER PIN
	0403072	4	STAINLESS CARRIAGE BOLT 5/16-18 x 3/4
	0400465	8	FLAT WASHER 5/16
	0400464	4	LOCK WASHER 5/16
	0403151	4	NUT 5/16-18
	0400382	2	NYLON LOCK NUT 5/16-18
3	379100W	1	BOX WELDMENT
4	37941	1	DOOR WELDMENT
	37940	1	DOOR ASSEMBLY
	81100	8	STAINLESS CARRIAGE BOLT 1/4-20 x 3/4
	0400367	8	NYLON LOCK NUT 1/4-20
5	37944	1	DOOR REINFORCEMENT
6	37935	1	HINGE
	811014	2	SS SOCKET BUTTON HEAD BOLT 1/4-20 x 7/8
	811012	7	SS SOCKET BUTTON HEAD BOLT 1/4-20 x 3/4
	811010	7	SS SOCKET BUTTON HEAD BOLT 1/4-20 x 5/8
	0400367	18	NYLON LOCK NUT 1/4-20
7	37760	1	TANDEM BOX SPACER CHANNEL (OPTIONAL)
8	37855R	1	TANK AND TOOLBOX MTG BRACKET-RH
9	37855L	1	TANK AND TOOLBOX MTG BRACKET-LH
10	5A221	2	LANYARD-21 INCH
11	37970	1	SHELF
12	03002302	1	TOOLBOX MAT 65"
13	18151S	13.5 FT	TRIM SEAL - 3/8 WITH 5/8 BULB - 162 IN.

36" STEEL TOOLBOX LCG - 174016021

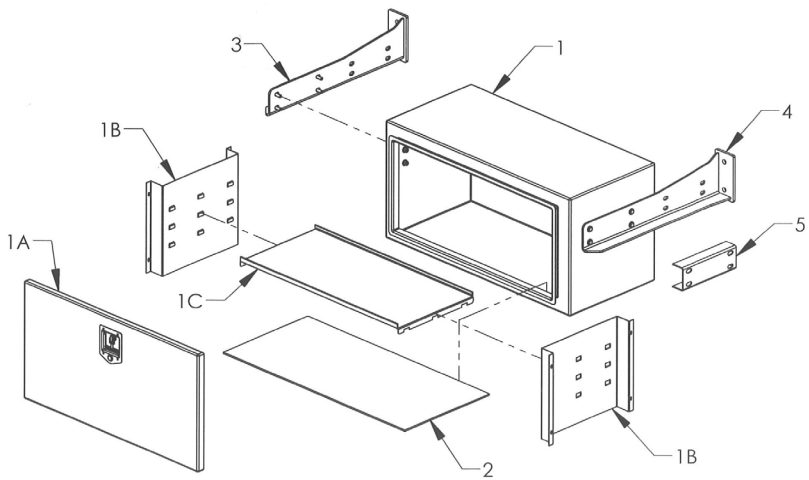

NOTE: 174016021 DOES NOT INCLUDE MOUNTING BRACKETS

REF	PART #	QTY	DESCRIPTION
1	174016021	1	STEEL TOOLBOX 36" WITH STAINLESS STEEL DOOR
1A	174016021D	1	SS DOOR ASSEMBLY
1B	07002918	2	STEEL TOOLBOX INSIDE PANEL
1C	07002919-36	1	STEEL TOOLBOX 36" SHELF
2	0308801	1	TOOLBOX MAT 36"
3	37855R	1	TOOLBOX AND OIL TANK MTG BRACKET-RH
4	37855L	1	TOOLBOX AND OIL TANK MTG BRACKET-LH
5	37760	1	TANDEM BOX SPACER CHANNEL (OPT)

48" STEEL TOOLBOX LCG - 174016022

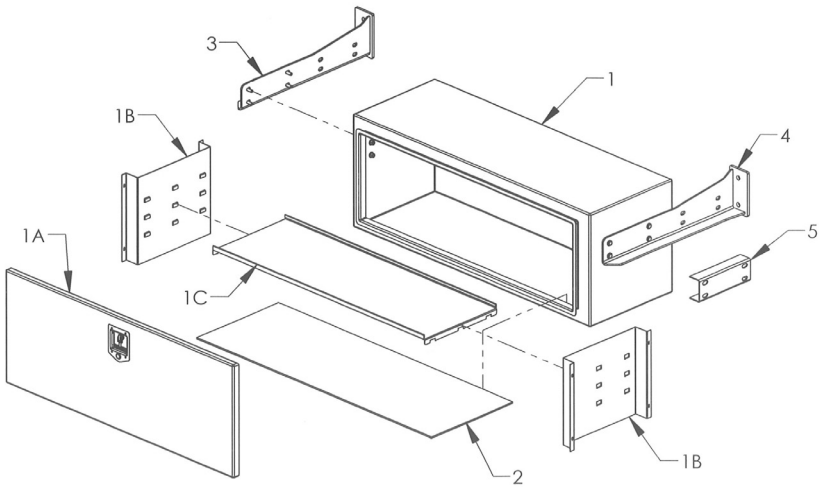

NOTE: 174016022 DOES NOT INCLUDE MOUNTING BRACKETS

REF	PART #	QTY	DESCRIPTION
1	174016022	1	STEEL TOOLBOX 48" WITH STAINLESS STEEL DOOR
1A	174016022D	1	SS DOOR ASSEMBLY
1B	07002918	2	STEEL TOOLBOX INSIDE PANEL
1C	07002919-48	1	STEEL TOOLBOX 48" SHELF
2	0308758	1	TOOLBOX MAT 48"
3	37855R	1	TOOLBOX AND OIL TANK MTG BRACKET-RH
4	37855L	1	TOOLBOX AND OIL TANK MTG BRACKET-LH
5	37760	1	TANDEM BOX SPACER CHANNEL (OPT)

60" STEEL TOOLBOX LCG - 174016023

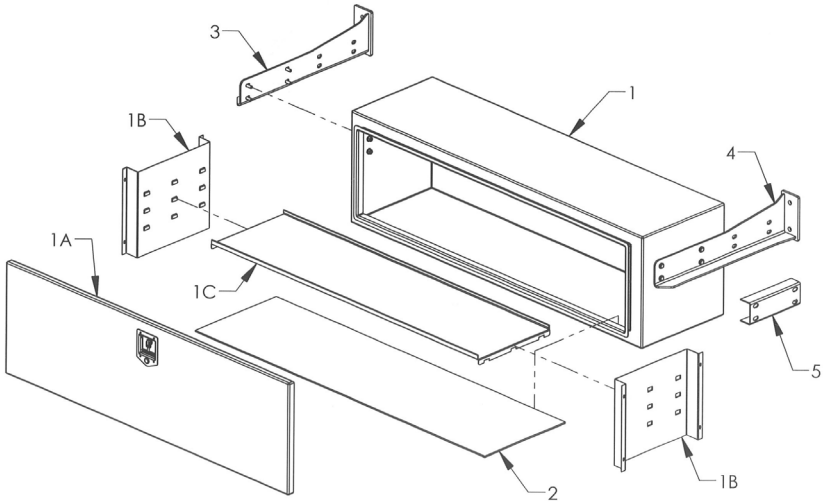

NOTE: 174016023 DOES NOT INCLUDE MOUNTING BRACKETS

REF	PART #	QTY	DESCRIPTION
1	174016023	1	STEEL TOOLBOX 60" WITH STAINLESS STEEL DOOR
1A	174016023D	1	SS DOOR ASSEMBLY
1B	07002918	2	STEEL TOOLBOX INSIDE PANEL
1C	07002919-60	1	STEEL TOOLBOX 60" SHELF
2	0308837	1	TOOLBOX MAT 60"
3	37855R	1	TOOLBOX AND OIL TANK MTG BRACKET-RH
4	37855L	1	TOOLBOX AND OIL TANK MTG BRACKET-LH
5	37760	1	TANDEM BOX SPACER CHANNEL (OPT)

BED MOUNTED CAB PROTECTOR

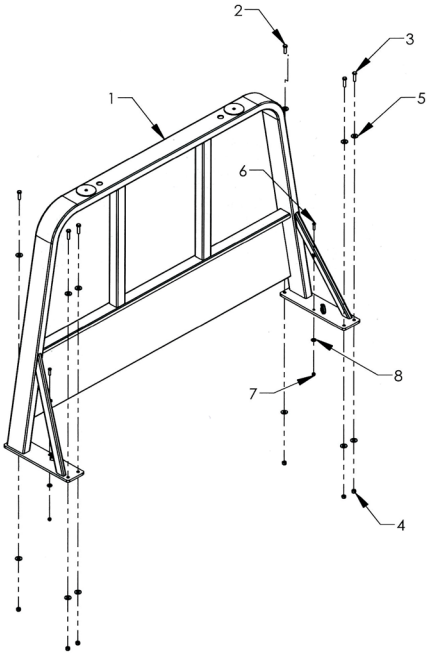

REF. NO.	NO. REQ'D	PART NUMBER	DESCRIPTION
1	1	0809558-38	2 x 5 PERIMETER TUBE CAB PROTECTOR - 38"
		0809558-42	2 x 5 PERIMETER TUBE CAB PROTECTOR - 42"
		0809558-45	2 x 5 PERIMETER TUBE CAB PROTECTOR - 45"
		0809558-48	2 x 5 PERIMETER TUBE CAB PROTECTOR - 48"
		0809558-50	2 x 5 PERIMETER TUBE CAB PROTECTOR - 50"
		0809558-52	2 x 5 PERIMETER TUBE CAB PROTECTOR - 52"
		0809558-54	2 x 5 PERIMETER TUBE CAB PROTECTOR - 54"
		0809558-57	2 x 5 PERIMETER TUBE CAB PROTECTOR - 57"
		0809558-60	2 x 5 PERIMETER TUBE CAB PROTECTOR - 60"
		0809558-64	2 x 5 PERIMETER TUBE CAB PROTECTOR - 64"
2	2	0400211	1/2 -13 x 1-3/4 HHCS GR 5 Z
3	4	0400188	1/2 -13 x 2 HHCS
4	6	0400408	1/2 -13 NYLON LOCK NUT ZINC
5	12	0400492	1/2 USS FLAT WASHER ZINC
6	2	0400132	3/8 -16 x 1-1/2 HHCS GR 5 Z
7	2	0400392	3/8 -16 NYLON LOCK NUT ZINC
8	4	0400480	3/8 - USS FLAT WASHER ZINC

FRAME MOUNTED PYLON - 0940455-102
LCG BASE ASSEMBLY

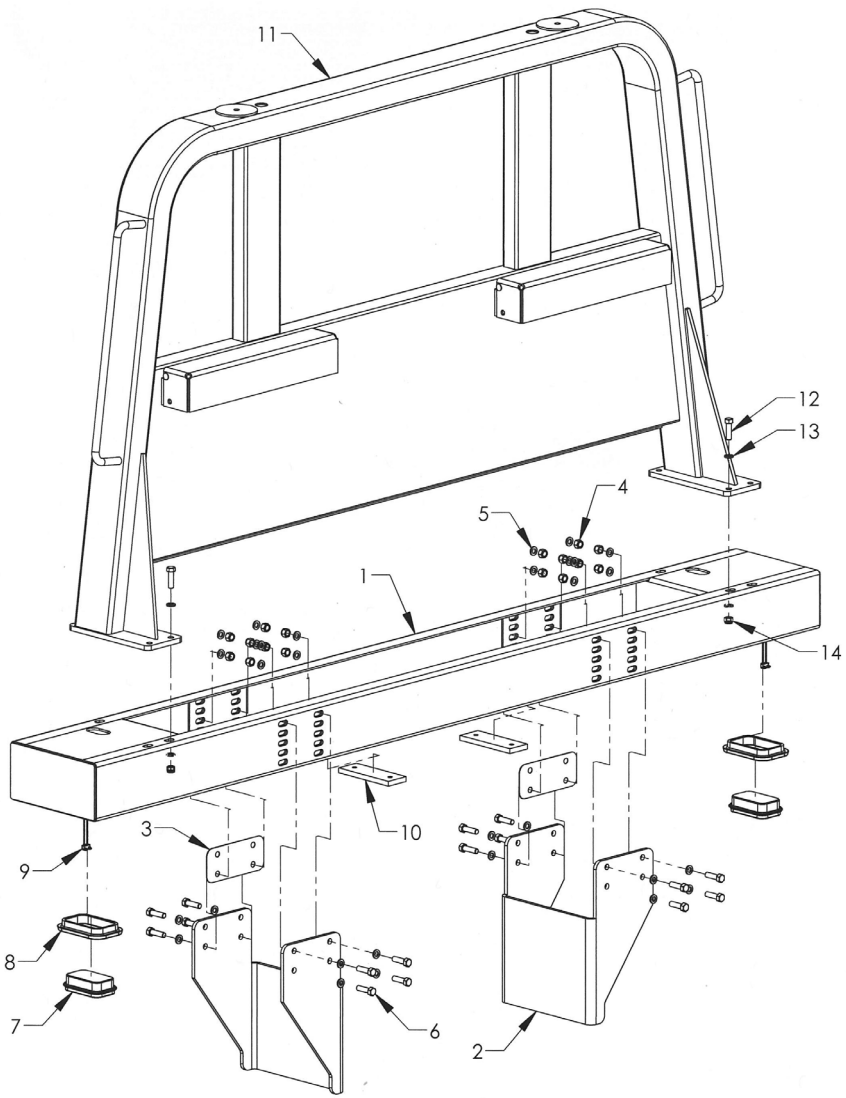

GRAB HANDLES AND CHAIN HANGERS ARE OPTIONAL PYLON EQUIPMENT

FRAME MOUNTED PYLON - 0940455-102

REF. NO.	NO. REQ'D	PART NUMBER	DESCRIPTION
1	1	0811186-102	FMP CONVENTIONAL CHAIN TRAY BASE - 102
2	2	0752751	PYLON MTG BRACKET, FMP LCG
3	2	0752730	SHIM, 16 GAGE, FMP BASE
4	16	0400408	NYLON LOCK NUT 1/2-13 UNC
5	32	0403040	FLAT WASHER 1/2 SAE ZP
6	16	0403058	BOLT HHCS 1/2-13 x 1-3/4 GR8 PLAIN
7	2	0311511	CARRIER TAIL LIGHT GROMMET (OPTIONAL)
8	2	0311509	LIGHT RECEPTACLE REVERSE LED (OPTIONAL)
9	2	0311506	LIGHT PIGTAIL 2 PRONG 18 IN. LEAD
10	2	354614-050	FMP 1/2 IN. SPACER SERIES 12 LCG
		354614-100	FMP 1 IN. SPACER SERIES 16 LCG
		354614-150	FMP 1-1/2 IN. SPACER SERIES 20 LCG
		354614-075/175	FMP 2-1/2 IN. SPACER SERIES 20 LCG WOOD
		354614-050/175	FMP 2-1/4 IN. SPACER SERIES 30 LCG
		354614-150/175	FMP 3-1/4 IN. SPACER SERIES 30 LCG WOOD
11	1	0811185-48	FMP 12 PYLON-48
		0811185-50	FMP 12 PYLON-50
		0811185-52	FMP 12 PYLON-52
		0811185-56	FMP 12 PYLON-56
		0811185-60	FMP 12 PYLON-60
		0811185-63	FMP 12 PYLON-63
		0811185-68	FMP 12 PYLON-68
12	6	0403058	BOLT HHCS 1/2-13 x 1-3/4 GR8 PLAIN
13	12	0403040	FLAT WASHER 1/2 SAE ZP
14	6	0400408	NYLON LOCK NUT 1/2-13 UNC

ADJUSTABLE CAB PROTECTOR 09012828-XX (FRAME MOUNTED 5-INCH BASE)

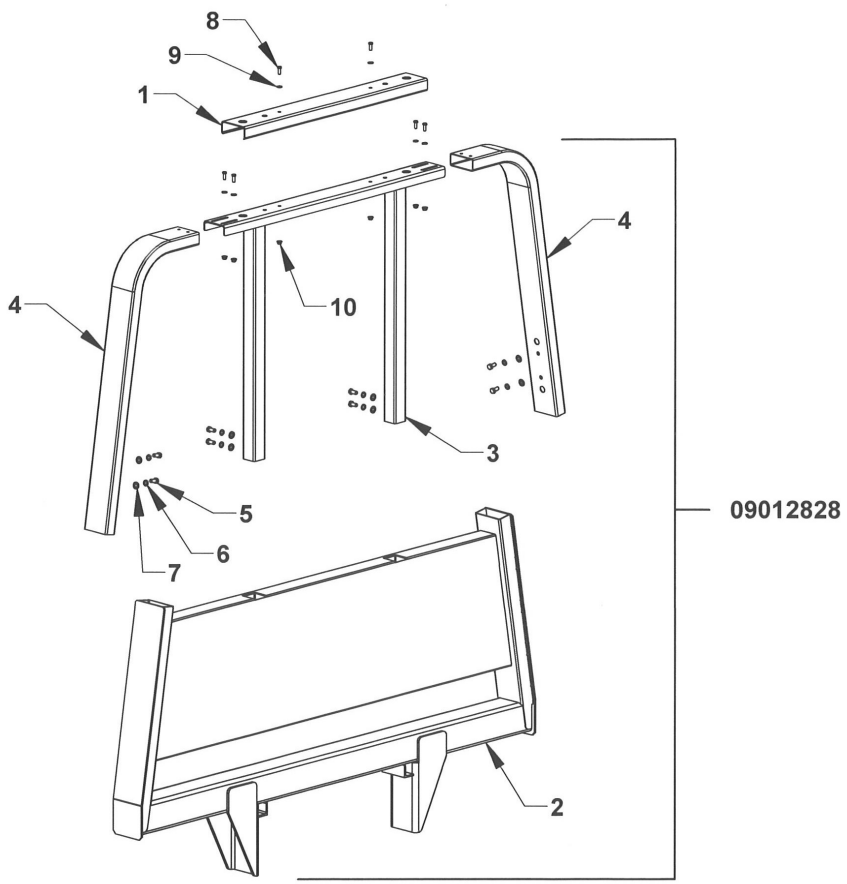

REF. NO.	NO. REQ'D	PART NUMBER	DESCRIPTION
1	1	07011335-46	CAB PROTECTOR TRIM CHANNEL
2	1	08011111	ADJUSTABLE CAB PROTECTR BASE FMP 5" LCG
3	1	08007570	CAB PROTECTOR CENTER SUPPORT
4	2	08007571	ADJUSTABLE SIDE TUBE
5	8	0400176	BOLT HHCS 1/2-13 UNC x 1 GR5
6	8	0400491	LOCK WASHER 1/2 ZP
7	8	0403128	FLAT WASHER 1/2 ZP
8	6	0400126	BOLT HHCS 3/8-16 UNC x 1 GR5
9	6	0400480	FLAT WASHER 3/8 ZP
10	6	04002907	NUT, FLANGED NYLOK 3/8-16 UNC ZP

ADJUSTABLE CAB PROTECTOR 09012829-XX (FRAME MOUNTED 12-INCH BASE)

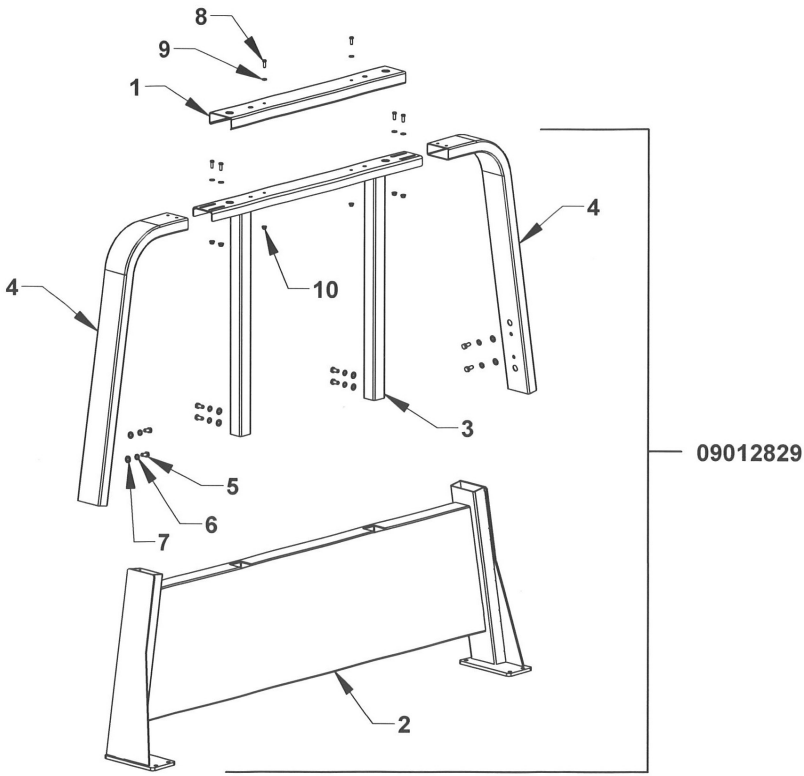

REF. NO.	NO. REQ'D	PART NUMBER	DESCRIPTION
1	1	07011335-46	CAB PROTECTOR TRIM CHANNEL
2	1	08011110	ADJUSTABLE CAB PROTECTR BASE FMP 12"
3	1	08007570	CAB PROTECTOR CENTER SUPPORT
4	2	08007571	ADJUSTABLE SIDE TUBE
5	8	0400176	BOLT HHCS 1/2-13 UNC x 1 GR5
6	8	0400491	LOCK WASHER 1/2 ZP
7	8	0403128	FLAT WASHER 1/2 ZP
8	6	0400126	BOLT HHCS 3/8-16 UNC x 1 GR5
9	6	0400480	FLAT WASHER 3/8 ZP
10	6	04002907	NUT, FLANGED NYLOK 3/8-16 UNC ZP

ADJUSTABLE CAB PROTECTOR 09008330-XX (BED MOUNTED)

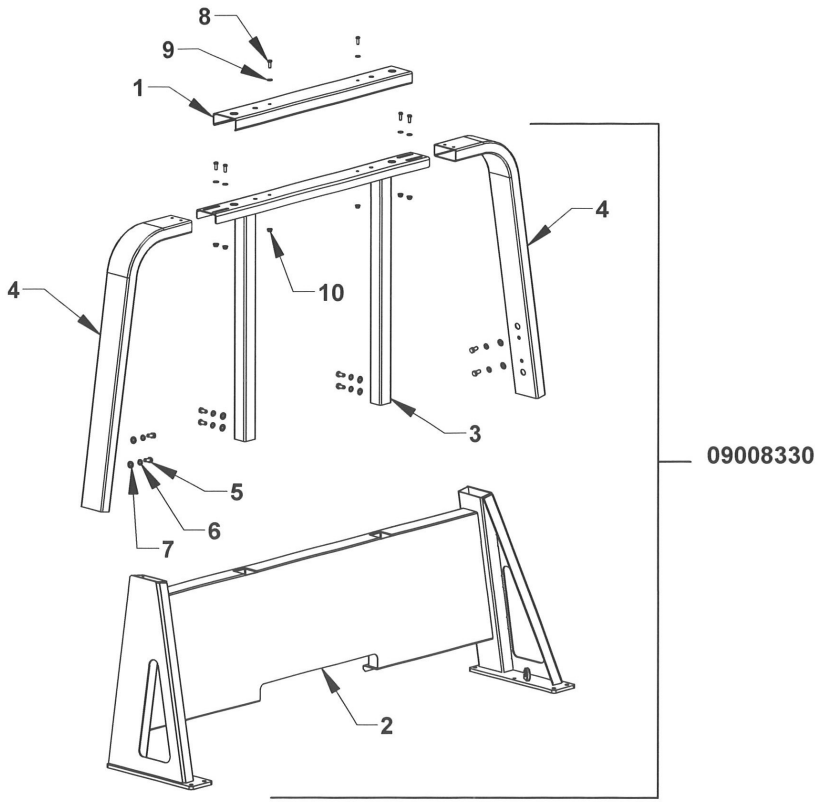

REF. NO.	NO. REQ'D	PART NUMBER	DESCRIPTION
1	1	07011335-46	CAB PROTECTOR TRIM CHANNEL
2	1	08017569	ADJUSTABLE CAB PROTECTR BASE
3	1	08007570	CAB PROTECTOR CENTER SUPPORT
4	2	08007571	ADJUSTABLE SIDE TUBE
5	8	0400176	BOLT HHCS 1/2-13 UNC x 1 GR5
6	8	0400491	LOCK WASHER 1/2 ZP
7	8	0403128	FLAT WASHER 1/2 ZP
8	6	0400126	BOLT HHCS 3/8-16 UNC x 1 GR5
9	6	0400480	FLAT WASHER 3/8 ZP
10	6	04002907	NUT, FLANGED NYLOK 3/8-16 UNC ZP

BODY LOCK ASSEMBLY - 364220K

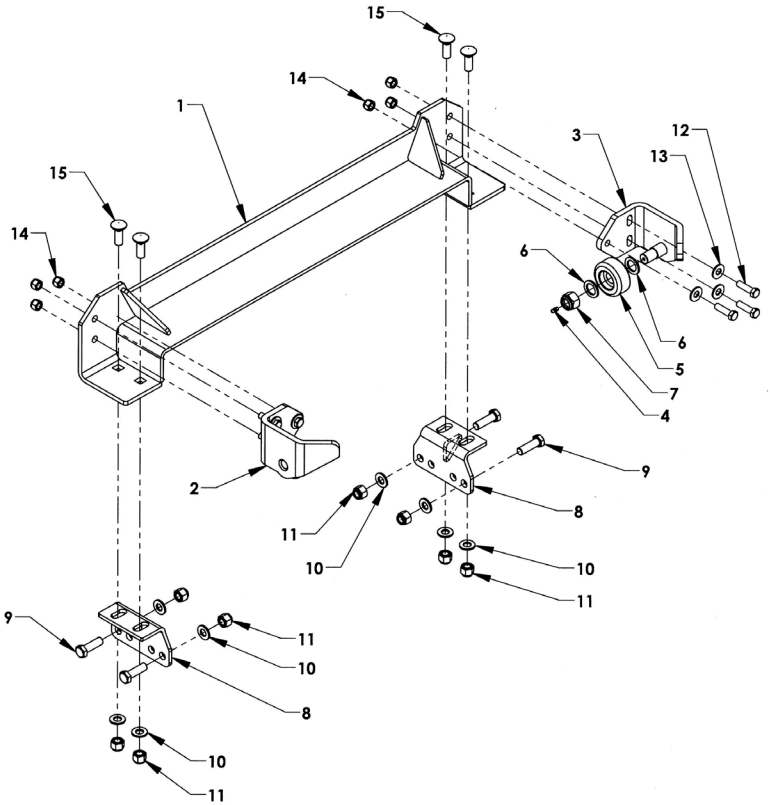

REF. NO.	NO. REQ'D	PART NUMBER	DESCRIPTION
1	1	364220	LCG BODY LOCK WELDMENT-SETBACK CAPABLE
2	1	36315L	BODY LOCK HOLD-DOWN - LH
3	1	36315R	BODY LOCK HOLD-DOWN - RH
4	2	0306382	GREASE FITTING 1/4-28
5	2	36310	ROLLER WHEEL
6	4	0400470	FLAT WASHER 1
7	2	04001225	NYLON LOCK NUT, 7/8-14 UNF
8	2	0809183	MOUNTING BRACKET
9	4	0400260	BOLT, 5/8-11 HHCS UNC x 2 GRADE 5
10	8	0400505	FLAT WASHER 5/8
11	8	0400421	NYLON LOCK NUT, 5/8-11 UNC
12	6	0400218	BOLT, HHCS 1/2-20 UNF x 1-1/4
13	6	0400492	FLAT WASHER, 1/2 IN.
14	6	0400413	NYLON LOCK NUT, 1/2-20 UNF
15	4	0403068	CARRIAGE BOLT 5/8-11 x 1-3/4

MUDFLAP COMPONENTS

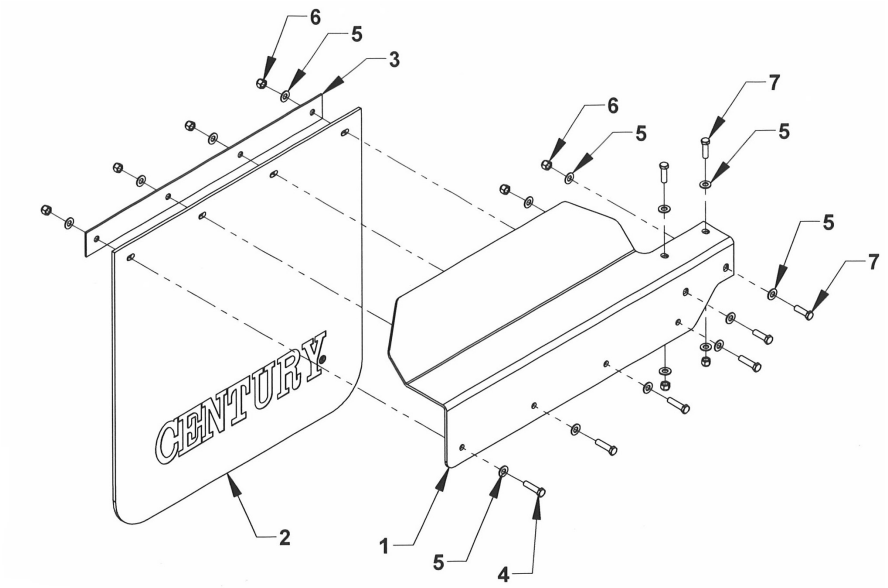

REF	QTY	PART NO.	DESCRIPTION
1	1	0751024L	MUDFLAP MOUNTING BRACKET (LH)
	1	0751024R	MUDFLAP MOUNTING BRACKET (RH)
2	1	0308419	MUDFLAP 24 x 24
3	1	0750340	MUDFLAP SUPPORT BAR
4	4	0400132	BOLT HHCS 3/8-16 UNC x 1-1/2 GR5
5	16	0400480	WASHER 3/8
6	8	0400392	3/8-16 NYLON LOCK NUT
7	4	0400122	BOLT HHCS 3/8-16 UNC x 1-1/.4 GR5

PINTLE ATTACHMENT GROUP

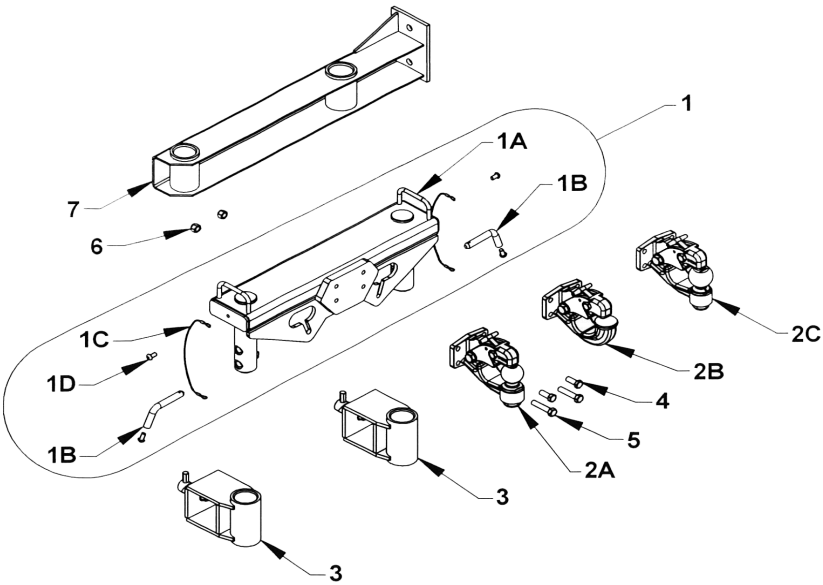

REF	PART NO.	QTY	DESCRIPTION
1	66370G	1	PINTLE ATTACHMENT
1A	66370	1	PINTLE ATTACHMENT WELDMENT
1B	66378	2	RETAINING PIN
1C	65292	2	LANYARD
1D	0403004	4	BOLT BHCS 3/8-16 x 3/4
2A	174017159	1	TOW BALL PINTLE HITCH - 2 IN. BALL
2B	174017156	1	PINTLE HOOK
2C	174017172	1	TOW BALL PINTLE HITCH - 2-5/16 IN. BALL
3	65460	1	FORK HOLDER - 3.5 x 3.5
4	04000005	2	BOLT HHCS 1/2-13 x 1.25 GRADE 8 SECURE WITH LOCTITE
5	0403056	2	BOLT HHCS 1/2-13 x 2-1/2 GRADE 8
6	0400408	2	NUT, NYLOK 1/2-13
7	66385	1	PINTLE ATTACHMENT STORAGE BRACKET

RECOVERY ROLLER GUIDE ATTACHMENT - 09018752 (FOR USE ON STEEL BEDS ONLY)

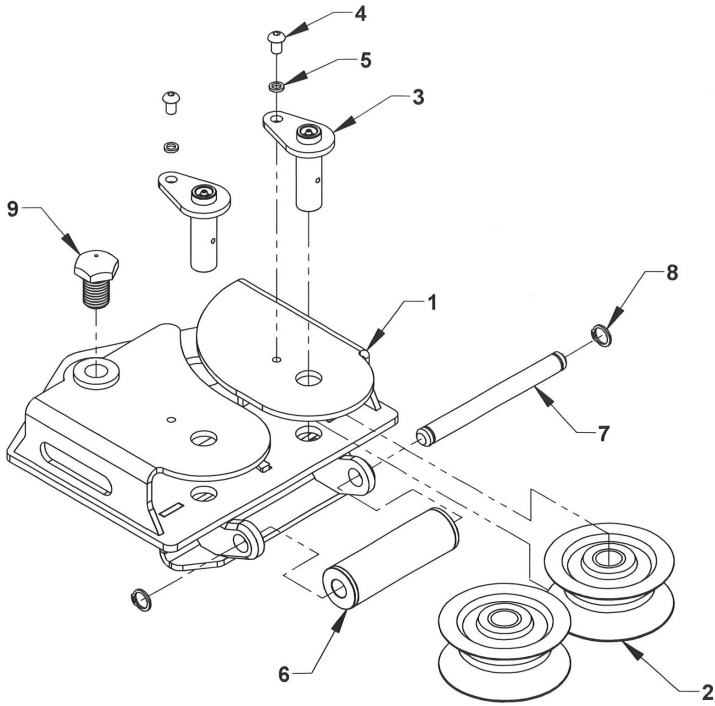

REF	PART NO.	QTY	DESCRIPTION
1	08016353	1	RECOVERY ROLLER GUIDE ATTACHMENT
2	09018753	2	PULLY, CABLE ROLLER GUIDE
3	08008889	2	KEEPER PIN, CABLE ROLLER GUIDE
4	0403161	2	BOLT, BHCS, 3/8-16 UNC x 5/8
5	0400464	2	LOCK WASHER 5/16
6	0809640	1	ROLLER ASSEMBLY 1.75 INCH DIAMETER
7	07013385	1	PIN, CABLE ROLLER GUIDE
8	03012289	2	RETAINING RING 3/4 SHAFT OD
9	07013420	1	BOLT, HHCS, 1-8 UNC x 1-1/2

LCG RETRACTABLE LADDER

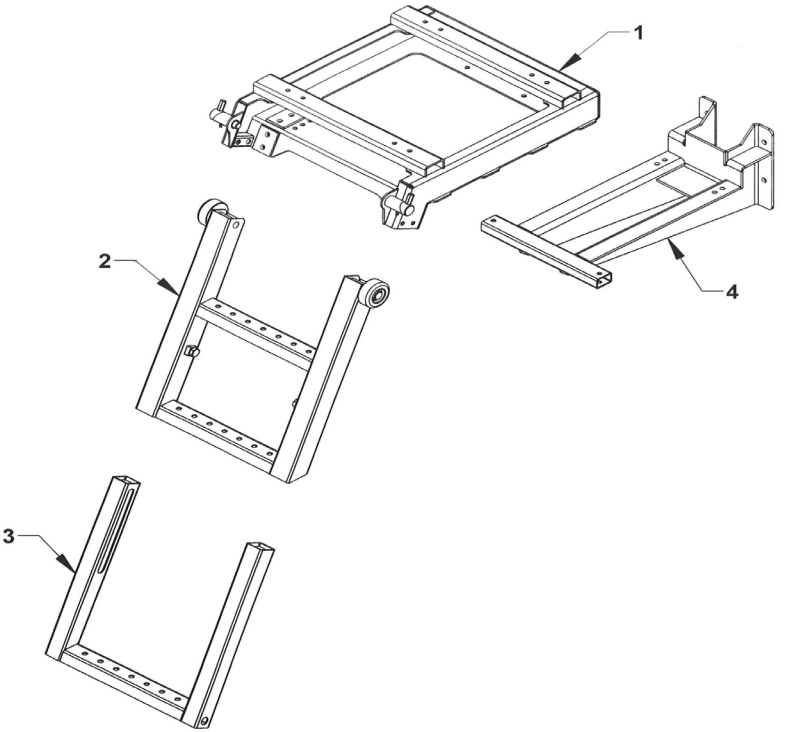

REF	PART #	DESCRIPTION	QTY
	391000	LADDER ASSEMBLY	1
1	391010	LADDER CARRIAGE	1
2	391020	UPPER RUNG ASSEMBLY	1
3	391030	LOWER RUNG ASSEMBLY	1
4	391050	FRAME MOUNTING BRACKET - OPTIONAL	1